Alderman Adella Gray
Ward 1 Position 1

Alderman Sarah Marsh
Ward 1 Position 2

Alderman Mark Kinion
Ward 2 Position 1

Alderman Matthew Petty
Ward 2 Position 2

Alderman Justin Tennant
Ward 3 Position 1

Alderman Martin W. Schoppmeyer, Jr.
Ward 3 Position 2

Alderman Rhonda Adams
Ward 4 Position 1

Alderman Alan T. Long
Ward 4 Position 2

Mayor Lioneld Jordan
City Attorney Kit Williams
City Clerk Sondra E. Smith

Final Agenda
City of Fayetteville Arkansas
City Council Meeting
July 15, 2014

A meeting of the Fayetteville City Council will be held on July 15, 2014 at 5:30 PM in Room 219 of the City Administration Building located at 113 West Mountain Street, Fayetteville, Arkansas.

Call to Order

Roll Call

Pledge of Allegiance

Mayor's Announcements, Proclamations and Recognitions:

City Council Meeting Presentations, Reports and Discussion Items:

1. 188th Arkansas Air National Guard Unit Fort Smith Presentation
2. International Institute of Municipal Clerks Certified Municipal Clerk Presentation and Arkansas City Clerks, Recorders, and Treasurers Association Certified Arkansas Municipal Clerk Presentation
3. Adrian White Municipal Leadership Award Presentation
4. 2013 Audit Report-Paul Becker Finance and Internal Services Director

Agenda Additions:

A. Consent:

1. Approval of the July 01, 2014 City Council meeting minutes. **APPROVED**

2. **Bid #14-28 Scruggs Equipment Co.:** A resolution to award Bid #14-28 to Scruggs Equipment Co. of Memphis, Tennessee and to authorize the purchase of an RS Technical Services Trak-Star Van with pipeline television inspection system in the amount of $139,685.00 for use by the Water and Sewer Operations Division.

   PASSED AND SHALL BE RECORDED AS RESOLUTION NO. 119-14

3. **Bid #14-35 Industrial Precast, Inc.:** A resolution to award Bid #14-35 and authorize the purchase of retaining wall blocks from Industrial Precast, Inc. in variable amounts as needed, and to authorize the use of other bidders based on price and availability as needed through the end of calendar year 2014.

   PASSED AND SHALL BE RECORDED AS RESOLUTION NO. 120-14

4. **Bid #14-37 Carter Waters:** A resolution to award Bid #14-37 and authorize the purchase of cold asphalt concrete from Carter Waters for a unit price of $116.82 per ton, as needed, and to authorize the use of other bidders based on price and availability as needed through the end of calendar year 2014.

   PASSED AND SHALL BE RECORDED AS RESOLUTION NO. 121-14

5. **Bid #14-32 Future Link of Illinois, Inc.:** A resolution to award Bid #14-32 and authorize the purchase of thirty-five (35) Mobile Computer Systems from Future Link of Illinois, Inc. in the amount of $150,500.00 for use in Fayetteville Police patrol vehicles.

   PASSED AND SHALL BE RECORDED AS RESOLUTION NO. 122-14

6. **Hazmat Services Revenue:** A resolution to approve a budget adjustment recognizing hazmat services revenue received by the Fire Department since February 2014.

   PASSED AND SHALL BE RECORDED AS RESOLUTION NO. 123-14

7. **Pierce Manufacturing, Inc.:** A resolution to approve a bid from Pierce Manufacturing, Inc. pursuant to the Houston-Galveston Area Council contract #800-926-0234 for a pierce 75 foot Heavy Duty Aluminum Ladder Fire Truck in the amount of $807,259.00 plus a contingency of $16,146.00.

   PASSED AND SHALL BE RECORDED AS RESOLUTION NO. 124-14

8. **Plante and Moran, PLLC:** A resolution to approve an extension to the contract with Plante and Moran, PLLC for information technology services through the end of 2014 in the amount of $106,470.00, and to approve a budget adjustment.

   PASSED AND SHALL BE RECORDED AS RESOLUTION NO. 125-14

9. **Public Access Television Fee Revenue:** A resolution to approve a budget adjustment in the amount of $4,000.00 recognizing public access television fee revenue to be used for promotional activities.

   PASSED AND SHALL BE RECORDED AS RESOLUTION NO. 126-14

10. **Yvonne Richardson Community Center: A** resolution to approve a budget adjustment in the total amount of $28,202.00 representing donation revenue to the Yvonne Richardson Community Center for the first half of 2014.

    PASSED AND SHALL BE RECORDED AS RESOLUTION NO. 127-14

11. **Urban Sustainability Directors Network:** A resolution to authorize acceptance of a grant from the Urban Sustainability Directors Network in the amount of $2,465.00, and to approve a budget adjustment.

    PASSED AND SHALL BE RECORDED AS RESOLUTION NO. 128-14

12. **Evans Construction and Remodeling, LLC:** A resolution to authorize a contract with Evans Construction and Remodeling, LLC in the amount of $38,190.00 for Community Development Block Grant Rehabilitation of an eligible residence located at 1211 N. Starr Drive.

    PASSED AND SHALL BE RECORDED AS RESOLUTION NO. 129-14

13. **Sourcegas Arkansas, Inc.:** A resolution to grant Mayor Jordan the authority to negotiate and to approve a utility work agreement with Sourcegas Arkansas, Inc. in the amount not to exceed $39,804.79 for the relocation of gas mains and facilities necessary for the Spring Street Parking Deck Project, and to approve a project contingency of $8,000.00.

    PASSED AND SHALL BE RECORDED AS RESOLUTION NO. 130-14

14. **Harvey Dowell Road Sewer Service Extension:** A resolution to approve the extension of the City's sewerage system beyond the city limits to a single residence located at 55 S. Harvey Dowell Road.

    PASSED AND SHALL BE RECORDED AS RESOLUTION NO. 131-14

15. **Federal Aviation Administration Grant Terminal Apron Rehabilitation Project:** A resolution to authorize acceptance of a Federal Aviation Administration Grant in the amount of $32,445.00 to be used for the Drake Field Terminal Apron Rehabilitation Project; to authorize the application for and acceptance of a grant for the remaining project balance from the Arkansas Department of Aeronautics at the conclusion of the project; and to approve a budget adjustment.

    PASSED AND SHALL BE RECORDED AS RESOLUTION NO. 132-14

B. Unfinished Business: None

C. New Business:

1. **Walton Family Foundation Grant Acceptance – Town Branch Trail:** A resolution to express the City Council's thanks and gratitude to the Walton Family Foundation for its generous $815,000.00 matching grant for the completion of Town Branch and Tsa-La-Gi Trails, to approve the grant agreement and to approve a budget adjustment to recognize this $815,000.00 grant.

   PASSED AND SHALL BE RECORDED AS RESOLUTION NO. 133-14

2. **Walton Family Foundation Grant Acceptance – Cato Springs Trail Design**: A resolution to express the City Council's thanks and gratitude to the Walton Family Foundation for its generous $150,000.00 matching grant for the design and engineering of the Cato Springs Trail, to approve the grant agreement and to approve a budget adjustment to recognize this $150,000.00 grant.

   PASSED AND SHALL BE RECORDED AS RESOLUTION NO. 134-14

3. **RZN 14-4703 (Northeast Corner of Wedington and Rupple Road/Wedington Zone 2):** An ordinance rezoning that property described in rezoning petition RZN 14-4703, for approximately 6.88 acres, located at the northeast corner of Wedington and Rupple Road from C-1, Neighborhood Commercial, C-2, Thoroughfare Commercial, and I-PZD, Industrial Planned Zoning District Westside Mini-Storage to CS, Community Services.

   PASSED AND SHALL BE RECORDED AS ORDINANCE NO. 5696

4. **RZN 14-4729 (Cato Springs Rd./Chambers Bank):** An ordinance rezoning that property described in rezoning petition RZN 14-4729, for approximately 253.23 acres, located along Cato Springs Road adjacent to the City's Regional Park property from R-PZD, Residential Planned Zoning District Southpass 08-2898, to UT, Urban Thoroughfare, CS, Community Services, and NC, Neighborhood Conservation.

   THIS ORDINANCE WAS LEFT ON THE FIRST READING

5. **RZN 14-4731 (Regional Park/Mt. Kessler Reserve**): An ordinance rezoning that property described in rezoning petition RZN 14-4731, for approximately 630 acres, located at Mt. Kessler Regional Park from R-PZD, Residential Planned Zoning District Southpass 08-2898, to P-1, Institutional.

   PASSED AND SHALL BE RECORDED AS ORDINANCE NO. 5697

6. **VAC 14-4753 (1560 S. Happy Hollow Rd/Recycling and Trash Collection Facility:** An ordinance approving VAC 14-4753 submitted by city staff for property located at 1560 S. Happy Hollow Road to vacate existing street right-of-way for Happy Hollow Road.

   PASSED AND SHALL BE RECORDED AS ORDINANCE NO. 5698

7. **Baldwin & Shell Construction Company:** A resolution to authorize an amendment to the contract with Baldwin & Shell Construction Company for demolition and mass excavation services for the Spring Street Parking Deck.

   PASSED AND SHALL BE RECORDED AS RESOLUTION NO. 135-14

8. **Repeal §178.05 Food Truck Limited Time Permits:** An ordinance to repeal §178.05 Food Truck Limited Time Permits and enact a replacement §178.05 Food Truck and Food Trailer Limited Time Permits.

   PASSED AND SHALL BE RECORDED AS ORDINANCE NO. 5699

9. **Enact Chapter 119 Civil Rights Administration:** An ordinance to amend the Fayetteville Code by enacting Chapter 119 Civil Rights Administration to protect the Civil Rights of Fayetteville citizens and visitors and to create the position of Civil Rights Administrator for the City of Fayetteville.

   THIS ORDINANCE WAS LEFT ON THE FIRST READING

City Council Agenda Session Presentations:

1. 2013 Audit Management Report-Judy Jacobs Audit Committee Chair

D. City Council Tour:

E. Announcements:

Adjournment: 6:51 p.m.

NOTICE TO MEMBERS OF THE AUDIENCE

All interested persons may address the City Council on agenda items of New and Old Business. Please wait for the Mayor to request public comment and then come to the podium, give your name, address, and comments about the agenda item. Please address only the Mayor. Questions are usually answered by the Mayor, Aldermen or Staff after the public comment period is over. Please keep your comments brief and respectful. Each person is only allowed one turn at the microphone for discussion of an agenda item.

All cell phones must be silenced and may not be used within the City Council Chambers.

Below is a portion of the **Rules of Order and Procedure of the Fayetteville City Council** pertaining to City Council meetings:

> **Agenda additions.** A new item which is requested to be added to the agenda at a City Council meeting should only be considered if it requires immediate City Council consideration and if the normal agenda setting process is not practical. The City Council may only place such new item on the City Council meeting's agenda by suspending the rules by two-thirds vote. Such agenda addition shall be heard prior to the Consent Agenda.
>
> **Consent Agenda.** Consent Agenda items shall be read by the Mayor and voted upon as a group without discussion by the City Council. If an Alderman wishes to comment upon or discuss a Consent Agenda item that item shall be removed and considered immediately after the Consent Agenda has been voted upon.
>
> **Old business and new business.**
>
> > **Presentations by staff and applicants.** Agenda items shall be introduced by the Mayor and, if an ordinance, read by the City Attorney. City staff shall then present a report. An agenda applicant (city contractor, rezoning or development applicant, etc.) may present its proposal only during this presentation period, but may be recalled by an alderman later to answer questions. Staff and applicants may use electronic visual aids in a City Council meeting as part of their presentation.
> >
> > **Public comments.** Public comment shall be allowed for all members of the audience on all items of old and new business and subjects of public hearings. No electronic visual aid presentations shall be allowed, but the public may submit photos, petitions, etc. to be distributed to the City Council. If a member of the public wishes for the City Clerk to distribute materials to the City Council before its meeting, such materials should be supplied to the City Clerk office no later than 9:00 a.m. on the day of the City Council meeting. Any member of the public shall first state his or her name and address, followed by a concise statement of the person's position on the question under discussion. Repetitive comments should be avoided; this applies to comments made previously either to the City Council or to the Planning Commission when those Planning Commission minutes have been provided to the Aldermen. All remarks shall be addressed to the Mayor or the City Council as a whole and not to any particular member of the City Council. No person other than the Aldermen and the person having the floor shall be permitted to enter into any discussions without permission of the Mayor. No questions shall be directed to an Alderman or city staff member except through the Mayor.
>
> **Courtesy and respect.** All members of the public, all city staff and elected officials shall accord the utmost courtesy and respect to each other at all times. All shall refrain from rude or derogatory remarks, reflections as to integrity, abusive comments and statements about motives or personalities. Any member of the public who violates these standards shall be ruled out of order by the Mayor, must immediately cease speaking and shall leave the podium.

Interpreters or TDD for hearing impaired are available for all City Council meetings, a 72 hour advance notice is required. For further information or to request an interpreter, please call (479) 575-8330.

A copy of the complete City Council agenda is available at www.fayetteville-ar.gov or in the office of the City Clerk, 113 W. Mountain, Fayetteville, Arkansas.

City Council Meeting: **July 15, 2014** **Adjourn:** 6:51 pm

Subject:	**Roll**				
Alderman Adams was absent	**Long**	✓			
	Gray	✓			
	Marsh	✓			
	Kinion	✓			
	Petty	✓			
	Tennant	✓			
	Schoppmeyer	✓			
	Adams	absent			
	Mayor Jordan	✓			

8-0

Subject:					
Motion To:					
Motion By:					
Seconded:					
	Long				
	Gray				
	Marsh				
	Kinion				
	Petty				
	Tennant				
	Schoppmeyer				
	Adams				
	Mayor Jordan				

City Council Meeting: **July 15, 2014**

Subject:	**Consent**				
Motion To:		Approve			
Motion By:		Long			
Seconded:		Petty			
Minutes Approved	**Long**	✓			
	Gray	✓			
	Marsh	✓			
	Kinion	✓			
passed	**Petty**	✓			
	Tennant	✓			
119-14	**Schoppmeyer**	✓			
thru	**Adams**	absent			
132-14	**Mayor Jordan**				

7-0

Subject:					
Motion To:					
Motion By:					
Seconded:					
	Long				
	Gray				
	Marsh				
	Kinion				
	Petty				
	Tennant				
	Schoppmeyer				
	Adams				
	Mayor Jordan				

City Council Meeting: **July 15, 2014**

Subject:	**Walton Family Foundation Grant Acceptance – Town Branch Trail**				
Motion To:		Approve			
Motion By:		Petty			
Seconded:		Tennant			
C. 1	**Long**	✓			
New	**Gray**	✓			
Business	**Marsh**	✓			
	Kinion	✓			
	Petty	✓			
passed	**Tennant**	✓			
	Schoppmeyer	✓			
	Adams	Absent			
133-14	**Mayor Jordan**				

7-0

Subject:	**Walton Family Foundation Grant Acceptance – Cato Springs Trail Design**				
Motion To:		Approve			
Motion By:		Petty			
Seconded:		Marsh			
C. 2	**Long**	✓			
New	**Gray**	✓			
Business	**Marsh**	✓			
	Kinion	✓			
passed	**Petty**	✓			
	Tennant	✓			
	Schoppmeyer	✓			
	Adams	Absent			
134-14	**Mayor Jordan**				

7-0

City Council Meeting: **July 15, 2014**

Subject:	**RZN 14-4703 (Northeast Corner of Wedington and Rupple Road/Wedington Zone 2)**				
Motion To:		2nd Read	3rd Read	Pass	
Motion By:		Petty	Marsh		
Seconded:		Marsh	Gray		
C. 3 New Business	**Long**	✓	✓	✓	
	Gray	✓	✓	✓	
	Marsh	✓	✓	✓	
	Kinion	✓	✓	✓	
	Petty	✓	✓	✓	
passed	**Tennant**	✓	✓	✓	
	Schoppmeyer	✓	✓	✓	
	Adams	absent	absent	absent	
56946	**Mayor Jordan**				
		7-0	7-0	7-0	

Subject:	**RZN 14-4729 (Cato Springs Rd./Chambers Bank)**				
Motion To:					
Motion By:					
Seconded:					
C. 4 New Business	**Long**				
	Gray				
	Marsh				
	Kinion				
Left on the Just Reading	**Petty**				
	Tennant				
	Schoppmeyer				
	Adams				
	Mayor Jordan				

City Council Meeting: **July 1., 2014**

Subject:	**RZN 14-4731 (Regional Park/Mt. Kessler Reserve)**				
Motion To:		2nd Read	3rd Read	Pass	
Motion By:		Marsh	Long		
Seconded:		Long	Marsh		
C. 5	**Long**	✓	✓	✓	
New	**Gray**	✓	✓	✓	
Business	**Marsh**	✓	✓	✓	
	Kinion	✓	✓	✓	
	Petty	✓	✓	✓	
Passed	**Tennant**	✓	✓	✓	
	Schoppmeyer	✓	✓	✓	
	Adams	Absent	Absent	Absent	
5607	**Mayor Jordan**				
		7-0	7-0	7-0	

Subject:	**VAC 14-4753 (1560 S. Happy Hollow Rd/Recycling and Trash Collection Facility)**				
Motion To:		2nd Read	3rd Read	Pass	
Motion By:		Tennant	Gray		
Seconded:		Marsh	Tennant		
C. 6	**Long**	✓	✓	✓	
New	**Gray**	✓	✓	✓	
Business	**Marsh**	✓	✓	✓	
	Kinion	✓	✓	✓	
	Petty	✓	✓	✓	
Passed	**Tennant**	✓	✓	✓	
	Schoppmeyer	✓	✓	✓	
	Adams	Absent	Absent	Absent	
5608	**Mayor Jordan**				
		7-0	7-0	7-0	

City Council Meeting: **July 15, 2014**

Subject:	**Baldwin & Shell Construction Company**				
Motion To:		Approve			
Motion By:		Petty			
Seconded:		Schoppmeyer			
C. 7 New Business	**Long**	✓			
	Gray	✓			
	Marsh	✓			
	Kinion	✓			
	Petty	✓			
passed	**Tennant**	✓			
	Schoppmeyer	✓			
	Adams	absent			
135-14	**Mayor Jordan**				
		7-0			

Subject:	**Repeal §178.05 Food Truck Limited Time Permits**				
Motion To:		2nd Read	3rd Read	Pass	
Motion By:		Petty	Long		
Seconded:		Marsh	Marsh		
C. 8 New Business	**Long**	✓	✓	✓	
	Gray	✓	✓	✓	
	Marsh	✓	✓	✓	
	Kinion	✓	✓	✓	
	Petty	✓	✓	✓	
	Tennant	✓	✓	✓	
	Schoppmeyer	✓	✓	✓	
	Adams	absent	absent	absent	
51099	**Mayor Jordan**				
		7-0	7-0	7-0	

City Council Meeting: **July 15, 2014**

Subject:	**Enact Chapter 119 Civil Rights Administration**				
Motion To:					
Motion By:					
Seconded:					
C. 9 New Business Left on the First Reading	**Long**				
	Gray				
	Marsh				
	Kinion				
	Petty				
	Tennant				
	Schoppmeyer				
	Adams				
	Mayor Jordan				

Subject:					
Motion To:					
Motion By:					
Seconded:					
	Long				
	Gray				
	Marsh				
	Kinion				
	Petty				
	Tennant				
	Schoppmeyer				
	Adams				
	Mayor Jordan				

DEPARTMENTAL CORRESPONDENCE

OFFICE OF THE
CITY ATTORNEY

Kit Williams
City Attorney

Blake Pennington
Assistant City Attorney

Patti Mulford
Paralegal

TO: **Mayor Jordan**

THRU: **Sondra Smith,** City Clerk

FROM: **Kit Williams,** City Attorney

DATE: **July 16, 2014**

RE: **Resolutions and Ordinances prepared by the City Attorney's Office and passed at the City Council meeting of July 15, 2014**

1. **Bid #14-28 Scruggs Equipment Co.:** A resolution to award Bid #14-28 to Scruggs Equipment Co. of Memphis, Tennessee and to authorize the purchase of an RS Technical Services Trak-Star Van with pipeline television inspection system in the amount of $139,685.00 for use by the Water and Sewer Operations Division.

2. **Bid #14-35 Industrial Precast, Inc.:** A resolution to award Bid #14-35 and authorize the purchase of retaining wall blocks from Industrial Precast, Inc. in variable amounts as needed, and to authorize the use of other bidders based on price and availability as needed through the end of calendar year 2014.

3. **Bid #14-37 Carter Waters:** A resolution to award Bid #14-37 and authorize the purchase of cold asphalt concrete from Carter Waters for a unit price of $116.82 per ton, as needed, and to authorize the use of other bidders based on price and availability as needed through the end of calendar year 2014.

4. **Bid #14-32 Future Link of Illinois, Inc.:** A resolution to award Bid #14-32 and authorize the purchase of thirty-five (35) Mobile Computer Systems from Future Link of Illinois, Inc. in the amount of $150,500.00 for use in Fayetteville Police patrol vehicles.

5. **Hazmat Services Revenue:** A resolution to approve a budget adjustment recognizing hazmat services revenue received by the Fire Department since February 2014.

6. **Pierce Manufacturing, Inc.:** A resolution to approve a bid from Pierce Manufacturing, Inc. pursuant to the Houston-Galveston Area Council contract #800-926-0234 for a Pierce 75 foot Heavy Duty Aluminum Ladder Fire Truck in the amount of $807,259.00 plus a contingency of $16,146.00.

7. **Plante and Moran, PLLC:** A resolution to approve an extension to the contract with Plante and Moran, PLLC for information technology services through the end of 2014 in the amount of $106,470.00, and to approve a budget adjustment.

8. **Public Access Television Fee Revenue:** A resolution to approve a budget adjustment in the amount of $4,000.00 recognizing public access television fee revenue to be used for promotional activities.

9. **Yvonne Richardson Community Center:** A resolution to approve a budget adjustment in the total amount of $28,202.00 representing donation revenue to the Yvonne Richardson Community Center for the first half of 2014.

10. **Urban Sustainability Directors Network:** A resolution to authorize acceptance of a grant from the Urban Sustainability Directors Network in the amount of $2,465.00, and to approve a budget adjustment.

11. **Evans Construction and Remodeling, LLC:** A resolution to authorize a contract with Evans Construction and Remodeling, LLC in the amount of $38,190.00 for Community Development Block Grant Rehabilitation of an eligible residence located at 1211 N. Starr Drive.

12. **Sourcegas Arkansas, Inc.:** A resolution to grant Mayor Jordan the authority to negotiate and to approve a utility work agreement with Sourcegas Arkansas, Inc. in the amount not to exceed $39,804.79 for the relocation of gas mains and facilities necessary for the Spring Street Parking Deck Project, and to approve a project contingency of $8,000.00.

13. **Harvey Dowell Road Sewer Service Extension:** A resolution to approve the extension of the City's sewerage system beyond the city limits to a single residence located at 55 S. Harvey Dowell Road.

14. **Federal Aviation Administration Grant Terminal Apron Rehabilitation Project:** A resolution to authorize acceptance of a Federal Aviation Administration Grant in the amount of $32,445.00 to be used for the Drake Field Terminal Apron Rehabilitation Project; to authorize the application for and acceptance of a grant for the remaining project balance from the Arkansas Department of Aeronautics at the conclusion of the project; and to approve a budget adjustment.

15. **Walton Family Foundation Grant Acceptance – Town Branch Trail:** A resolution to express the City Council's thanks and gratitude to the Walton Family Foundation for its generous $815,000.00 matching grant for the completion of Town Branch and Tsa-La-Gi Trails, to approve the grant agreement and to approve a budget adjustment to recognize this $815,000.00 grant.

16. **Walton Family Foundation Grant Acceptance – Cato Springs Trail Design**: A resolution to express the City Council's thanks and gratitude to the Walton Family Foundation for its

generous $150,000.00 matching grant for the design and engineering of the Cato Springs Trail, to approve the grant agreement and to approve a budget adjustment to recognize this $150,000.00 grant.

17. **Baldwin & Shell Construction Company:** A resolution to authorize an amendment to the contract with Baldwin & Shell Construction Company for demolition and mass excavation services for the Spring Street Parking Deck.

18. **Repeal §178.05 Food Truck Limited Time Permits:** An ordinance to repeal §178.05 Food Truck Limited Time Permits and enact a replacement §178.05 Food Truck and Food Trailer Limited Time Permits.

Alderman Adella Gray
Ward 1 Position 1

Alderman Sarah Marsh
Ward 1 Position 2

Alderman Mark Kinion
Ward 2 Position 1

Alderman Matthew Petty
Ward 2 Position 2

Alderman Justin Tennant
Ward 3 Position 1

Alderman Martin W. Schoppmeyer, Jr.
Ward 3 Position 2

Alderman Rhonda Adams
Ward 4 Position 1

Alderman Alan T. Long
Ward 4 Position 2

Mayor Lioneld Jordan
City Attorney Kit Williams
City Clerk Sondra E. Smith

Final Agenda
City of Fayetteville Arkansas
City Council Meeting
July 15, 2014

A meeting of the Fayetteville City Council will be held on July 15, 2014 at 5:30 PM in Room 219 of the City Administration Building located at 113 West Mountain Street, Fayetteville, Arkansas.

Call to Order

Roll Call

Pledge of Allegiance

Mayor's Announcements, Proclamations and Recognitions:

City Council Meeting Presentations, Reports and Discussion Items:

1. 188th Arkansas Air National Guard Unit Fort Smith Presentation
2. International Institute of Municipal Clerks Certified Municipal Clerk Presentation and Arkansas City Clerks, Recorders, and Treasurers Association Certified Arkansas Municipal Clerk Presentation
3. Adrian White Municipal Leadership Award Presentation
4. 2013 Audit Report-Paul Becker Finance and Internal Services Director

Agenda Additions:

A. Consent:

1. Approval of the July 01, 2014 City Council meeting minutes.

2. **Bid #14-28 Scruggs Equipment Co.:** A resolution to award Bid #14-28 to Scruggs Equipment Co. of Memphis, Tennessee and to authorize the purchase of an RS Technical Services Trak-Star Van with pipeline television inspection system in the amount of $139,685.00 for use by the Water and Sewer Operations Division.

3. **Bid #14-35 Industrial Precast, Inc.:** A resolution to award Bid #14-35 and authorize the purchase of retaining wall blocks from Industrial Precast, Inc. in variable amounts as needed, and to authorize the use of other bidders based on price and availability as needed through the end of calendar year 2014.

4. **Bid #14-37 Carter Waters:** A resolution to award Bid #14-37 and authorize the purchase of cold asphalt concrete from Carter Waters for a unit price of $116.82 per ton, as needed, and to authorize the use of other bidders based on price and availability as needed through the end of calendar year 2014.

5. **Bid #14-32 Future Link of Illinois, Inc.:** A resolution to award Bid #14-32 and authorize the purchase of thirty-five (35) Mobile Computer Systems from Future Link of Illinois, Inc. in the amount of $150,500.00 for use in Fayetteville Police patrol vehicles.

6. **Hazmat Services Revenue:** A resolution to approve a budget adjustment recognizing hazmat services revenue received by the Fire Department since February 2014.

7. **Pierce Manufacturing, Inc.:** A resolution to approve a bid from Pierce Manufacturing, Inc. pursuant to the Houston-Galveston Area Council contract #800-926-0234 for a pierce 75 foot Heavy Duty Aluminum Ladder Fire Truck in the amount of $807,259.00 plus a contingency of $16,146.00.

8. **Plante and Moran, PLLC:** A resolution to approve an extension to the contract with Plante and Moran, PLLC for information technology services through the end of 2014 in the amount of $106,470.00, and to approve a budget adjustment.

9. **Public Access Television Fee Revenue:** A resolution to approve a budget adjustment in the amount of $4,000.00 recognizing public access television fee revenue to be used for promotional activities.

10. **Yvonne Richardson Community Center: A** resolution to approve a budget adjustment in the total amount of $28,202.00 representing donation revenue to the Yvonne Richardson Community Center for the first half of 2014.

11. **Urban Sustainability Directors Network:** A resolution to authorize acceptance of a grant from the Urban Sustainability Directors Network in the amount of $2,465.00, and to approve a budget adjustment.

12. **Evans Construction and Remodeling, LLC:** A resolution to authorize a contract with Evans Construction and Remodeling, LLC in the amount of $38,190.00 for Community Development Block Grant Rehabilitation of an eligible residence located at 1211 N. Starr Drive.

13. **Sourcegas Arkansas, Inc.:** A resolution to grant Mayor Jordan the authority to negotiate and to approve a utility work agreement with Sourcegas Arkansas, Inc. in the amount not to exceed $39,804.79 for the relocation of gas mains and facilities necessary for the Spring Street Parking Deck Project, and to approve a project contingency of $8,000.00.

14. **Harvey Dowell Road Sewer Service Extension:** A resolution to approve the extension of the City's sewerage system beyond the city limits to a single residence located at 55 S. Harvey Dowell Road.

15. **Federal Aviation Administration Grant Terminal Apron Rehabilitation Project:** A resolution to authorize acceptance of a Federal Aviation Administration Grant in the amount of $32,445.00 to be used for the Drake Field Terminal Apron Rehabilitation Project; to authorize the application for and acceptance of a grant for the remaining project balance from the Arkansas Department of Aeronautics at the conclusion of the project; and to approve a budget adjustment.

B. Unfinished Business: None

C. New Business:

1. **Walton Family Foundation Grant Acceptance – Town Branch Trail:** A resolution to express the City Council's thanks and gratitude to the Walton Family Foundation for its generous $815,000.00 matching grant for the completion of Town Branch and Tsa-La-Gi Trails, to approve the grant agreement and to approve a budget adjustment to recognize this $815,000.00 grant.

2. **Walton Family Foundation Grant Acceptance – Cato Springs Trail Design**: A resolution to express the City Council's thanks and gratitude to the Walton Family Foundation for its generous $150,000.00 matching grant for the design and engineering of the Cato Springs Trail, to approve the grant agreement and to approve a budget adjustment to recognize this $150,000.00 grant.

3. **RZN 14-4703 (Northeast Corner of Wedington and Rupple Road/Wedington Zone 2):** An ordinance rezoning that property described in rezoning petition RZN 14-4703, for approximately 6.88 acres, located at the northeast corner of Wedington and Rupple Road from C-1, Neighborhood Commercial, C-2, Thoroughfare Commercial, and I-PZD, Industrial Planned Zoning District Westside Mini-Storage to CS, Community Services.

4. **RZN 14-4729 (Cato Springs Rd./Chambers Bank):** An ordinance rezoning that property described in rezoning petition RZN 14-4729, for approximately 253.23 acres, located along Cato Springs Road adjacent to the City's Regional Park property from R-PZD, Residential Planned Zoning District Southpass 08-2898, to UT, Urban Thoroughfare, CS, Community Services, and NC, Neighborhood Conservation.

5. **RZN 14-4731 (Regional Park/Mt. Kessler Reserve**): An ordinance rezoning that property described in rezoning petition RZN 14-4731, for approximately 630 acres, located at Mt. Kessler Regional Park from R-PZD, Residential Planned Zoning District Southpass 08-2898, to P-1, Institutional.

6. **VAC 14-4753 (1560 S. Happy Hollow Rd/Recycling and Trash Collection Facility:** An ordinance approving VAC 14-4753 submitted by city staff for property located at 1560 S. Happy Hollow Road to vacate existing street right-of-way for Happy Hollow Road.

7. **Baldwin & Shell Construction Company:** A resolution to authorize an amendment to the contract with Baldwin & Shell Construction Company for demolition and mass excavation services for the Spring Street Parking Deck.

8. **Repeal §178.05 Food Truck Limited Time Permits:** An ordinance to repeal §178.05 Food Truck Limited Time Permits and enact a replacement §178.05 Food Truck and Food Trailer Limited Time Permits.

9. **Enact Chapter 119 Civil Rights Administration:** An ordinance to amend the Fayetteville Code by enacting Chapter 119 Civil Rights Administration to protect the Civil Rights of Fayetteville citizens and visitors and to create the position of Civil Rights Administrator for the City of Fayetteville.

City Council Agenda Session Presentations:

1. 2013 Audit Management Report-Judy Jacobs Audit Committee Chair

D. City Council Tour:

E. Announcements:

Adjournment:

NOTICE TO MEMBERS OF THE AUDIENCE

All interested persons may address the City Council on agenda items of New and Old Business. Please wait for the Mayor to request public comment and then come to the podium, give your name, address, and comments about the agenda item. Please address only the Mayor. Questions are usually answered by the Mayor, Aldermen or Staff after the public comment period is over. Please keep your comments brief and respectful. Each person is only allowed one turn at the microphone for discussion of an agenda item.

All cell phones must be silenced and may not be used within the City Council Chambers.

Below is a portion of the **Rules of Order and Procedure of the Fayetteville City Council** pertaining to City Council meetings:

> **Agenda additions.** A new item which is requested to be added to the agenda at a City Council meeting should only be considered if it requires immediate City Council consideration and if the normal agenda setting process is not practical. The City Council may only place such new item on the City Council meeting's agenda by suspending the rules by two-thirds vote. Such agenda addition shall be heard prior to the Consent Agenda.
>
> **Consent Agenda.** Consent Agenda items shall be read by the Mayor and voted upon as a group without discussion by the City Council. If an Alderman wishes to comment upon or discuss a Consent Agenda item that item shall be removed and considered immediately after the Consent Agenda has been voted upon.
>
> **Old business and new business.**

Presentations by staff and applicants. Agenda items shall be introduced by the Mayor and, if an ordinance, read by the City Attorney. City staff shall then present a report. An agenda applicant (city contractor, rezoning or development applicant, etc.) may present its proposal only during this presentation period, but may be recalled by an alderman later to answer questions. Staff and applicants may use electronic visual aids in a City Council meeting as part of their presentation.

Public comments. Public comment shall be allowed for all members of the audience on all items of old and new business and subjects of public hearings. No electronic visual aid presentations shall be allowed, but the public may submit photos, petitions, etc. to be distributed to the City Council. If a member of the public wishes for the City Clerk to distribute materials to the City Council before its meeting, such materials should be supplied to the City Clerk office no later than 9:00 a.m. on the day of the City Council meeting. Any member of the public shall first state his or her name and address, followed by a concise statement of the person's position on the question under discussion. Repetitive comments should be avoided; this applies to comments made previously either to the City Council or to the Planning Commission when those Planning Commission minutes have been provided to the Aldermen. All remarks shall be addressed to the Mayor or the City Council as a whole and not to any particular member of the City Council. No person other than the Aldermen and the person having the floor shall be permitted to enter into any discussions without permission of the Mayor. No questions shall be directed to an Alderman or city staff member except through the Mayor.

Courtesy and respect. All members of the public, all city staff and elected officials shall accord the utmost courtesy and respect to each other at all times. All shall refrain from rude or derogatory remarks, reflections as to integrity, abusive comments and statements about motives or personalities. Any member of the public who violates these standards shall be ruled out of order by the Mayor, must immediately cease speaking and shall leave the podium.

Interpreters or TDD for hearing impaired are available for all City Council meetings, a 72 hour advance notice is required. For further information or to request an interpreter, please call (479) 575-8330.

A copy of the complete City Council agenda is available at www.fayetteville-ar.gov or in the office of the City Clerk, 113 W. Mountain, Fayetteville, Arkansas.

Sourcegas – New resolution
handed out at agenda session.

DEPARTMENTAL CORRESPONDENCE

OFFICE OF THE
CITY ATTORNEY

Kit Williams
City Attorney

Blake Pennington
Assistant City Attorney

Patti Mulford
Paralegal

TO: **Mayor Jordan**
City Council

CC: **Don Marr,** Chief of Staff
Paul Becker, Finance Director
Jeremy Pate, Development Services Director
Chris Brown, City Engineer

FROM: **Kit Williams,** City Attorney

DATE: **July 8, 2014**

RE: **Replaced Resolution to move gas mains for Spring Street Parking Deck**

Further negotiations need to be conducted with SoureGas, Inc. over the proper amount of compensation it deserves for the relocation of its gas lines. The City believes that the $39,805.00 sought by Source Gas is too high because a substantial portion of its mains are in the right of way and so should be moved at the company's expense rather than the City's expense.

We have amended the Resolution to grant Mayor Jordan and his staff sufficient authority to continue the negotiations with SourceGas by placing a "not to exceed" amount rather than just agreeing to this amount.

RESOLUTION NO. _____

A RESOLUTION TO GRANT MAYOR JORDAN THE AUTHORITY TO NEGOTIATE AND TO APPROVE A UTILITY WORK AGREEMENT WITH SOURCEGAS ARKANSAS, INC. IN THE AMOUNT NOT TO EXCEED $39,804.79 FOR THE RELOCATION OF GAS MAINS AND FACILITIES NECESSARY FOR THE SPRING STREET PARKING DECK PROJECT AND TO APPROVE A PROJECT CONTINGENCY OF $8,000.00

WHEREAS, the Spring Street Parking Deck Project will require certain gas mains and facilities belonging to SourceGas Arkansas, Inc. ("SourceGas") to be relocated; and

WHEREAS, Ordinance No. 5542, which was passed and approved on November 20, 2012, waives the requirement of formal bidding on "all such projects necessitated by any road reconstruction or widening projects with SourceGas Arkansas, Inc. within Fayetteville until December 31, 2016".

NOW, THEREFORE, BE IT RESOLVED BY THE CITY COUNCIL OF THE CITY OF FAYETTEVILLE, ARKANSAS:

Section 1. That the City Council of the City of Fayetteville, Arkansas hereby approves the granting of authority to Mayor Jordan to negotiate and sign a final utility work agreement with SourceGas Arkansas, Inc., in an amount not to exceed $39,805.00 for the relocation of gas mains and facilities necessary for the Spring Street Parking Deck Project, and further approves a project contingency of $8,000.00.

PASSED and **APPROVED** this 15th day of July, 2014.

APPROVED:

By: _____
LIONELD JORDAN, Mayor

ATTEST:

By: _____
SONDRA E. SMITH, City Clerk/Treasurer

City of Fayetteville Staff Review Form

2014-0304

Legistar File ID

7/15/2014

City Council Meeting Date - Agenda Item Only
N/A for Non-Agenda Item

James Nicholson	7/3/2014	Aviation / Transportation Services Department
Submitted By	**Submitted Date**	**Division / Department**

Action Recommendation:

A Resolution to: a) accept and signature of the Mayor on a Grant Offer from DOT/FAA for a 90% grant for engineering services associated with the Terminal Aircraft Parking Area Rehab project. b) apply for and accept a 10% matching grant from the Arkansas Dept of Aeronautics at the conclusion of the project. c) Approval of a Budget Adjustment recognizing the grant revenue.

Budget Impact:

5550.0955.6820.42	Airport
Account Number	Fund
14014 1	Airport Terminal Apron Rehabilitation
Project Number	Project Title

Budgeted Item?	Yes	Current Budget	$ -
		Funds Obligated	$ -
		Current Balance	$ -
Does item have a cost?	NA	Item Cost	$ -
Budget Adjustment Attached?	Yes	Budget Adjustment	$ -
		Remaining Budget	$ -

V20140610

Previous Ordinance or Resolution # 33-14

Original Contract Number:

Approval Date:

Comments: Signed original must be returned to FAA by July 31st, 2014.

ENTERED 7-7-14 RM

ENTERED 7/7/14

7/7/14

Paul A. Becker 7-7-2014
for Don Marr

Paul A. Becker 7-7-2014

CITY OF Fayetteville ARKANSAS

CITY COUNCIL AGENDA MEMO

MEETING OF JULY 15, 2014

TO: Mayor and City Council

THRU: Don Marr, Chief of Staff
Terry Gulley, Transportation Services Director
Staff Review Committee

FROM: James Nicholson, Airport Financial Coordinator

DATE: July 7, 2014

SUBJECT: **Request for 'Walk-on" item**

RECOMMENDATION:
Add item as a "walk-on" agenda item for the July 15th City Council Meeting.

BACKGROUND:
The agenda item to accept a grant from the FAA is submitted after the July 15th City Council meeting deadline. The language from the rules of procedure is as follows:

A.7a. **Agenda items not included within the Tentative Agenda packet.**

(1) *Staff agenda items.* If the City staff requests to "walk-on" an agenda item for the City Council Agenda during the City Council Agenda Session, **the memo from the City staff shall begin with a clear and compelling reason why this proposed agenda item could not have been included within the Tentative Agenda and cannot wait for City Council consideration at a later City Council meeting**. Any member of the City Council including the Mayor can then place this item on the Final Agenda.

DISCUSSION:
The grant documents from the FAA were received by the City after the Council Agenda deadline for inclusion on the agenda. The FAA has prescribed a deadline for return of the signed documents to the agency of July 31st, 2014, thereby necessitating the item's approval by the City Council and subsequent processing for the required signatures in order to meet that deadline.

BUDGET/STAFF IMPACT:
N/A

Attachments:

CITY OF Fayetteville ARKANSAS

CITY COUNCIL AGENDA MEMO

MEETING OF JULY 15, 2014

TO: Mayor and City Council

THRU: Don Marr, Chief of Staff
Terry Gulley, Transportation Services Director
Staff Review Committee

FROM: James Nicholson, Airport Financial Coordinator

DATE: July 3, 2014

SUBJECT: **DOT/FAA AIP Grant – Terminal Apron Rehabilitation, Proj #14014**

RECOMMENDATION:
A Resolution to: a) accept an Airport Improvement Program (AIP) grant from the Federal Aviation Administration (FAA). Signature of the Mayor and City Attorney. b) Apply for and accept a grant from the Arkansas Department of Aeronautics at the conclusion of the project. c) Approve a Budget Adjustment.

BACKGROUND:
Resolution No. 33-14, 2/18/14, approved Task Order #10 with McClelland Consulting Engineers, Inc. for project design and bidding services associated with the Terminal Apron Rehabilitation Project. Work on the project is contingent upon funding from the FAA and the Arkansas Department of Aeronautics.

DISCUSSION:
An application was submitted and the FAA has offered a grant to the City for 90% funding of the design and bidding phase of the project. The remaining 10% of this phase of the project is eligible for reimbursement from the Arkansas Department of Aeronautics. However, application for the state funds does not occur until the conclusion of the project.

Approval of the funding from the FAA will allow the Airport to provide a Notice to Proceed to McClelland Consulting Engineers, Inc., to begin the design work leading to bidding. Once bids are received, additional applications for grants from the FAA and Department Aeronautics will be processed to complete the construction phase of the project; anticipated to cost approximately $450,000. Construction will likely take place in 2015.

BUDGET/STAFF IMPACT:
The FAA grant will provide $32,445 revenue to the Airport Fund to offset 90% of the design/bidding cost of $36,050. It is anticipated that the Arkansas Department of Aeronautics will provide the 10% balance of the cost, or $3,605.

Attachments:
Staff Review Form
Budget Adjustment
Original and Copy of AIP Grant Offer
Copy Res No. 33-14

RESOLUTION NO. _____

A RESOLUTION TO AUTHORIZE ACCEPTANCE OF A FEDERAL AVIATION ADMINISTRATION GRANT IN THE AMOUNT OF $32,445.00 TO BE USED FOR THE DRAKE FIELD TERMINAL APRON REHABILITATION PROJECT; TO AUTHORIZE THE APPLICATION FOR AND ACCEPTANCE OF A GRANT FOR THE REMAINING PROJECT BALANCE FROM THE ARKANSAS DEPARTMENT OF AERONAUTICS AT THE CONCLUSION OF THE PROJECT; AND TO APPROVE A BUDGET ADJUSTMENT

BE IT RESOLVED BY THE CITY COUNCIL OF THE CITY OF FAYETTEVILLE, ARKANSAS:

Section 1. That the City Council of the City of Fayetteville, Arkansas hereby authorizes acceptance of a Federal Aviation Administration grant in the amount of $32,445.00 to be used for the Drake Field Terminal Apron Rehabilitation Project and also authorizes the application for and acceptance of a grant for the remaining project balance, which is expected to be $3,605.00, from the Arkansas Department of Aeronautics at the conclusion of the project.

Section 2. That the City Council of the City of Fayetteville, Arkansas hereby approves a budget adjustment, a copy of which is attached as Exhibit "A," recognizing the revenue.

PASSED and **APPROVED** this 15th day of July, 2014.

APPROVED:

By: _____
LIONELD JORDAN, Mayor

ATTEST:

By: _____
SONDRA E. SMITH, City Clerk/Treasurer

City of Fayetteville, Arkansas - Budget Adjustment Form (Legistar)

Budget Year	Division:	Aviation	Adjustment Number
2014	Dept.:	Transportation Services	
	Requestor:	James Nicholson	

BUDGET ADJUSTMENT DESCRIPTION / JUSTIFICATION:

To recognize grant revenue from the DOT/FAA and the Arkansas Department of Aeronautics for 90% and 10% respectively, reimbursement of project costs associated with the design and bidding phase of the Terminal Apron

COUNCIL DATE: 7/15/2014

LEGISTAR FILE ID#: **2014-0304**

Barbara Fell
7/7/2014 10:51 AM

Budget Director Date

TYPE:

DESCRIPTION:

GLDATE:

POSTED: /

RESOLUTION/ORDINANCE

v.20140619

	Increase / (Decrease)		Project.Sub#			
Account Number	Expense	Revenue	Project	Sub	AT	Account Name
TOTAL	-	-				
5550.0955.4999.99	-	(36,050)			RE	Use of Fund Balance
5550.0955.6803.00	-	3,605	14014	1	RE	State Grants on Federal Projects
5550.0955.6820.42	-	32,445	14014	1	RE	**N/A
	-	-				
	-	-				
	-	-				
	-	-				
	-	-				
	-	-				
	-	-				
	-	-				
	-	-				
	-	-				
	-	-				
	-	-				

ORIGINAL

U.S. Department
of Transportation
**Federal Aviation
Administration**

Airports Division
Southwest Region
Arkansas,Oklahoma

FAA ASW-630
2601 Meacham Blvd.
Fort Worth, TX 76137

JUL 01 2014

The Honorable Lionel D. Jordan
Mayor of Fayetteville
113 West Mountain
Fayetteville, AR 72701

Dear Mayor Jordan:

We are enclosing the original and one copy of the Grant Offer for Airport Improvement Program (AIP) Project No. 3-05-0020-042-2014 at Drake Field Airport. This letter outlines expectations for success. Please read the conditions and assurances carefully.

To properly enter into this agreement, you must do the following:

- The governing body must pass a resolution and execute the grant, along with your attorney's certification, by July 31, 2014, in order for the grant to be valid.
- No change may be made by you or your representative to the Grant Offer.
- We ask that you return the Grant Offer marked "Original" to us by overnight mail, facsimile, regular mail, or E-Mail (PDF), and maintain the copy marked "Copy" for your records.

Subject to the requirements in 49 CFR § 18.21, each payment request for reimbursement under this grant must be made electronically via the Delphi eInvoicing System. Please see the attached Grant Agreement for more information regarding the use of this System.

Please note Grant Condition No. 4 requires you to complete the project without undue delay. We will be paying close attention to your progress to ensure proper stewardship of these Federal funds. **You are expected to submit payment requests for reimbursement of allowable incurred project expenses in accordance with project progress.** Should you fail to make draws on a regular basis, your grant may be placed in "inactive" status which will impact future grant offers.

Until the grant is completed and closed, you are responsible for submitting formal reports as follows:

- A signed/dated SF-270 (non-construction projects) or SF-271 or equivalent (construction projects) and SF-425 annually, due 90 days after the end of each federal fiscal year in which this grant is open (due December 31 of each year this grant is open); and
- Quarterly Performance Reports due every quarter.

Once the project(s) is completed and all costs are determined, we ask that you close the project without delay and submit, as a minimum, the following:

- Sponsor Certification for Project Final Acceptance;
- Summary of all change orders and summary of all testing; and
- Final SF-270 or SF-271 (or equivalent) and SF-425.

Paul Burns is the assigned program manager for this grant and is readily available to assist you and your designated representative with the requirements stated herein. We sincerely value your cooperation in these efforts and look forward to working with you to complete this important project.

Sincerely,

Glenn A Boles,
Manager, AR/OK Airports Development Office

ORIGINAL

U.S. Department
of Transportation
Federal Aviation
Administration

GRANT AGREEMENT

PART I – OFFER

Date of Offer	JUL 0 7 2014
Airport/Planning Area	**Drake Field**
AIP Grant Number	**3-05-0020-042-2014**
DUNS Number	**134398903**

TO: **City of Fayetteville**
(herein called the "Sponsor")

FROM: **The United States of America** (acting through the Federal Aviation Administration, herein called the "FAA")

WHEREAS, the Sponsor has submitted to the FAA a Project Application dated **May 21, 2014**, for a grant of Federal funds for a project at or associated with the Drake Field Airport, which is included as part of this Grant Agreement; and

WHEREAS, the FAA has approved a project for the Drake Field Airport (herein called the "Project") consisting of the following:

Rehabilitate Apron (Design-only)

which is more fully described in the Project Application.

NOW THEREFORE, According to the applicable provisions of the former Federal Aviation Act of 1958, as amended and recodified, 49 U.S.C. 40101, et seq., and the former Airport and Airway Improvement Act of 1982 (AAIA), as amended and recodified, 49 U.S.C. 47101, et seq., (herein the AAIA grant statute is referred to as "the Act"), the representations contained in the Project Application, and in consideration of (a) the Sponsor's adoption and ratification of the Grant Assurances dated April 3, 2014, and the Sponsor's acceptance of this Offer, and (b) the benefits to accrue to the United States and the public from the accomplishment of the Project and compliance with the Grant Assurances and conditions as herein provided,

THE FEDERAL AVIATION ADMINISTRATION, FOR AND ON BEHALF OF THE UNITED STATES, HEREBY OFFERS AND AGREES to pay 90 percent of the allowable costs incurred accomplishing the Project as the United States share of the Project.

This Offer is made on and **SUBJECT TO THE FOLLOWING TERMS AND CONDITIONS**:

CONDITIONS

1. **Maximum Obligation.** The maximum obligation of the United States payable under this Offer is $**32,445.00**.

   For the purposes of any future grant amendments which may increase the foregoing maximum obligation of the United States under the provisions of 49 U.S.C. § 47108(b), the following amounts are being specified for this purpose:

   $0.00 for planning

   $32,445.00 for airport development or noise program implementation

   $0.00 for land acquisition.

2. **Ineligible or Unallowable Costs.** The Sponsor must not include any costs in the project that the FAA has determined to be ineligible or unallowable.

3. **Determining the Final Federal Share of Costs.** The United States' share of allowable project costs will be made in accordance with the regulations, policies and procedures of the Secretary. Final determination of the United States' share will be based upon the final audit of the total amount of allowable project costs and settlement will be made for any upward or downward adjustments to the Federal share of costs.

4. **Completing the Project Without Delay and in Conformance with Requirements.** The Sponsor must carry out and complete the project without undue delays and in accordance with this agreement, and the regulations, policies and procedures of the Secretary. The Sponsor also agrees to comply with the assurances which are part of this agreement.

5. **Amendments or Withdrawals before Grant Acceptance.** The FAA reserves the right to amend or withdraw this offer at any time prior to its acceptance by the Sponsor.

6. **Offer Expiration Date.** This offer will expire and the United States will not be obligated to pay any part of the costs of the project unless this offer has been accepted by the Sponsor on or before **July 31, 2014**, or such subsequent date as may be prescribed in writing by the FAA.

7. **Improper Use of Federal Funds.** The Sponsor must take all steps, including litigation if necessary, to recover Federal funds spent fraudulently, wastefully, or in violation of Federal antitrust statutes, or misused in any other manner in any project upon which Federal funds have been expended. For the purposes of this grant agreement, the term "Federal funds" means funds however used or dispersed by the Sponsor that were originally paid pursuant to this or any other Federal grant agreement. The Sponsor must obtain the approval of the Secretary as to any determination of the amount of the Federal share of such funds. The Sponsor must return the recovered Federal share, including funds recovered by settlement, order, or judgment, to the Secretary. The Sponsor must furnish to the Secretary, upon request, all documents and records pertaining to the determination of the amount of the Federal share or to any settlement, litigation, negotiation, or other efforts taken to recover such funds. All settlements or other final positions of the Sponsor, in court or otherwise, involving the recovery of such Federal share require advance approval by the Secretary.

8. **United States Not Liable for Damage or Injury.** The United States is not be responsible or liable for damage to property or injury to persons which may arise from, or be incident to, compliance with this grant agreement.

9. **System for Award Management (SAM) Registration And Universal Identifier.**

   A. Requirement for System for Award Management (SAM): Unless the Sponsor is exempted from this requirement under 2 CFR 25.110, the Sponsor must maintain the currency of its information in the SAM until the Sponsor submits the final financial report required under this grant, or receives the final payment, whichever is later. This requires that the Sponsor review and update the information at least annually after the initial registration and more frequently if required by changes in information or another award term. Additional information about registration procedures may be found at the SAM website (currently at http://www.sam.gov).

   B. Requirement for Data Universal Numbering System (DUNS) Numbers

      1. The Sponsor must notify potential subrecipient that it cannot receive a contract unless it has provided its DUNS number to the Sponsor. A subrecipient means a consultant, contractor, or other entity that enters into an agreement with the Sponsor to provide services or other work to further this project, and is accountable to the Sponsor for the use of the Federal funds provided by the agreement, which may be provided through any legal agreement, including a contract.

      2. The Sponsor may not make an award to a subrecipient unless the subrecipient has provided its DUNS number to the Sponsor.

      3. Data Universal Numbering System: DUNS number means the nine-digit number established and assigned by Dun and Bradstreet, Inc. (D & B) to uniquely identify business entities. A DUNS number may be obtained from D & B by telephone (currently 866–492–0280) or the Internet (currently at http://fedgov.dnb.com/webform).

10. **Electronic Grant Payment(s).** Unless otherwise directed by the FAA, the Sponsor must make each payment request under this agreement electronically via the Delphi eInvoicing System for Department of Transportation (DOT) Financial Assistance Awardees.

11. **Informal Letter Amendment of AIP Projects.** If, during the life of the project, the FAA determines that the maximum grant obligation of the United States exceeds the expected needs of the Sponsor by $25,000 or five percent (5%), whichever is greater, the FAA can issue a letter to the Sponsor unilaterally reducing the maximum obligation. The FAA can also issue a letter to the Sponsor increasing the maximum obligation if there is an overrun in the total actual eligible and allowable project costs to cover the amount of the overrun provided it will not exceed the statutory limitations for grant amendments. If the FAA determines that a change in the grant description is advantageous and in the best interests of the United States, the FAA can issue a letter to the Sponsor amending the grant description.

    By issuing an Informal Letter Amendment, the FAA has changed the grant amount or grant description to the amount or description in the letter.

12. **Air and Water Quality.** The Sponsor is required to comply with all applicable air and water quality standards for all projects in this grant. If the Sponsor fails to comply with this requirement, the FAA may suspend, cancel, or terminate this grant.

13. **Financial Reporting and Payment Requirements.** The Sponsor will comply with all federal financial reporting requirements and payment requirements, including submittal of timely and accurate reports.

14. **Buy American.** Unless otherwise approved in advance by the FAA, the Sponsor will not acquire or permit any contractor or subcontractor to acquire any steel or manufactured products produced outside the United States to be used for any project for which funds are provided under this grant. The Sponsor will include a provision implementing Buy American in every contract.

15. **Maximum Obligation Increase For Nonprimary Airports.** In accordance with 49 U.S.C. § 47108(b), as amended, the maximum obligation of the United States, as stated in Condition No. 1 of this Grant Offer:
    A. may not be increased for a planning project;
    B. may be increased by not more than 15 percent for development projects;
    C. may be increased by not more than 15 percent or by an amount not to exceed 25 percent of the total increase in allowable costs attributable to the acquisition of land or interests in land, whichever is greater, based on current credible appraisals or a court award in a condemnation proceeding.

16. **Audits for Public Sponsors.** The Sponsor must provide for a Single Audit in accordance with 2 CFR Part 200. The Sponsor must submit the Single Audit reporting package to the Federal Audit Clearinghouse on the Federal Audit Clearinghouse's Internet Data Entry System at http://harvester.census.gov/facweb/. The Sponsor must also provide one copy of the completed 2 CFR Part 200 audit to the Airports District Office.

17. **Suspension or Debarment.** The Sponsor must inform the FAA when the Sponsor suspends or debars a contractor, person, or entity.

18. **Ban on Texting When Driving.**
    A. In accordance with Executive Order 13513, Federal Leadership on Reducing Text Messaging While Driving, October 1, 2009, and DOT Order 3902.10, Text Messaging While Driving, December 30, 2009, the Sponsor is encouraged to:
        1. Adopt and enforce workplace safety policies to decrease crashes caused by distracted drivers including policies to ban text messaging while driving when performing any work for, or on behalf of, the Federal government, including work relating to a grant or subgrant.
        2. Conduct workplace safety initiatives in a manner commensurate with the size of the business, such as:
            a. Establishment of new rules and programs or re-evaluation of existing programs to prohibit text messaging while driving; and
            b. Education, awareness, and other outreach to employees about the safety risks associated with texting while driving.
    B. The Sponsor must insert the substance of this clause on banning texting when driving in all subgrants, contracts and subcontracts

19. **Trafficking in Persons.**
    A. Prohibitions: The prohibitions against trafficking in persons (Prohibitions) that apply to any entity other than a State, local government, Indian tribe, or foreign public entity. This includes private Sponsors, public Sponsor employees, subrecipients of private or public Sponsors (private entity) are:
        1. Engaging in severe forms of trafficking in persons during the period of time that the agreement is in effect;
        2. Procuring a commercial sex act during the period of time that the agreement is in effect; or

3. Using forced labor in the performance of the agreement, including subcontracts or subagreements under the agreement.

B. In addition to all other remedies for noncompliance that are available to the FAA, Section 106(g) of the Trafficking Victims Protection Act of 2000 (TVPA), as amended (22 U.S.C. 7104(g)), allows the FAA to unilaterally terminate this agreement, without penalty, if a private entity –

1. Is determined to have violated the Prohibitions; or
2. Has an employee who the FAA determines has violated the Prohibitions through conduct that is either—
   a. Associated with performance under this agreement; or
   b. Imputed to the Sponsor or subrecipient using 2 CFR part 180, "OMB Guidelines to Agencies on Governmentwide Debarment and Suspension (Nonprocurement)," as implemented by the FAA at 49 CFR Part 29.

20. Exhibit A Incorporated by Reference. The Exhibit "A" updated July 1, 2011, filed with AIP Project 3-05-0020-040-2011, is incorporated herein by reference.

The Sponsor's acceptance of this Offer and ratification and adoption of the Project Application incorporated herein shall be evidenced by execution of this instrument by the Sponsor, as hereinafter provided, and this Offer and Acceptance shall comprise a Grant Agreement, as provided by the Act, constituting the contractual obligations and rights of the United States and the Sponsor with respect to the accomplishment of the Project and compliance with the assurances and conditions as provided herein. Such Grant Agreement shall become effective upon the Sponsor's acceptance of this Offer.

SPECIAL CONDITIONS

1. **PLANS & SPECIFICATIONS APPROVAL BASED UPON CERTIFICATION**: The FAA and the Sponsor agree that the FAA approval of the Sponsor's Plans and Specification is based primarily upon the Sponsor's certification to carry out the project in accordance with policies, standards, and specifications approved by the FAA. The Sponsor understands that:
   1) The Sponsor's certification does not relieve the Sponsor of the requirement to obtain prior FAA

approval for modifications to any AIP standards or to notify the FAA of any limitations to competition within the project;

2)The FAA's acceptance of a Sponsor's certification does not limit the FAA from reviewing appropriate project documentation for the purpose of validating the certification statements;

3) if the FAA determines that the Sponsor has not complied with their certification statements, the FAA will review the associated project costs to determine whether such costs are allowable under AIP.

UNITED STATES OF AMERICA
FEDERAL AVIATION ADMINISTRATION

Glenn A. Boles

Manager, AR/OK Airports Development Office

PART II - ACCEPTANCE

The Sponsor does hereby ratify and adopt all assurances, statements, representations, warranties, covenants, and agreements contained in the Project Application and incorporated materials referred to in the foregoing Offer, and does hereby accept this Offer and by such acceptance agrees to comply with all of the terms and conditions in this Offer and in the Project Application.

I declare under penalty of perjury that the foregoing is true and correct.[1]
Executed this _____ day of _____, _____.

_____
(Name of Sponsor)

_____
(Signature of Sponsor's Designated Official Representative)

By: _____
(Typed Name of Sponsor's Designated Official Representative)

Title: _____
(Title of Sponsor)

CERTIFICATE OF SPONSOR'S ATTORNEY

I, _____, acting as Attorney for the Sponsor do hereby certify:

That in my opinion the Sponsor is empowered to enter into the foregoing Grant Agreement under the laws of the State of_____. Further, I have examined the foregoing Grant Agreement and the actions taken by said Sponsor and Sponsor's official representative has been duly authorized and that the execution thereof is in all respects due and proper and in accordance with the laws of the said State and the Act. In addition, for grants involving projects to be carried out on property not owned by the Sponsor, there are no legal impediments that will prevent full performance by the Sponsor. Further, it is my opinion that the said Grant Agreement constitutes a legal and binding obligation of the Sponsor in accordance with the terms thereof.

Dated at _____ this _____ day of _____,_____.

By _____
(Signature of Sponsor's Attorney)

[1] Knowingly and willfully providing false information to the Federal government is a violation of 18 U.S.C. Section 1001 (False Statements) and could subject you to fines, imprisonment, or both.

FAA
Airports

Current FAA Advisory Circulars Required for Use in AIP Funded and PFC Approved Projects

Updated: 3/20/2014

View the most current versions of these ACs and any associated changes at:
http://www.faa.gov/airports/resources/advisory_circulars

NUMBER	TITLE
70/7460-1K	Obstruction Marking and Lighting
150/5020-1	Noise Control and Compatibility Planning for Airports
150/5070-6B Change 1	Airport Master Plans
150/5070-7	The Airport System Planning Process
150/5100-13B	Development of State Standards for Nonprimary Airports
150/5200-28D	Notices to Airmen (NOTAMS) for Airport Operators
150/5200-30C Change 1	Airport Winter Safety And Operations
150/5200-31C Change 2	Airport Emergency Plan
150/5210-5D	Painting, Marking, and Lighting of Vehicles Used on an Airport
150/5210-7D	Aircraft Rescue and Fire Fighting Communications
150/5210-13C	Airport Water Rescue Plans and Equipment
150/5210-14B	Aircraft Rescue Fire Fighting Equipment, Tools and Clothing
150/5210-15A	Aircraft Rescue and Firefighting Station Building Design
150/5210-18A	Systems for Interactive Training of Airport Personnel

NUMBER	TITLE
150/5210-19A	Driver's Enhanced Vision System (DEVS) Ground Vehicle Operations on Airports
150/5220-10E	Guide Specification for Aircraft Rescue and Fire Fighting (ARFF) Vehicles
150/5220-16D	Automated Weather Observing Systems (AWOS) for Non-Federal Applications
150/5220-17B	Aircraft Rescue and Fire Fighting (ARFF) Training Facilities
150/5220-18A	Buildings for Storage and Maintenance of Airport Snow and Ice Control Equipment and Materials
AC 150/5220-20 Change 1	Airport Snow and Ice Control Equipment
150/5220-21C	Aircraft Boarding Equipment
150/5220-22B	Engineered Materials Arresting Systems (EMAS) for Aircraft Overruns
150/5220-23	Frangible Connections
150/5220-24	Foreign Object Debris Detection Equipment
150/5220-25	Airport Avian Radar Systems
150/5220-26 Change 1	Airport Ground Vehicle Automatic Dependent Surveillance - Broadcast (ADS-B) Out Squitter Equipment
150/5300-7B	FAA Policy on Facility Relocations Occasioned by Airport Improvements or Changes
150/5300-13A Change 1	Airport Design
150/5300-14C	Design of Aircraft Deicing Facilities
150/5300-16A	General Guidance and Specifications for Aeronautical Surveys: Establishment of Geodetic Control and Submission to the National Geodetic Survey
150/5300-17C	Standards for Using Remote Sensing Technologies in Airport Surveys
150/5300-18B Change 1	General Guidance and Specifications for Submission of Aeronautical Surveys to NGS: Field Data Collection and Geographic Information System (GIS) Standards
150/5320-5D	Surface Drainage Design
150/5320-6E	Airport Pavement Design and Evaluation

NUMBER	TITLE
150/5320-12C	Measurement, Construction, and Maintenance of Skid Resistant Airport Pavement Surfaces
150/5320-15A	Management of Airport Industrial Waste
150/5235-4B	Runway Length Requirements for Airport Design
150/5335-5C	Standardized Method of Reporting Airport Pavement Strength – PCN (Draft approved for use)
150/5340-1L	Standards for Airport Markings
150/5340-5D	Segmented Circle Airport Marker System
150/5340-18F	Standards for Airport Sign Systems
150/5340-30G	Design and Installation Details for Airport Visual Aids
150/5345-3G	Specification for L-821, Panels for the Control of Airport Lighting
150/5345-5B	Circuit Selector Switch
150/5345-7F	Specification for L-824 Underground Electrical Cable for Airport Lighting Circuits
150/5345-10G	Specification for Constant Current Regulators and Regulator Monitors
150/5345-12F	Specification for Airport and Heliport Beacons
150/5345-13B	Specification for L-841 Auxiliary Relay Cabinet Assembly for Pilot Control of Airport Lighting Circuits
150/5345-26D	FAA Specification For L-823 Plug and Receptacle, Cable Connectors
150/5345-27E	Specification for Wind Cone Assemblies
150/5345-28G	Precision Approach Path Indicator (PAPI) Systems
150/5345-39D	Specification for L-853, Runway and Taxiway Retro reflective Markers
150/5345-42G	Specification for Airport Light Bases, Transformer Housings, Junction Boxes, and Accessories
150/5345-43G	Specification for Obstruction Lighting Equipment
150/5345-44J	Specification for Runway and Taxiway Signs
150/5345-45C	Low-Impact Resistant (LIR) Structures

NUMBER	TITLE
150/5345-46D	Specification for Runway and Taxiway Light Fixtures
150/5345-47C	Specification for Series to Series Isolation Transformers for Airport Lighting Systems
150/5345-49C	Specification L-854, Radio Control Equipment
150/5345-50B	Specification for Portable Runway and Taxiway Lights
150/5345-51B	Specification for Discharge-Type Flashing Light Equipment
150/5345-52A	Generic Visual Glideslope Indicators (GVGI)
150/5345-53D	Airport Lighting Equipment Certification Program
150/5345-54B	Specification for L-884, Power and Control Unit for Land and Hold Short Lighting Systems
150/5345-55A	Specification for L-893, Lighted Visual Aid to Indicate Temporary Runway Closure
150/5345-56B	Specification for L-890 Airport Lighting Control and Monitoring System (ALCMS)
150/5360-12F	Airport Signing and Graphics
150/5360-13 Change 1	Planning and Design Guidelines for Airport Terminal Facilities
150/5360-14	Access to Airports By Individuals With Disabilities
150/5370-2F	Operational Safety on Airports During Construction
150/5370-10F	Standards for Specifying Construction of Airports
150/5370-11B	Use of Nondestructive Testing in the Evaluation of Airport Pavements
150/5370-13A	Off-Peak Construction of Airport Pavements Using Hot-Mix Asphalt
150/5370-15B	Airside Applications for Artificial Turf
150/5370-16	Rapid Construction of Rigid (Portland Cement Concrete) Airfield Pavements
150/5370-17	Airside Use of Heated Pavement Systems
150/5380-6B	Guidelines and Procedures for Maintenance of Airport Pavements
150/5390-2C	Heliport Design

NUMBER	TITLE
150/5395-1A	Seaplane Bases

THE FOLLOWING ADDITIONAL APPLY TO AIP PROJECTS ONLY

Updated: 3/7/2014

NUMBER	TITLE
150/5100-14D	Architectural, Engineering, and Planning Consultant Services for Airport Grant Projects
150/5100-17 Changes 1 - 6	Land Acquisition and Relocation Assistance for Airport Improvement Program Assisted Projects
150/5300-9B	Predesign, Prebid, and Preconstruction Conferences for Airport Grant Projects
150/5300-15A	Use of Value Engineering for Engineering Design of Airports Grant Projects
150/5320-17	Airfield Pavement Surface Evaluation and Rating (PASER) Manuals
150/5370-6D	Construction Progress and Inspection Report – Airport Grant Program
150/5370-12A	Quality Control of Construction for Airport Grant Projects
150/5380-7A	Airport Pavement Management Program

FAA
Airports

ASSURANCES

Airport Sponsors

A. General.

1. These assurances shall be complied with in the performance of grant agreements for airport development, airport planning, and noise compatibility program grants for airport sponsors.
2. These assurances are required to be submitted as part of the project application by sponsors requesting funds under the provisions of Title 49, U.S.C., subtitle VII, as amended. As used herein, the term "public agency sponsor" means a public agency with control of a public-use airport; the term "private sponsor" means a private owner of a public-use airport; and the term "sponsor" includes both public agency sponsors and private sponsors.
3. Upon acceptance of this grant offer by the sponsor, these assurances are incorporated in and become part of this grant agreement.

B. Duration and Applicability.

1. **Airport development or Noise Compatibility Program Projects Undertaken by a Public Agency Sponsor.**

   The terms, conditions and assurances of this grant agreement shall remain in full force and effect throughout the useful life of the facilities developed or equipment acquired for an airport development or noise compatibility program project, or throughout the useful life of the project items installed within a facility under a noise compatibility program project, but in any event not to exceed twenty (20) years from the date of acceptance of a grant offer of Federal funds for the project. However, there shall be no limit on the duration of the assurances regarding Exclusive Rights and Airport Revenue so long as the airport is used as an airport. There shall be no limit on the duration of the terms, conditions, and assurances with respect to real property acquired with federal funds. Furthermore, the duration of the Civil Rights assurance shall be specified in the assurances.

2. **Airport Development or Noise Compatibility Projects Undertaken by a Private Sponsor.**

   The preceding paragraph 1 also applies to a private sponsor except that the useful life of project items installed within a facility or the useful life of the facilities developed or equipment acquired under an airport development or noise compatibility program project shall be no less than ten (10) years from the date of acceptance of Federal aid for the project.

3. **Airport Planning Undertaken by a Sponsor.**

Unless otherwise specified in this grant agreement, only Assurances 1, 2, 3, 5, 6, 13, 18, 25, 30, 32, 33, and 34 in Section C apply to planning projects. The terms, conditions, and assurances of this grant agreement shall remain in full force and effect during the life of the project; there shall be no limit on the duration of the assurances regarding Airport Revenue so long as the airport is used as an airport.

C. Sponsor Certification.

The sponsor hereby assures and certifies, with respect to this grant that:

1. **General Federal Requirements.**

It will comply with all applicable Federal laws, regulations, executive orders, policies, guidelines, and requirements as they relate to the application, acceptance and use of Federal funds for this project including but not limited to the following:

Federal Legislation

a. Title 49, U.S.C., subtitle VII, as amended.
b. Davis-Bacon Act - 40 U.S.C. 276(a), et seq.[1]
c. Federal Fair Labor Standards Act - 29 U.S.C. 201, et seq.
d. Hatch Act – 5 U.S.C. 1501, et seq.[2]
e. Uniform Relocation Assistance and Real Property Acquisition Policies Act of 1970 Title 42 U.S.C. 4601, et seq.[1 2]
f. National Historic Preservation Act of 1966 - Section 106 - 16 U.S.C. 470(f).[1]
g. Archeological and Historic Preservation Act of 1974 - 16 U.S.C. 469 through 469c.[1]
h. Native Americans Grave Repatriation Act - 25 U.S.C. Section 3001, et seq.
i. Clean Air Act, P.L. 90-148, as amended.
j. Coastal Zone Management Act, P.L. 93-205, as amended.
k. Flood Disaster Protection Act of 1973 - Section 102(a) - 42 U.S.C. 4012a.[1]
l. Title 49, U.S.C., Section 303, (formerly known as Section 4(f))
m. Rehabilitation Act of 1973 - 29 U.S.C. 794.
n. Title VI of the Civil Rights Act of 1964 (42 U.S.C. § 2000d et seq., 78 stat. 252) (prohibits discrimination on the basis of race, color, national origin);
o. Americans with Disabilities Act of 1990, as amended, (42 U.S.C. § 12101 et seq.), prohibits discrimination on the basis of disability).
p. Age Discrimination Act of 1975 - 42 U.S.C. 6101, et seq.
q. American Indian Religious Freedom Act, P.L. 95-341, as amended.
r. Architectural Barriers Act of 1968 -42 U.S.C. 4151, et seq.[1]
s. Power plant and Industrial Fuel Use Act of 1978 - Section 403- 2 U.S.C. 8373.[1]
t. Contract Work Hours and Safety Standards Act - 40 U.S.C. 327, et seq.[1]
u. Copeland Anti-kickback Act - 18 U.S.C. 874.1
v. National Environmental Policy Act of 1969 - 42 U.S.C. 4321, et seq.[1]
w. Wild and Scenic Rivers Act, P.L. 90-542, as amended.
x. Single Audit Act of 1984 - 31 U.S.C. 7501, et seq.[2]
y. Drug-Free Workplace Act of 1988 - 41 U.S.C. 702 through 706.

z. The Federal Funding Accountability and Transparency Act of 2006, as amended (Pub. L. 109-282, as amended by section 6202 of Pub. L. 110-252).

Executive Orders

a. Executive Order 11246 - Equal Employment Opportunity[1]
b. Executive Order 11990 - Protection of Wetlands
c. Executive Order 11998 – Flood Plain Management
d. Executive Order 12372 - Intergovernmental Review of Federal Programs
e. Executive Order 12699 - Seismic Safety of Federal and Federally Assisted New Building Construction[1]
f. Executive Order 12898 - Environmental Justice

Federal Regulations

a. 2 CFR Part 180 - OMB Guidelines to Agencies on Governmentwide Debarment and Suspension (Nonprocurement).
b. 2 CFR Part 200, Uniform Administrative Requirements, Cost Principles, and Audit Requirements for Federal Awards. [OMB Circular A-87 Cost Principles Applicable to Grants and Contracts with State and Local Governments, and OMB Circular A-133 - Audits of States, Local Governments, and Non-Profit Organizations].[4, 5, 6]
c. 2 CFR Part 1200 – Nonprocurement Suspension and Debarment
d. 14 CFR Part 13 - Investigative and Enforcement Procedures14 CFR Part 16 - Rules of Practice For Federally Assisted Airport Enforcement Proceedings.
e. 14 CFR Part 150 - Airport noise compatibility planning.
f. 28 CFR Part 35- Discrimination on the Basis of Disability in State and Local Government Services.
g. 28 CFR § 50.3 - U.S. Department of Justice Guidelines for Enforcement of Title VI of the Civil Rights Act of 1964.
h. 29 CFR Part 1 - Procedures for predetermination of wage rates.[1]
i. 29 CFR Part 3 - Contractors and subcontractors on public building or public work financed in whole or part by loans or grants from the United States.[1]
j. 29 CFR Part 5 - Labor standards provisions applicable to contracts covering federally financed and assisted construction (also labor standards provisions applicable to non-construction contracts subject to the Contract Work Hours and Safety Standards Act).[1]
k. 41 CFR Part 60 - Office of Federal Contract Compliance Programs, Equal Employment Opportunity, Department of Labor (Federal and federally assisted contracting requirements).[1]
l. 49 CFR Part 18 - Uniform administrative requirements for grants and cooperative agreements to state and local governments.[3]
m. 49 CFR Part 20 - New restrictions on lobbying.
n. 49 CFR Part 21 – Nondiscrimination in federally-assisted programs of the Department of Transportation - effectuation of Title VI of the Civil Rights Act of 1964.
o. 49 CFR Part 23 - Participation by Disadvantage Business Enterprise in Airport Concessions.

p. 49 CFR Part 24 – Uniform Relocation Assistance and Real Property Acquisition for Federal and Federally Assisted Programs.[1 2]
q. 49 CFR Part 26 – Participation by Disadvantaged Business Enterprises in Department of Transportation Programs.
r. 49 CFR Part 27 – Nondiscrimination on the Basis of Handicap in Programs and Activities Receiving or Benefiting from Federal Financial Assistance.[1]
s. 49 CFR Part 28 – Enforcement of Nondiscrimination on the Basis of Handicap in Programs or Activities conducted by the Department of Transportation.
t. 49 CFR Part 30 - Denial of public works contracts to suppliers of goods and services of countries that deny procurement market access to U.S. contractors.
u. 49 CFR Part 32 – Governmentwide Requirements for Drug-Free Workplace (Financial Assistance)
v. 49 CFR Part 37 – Transportation Services for Individuals with Disabilities (ADA).
w. 49 CFR Part 41 - Seismic safety of Federal and federally assisted or regulated new building construction.

Specific Assurances

Specific assurances required to be included in grant agreements by any of the above laws, regulations or circulars are incorporated by reference in this grant agreement.

Footnotes to Assurance C.1.

[1] These laws do not apply to airport planning sponsors.

[2] These laws do not apply to private sponsors.

[3] 49 CFR Part 18 and 2 CFR Part 200 contain requirements for State and Local Governments receiving Federal assistance. Any requirement levied upon State and Local Governments by this regulation and circular shall also be applicable to private sponsors receiving Federal assistance under Title 49, United States Code.

[4] On December 26, 2013 at 78 FR 78590, the Office of Management and Budget (OMB) issued the Uniform Administrative Requirements, Cost Principles, and Audit Requirements for Federal Awards in 2 CFR Part 200. 2 CFR Part 200 replaces and combines the former Uniform Administrative Requirements for Grants (OMB Circular A-102 and Circular A-110 or 2 CFR Part 215 or Circular) as well as the Cost Principles (Circulars A-21 or 2 CFR part 220; Circular A-87 or 2 CFR part 225; and A-122, 2 CFR part 230). Additionally it replaces Circular A-133 guidance on the Single Annual Audit. In accordance with 2 CFR section 200.110, the standards set forth in Part 200 which affect administration of Federal awards issued by Federal agencies become effective once implemented by Federal agencies or when any future amendment to this Part becomes final. Federal agencies, including the Department of Transportation, must implement the policies and procedures applicable to Federal awards by promulgating a regulation to be effective by December 26, 2014 unless different provisions are required by statute or approved by OMB.

[5] Cost principles established in 2 CFR part 200 subpart E must be used as guidelines for determining the eligibility of specific types of expenses.

[6] Audit requirements established in 2 CFR part 200 subpart F are the guidelines for audits.

2. **Responsibility and Authority of the Sponsor.**

   a. Public Agency Sponsor:

   It has legal authority to apply for this grant, and to finance and carry out the proposed project; that a resolution, motion or similar action has been duly adopted or passed as an official act of the applicant's governing body authorizing the filing of the application, including all understandings and assurances contained therein, and directing and authorizing the person identified as the official representative of the applicant to act in connection with the application and to provide such additional information as may be required.

   b. Private Sponsor:

   It has legal authority to apply for this grant and to finance and carry out the proposed project and comply with all terms, conditions, and assurances of this grant agreement. It shall designate an official representative and shall in writing direct and authorize that person to file this application, including all understandings and assurances contained therein; to act in connection with this application; and to provide such additional information as may be required.

3. **Sponsor Fund Availability.**

   It has sufficient funds available for that portion of the project costs which are not to be paid by the United States. It has sufficient funds available to assure operation and maintenance of items funded under this grant agreement which it will own or control.

4. **Good Title.**

   a. It, a public agency or the Federal government, holds good title, satisfactory to the Secretary, to the landing area of the airport or site thereof, or will give assurance satisfactory to the Secretary that good title will be acquired.

   b. For noise compatibility program projects to be carried out on the property of the sponsor, it holds good title satisfactory to the Secretary to that portion of the property upon which Federal funds will be expended or will give assurance to the Secretary that good title will be obtained.

5. **Preserving Rights and Powers.**

   a. It will not take or permit any action which would operate to deprive it of any of the rights and powers necessary to perform any or all of the terms, conditions, and assurances in this grant agreement without the written approval of the Secretary, and will act promptly to acquire, extinguish or modify any outstanding rights or claims of right of others which would interfere with such performance by the sponsor. This shall be done in a manner acceptable to the Secretary.

b. It will not sell, lease, encumber, or otherwise transfer or dispose of any part of its title or other interests in the property shown on Exhibit A to this application or, for a noise compatibility program project, that portion of the property upon which Federal funds have been expended, for the duration of the terms, conditions, and assurances in this grant agreement without approval by the Secretary. If the transferee is found by the Secretary to be eligible under Title 49, United States Code, to assume the obligations of this grant agreement and to have the power, authority, and financial resources to carry out all such obligations, the sponsor shall insert in the contract or document transferring or disposing of the sponsor's interest, and make binding upon the transferee all of the terms, conditions, and assurances contained in this grant agreement.

c. For all noise compatibility program projects which are to be carried out by another unit of local government or are on property owned by a unit of local government other than the sponsor, it will enter into an agreement with that government. Except as otherwise specified by the Secretary, that agreement shall obligate that government to the same terms, conditions, and assurances that would be applicable to it if it applied directly to the FAA for a grant to undertake the noise compatibility program project. That agreement and changes thereto must be satisfactory to the Secretary. It will take steps to enforce this agreement against the local government if there is substantial non-compliance with the terms of the agreement.

d. For noise compatibility program projects to be carried out on privately owned property, it will enter into an agreement with the owner of that property which includes provisions specified by the Secretary. It will take steps to enforce this agreement against the property owner whenever there is substantial non-compliance with the terms of the agreement.

e. If the sponsor is a private sponsor, it will take steps satisfactory to the Secretary to ensure that the airport will continue to function as a public-use airport in accordance with these assurances for the duration of these assurances.

f. If an arrangement is made for management and operation of the airport by any agency or person other than the sponsor or an employee of the sponsor, the sponsor will reserve sufficient rights and authority to insure that the airport will be operated and maintained in accordance Title 49, United States Code, the regulations and the terms, conditions and assurances in this grant agreement and shall insure that such arrangement also requires compliance therewith.

g. Sponsors of commercial service airports will not permit or enter into any arrangement that results in permission for the owner or tenant of a property used as a residence, or zoned for residential use, to taxi an aircraft between that property and any location on airport. Sponsors of general aviation airports entering into any arrangement that results in permission for the owner of residential real property adjacent to or near the airport must comply with the requirements of Sec. 136 of Public Law 112-95 and the sponsor assurances.

6. **Consistency with Local Plans.**

   The project is reasonably consistent with plans (existing at the time of submission of this application) of public agencies that are authorized by the State in which the project is located to plan for the development of the area surrounding the airport.

7. **Consideration of Local Interest.**

   It has given fair consideration to the interest of communities in or near where the project may be located.

8. **Consultation with Users.**

   In making a decision to undertake any airport development project under Title 49, United States Code, it has undertaken reasonable consultations with affected parties using the airport at which project is proposed.

9. **Public Hearings.**

   In projects involving the location of an airport, an airport runway, or a major runway extension, it has afforded the opportunity for public hearings for the purpose of considering the economic, social, and environmental effects of the airport or runway location and its consistency with goals and objectives of such planning as has been carried out by the community and it shall, when requested by the Secretary, submit a copy of the transcript of such hearings to the Secretary. Further, for such projects, it has on its management board either voting representation from the communities where the project is located or has advised the communities that they have the right to petition the Secretary concerning a proposed project.

10. **Metropolitan Planning Organization.**

    In projects involving the location of an airport, an airport runway, or a major runway extension at a medium or large hub airport, the sponsor has made available to and has provided upon request to the metropolitan planning organization in the area in which the airport is located, if any, a copy of the proposed amendment to the airport layout plan to depict the project and a copy of any airport master plan in which the project is described or depicted.

11. **Pavement Preventive Maintenance.**

    With respect to a project approved after January 1, 1995, for the replacement or reconstruction of pavement at the airport, it assures or certifies that it has implemented an effective airport pavement maintenance-management program and it assures that it will use such program for the useful life of any pavement constructed, reconstructed or repaired with Federal financial assistance at the airport. It will provide such reports on pavement condition and pavement management programs as the Secretary determines may be useful.

12. **Terminal Development Prerequisites.**

    For projects which include terminal development at a public use airport, as defined in Title 49, it has, on the date of submittal of the project grant application, all the safety equipment required for certification of such airport under section 44706 of Title 49, United States Code, and all the security equipment required by rule or regulation, and

has provided for access to the passenger enplaning and deplaning area of such airport to passengers enplaning and deplaning from aircraft other than air carrier aircraft.

13. **Accounting System, Audit, and Record Keeping Requirements.**

    a. It shall keep all project accounts and records which fully disclose the amount and disposition by the recipient of the proceeds of this grant, the total cost of the project in connection with which this grant is given or used, and the amount or nature of that portion of the cost of the project supplied by other sources, and such other financial records pertinent to the project. The accounts and records shall be kept in accordance with an accounting system that will facilitate an effective audit in accordance with the Single Audit Act of 1984.

    b. It shall make available to the Secretary and the Comptroller General of the United States, or any of their duly authorized representatives, for the purpose of audit and examination, any books, documents, papers, and records of the recipient that are pertinent to this grant. The Secretary may require that an appropriate audit be conducted by a recipient. In any case in which an independent audit is made of the accounts of a sponsor relating to the disposition of the proceeds of a grant or relating to the project in connection with which this grant was given or used, it shall file a certified copy of such audit with the Comptroller General of the United States not later than six (6) months following the close of the fiscal year for which the audit was made.

14. **Minimum Wage Rates.**

    It shall include, in all contracts in excess of $2,000 for work on any projects funded under this grant agreement which involve labor, provisions establishing minimum rates of wages, to be predetermined by the Secretary of Labor, in accordance with the Davis-Bacon Act, as amended (40 U.S.C. 276a-276a-5), which contractors shall pay to skilled and unskilled labor, and such minimum rates shall be stated in the invitation for bids and shall be included in proposals or bids for the work.

15. **Veteran's Preference.**

    It shall include in all contracts for work on any project funded under this grant agreement which involve labor, such provisions as are necessary to insure that, in the employment of labor (except in executive, administrative, and supervisory positions), preference shall be given to Vietnam era veterans, Persian Gulf veterans, Afghanistan-Iraq war veterans, disabled veterans, and small business concerns owned and controlled by disabled veterans as defined in Section 47112 of Title 49, United States Code. However, this preference shall apply only where the individuals are available and qualified to perform the work to which the employment relates.

16. **Conformity to Plans and Specifications.**

    It will execute the project subject to plans, specifications, and schedules approved by the Secretary. Such plans, specifications, and schedules shall be submitted to the Secretary prior to commencement of site preparation, construction, or other performance under this grant agreement, and, upon approval of the Secretary, shall be incorporated into this grant agreement. Any modification to the approved plans,

specifications, and schedules shall also be subject to approval of the Secretary, and incorporated into this grant agreement.

17. **Construction Inspection and Approval.**

It will provide and maintain competent technical supervision at the construction site throughout the project to assure that the work conforms to the plans, specifications, and schedules approved by the Secretary for the project. It shall subject the construction work on any project contained in an approved project application to inspection and approval by the Secretary and such work shall be in accordance with regulations and procedures prescribed by the Secretary. Such regulations and procedures shall require such cost and progress reporting by the sponsor or sponsors of such project as the Secretary shall deem necessary.

18. **Planning Projects.**

In carrying out planning projects:

a. It will execute the project in accordance with the approved program narrative contained in the project application or with the modifications similarly approved.

b. It will furnish the Secretary with such periodic reports as required pertaining to the planning project and planning work activities.

c. It will include in all published material prepared in connection with the planning project a notice that the material was prepared under a grant provided by the United States.

d. It will make such material available for examination by the public, and agrees that no material prepared with funds under this project shall be subject to copyright in the United States or any other country.

e. It will give the Secretary unrestricted authority to publish, disclose, distribute, and otherwise use any of the material prepared in connection with this grant.

f. It will grant the Secretary the right to disapprove the sponsor's employment of specific consultants and their subcontractors to do all or any part of this project as well as the right to disapprove the proposed scope and cost of professional services.

g. It will grant the Secretary the right to disapprove the use of the sponsor's employees to do all or any part of the project.

h. It understands and agrees that the Secretary's approval of this project grant or the Secretary's approval of any planning material developed as part of this grant does not constitute or imply any assurance or commitment on the part of the Secretary to approve any pending or future application for a Federal airport grant.

19. **Operation and Maintenance.**

a. The airport and all facilities which are necessary to serve the aeronautical users of the airport, other than facilities owned or controlled by the United States, shall be operated at all times in a safe and serviceable condition and in accordance with the minimum standards as may be required or prescribed by applicable Federal,

state and local agencies for maintenance and operation. It will not cause or permit any activity or action thereon which would interfere with its use for airport purposes. It will suitably operate and maintain the airport and all facilities thereon or connected therewith, with due regard to climatic and flood conditions. Any proposal to temporarily close the airport for non-aeronautical purposes must first be approved by the Secretary. In furtherance of this assurance, the sponsor will have in effect arrangements for-

1) Operating the airport's aeronautical facilities whenever required;
2) Promptly marking and lighting hazards resulting from airport conditions, including temporary conditions; and
3) Promptly notifying airmen of any condition affecting aeronautical use of the airport. Nothing contained herein shall be construed to require that the airport be operated for aeronautical use during temporary periods when snow, flood or other climatic conditions interfere with such operation and maintenance. Further, nothing herein shall be construed as requiring the maintenance, repair, restoration, or replacement of any structure or facility which is substantially damaged or destroyed due to an act of God or other condition or circumstance beyond the control of the sponsor.

b. It will suitably operate and maintain noise compatibility program items that it owns or controls upon which Federal funds have been expended.

20. **Hazard Removal and Mitigation.**

It will take appropriate action to assure that such terminal airspace as is required to protect instrument and visual operations to the airport (including established minimum flight altitudes) will be adequately cleared and protected by removing, lowering, relocating, marking, or lighting or otherwise mitigating existing airport hazards and by preventing the establishment or creation of future airport hazards.

21. **Compatible Land Use.**

It will take appropriate action, to the extent reasonable, including the adoption of zoning laws, to restrict the use of land adjacent to or in the immediate vicinity of the airport to activities and purposes compatible with normal airport operations, including landing and takeoff of aircraft. In addition, if the project is for noise compatibility program implementation, it will not cause or permit any change in land use, within its jurisdiction, that will reduce its compatibility, with respect to the airport, of the noise compatibility program measures upon which Federal funds have been expended.

22. **Economic Nondiscrimination.**

a. It will make the airport available as an airport for public use on reasonable terms and without unjust discrimination to all types, kinds and classes of aeronautical activities, including commercial aeronautical activities offering services to the public at the airport.

b. In any agreement, contract, lease, or other arrangement under which a right or privilege at the airport is granted to any person, firm, or corporation to conduct or

to engage in any aeronautical activity for furnishing services to the public at the airport, the sponsor will insert and enforce provisions requiring the contractor to-

1) furnish said services on a reasonable, and not unjustly discriminatory, basis to all users thereof, and

2) charge reasonable, and not unjustly discriminatory, prices for each unit or service, provided that the contractor may be allowed to make reasonable and nondiscriminatory discounts, rebates, or other similar types of price reductions to volume purchasers.

c. Each fixed-based operator at the airport shall be subject to the same rates, fees, rentals, and other charges as are uniformly applicable to all other fixed-based operators making the same or similar uses of such airport and utilizing the same or similar facilities.

d. Each air carrier using such airport shall have the right to service itself or to use any fixed-based operator that is authorized or permitted by the airport to serve any air carrier at such airport.

e. Each air carrier using such airport (whether as a tenant, non-tenant, or subtenant of another air carrier tenant) shall be subject to such nondiscriminatory and substantially comparable rules, regulations, conditions, rates, fees, rentals, and other charges with respect to facilities directly and substantially related to providing air transportation as are applicable to all such air carriers which make similar use of such airport and utilize similar facilities, subject to reasonable classifications such as tenants or non-tenants and signatory carriers and non-signatory carriers. Classification or status as tenant or signatory shall not be unreasonably withheld by any airport provided an air carrier assumes obligations substantially similar to those already imposed on air carriers in such classification or status.

f. It will not exercise or grant any right or privilege which operates to prevent any person, firm, or corporation operating aircraft on the airport from performing any services on its own aircraft with its own employees [including, but not limited to maintenance, repair, and fueling] that it may choose to perform.

g. In the event the sponsor itself exercises any of the rights and privileges referred to in this assurance, the services involved will be provided on the same conditions as would apply to the furnishing of such services by commercial aeronautical service providers authorized by the sponsor under these provisions.

h. The sponsor may establish such reasonable, and not unjustly discriminatory, conditions to be met by all users of the airport as may be necessary for the safe and efficient operation of the airport.

i. The sponsor may prohibit or limit any given type, kind or class of aeronautical use of the airport if such action is necessary for the safe operation of the airport or necessary to serve the civil aviation needs of the public.

23. **Exclusive Rights.**

It will permit no exclusive right for the use of the airport by any person providing, or intending to provide, aeronautical services to the public. For purposes of this paragraph, the providing of the services at an airport by a single fixed-based operator shall not be construed as an exclusive right if both of the following apply:

a. It would be unreasonably costly, burdensome, or impractical for more than one fixed-based operator to provide such services, and

b. If allowing more than one fixed-based operator to provide such services would require the reduction of space leased pursuant to an existing agreement between such single fixed-based operator and such airport. It further agrees that it will not, either directly or indirectly, grant or permit any person, firm, or corporation, the exclusive right at the airport to conduct any aeronautical activities, including, but not limited to charter flights, pilot training, aircraft rental and sightseeing, aerial photography, crop dusting, aerial advertising and surveying, air carrier operations, aircraft sales and services, sale of aviation petroleum products whether or not conducted in conjunction with other aeronautical activity, repair and maintenance of aircraft, sale of aircraft parts, and any other activities which because of their direct relationship to the operation of aircraft can be regarded as an aeronautical activity, and that it will terminate any exclusive right to conduct an aeronautical activity now existing at such an airport before the grant of any assistance under Title 49, United States Code.

24. **Fee and Rental Structure.**

It will maintain a fee and rental structure for the facilities and services at the airport which will make the airport as self-sustaining as possible under the circumstances existing at the particular airport, taking into account such factors as the volume of traffic and economy of collection. No part of the Federal share of an airport development, airport planning or noise compatibility project for which a grant is made under Title 49, United States Code, the Airport and Airway Improvement Act of 1982, the Federal Airport Act or the Airport and Airway Development Act of 1970 shall be included in the rate basis in establishing fees, rates, and charges for users of that airport.

25. **Airport Revenues.**

a. All revenues generated by the airport and any local taxes on aviation fuel established after December 30, 1987, will be expended by it for the capital or operating costs of the airport; the local airport system; or other local facilities which are owned or operated by the owner or operator of the airport and which are directly and substantially related to the actual air transportation of passengers or property; or for noise mitigation purposes on or off the airport. The following exceptions apply to this paragraph:

1) If covenants or assurances in debt obligations issued before September 3, 1982, by the owner or operator of the airport, or provisions enacted before September 3, 1982, in governing statutes controlling the owner or operator's financing, provide for the use of the revenues from any of the airport owner or

operator's facilities, including the airport, to support not only the airport but also the airport owner or operator's general debt obligations or other facilities, then this limitation on the use of all revenues generated by the airport (and, in the case of a public airport, local taxes on aviation fuel) shall not apply.

2) If the Secretary approves the sale of a privately owned airport to a public sponsor and provides funding for any portion of the public sponsor's acquisition of land, this limitation on the use of all revenues generated by the sale shall not apply to certain proceeds from the sale. This is conditioned on repayment to the Secretary by the private owner of an amount equal to the remaining unamortized portion (amortized over a 20-year period) of any airport improvement grant made to the private owner for any purpose other than land acquisition on or after October 1, 1996, plus an amount equal to the federal share of the current fair market value of any land acquired with an airport improvement grant made to that airport on or after October 1, 1996.

3) Certain revenue derived from or generated by mineral extraction, production, lease, or other means at a general aviation airport (as defined at Section 47102 of title 49 United States Code), if the FAA determines the airport sponsor meets the requirements set forth in Sec. 813 of Public Law 112-95.

b. As part of the annual audit required under the Single Audit Act of 1984, the sponsor will direct that the audit will review, and the resulting audit report will provide an opinion concerning, the use of airport revenue and taxes in paragraph (a), and indicating whether funds paid or transferred to the owner or operator are paid or transferred in a manner consistent with Title 49, United States Code and any other applicable provision of law, including any regulation promulgated by the Secretary or Administrator.

c. Any civil penalties or other sanctions will be imposed for violation of this assurance in accordance with the provisions of Section 47107 of Title 49, United States Code.

26. **Reports and Inspections.**

It will:

a. submit to the Secretary such annual or special financial and operations reports as the Secretary may reasonably request and make such reports available to the public; make available to the public at reasonable times and places a report of the airport budget in a format prescribed by the Secretary;

b. for airport development projects, make the airport and all airport records and documents affecting the airport, including deeds, leases, operation and use agreements, regulations and other instruments, available for inspection by any duly authorized agent of the Secretary upon reasonable request;

c. for noise compatibility program projects, make records and documents relating to the project and continued compliance with the terms, conditions, and assurances of this grant agreement including deeds, leases, agreements, regulations, and other instruments, available for inspection by any duly authorized agent of the Secretary upon reasonable request; and

d. in a format and time prescribed by the Secretary, provide to the Secretary and make available to the public following each of its fiscal years, an annual report listing in detail:

1) all amounts paid by the airport to any other unit of government and the purposes for which each such payment was made; and

2) all services and property provided by the airport to other units of government and the amount of compensation received for provision of each such service and property.

27. **Use by Government Aircraft.**

It will make available all of the facilities of the airport developed with Federal financial assistance and all those usable for landing and takeoff of aircraft to the United States for use by Government aircraft in common with other aircraft at all times without charge, except, if the use by Government aircraft is substantial, charge may be made for a reasonable share, proportional to such use, for the cost of operating and maintaining the facilities used. Unless otherwise determined by the Secretary, or otherwise agreed to by the sponsor and the using agency, substantial use of an airport by Government aircraft will be considered to exist when operations of such aircraft are in excess of those which, in the opinion of the Secretary, would unduly interfere with use of the landing areas by other authorized aircraft, or during any calendar month that –

a. Five (5) or more Government aircraft are regularly based at the airport or on land adjacent thereto; or

b. The total number of movements (counting each landing as a movement) of Government aircraft is 300 or more, or the gross accumulative weight of Government aircraft using the airport (the total movement of Government aircraft multiplied by gross weights of such aircraft) is in excess of five million pounds.

28. **Land for Federal Facilities.**

It will furnish without cost to the Federal Government for use in connection with any air traffic control or air navigation activities, or weather-reporting and communication activities related to air traffic control, any areas of land or water, or estate therein, or rights in buildings of the sponsor as the Secretary considers necessary or desirable for construction, operation, and maintenance at Federal expense of space or facilities for such purposes. Such areas or any portion thereof will be made available as provided herein within four months after receipt of a written request from the Secretary.

29. **Airport Layout Plan.**

a. It will keep up to date at all times an airport layout plan of the airport showing

1) boundaries of the airport and all proposed additions thereto, together with the boundaries of all offsite areas owned or controlled by the sponsor for airport purposes and proposed additions thereto;

2) the location and nature of all existing and proposed airport facilities and structures (such as runways, taxiways, aprons, terminal buildings, hangars and

roads), including all proposed extensions and reductions of existing airport facilities;

3) the location of all existing and proposed nonaviation areas and of all existing improvements thereon; and

4) all proposed and existing access points used to taxi aircraft across the airport's property boundary. Such airport layout plans and each amendment, revision, or modification thereof, shall be subject to the approval of the Secretary which approval shall be evidenced by the signature of a duly authorized representative of the Secretary on the face of the airport layout plan. The sponsor will not make or permit any changes or alterations in the airport or any of its facilities which are not in conformity with the airport layout plan as approved by the Secretary and which might, in the opinion of the Secretary, adversely affect the safety, utility or efficiency of the airport.

b. If a change or alteration in the airport or the facilities is made which the Secretary determines adversely affects the safety, utility, or efficiency of any federally owned, leased, or funded property on or off the airport and which is not in conformity with the airport layout plan as approved by the Secretary, the owner or operator will, if requested, by the Secretary (1) eliminate such adverse effect in a manner approved by the Secretary; or (2) bear all costs of relocating such property (or replacement thereof) to a site acceptable to the Secretary and all costs of restoring such property (or replacement thereof) to the level of safety, utility, efficiency, and cost of operation existing before the unapproved change in the airport or its facilities except in the case of a relocation or replacement of an existing airport facility due to a change in the Secretary's design standards beyond the control of the airport sponsor.

30. **Civil Rights.**

It will promptly take any measures necessary to ensure that no person in the United States shall, on the grounds of race, creed, color, national origin, sex, age, or disability be excluded from participation in, be denied the benefits of, or be otherwise subjected to discrimination in any activity conducted with, or benefiting from, funds received from this grant.

a. Using the definitions of activity, facility and program as found and defined in §§ 21.23 (b) and 21.23 (e) of 49 CFR § 21, the sponsor will facilitate all programs, operate all facilities, or conduct all programs in compliance with all non-discrimination requirements imposed by, or pursuant to these assurances.

b. Applicability

1) Programs and Activities. If the sponsor has received a grant (or other federal assistance) for any of the sponsor's program or activities, these requirements extend to all of the sponsor's programs and activities.

2) Facilities. Where it receives a grant or other federal financial assistance to construct, expand, renovate, remodel, alter or acquire a facility, or part of a facility, the assurance extends to the entire facility and facilities operated in connection therewith.

3) Real Property. Where the sponsor receives a grant or other Federal financial assistance in the form of, or for the acquisition of real property or an interest in real property, the assurance will extend to rights to space on, over, or under such property.

c. Duration.

The sponsor agrees that it is obligated to this assurance for the period during which Federal financial assistance is extended to the program, except where the Federal financial assistance is to provide, or is in the form of, personal property, or real property, or interest therein, or structures or improvements thereon, in which case the assurance obligates the sponsor, or any transferee for the longer of the following periods:

1) So long as the airport is used as an airport, or for another purpose involving the provision of similar services or benefits; or

2) So long as the sponsor retains ownership or possession of the property.

d. Required Solicitation Language. It will include the following notification in all solicitations for bids, Requests For Proposals for work, or material under this grant agreement and in all proposals for agreements, including airport concessions, regardless of funding source:

"The **(Name of Sponsor)**, in accordance with the provisions of Title VI of the Civil Rights Act of 1964 (78 Stat. 252, 42 U.S.C. §§ 2000d to 2000d-4) and the Regulations, hereby notifies all bidders that it will affirmatively ensure that any contract entered into pursuant to this advertisement, disadvantaged business enterprises and airport concession disadvantaged business enterprises will be afforded full and fair opportunity to submit bids in response to this invitation and will not be discriminated against on the grounds of race, color, or national origin in consideration for an award."

e. Required Contract Provisions.

1) It will insert the non-discrimination contract clauses requiring compliance with the acts and regulations relative to non-discrimination in Federally-assisted programs of the DOT, and incorporating the acts and regulations into the contracts by reference in every contract or agreement subject to the non-discrimination in Federally-assisted programs of the DOT acts and regulations.

2) It will include a list of the pertinent non-discrimination authorities in every contract that is subject to the non-discrimination acts and regulations.

3) It will insert non-discrimination contract clauses as a covenant running with the land, in any deed from the United States effecting or recording a transfer of real property, structures, use, or improvements thereon or interest therein to a sponsor.

4) It will insert non-discrimination contract clauses prohibiting discrimination on the basis of race, color, national origin, creed, sex, age, or handicap as a

covenant running with the land, in any future deeds, leases, license, permits, or similar instruments entered into by the sponsor with other parties:

a) For the subsequent transfer of real property acquired or improved under the applicable activity, project, or program; and

b) For the construction or use of, or access to, space on, over, or under real property acquired or improved under the applicable activity, project, or program.

f. It will provide for such methods of administration for the program as are found by the Secretary to give reasonable guarantee that it, other recipients, sub-recipients, sub-grantees, contractors, subcontractors, consultants, transferees, successors in interest, and other participants of Federal financial assistance under such program will comply with all requirements imposed or pursuant to the acts, the regulations, and this assurance.

g. It agrees that the United States has a right to seek judicial enforcement with regard to any matter arising under the acts, the regulations, and this assurance.

31. **Disposal of Land.**

a. For land purchased under a grant for airport noise compatibility purposes, including land serving as a noise buffer, it will dispose of the land, when the land is no longer needed for such purposes, at fair market value, at the earliest practicable time. That portion of the proceeds of such disposition which is proportionate to the United States' share of acquisition of such land will be, at the discretion of the Secretary, (1) reinvested in another project at the airport, or (2) transferred to another eligible airport as prescribed by the Secretary. The Secretary shall give preference to the following, in descending order, (1) reinvestment in an approved noise compatibility project, (2) reinvestment in an approved project that is eligible for grant funding under Section 47117(e) of title 49 United States Code, (3) reinvestment in an approved airport development project that is eligible for grant funding under Sections 47114, 47115, or 47117 of title 49 United States Code, (4) transferred to an eligible sponsor of another public airport to be reinvested in an approved noise compatibility project at that airport, and (5) paid to the Secretary for deposit in the Airport and Airway Trust Fund. If land acquired under a grant for noise compatibility purposes is leased at fair market value and consistent with noise buffering purposes, the lease will not be considered a disposal of the land. Revenues derived from such a lease may be used for an approved airport development project that would otherwise be eligible for grant funding or any permitted use of airport revenue.

b. For land purchased under a grant for airport development purposes (other than noise compatibility), it will, when the land is no longer needed for airport purposes, dispose of such land at fair market value or make available to the Secretary an amount equal to the United States' proportionate share of the fair market value of the land. That portion of the proceeds of such disposition which is proportionate to the United States' share of the cost of acquisition of such land will, (1) upon application to the Secretary, be reinvested or transferred to another

eligible airport as prescribed by the Secretary. The Secretary shall give preference to the following, in descending order: (1) reinvestment in an approved noise compatibility project, (2) reinvestment in an approved project that is eligible for grant funding under Section 47117(e) of title 49 United States Code, (3) reinvestment in an approved airport development project that is eligible for grant funding under Sections 47114, 47115, or 47117 of title 49 United States Code, (4) transferred to an eligible sponsor of another public airport to be reinvested in an approved noise compatibility project at that airport, and (5) paid to the Secretary for deposit in the Airport and Airway Trust Fund.

c. Land shall be considered to be needed for airport purposes under this assurance if (1) it may be needed for aeronautical purposes (including runway protection zones) or serve as noise buffer land, and (2) the revenue from interim uses of such land contributes to the financial self-sufficiency of the airport. Further, land purchased with a grant received by an airport operator or owner before December 31, 1987, will be considered to be needed for airport purposes if the Secretary or Federal agency making such grant before December 31, 1987, was notified by the operator or owner of the uses of such land, did not object to such use, and the land continues to be used for that purpose, such use having commenced no later than December 15, 1989.

d. Disposition of such land under (a) (b) or (c) will be subject to the retention or reservation of any interest or right therein necessary to ensure that such land will only be used for purposes which are compatible with noise levels associated with operation of the airport.

32. **Engineering and Design Services.**

It will award each contract, or sub-contract for program management, construction management, planning studies, feasibility studies, architectural services, preliminary engineering, design, engineering, surveying, mapping or related services with respect to the project in the same manner as a contract for architectural and engineering services is negotiated under Title IX of the Federal Property and Administrative Services Act of 1949 or an equivalent qualifications-based requirement prescribed for or by the sponsor of the airport.

33. **Foreign Market Restrictions.**

It will not allow funds provided under this grant to be used to fund any project which uses any product or service of a foreign country during the period in which such foreign country is listed by the United States Trade Representative as denying fair and equitable market opportunities for products and suppliers of the United States in procurement and construction.

34. **Policies, Standards, and Specifications.**

It will carry out the project in accordance with policies, standards, and specifications approved by the Secretary including but not limited to the advisory circulars listed in the Current FAA Advisory Circulars for AIP projects, dated 3 APR 2014 (the latest approved version as of this grant offer) and included in this grant, and in accordance

with applicable state policies, standards, and specifications approved by the Secretary.

35. **Relocation and Real Property Acquisition.**

    a. It will be guided in acquiring real property, to the greatest extent practicable under State law, by the land acquisition policies in Subpart B of 49 CFR Part 24 and will pay or reimburse property owners for necessary expenses as specified in Subpart B.
    b. It will provide a relocation assistance program offering the services described in Subpart C and fair and reasonable relocation payments and assistance to displaced persons as required in Subpart D and E of 49 CFR Part 24.
    c. It will make available within a reasonable period of time prior to displacement, comparable replacement dwellings to displaced persons in accordance with Subpart E of 49 CFR Part 24.

36. **Access By Intercity Buses.**

    The airport owner or operator will permit, to the maximum extent practicable, intercity buses or other modes of transportation to have access to the airport; however, it has no obligation to fund special facilities for intercity buses or for other modes of transportation.

37. **Disadvantaged Business Enterprises.**

    The sponsor shall not discriminate on the basis of race, color, national origin or sex in the award and performance of any DOT-assisted contract covered by 49 CFR Part 26, or in the award and performance of any concession activity contract covered by 49 CFR Part 23. In addition, the sponsor shall not discriminate on the basis of race, color, national origin or sex in the administration of its DBE and ACDBE programs or the requirements of 49 CFR Parts 23 and 26. The sponsor shall take all necessary and reasonable steps under 49 CFR Parts 23 and 26 to ensure nondiscrimination in the award and administration of DOT-assisted contracts, and/or concession contracts. The sponsor's DBE and ACDBE programs, as required by 49 CFR Parts 26 and 23, and as approved by DOT, are incorporated by reference in this agreement. Implementation of these programs is a legal obligation and failure to carry out its terms shall be treated as a violation of this agreement. Upon notification to the sponsor of its failure to carry out its approved program, the Department may impose sanctions as provided for under Parts 26 and 23 and may, in appropriate cases, refer the matter for enforcement under 18 U.S.C. 1001 and/or the Program Fraud Civil Remedies Act of 1936 (31 U.S.C. 3801).

38. **Hangar Construction.**

    If the airport owner or operator and a person who owns an aircraft agree that a hangar is to be constructed at the airport for the aircraft at the aircraft owner's expense, the airport owner or operator will grant to the aircraft owner for the hangar a long term lease that is subject to such terms and conditions on the hangar as the airport owner or operator may impose.

39. **Competitive Access.**

a. If the airport owner or operator of a medium or large hub airport (as defined in section 47102 of title 49, U.S.C.) has been unable to accommodate one or more requests by an air carrier for access to gates or other facilities at that airport in order to allow the air carrier to provide service to the airport or to expand service at the airport, the airport owner or operator shall transmit a report to the Secretary that-

1) Describes the requests;

2) Provides an explanation as to why the requests could not be accommodated; and

3) Provides a time frame within which, if any, the airport will be able to accommodate the requests.

b. Such report shall be due on either February 1 or August 1 of each year if the airport has been unable to accommodate the request(s) in the six month period prior to the applicable due date.

OMB Number: 4040-0004
Expiration Date: 03/31/2012

Application for Federal Assistance SF-424

* 1. Type of Submission:	* 2. Type of Application:	* If Revision, select appropriate letter(s):
☐ Preapplication	☒ New	
☒ Application	☐ Continuation	* Other (Specify)
☐ Changed/Corrected Application	☐ Revision	

* 3. Date Received:	4. Applicant Identifier:

5a. Federal Entity Identifier:	* 5b. Federal Award Identifier:
AR/OK ADO, ASW-630	3-05-0020-42-2014

State Use Only:

6. Date Received by State:	7. State Application Identifier:

8. APPLICANT INFORMATION:

* a. Legal Name: City of Fayetteville

* b. Employer/Taxpayer Identification Number (EIN/TIN):	* c. Organizational DUNS:
716018462	134398903

d. Address:

* Street1:	4500 S School Ave , Ste F
Street2:	
* City:	Fayetteville
County:	Washington
* State:	Arkansas
Province:	
* Country:	USA: UNITED STATES
* Zip / Postal Code:	72701

e. Organizational Unit:

Department Name:	Division Name:
Transportation	Aviation

f. Name and contact information of person to be contacted on matters involving this application:

Prefix:	Mr.	* First Name:	James
Middle Name:			
* Last Name:	Nicholson		
Suffix:			

Title: Airport Financial Coordinator

Organizational Affiliation:
City of Fayetteville Aviation Division, Drake Field, KFYV

* Telephone Number:	479-718-7642	Fax Number:	479-718-7646

* Email: jnicholson@fayettevile-ar.gov

Application for Federal Assistance SF-424

9. Type of Applicant 1: Select Applicant Type:

(C) City Government

Type of Applicant 2: Select Applicant Type:

Type of Applicant 3: Select Applicant Type:

* Other (specify):

*** 10. Name of Federal Agency:**

Federal Aviation Administration

11. Catalog of Federal Domestic Assistance Number:

20.106

CFDA Title:

Airport Improvement Program (AIP)

*** 12. Funding Opportunity Number:**

* Title:

13. Competition Identification Number:

Title:

14. Areas Affected by Project (Cities, Counties, States, etc.):

City of Fayetteville, Washington County, Arkansas

*** 15. Descriptive Title of Applicant's Project:**

Terminal Apron Rehabilitation

Attach supporting documents as specified in agency instructions.

Application for Federal Assistance SF-424

16. Congressional Districts Of:

* a. Applicant: AR District 3
* b. Program/Project: AR District 3

Attach an additional list of Program/Project Congressional Districts if needed.

17. Proposed Project:

* a. Start Date: May 2014
* b. End Date: Dec 2014

18. Estimated Funding ($):

* a. Federal	32,445
* b. Applicant	
* c. State	3,605
* d. Local	
* e. Other	
* f. Program Income	
* g. TOTAL	36,050

*** 19. Is Application Subject to Review By State Under Executive Order 12372 Process?**

- [x] a. This application was made available to the State under the Executive Order 12372 Process for review on _____.
- [ ] b. Program is subject to E.O. 12372 but has not been selected by the State for review.
- [ ] c. Program is not covered by E.O. 12372.

*** 20. Is the Applicant Delinquent On Any Federal Debt? (If "Yes", provide explanation.) Applicant Federal Debt Delinquency Explanation**

- [ ] Yes
- [x] No

21. *By signing this application, I certify (1) to the statements contained in the list of certifications and (2) that the statements herein are true, complete and accurate to the best of my knowledge. I also provide the required assurances** and agree to comply with any resulting terms if I accept an award. I am aware that any false, fictitious, or fraudulent statements or claims may subject me to criminal, civil, or administrative penalties. (U.S. Code, Title 218, Section 1001)**

- [x] ** I AGREE

** The list of certifications and assurances, or an internet site where you may obtain this list, is contained in the announcement or agency specific instructions.

Authorized Representative:

Prefix: The Honorable
* First Name: Lioneld
Middle Name:
* Last Name: Jordan
Suffix:

* Title: Mayor, City of Fayetteville
* Telephone Number: 479-575-8330
Fax Number: 479-575-8257
* Email: ljordan@fayetteville-ar.gov
* Signature of Authorized Representative: Lioneld Jordan
* Date Signed: 5/21/14

Application for Federal Assistance SF-424

*** Applicant Federal Debt Delinquency Explanation**

The following field should contain an explanation if the Applicant organization is delinquent on any Federal Debt. Maximum number of characters that can be entered is 4,000. Try and avoid extra spaces and carriage returns to maximize the availability of space.

N/A

U.S. DEPARTMENT OF TRANSPORTATION - FEDERAL AVIATION ADMINISTRATION

OMB NO. 2120-0569
11/30/2007

PART II

PROJECT APPROVAL INFORMATION
SECTION A

Item 1. Does this assistance request require State, local, regional, or other priority rating? ☐ Yes ☒ No	Name of Governing Body: Priority:
Item 2. Does this assistance request require State, or local advisory, educational or health clearances? ☐ Yes ☒ No	Name of Agency or Board: (Attach Documentation)
Item 3. Does this assistance request require clearinghouse review in accordance with OMB Circular A-95? ☒ Yes ☐ No	(Attach Comments)
Item 4. Does this assistance request require State, local, regional or other planning approval? ☐ Yes ☒ No	Name of Approving Agency: Date: / /
Item 5. Is the proposal project covered by an approved comprehensive plan? ☐ Yes ☒ No	Check one: State ☐ Local ☐ Regional ☐ Location of Plan:
Item 6. Will the assistance requested serve a Federal installation? ☐ Yes ☒ No	Name of Federal Installation: Federal Population benefiting from Project:
Item 7. Will the assistance requested be on Federal land or installation? ☐ Yes ☒ No	Name of Federal Installation: Location of Federal Land: Percent of Project:
Item 8. Will the assistance requested have an impact or effect on the environment? ☐ Yes ☒ No	See instruction for additional information to be provided
Item 9. Will the assistance requested cause the displacement of individuals, families, businesses, or farms? ☐ Yes ☒ No	Number of: Individuals: Families: Businesses: Farms:
Item 10. Is there other related Federal assistance on this project previous, pending, or anticipated? ☒ Yes ☐ No	See instructions for additional information to be provided. *Phase I design & engineering project. Additional DOT/FAA assistance anticipated for Phase II Construction.*

PART II - SECTION C

The Sponsor hereby represents and certifies as follows:

1. Compatible Land Use. - The Sponsor has taken the following actions to assure compatible usage of land adjacent to or in the vicinity of the airport:

The Sponsor has adopted Drake Field Ordinance 2607, which regulates and restricts all land use activities in the vicinity of Fayetteville Executive Airport, Drake Field. Adopted January 20, 1980 and as amended.

2. Defaults. - The Sponsor is not in default on any obligation to the United States or any agency of the United States Government relative to the development, operation, or maintenance of any airport, except as stated herewith:

None

3. Possible Disabilities. - There are no facts or circumstances (including the existence of effective or proposed leases, use agreements or other legal instruments affecting use of the Airport or the existence of pending litigation or other legal proceedings) which in reasonable probability might make it impossible for the Sponsor to carry out and complete the Project or carry out the provisions of Part V of this Application, either by limiting its legal or financial ability or otherwise, except as follows:

None

4. Consistency with Local Plans. – The project is reasonably consistent with plans existing at the time of submission of this application) of public agencies that are authorized by the State in which the project is located to plan for the development of the area surrounding the airport.

Yes

5. Consideration of Local Interest - It has given fair consideration to the interest of communities in or near where the project may be located.

Not applicable

6. Consultation with Users. In making a decision to undertake any airport development project under Title 49, United States Code, it has undertaken reasonable consultations with affected parties using the airport which project is proposed.

Not applicable

7. Public Hearings. – In projects involving the location of an airport, an airport runway or a major runway extension, it has afforded the opportunity for public hearings for the purpose of considering the economic, social, and environmental effects of the airport or runway location and its consistency with goals and objectives of such planning as has been carried out by the community and it shall, when requested by the Secretary, submit a copy of the transcript of such hearings to the Secretary. Further, for such projects, it has on its management board either voting representation from the communities where the project is located or has advised the communities that they have the right to petition the Secretary concerning a proposed project.

Not applicable

8. Air and Water Quality Standards. – In projects involving airport location, a major runway extension, or runway location it will provide for the Governor of the state in which the project is located to certify in writing to the Secretary that the project will be located, designed, constructed, and operated so as to comply with applicable and air and water quality standards. In any case where such standards have not been approved and where applicable air and water quality standards have been promulgated by the Administrator of the Environmental Protection Agency, certification shall be obtained from such Administrator. Notice of certification or refusal to certify shall be provided within sixty days after the project application has been received by the Secretary.

Not applicable

PART II - SECTION C (Continued)

9. Exclusive Rights – There is no grant of an exclusive right for the conduct of any aeronautical activity at any airport owned or controlled by the Sponsor except as follows:

None

10. Land. – (a) The sponsor holds the following property interest in the following areas of land* which are to be developed or used as part of or in connection with the Airport subject to the following exceptions, encumbrances, and adverse interests, all of which areas are identified on the aforementioned property map designated as Exhibit "A":

Not applicable

The Sponsor further certifies that the above is based on a title examination by a qualified attorney or title company and that such attorney or title company has determined that the Sponsor holds the above property interests.

(b) The Sponsor will acquire within a reasonable time, but in any event prior to the start of any construction work under the Project, the following property interest in the following areas of land* on which such construction work is to be performed, all of which areas are identified on the aforementioned property map designated as Exhibit "A":

Not applicable

(c) The Sponsor will acquire within a reasonable time, and if feasible prior to the completion of all construction work under the Project, the following property interest in the following areas of land* which are to be developed or used as part of or in connection with the Airport as it will be upon completion of the Project, all of which areas are identified on the aforementioned property map designated as Exhibit "A"

**State character of property interest in each area and list and identify for each all exceptions, encumbrances, and adverse interests of every kind and nature, including liens, easements, leases, etc. The separate areas of land need only be identified here by the area numbers shown on the property map.*

U.S. DEPARTMENT OF TRANSPORTATION - FEDERAL AVIATION ADMINISTRATION

OMB NO. 2120-0569

PART III - BUDGET INFORMATION - CONSTRUCTION

SECTION A - GENERAL

1. Federal Domestic Assistance Catalog No. 20-106

2. Functional or Other Breakout ..... Airport Improvement Program

SECTION B -CALCULATION OF FEDERAL GRANT

Cost Classification	Use only for revisions		Total Amount Required
	Latest Approved Amount	Adjustment + or (-)	
1. Administration expense	$	$	$
2. Preliminary expense			
3. Land, structures, right-of-way			
4. Architectural engineering basic fees			$ 33,550
5. Other Architectural engineering fees			$ 2,500
6. Project inspection fees			$
7. Land development			
8. Relocation Expenses			
9. Relocation payments to Individuals and Businesses			
10. Demolition and removal - Obstruction removal			
11. Construction and project improvement			$
12. Equipment			
13. Miscellaneous			
14. Total (Lines 1 through 13)			$ 36,050
15. Estimated Income (if applicable)			
16. Net Project Amount (Line 14 minus 15)			$ 36,050
17. Less: Ineligible Exclusions			
18. Add: Contingencies (5%)			
19. Total Project Amt. (Excluding Rehabilitation Grants)			$ 36,050
20. Federal Share requested of Line 19			$ 32,445
21. Add Rehabilitation Grants Requested (100 Percent)			
22. Total Federal grant requested (lines 20 & 21)			$ 32,445
23. Grantee share			$ 3,605
24. Other shares			
25. Total Project (Lines 22, 23 & 24)	$	$	$ 36,050

U.S. DEPARTMENT OF TRANSPORTATION - FEDERAL AVIATION ADMINISTRATION

OMB NO. 2120-0569

SECTION C - EXCLUSIONS

Classification	Ineligible for Participation (1)	Excluded From Contingency Provision (2)
a.	$	$
b.		
c.		
d.		
e.		
f.		
g. Totals	$	$

SECTION D - PROPOSED METHOD OF FINANCING NON-FEDERAL SHARE

27. Grantee Share	$ 3,605
a. Securities	
b. Mortgages	
c. Appropriations (By Applicant)	
d. Bonds	
e. Tax Levies	
f. Non Cash	
g. Other (Explain)	
h. TOTAL - Grantee share	3,605
28. Other Shares	
a. State	
b. Other	
c. Total Other Shares	
29. TOTAL	$ 3,605

SECTION E - REMARKS

PART IV PROGRAM NARRATIVE (Attach - See Instructions)

PART IV
PROGRAM NARRATIVE
(Suggested Format)

DEPARTMENT OF TRANSPORTATION - FEDERAL AVIATION ADMINISTRATION

OMB NO. 2120-0569

PROJECT : Terminal Apron Rehabilitation Phase I

AIRPORT : Drake Field, FYV

1. Objective:

Design and engineering tasks leading to construction plans suitable for bidding. Receipt of Bids.

2. Benefits Anticipated:

A well-designed cost-effective solution to arrest the ongoing deterioration of the main terminal aircraft parking area. Originally constructed in the 1970s, the concrete surface is increasingly prone to pop-outs and spalling producing an ongoing FOD hazard for aircraft. The project will provide the best, least-cost approach to restoring the Terminal Aircraft Parking Apron surface, reducing hazards and extending its useful life.

3. Approach : *(See approved Scope of Work in Final Application)*

d. Consulting Airport Engineer to produce plans & specifications for bidding.

4. Geographic Location:

Terminal Parking Apron. See attached vicinity map, Exhibit "A"

5. If Applicable, Provide Additional Information:

6. Sponsor's Representative: *(include address & telephone number)*

James Nicholson, Airport Financial Coordinator

4500 S School Ave, Ste F

Fayetteville, AR, 72701

Phone: 479-718-7642, Fax: 479718-7646, e-mail: jnicholson@fayetteville-ar.gov

New Contract
2309

RESOLUTION NO. 33-14

A RESOLUTION TO APPROVE TASK ORDER NO. 10 WITH MCCLELLAND CONSULTING ENGINEERS, INC. IN THE AMOUNT OF $36,050.00 FOR PROJECT DESIGN AND BIDDING SERVICES ASSOCIATED WITH THE TERMINAL APRON REHABILITATION PROJECT AND TO APPROVE A BUDGET ADJUSTMENT OF $36,050.00

WHEREAS, the cost of the project design and bidding services associated with the Terminal Apron Rehabilitation Project, in the amount of $36,050.00, is anticipated to be fully reimbursed through grants from the Federal Aviation Administration and the Arkansas Department of Aeronautics;

NOW, THEREFORE, BE IT RESOLVED BY THE CITY COUNCIL OF THE CITY OF FAYETTEVILLE, ARKANSAS:

Section 1: That the City Council of the City of Fayetteville, Arkansas hereby approves Task Order No. 10 with McClelland Consulting Engineers, Inc. in the amount of $36,050.00 for project design and bidding services associated with the Terminal Apron Rehabilitation Project and authorizes Mayor Jordan to sign Task Order No. 10.

Section 2: That the City Council of the City of Fayetteville, Arkansas hereby approves a budget adjustment in the amount of $36,050.00, a copy of which is attached as Exhibit "A."

PASSED and **APPROVED** this 18th day of February 2014.

APPROVED: ATTEST:

By: _____ By: _____
LIONELD JORDAN, Mayor **SONDRA E. SMITH**, City Clerk/Treasurer

CITY CLERK / TREASURER CITY OF FAYETTEVILLE ARKANSAS WASHINGTON COUNTY

EXHIBIT A

178.05 Food Truck and Food Trailer Limited Time Permits

(A) *Purpose.* This section's purpose is to create a process that allows food trucks and food trailers to locate for a limited time on public and private property. Food trucks are defined as a motorized and operationally self-contained single vehicle equipped with facilities for cooking and selling food. Food trailers are defined as a mobile food unit designed to be towed on public roads and having an enclosed area for storage, handling or preparation of food.

(B) *Limited Time Permit for Parallel Parking Spaces.* Food trucks may apply for a permit determined through a lottery drawing by the Planning Division to locate for a limited time in a marked or delineated parallel public parking space.

(1) The Planning Division will conduct a lottery in November each year for a total of three (3) Limited Time Permits for locating in parallel parking spaces on public roads. If more than nine (9) lottery applications are made Planning Staff may increase the number of permits issued not to exceed one third (1/3) of the total number of applications. Instances in which 1/3 the total number of applications results in a fraction of 0.5 or higher, the number of permits available shall be rounded up to the next whole number. These permits shall be issued on January 1st and will extend until December 31st. Food trucks may apply and participate in this lottery every year.

(2) A Limited Time Permit for Parallel Parking Spaces may be approved administratively by the Planning Division after making the following determinations:

(a) The applicant has paid an annual $100 permit fee. Food trucks shall pay the appropriate fee for the time they are located in public parking spaces. The food truck shall fit entirely within one marked parallel on-street parking space.

(b) The applicant has provided a valid copy of the County Health Department permit and proof of remittance of HMR tax to the City of Fayetteville.

(c) The applicant has the responsibility to dispose of all wastes in accordance with all applicable laws. Food trucks are not permitted to dispose of their trash in public trash receptacles.

(d) The applicant agrees to move to a different location after a four (4) hour time period. This time period includes onsite set-up and break-down time. The applicant agrees to move at least 325 feet away or out of sight/view of their previous location once their initial 4 hour time period has expired.

(e) The applicant agrees to not locate on the same side of the street directly in front of an existing restaurant.

(f) The applicant agrees to only vend towards the sidewalk side of the street and to keep the sidewalk unobstructed to allow for free flow pedestrian movement along the street.

(g) The applicant agrees to locate on public property such that they will not cause an unsafe traffic or pedestrian situation.

(h) The applicant agrees not to set up in a parking space adjacent to a parking pay station kiosk.

(i) Food trucks are prohibited from parking or vending from angled on-street parking spaces and from public parking lots in the Entertainment District or the Downtown Business District. Food trucks are prohibited from parking in marked parallel parking spaces that are posted reserved for residential use.

(j) The City reserves the right to limit food trucks from utilizing public parking spaces during special events such as; parades, Bikes, Blues and BBQ, etc. Special event permits may be available to food trucks for certain events. Contact the City's Parking Division for special event permits.

(C) *Limited Time Permit on Public Property.* Food trucks and food trailers may apply for a permit determined through a lottery drawing by the Planning Division to locate for a limited time on public property excluding on-street marked parallel or angled parking spaces. Food trucks and food trailers with this permit may also vend in City Parks with approval by the Parks and Recreation Director.

(1) The Planning Division will conduct a lottery in November each year for a total of three (3)

Limited Time Permits for locating on public property. If more than nine (9) lottery applications are made Planning Staff may increase the number of permits issued not to exceed one third (1/3) of the total number of applications. Instances in which 1/3 the total number of applications results in a fraction of 0.5 or higher, the number of permits available shall be rounded up to the next whole number. These permits shall be issued on January 1st and will extend until December 31st. Food trucks and food trailers may apply and participate in this lottery every year.

(2) A Limited Time Permit on Public Property may be approved administratively by the Planning Division after making the following determinations:

(a) The applicant has paid an annual $100 permit fee. Food trucks and food trailers shall fit entirely within no more than two parking spaces on public property or in a City Park and shall pay the appropriate fee for the time they are located in public parking spaces.

(b) The applicant has provided a valid copy of the County Health Department permit and proof of remittance of HMR tax to the City of Fayetteville.

(c) The applicant has the responsibility to dispose of all wastes in accordance with all applicable laws. Food trucks and food trailers are not permitted to dispose of their trash in public trash receptacles.

(d) The applicant agrees to move to a different location after a four (4) hour time period. This time period includes onsite set-up and break-down time. The applicant agrees to move at least 325 feet away or out of sight/view of their previous location once their initial 4 hour time period has expired.

(e) The applicant agrees to locate on public property such that they will not cause an unsafe traffic or pedestrian situation.

(f) The applicant agrees not to set up in a parking space adjacent to a parking pay station kiosk.

(g) Food trucks and food trailers are prohibited from parking or vending from on-street marked parallel or angled parking spaces and from gated public parking lots in the Entertainment District or the Downtown Business District. Food trucks and food trailers are also prohibited from parking in marked parking spaces that are posted reserved for residential use.

(h) The City reserves the right to limit food trucks and food trailers from utilizing public parking spaces during special events such as; parades, Bikes, Blues and BBQ, etc. Special event permits may be available to food trailers for certain events. Contact the City's Parking Division for special event permits.

(D) *Limited Time Permit on Private Property.* Food trucks and food trailers may be approved administratively by the Planning Division for a Limited Time Permit to locate on private property after meeting the following conditions:

(1) The applicant has paid an annual $100 permit fee, unless they are also the holder of a public property lottery permit and they have already paid a $100 permit fee. Permits expire December 31st.

(2) The applicant has provided a valid copy of the County Health Department permit and proof of remittance of HMR tax to the City of Fayetteville.

(3) The applicant has the responsibility to dispose of all wastes in accordance with all applicable laws. Food trucks and food trailers are not permitted to dispose of their trash in public trash receptacles.

(4) The applicant has agreed to move to a different property after a four (4) hour time period. This time period includes any onsite set-up or break-down time.

(5) The property is zoned to allow for food and beverage uses and the location meets all applicable zoning requirements of the underlying zoning district. The property owner for each location must provide a written statement giving the food truck or food trailer operator permission to operate on the property. A site plan shall be provided by the applicant or property owner for each proposed site upon which the food truck or food trailler would like to temporarily locate. The vendor shall keep these records up to date with the Planning Division.

(6) The applicant agrees to locate on private property such that they will not cause an unsafe traffic or pedestrian situation.

Alderman Adella Gray
Ward 1 Position 1

Alderman Sarah Marsh
Ward 1 Position 2

Alderman Mark Kinion
Ward 2 Position 1

Alderman Matthew Petty
Ward 2 Position 2

Alderman Justin Tennant
Ward 3 Position 1

Alderman Martin W. Schoppmeyer, Jr.
Ward 3 Position 2

Alderman Rhonda Adams
Ward 4 Position 1

Alderman Alan T. Long
Ward 4 Position 2

Mayor Lioneld Jordan
City Attorney Kit Williams
City Clerk Treasurer Sondra E. Smith

City of Fayetteville Arkansas
City Council Meeting
July 01, 2014

A meeting of the Fayetteville City Council was held on July 01, 2014 at 5:30 PM in Room 219 of the City Administration Building located at 113 West Mountain Street, Fayetteville, Arkansas.

Mayor Jordan called the meeting to order.

PRESENT: Alderman Adella Gray, Sarah Marsh, Mark Kinion, Matthew Petty, Justin Tennant, Martin Schoppmeyer, Rhonda Adams, Alan Long, Mayor Lioneld Jordan, City Attorney Kit Williams, City Clerk Sondra Smith, Staff, Press, and Audience.

Alderman Adams and Alderman Gray arrived at 5:35 p.m.

Pledge of Allegiance

<u>Mayor's Announcements, Proclamations and Recognitions:</u>

Mayor Jordan recognized the Young African Leaders Initiative group from the University of Arkansas.

City Council Meeting Presentations, Reports and Discussion Items: None

Agenda Additions: None

UNOFFICIAL

Consent:

Approval of the June 17, 2014 City Council meeting minutes.

Approved

City Council Workers Compensation Insurance Support: A resolution to express the City Council's support of a legislative enactment to provide for workers compensation insurance coverage for emergency responders for work-related mental injury or illness.

Resolution 116-14 as recorded in the office of the City Clerk.

Bid #14-29 Forsgren, Inc.: A resolution to award Bid #14-29 and authorize a contract with Forsgren, Inc. in the amount of $1,242,968.30 for improvements to the Greenland Gravity Sewer Main, to approve a cost share agreement with the City of Greenland in the amount of $374,806.67, to approve a project contingency of $125,000.00, and to approve a budget adjustment.

Resolution 117-14 as recorded in the office of the City Clerk.

Alderman Marsh moved to approve the Consent Agenda as read. Alderman Tennant seconded the motion. Upon roll call the motion passed 6-0. Alderman Adams and Alderman Gray were absent during the vote.

Unfinished Business:

Amended Articles of Incorporation for the Walton Arts Center Council and Foundation: An ordinance to approve the Fifth Amendment to the Articles of Incorporation of the Walton Arts Center Foundation, Inc., the Sixth Amendment of the Articles of Incorporation of the Walton Arts Center Council, Inc. and their amended Bylaws, and the Amended and Restated Interlocal Cooperation Agreement between the University of Arkansas and the City of Fayetteville.

Alderman Long moved to suspend the rules and go to the second reading. Alderman Marsh seconded the motion. Upon roll call the motion passed 7-0. Alderman Gray was absent during the vote.

City Attorney Kit Williams read the ordinance.

Mayor Jordan stated there were several people from the public who would like to address the Council. He stated he would begin the conversation with public comment.

Greg Lee, Chairman of the Walton Arts Center Board: I want to thank you all for your service to our community and your legacy of supporting the arts cultural activities and specifically the Walton Arts Center. I appreciate the opportunity to speak to you on behalf of the overwhelming majority of the Board of the Walton Arts Center and its staff and to speak in favor of the governance proposal as presented to you for your consideration.

UNOFFICIAL

The Board of the Walton Arts Center ratified this same governance proposal by an overwhelming majority. It is and has always been the intent of our Board and our staff to grow the quality, variety and quantity of programming presented at the Walton Arts Center in Fayetteville. Since 1992 we have seen the Walton Arts Center grow to be a top notch performing arts center with a scale and scope not normally seen in a city or region of our size. The Walton Arts Center Board is grateful to the City of Fayetteville and the citizens of Fayetteville who have established a legacy of financial investment in and support for the Walton Arts Center. The Walton Arts Center is also very fortunate to have the legacy of substantial ongoing financial investment and support from donors and patrons outside of Fayetteville. It is this combination of support from Fayetteville and Northwest Arkansas that has made the original construction and the ongoing success of the Walton Arts Center possible.

The Walton Arts Center has a significant need for ongoing fundraising. Ticket sales only provide an average of 50% of our annual revenue with the balance of our required funds coming from fundraising. Approximately 4% of our annual revenue comes from the City of Fayetteville, the State of Arkansas and the U.S. Government. Each of them making contributions to specific programming, which is very important to us. The remaining 46% of our annual fundraising/revenue comes from private citizens, our foundation and corporate entities. Our annual revenue budget for this particular year of 2014 was 9.5 million dollars. We have a substantial requirement each year to raise four plus million dollars from private donors to just operate on an annual basis. I say this to illustrate the Walton Arts Center Board fully understands and appreciates its significant reliance upon the continued support of the City of Fayetteville, Fayetteville citizens, University of Arkansas, the Walton Family Foundation, our Northwest Arkansas donor base to supplement our ticket revenue and provide funding for our programming, our facility maintenance and our capital improvement program.

Fayetteville has been our home for 22 years. The Fayetteville performing arts center has been and will be for as far as this Board can see, the centerpiece and engine of the Walton Arts Center. It is both our pledge and our stated intention to expand and upgrade the jewel that is the Walton Arts Center of Fayetteville. The Walton Arts Center Board passed a resolution reaffirming our commitment to fulfill the plans as outlined by the November 2013 bond issue that was supported by the citizens of Fayetteville. To do so requires our Board and staff to conduct a successful capital campaign to raise approximately 16.5 million dollars from our private donor base. Our Board believes our opportunity for a successful campaign is enhanced by your vote in favor of the governance as presented. We believe the governance proposal makes provision or the protection and assurances that Fayetteville and the U of A should both deserve and should require. Our Board members and our major donors want clarity and certainty as to the scope of the authority that resides with the Walton Arts Center Board. We want to make decisions knowing that we have the authority to do so. Our Board believes the concerns of both our Board members and major donors with that regard are appropriately addressed in the governance proposal.

My personal pledge to you as a Board member and current Chairman is to make all best efforts to ensure that this expansion program is carried through as pledged to the City of Fayetteville through its completion. If you approve the governance, I assure you I will do my very best to affect an appropriate transition. I ask for your vote of yes on the governance proposal as presented.

UNOFFICIAL

David Gearhart, Chancellor of the University of Arkansas: We have enjoyed working with the City Council, the City of Fayetteville and the Walton Arts Center. We have had this incredible partnership for 25 years. The partnership has existed with very little strife. It has been one of the greatest things that has ever happened for the City of Fayetteville and certainly has benefitted the University of Arkansas. I want to compliment this group and your predecessors for making the Walton Arts Center a showplace for our community.

I believe strongly in Northwest Arkansas and that we all have to work together. My first and foremost allegiance and concern is for the City of Fayetteville, citizens of Fayetteville and the University of Arkansas. I believe these new governance documents will help to continue the great partnership between the City of Fayetteville and the University of Arkansas. I am very supportive of what happens all through Northwest Arkansas. The AMP, the potential building of another venue perhaps in Bentonville are good things, but my first concern has to be about this city and the University of Arkansas.

I believe firmly that enacting this new governance structure is going to benefit the City of Fayetteville and the University of Arkansas. We have to look out after ourselves. The City of Fayetteville and the University of Arkansas are the two entities that have to do everything we can to make certain the Walton Arts Center remains viable and continues to be an important entity in our city and on Dickson Street. To ensure that we are going to have a viable venue we need to enact these new governance documents.

The University of Arkansas Board of Trustees met last month and they approved unanimously the new documents. Their hope is that you also will approve unanimously these new documents. The partnership we have shared over the last 25 years is a very important one and I hope that we will continue to share that partnership in the future.

I pledge that the University of Arkansas is going to do everything we can to remain the venue where the arts happen. With the facilities we have at the University of Arkansas, we are committed to using our facilities for the benefit of the citizens of this community. The combination of our facilities, the combination of what we have here in Fayetteville and the partnership we have in the city, this community will remain the venue of choice for the arts. I ask you on behalf of our Board of Trustees, faculty and students to support this and pass it unanimously.

Mary Ann Greenwood, Chairman of Greenwood Gearhart stated she is a supporter of the Walton Arts Center and a member of the Walton Arts Center Foundation Board. She stated she would like each City Council member to support and approve the governance proposal as presented. She thanked the Aldermen for taking time to serve as a member of the City Council and stressed how important they are to Fayetteville and Northwest Arkansas.

She stated the leadership at the Walton Arts Center completed an extensive and exhaustive process to develop and secure approval for the new governance structure that will enable continued expansion and development of programming that will enhance the quality of life in Fayetteville and Northwest Arkansas. She requested the City Council to support the proposal as presented and move Fayetteville forward.

UNOFFICIAL

Woody Bassett, Citizen of Fayetteville: I have had the privilege of serving two terms on this City Council. I understand your responsibilities and what it is like to be an Alderman in Fayetteville. Thank you for your service. You have handled addressing this governance issue in the way I would expect you to handle it as a citizen of Fayetteville. It is an important issue. You all have asked good questions and listened to your constituents.

I commend Mayor Jordan and City Attorney Kit Williams for all the time and effort you put in working with other parties to bring this proposal to this Council. I commend all of you on the Council for the time and effort that you have put into this leading up to tonight. If you approve the governance proposal that is before you, it will be in the best interest of Fayetteville and the people who live here.

Bill Bradley, Chair of the Fayetteville Chamber of Commerce Board of Directors: A letter dated June 13, 2014 was sent to Mayor Jordan and the City Council formally endorsing the governance changes. Being part of a regional Northwest Arkansas arts revival and expansion serves Fayetteville well. Our view that the due diligence process in reviewing the changes in governance have been thorough, deliberant and done by a diverse capable group. Our view that ample provisions are included in the changes to protect the roles of Fayetteville and the University of Arkansans going forward, as well as ensuring an active arts experience on Dickson Street for the long term. To show appropriate gratitude to the Walton Family for all they have done for us historically and have committed to do in the future. We believe the time to move forward with these changes is now. Doing so ensures Fayetteville as a vital part of the Northwest Arkansas arts scene.

Joe Fennel, President of the Dickson Street Merchants Association: Your support of the Walton Arts Center governance proposal is very important to the vitality of Dickson Street and the City of Fayetteville. I ask that you support the changes to the governance proposal that is before you. The Dickson Street Merchants Association believes the Walton Arts Center Boards approval of the resolution stating that money will not be raised for new performance facilities within or outside of Fayetteville without having first funded and completed the construction of the Fayetteville expansion speaks highly of their commitment to the Fayetteville Walton Arts Center project.

Leyah Bergman Lanier, Citizen stated she would like to see the City Council stay faithful to the commitment to the City of Fayetteville. She stated that the Walton Arts Center is one of the very first things introduced to international students when coming to the University of Arkansas. She stated Fayetteville's commitment to the arts has been exceptional and hopes that it will continue.

Alderman Tennant: I want to thank the people who have spoken tonight and your words are extremely important. What I asked for when I proposed my amendment at the last meeting was more assurance that what the voters of Fayetteville voted yes for last November would be exactly what they received. The 3,640 people who voted yes deserve this assurance so that in the future Dickson Street renovation of the Walton Arts Center could not be changed. Placing restrictions on when the governance of the Walton Arts Center change would go into effect would guarantee this for the citizens. I am proud that we did this because it has made our community stronger and made the renovation project stronger.

UNOFFICIAL

I was pleased last week when I saw the Walton Arts Center Council pass their resolution. What I saw was citizens wanting what is in the best interest of the city and tonight we have seen them step up and give their word. Depending on one or two people who say trust me, is not sufficient to me or the people of Fayetteville. When I see names like Gearhart, Bassett, Lee and take calls from some of the most prominent citizens we have, it is clear to me that these people have truly given their word. When I hear Greg Lee state that he will make a personal assurance that matters a great deal to me. The newspaper said that Mr. Lee and people like him have put their integrity on the line. This is a really important step for our city.

I want to thank the Walton Arts Center Council for making this assurance. I thank them for giving us their personal assurances and giving their word that this project will happen as the voters were told it would. This is an assurance to the people, by the people.

At the June 17, 2014 City Council meeting an amendment to the Amended Articles of Incorporation for the Walton Arts Center Council and Foundation ordinance was not voted on and tabled to the July 1, 2014 City Council meeting.

Alderman Tennant moved to withdraw his motion to amend. Alderman Long withdrew his second. Motion to amend was withdrawn.

Alderman Gray: Justin has spoken very well and I agree completely. I appreciate each of you coming and for contacting us this week to express how important you feel this is. I have read every letter carefully and have talked to several of you. This has convinced me that we do have the assurances that we need for the people of Arkansas and Fayetteville. It will pay off in devotion and allegiance to the Walton Arts Center. Constituents who have expressed some concerns to me will be assured. We will now see the Walton Arts Center on Dickson Street flourish and grow.

Alderman Kinion: The Walton Arts Center is in Ward 2. Whenever I look at the Ward that I represent, I know the importance of the Walton Arts Center and the Entertainment District. We know the identity we have associated with the Walton Arts Center being in Fayetteville and on Dickson Street. What I have seen over the past two weeks is engaged community discussion that Fayetteville is famous for. We have certainly had more input from a broader community than we had two weeks ago. With the broad support, the public assurances with individuals that I believe have great integrity, the resolution that is public and published, I feel confident I can support this and move forward.

Alderman Kinion moved to suspend the rules and go to the third and final reading. Alderman Marsh seconded the motion. Upon roll call the motion passed 7-1. Alderman Long voted no.

City Attorney Kit Williams read the ordinance.

Alderman Marsh: I appreciated the resolutions that were passed by the Walton Arts Center Board and I feel really good about this governance change. The reality is that Northwest Arkansas is no longer just Fayetteville. It is counterproductive of us to potentially limit the growth of the Walton Arts Center based on irrational fears, especially when the Board has made it abundantly clear that

UNOFFICIAL

the Fayetteville campus will continue to be the home campus and the first priority of the Walton Arts Center.

I am glad to see the growth and development of other cultural destinations within driving distance of our city. I want the City Council to support this regional economic development. The proposed agreement is a good balance between protecting Fayetteville's interest while enabling the Walton Arts Center to diversify its offerings through our metro region. It maintains the box office and associated sales tax revenue in our city. It keeps their administrative jobs in our Downtown, guarantees high quality programing and supports the growth and improvement of our arts center which is a vital piece of our Entertainment District. The proposed agreement strikes a fair balance for all stakeholders involved.

Alderman Long: I wasn't prepared to vote on this tonight. I was hoping we would hold it for another two weeks. I know that you were involved in the negotiations.

Mayor Jordan stated to Alderman Long that he was involved in the negotiations.

Alderman Long: Since this is a move to make it a regional board and they are going to be building a facility in another community also, this agreement lacks one thing to me. They don't have representations from those communities in which they will be building other facilities. If this is truly a regional move, then why wouldn't other facilities share the same representation?

City Attorney Kit Williams: That was discussed. It was decided that the Walton Family Foundation being able to appoint nine members of this Walton Arts Center Council Board would be in the best position to protect any interest for the Benton County entities. We looked at who has actually been the financial and organizational supports of the Walton Arts Center. It has been the University of Arkansas, City of Fayetteville and the Walton Family Foundation. We felt that those were the three major players and therefore they are the players that should be the ones to appoint the Board of the Walton Arts Center Council.

I have not heard any problems from the City of Bentonville or the City of Rogers. They realize that the Board members appointed by the Walton Family Foundation will protect them. The most important thing for those cities was the fact that we agreed to change the purposes of the Articles of Incorporation which had focused only on the Dickson Street facility to expand into the Bentonville facility, the Rogers AMP and the University facilities. All the entities agreed this was the best solution.

Mayor Jordan: My involvement in this started around 2009 when I came into office. We met with business leaders on Dickson Street and met with the Walton Arts Center. At one of the meetings we discussed the concerns about the parking deck at the Downtown area and we went to work on that. We talked about an expansion of the Walton Arts Center and we went to work on that. It has been five years that we have been working on this. For the last year and a half, Kit, Don and I have been working on coming up with these governance changes. We worked with the Walton Arts Center. Thank you Greg Lee and Peter Lane for your help on this. We worked with the University of Arkansas. Thank you Chancellor Gearhart. Thank you to the Walton Family Foundation.

UNOFFICIAL

It is no longer Fayetteville, it is a region. What we have in our city and our region is a partnership base government. We are all in this together and moving it forward together to a new level. Thank you to all the attorneys that worked on this. You did a great job. We came to a solution that I thought we could all live with and advance this city and region. More importantly than anything that is written, everyone gave me their word and I gave them mine. I believe that is stronger than any contract you can ever draw up. If your word is no good, then you are no good. It is time to move this city and region to a new level.

Mayor Jordan asked shall the ordinance pass. Upon roll call the ordinance passed 7-1. Alderman Long voted no.

Ordinance 5693 as Recorded in the office of the City Clerk

Walton Arts Center Council, Inc. Lease: A resolution to approve an Amended and Restated Lease Agreement among the University of Arkansas and City of Fayetteville as landlords and the Walton Arts Center Council, Inc. as tenant. ***This resolution was tabled at the June 17, 2014 City Council meeting to the July 1, 2014 City Council meeting.***

City Attorney Kit Williams: This was discussed with the governance changes. I think the audience was addressing the lease as well as the governance changes when they were speaking. If there are any questions about the lease I would be happy to answer them.

Alderman Kinion: We have addressed this with the previous discussion.

Alderman Adams: Thank you to Justin for your leadership on this. One of the things this did for me was give me a couple of weeks to visit with Don Marr and get some perspective on the city's hard work on this. It gave me a chance to talk with Steve Clark and listen to his thoughts and opinions. I appreciate the people who took the time to explain something that might have been confusing to some of the citizens.

Alderman Tennant: Thank you Rhonda.

Mayor Jordan: I also want to thank Alderman Tennant. It doesn't hurt to question things and we should all be so diligent to make sure things don't get rubber stamped.

Alderman Tennant: Thank you Mayor.

Alderman Marsh: The Porter Produce building occupies the corner of Spring Street and West Street. It is within the Walton Arts Center campus and it is a 1904 to 1908 structure with deep ties to the agricultural history of our region. Right now it is being used as a boarded up storage facility for the Walton Arts Center. As we are looking at revitalizing our Downtown through the Main Street Program, one of the things we need to remember is that every building in our Downtown matters.

UNOFFICIAL

During the last meeting of the Economic Accountability Council we had passed a resolution asking for some protections for this building. To prevent it from being torn down or significantly altered without the consent of the City Council. A binding agreement from the Walton Arts Center to prevent further degradation to the building and a good faith commitment from the Walton Arts Center to work with the community to develop and execute a plan to activate the corner of West and Spring Street in such a way that contributes to the vitality of the street scape and results in a higher and better utilization of the Porter Produce building than its current status.

Thank you to the Walton Arts Center Council for their recent resolution they passed. I feel that it addresses all of these concerns. I appreciate the effort and I look forward to working together to find an appropriate use to activate this important corner of our Downtown.

Alderman Kinion moved to approve the resolution. Alderman Gray seconded the motion. Upon roll call the resolution passed unanimously.

Resolution 118-14 as recorded in the office of the City Clerk.

New Business:

RZN 14-4687 (659 N. Genevieve Ave./Davis): An ordinance rezoning that property described in rezoning petition RZN 14-4687, for approximately 1.62 acres, located at 659 N. Genevieve Avenue from R-A, Residential-Agricultural to RSF-2, Residential Single Family, 2 units per acre.

City Attorney Kit Williams read the ordinance.

Jeremy Pate, Director of Development Services gave a brief description of the ordinance. The Planning Commission approved the request with a vote of six to three. Staff does not support the designation. There is a very low amount of infrastructure and we feel that adding additional lots within this area would not be in the best interest of the City of Fayetteville.

Alderman Marsh: Where is this in relation to Rupple Road and the box around the city? Is it inside or outside of that box?

Jeremy Pate: It is quite a ways outside.

Alderman Petty: How many homes are out on this road now?

Jeremy Pate: Roughly 10 to 12.

Alderman Petty: Is it paved?

Jeremy Pate: It is paved and photographs have been provided.

Alderman Petty: It is a public road and we are responsible for maintenance of the infrastructure out there?

UNOFFICIAL

Jeremy Pate: That is correct. There are some private roads within the area that we do not maintain. A lot of times they are utilized as public because there are no gates on them.

Gary Davis, Applicant: I am proposing to build two single family residential housing units. They will be probably about 1,600 square feet each and craftsman style construction.

Alderman Kinion: Jeremy, please remind us about the infrastructure for water delivery. This is a concern when looking at expanding the overall utilization of this property at a higher density.

Jeremy Pate: One of the things that was identified was the existing water line with the additional single family units you don't see infrastructure improvements, so you don't see water line improvements generally if there is already access and the capacity for domestic services there. If there is only a two inch water line here that essentially means there is no fire protection for this particular area. It would be some sort of pump truck used or something of that nature. This is an area that was annexed like this and it has been this way since the 1970's or before. It has not had the development pressure to improve the infrastructure in this area.

Alderman Kinion: It is a two inch water line all the way from 54th Avenue down Tackett Drive.

Jeremy Pate: I believe that is correct.

Alderman Kinion: If you can imagine a two inch water line serving this whole residential area, we are already at a capacity where there is a concern. I hope when someone develops this, they would offer in some way to improve the infrastructure so we could have confidence there would be fire protection in this area. It is at the very edge of Fayetteville. We have not had water improvements and haven't considered any water improvements through the Water & Sewer Committee in this area.

I would love to support the vision of the landowner as a property right to develop it. In reality as a responsible advancement to the west, I feel like there is some concern that overrides that vison because of fire protection and overall water pressure on a two inch line going all the way from 54th Avenue to the end of Tackett Drive. I hope the City Council will consider this when we move forward if indeed we decide to up the density here, then it is possible we are going to have further density development along the adjacent streets. If the City Council sees this as a vision and we need to have more density in the western area of Fayetteville, then we need to consider how to improve the infrastructure. At this time the Water & Sewer Committee hasn't even discussed it.

Mayor Jordan: I think that is a great point.

Alderman Kinion: This is a concern until we have a budget that can support infrastructure and safety. We recently had an improved fire rating and it is because we have the capacity to get water where it is needed to protect our community. I think this not in line with what we are expecting here in the City of Fayetteville.

UNOFFICIAL

It is with regret that I can't support it because I do like property rights. I like the opportunity for an individual with a vison to build on their property, but this property does not have the infrastructure right now to support higher density.

Jeremy Pate: I would like to clarify. There is a subdivision east of this property and it would be a very lengthy extension**.** It is called Sundance Meadows and it was approved in the early 2000's. That likely has fire protection, but it is still quite a ways and I don't know if they would have access or the means to provide an extension for even two single family homes. Generally we require an eight inch water line.

Mayor Jordan: The Planning Commission passed it R-2, but what was the recommendation of the staff?

Jeremy Pate: We were recommending that it remain in the current designation of R-A which is consistent with property surrounding.

Gary Davis: There was a double wide mobile home at the rear of that property, which has been moved, so the water lines are there. There is no increase in the size of the water lines.

Jeremy Pate: It is likely accessed off that existing two inch water line that provides the service to these properties.

Alderman Long: I walked this entire area. The streets and the infrastructure seem too narrow to increase the density as well as the concerns about the water. I don't believe I can support this.

Alderman Adams: We have a Fire Department memo in our packets. It looks like the memo is only addressing response time. I don't know how much pressure we are putting on Fire Station seven located on Rupple Road. You all aren't looking at the size of the pipes, you are looking at response time mainly?

David Dayringer, Fire Chief: We look at response time and we also look at water supply. We go and check the hydrants all over the city. When we pre-plan an area we take those things in consideration. This is the western edge of town. We have automatic aid agreements with all of our surrounding partners on the very edges of town. The surrounding Fire Departments do have tankers and respond automatically with the resources we set up with them.

Alderman Adams: So the Wedington Fire Department would likely respond here, in addition to the city?

David Dayringer: Yes.

Alderman Adams: I have so much confidence in the review sheet in our packets that I never really question. If you say it is good with our Fire Department, then I depend on your professional opinion.

UNOFFICIAL

David Dayringer: We have plans for the edges of the city. Even the ones that are annexed after the fire stations are built, we plan them out.

Alderman Adams: The jurisdiction when it is inside the city limits, the city engine is going to go out there if there is a fire and Wedington Volunteer Fire Department is also going to respond too?

David Dayringer: Yes. They are dispatched along with our units in the automatic aid areas.

Alderman Petty: If we look at what it is going to cost to maintain the infrastructure out there, whether that be roads and sidewalks or it is the water infrastructure, we have to come up with a plan to pay for the maintenance, even if somebody else pays for the installation. Often times we think if somebody comes forward with a development proposal and they are going to pay for the necessary infrastructure on the front end, then that is good deal for the city. It is very rare that a city is this progressive, we almost never do the math on what it is going to cost to maintain it. Even if we built out that entire neighborhood at eight units an acre, we would not be getting enough property taxes out there to maintain the infrastructure it would require. This is what makes this a planning issue. It is not an issue about one proposal.

I trust the Fire Department memos too, but they are memos about a single proposal. They are not about what it means for us to be consistent if we vote this one proposal in and then subsequently try to be consistent about the proposals that come afterwards. If we rezone this RSF-2 or RSF-4, I think that makes us obligated for those that vote yes to do it again the next time another one comes through. This is why we go through these exercises every five years with our city plans and why we have these future land use maps because we are trying to figure out where we want the growth to occur. What we have decided as a city is that it is better for our city to grow in a more compact way than the dispersed way we have been growing for the past 20 years. A lot of it has to do not with philosophy or ideology like some people might think, but with real math calculations. It just cost more to build 500 feet of road or sewer pipe for eight homes than it does for 20 homes on a more compact block. We need to consider the very long term ramifications we will have if we let pristine agricultural land go over to development where we may need it to be agriculture in the future.

Alderman Marsh: I have several concerns about this. Looking at the map, this property is served by several dead end streets and so there is only one way in and out of this development. As we saw recently on Rodgers Drive when the road collapsed and the residents were at risk of not being able to be accessed by emergency services. Although this is relatively flat and probably not going to collapse, we could have an ice storm or tree down and not get services to these neighborhoods.

It is located well outside Rupple Road which I supported because it was sold to me as being part of the box around our city in an urban growth boundary. I would want to see a compelling reason to approve any kind of density increase outside of that box and I don't see any compelling reasons here. I can't support this and I will support staff's decision.

Alderman Petty moved to suspend the rules and go to the second reading. Alderman Gray seconded the motion. Upon roll call the motion passed unanimously.

UNOFFICIAL

City Attorney Kit Williams read the ordinance.

Alderman Petty moved to suspend the rules and go to the third and final reading. Alderman Long seconded the motion. Upon roll call the motion passed unanimously.

City Attorney Kit Williams read the ordinance.

A**lderman Kinion:** As we move forward we will look at this area through the Water & Sewer Committee. With Alderman Petty's insight, we have to consider how we are going to pay for this in the long run. We will have to do that when we look at cost associated with the maintenance.

Mayor Jordan asked shall the ordinance pass. Upon roll call the ordinance failed unanimously.

This ordinance failed.

RZN 14-4725 (1974 N. Gregg Ave./Gibson): An ordinance rezoning that property described in rezoning petition RZN 14-4725, for approximately 0.65 acres, located at 1974 N. Gregg Avenue from RSF-4, Residential Single Family, 4 units per acre, to RMF-24, Residential Multi-Family, 24 units per acre.

City Attorney Kit Williams read the ordinance.

Jeremy Pate, Director of Development Services gave a brief description of the ordinance. Staff is supportive of this rezoning. Planning Commission voted 6-0 in favor of the rezoning.

Maylon Gibson, Property Owner stated the property was bordered on both sides by apartments and is the only logical use for it.

Alderman Petty moved to suspend the rules and go to the second reading. Alderman Tennant seconded the motion. Upon roll call the motion passed unanimously.

City Attorney Kit Williams read the ordinance.

Alderman Petty moved to suspend the rules and go to the third and final reading. Alderman Adams seconded the motion. Upon roll call the motion passed unanimously.

City Attorney Kit Williams read the ordinance.

Mayor Jordan asked shall the ordinance pass. Upon roll call the ordinance passed unanimously.

Ordinance 5694 as Recorded in the office of the City Clerk

UNOFFICIAL

VAC 14-4740 (514 W. MLK BLVD/Filbeck): An ordinance approving VAC 14-4740 submitted by Blew and Associates for property located at 514 W. MLK Blvd to vacate an existing utility easement.

City Attorney Kit Williams read the ordinance.

Jeremy Pate, Director of Development Services gave a brief description of the ordinance. Planning Commission voted 6-0 in favor. Staff is recommending the utility easements be vacated.

Alderman Petty moved to suspend the rules and go to the second reading. Alderman Marsh seconded the motion. Upon roll call the motion passed unanimously.

City Attorney Kit Williams read the ordinance.

Alderman Gray moved to suspend the rules and go to the third and final reading. Alderman Marsh seconded the motion. Upon roll call the motion passed unanimously.

City Attorney Kit Williams read the ordinance.

Mayor Jordan asked shall the ordinance pass. Upon roll call the ordinance passed unanimously.

Ordinance 5695 as Recorded in the office of the City Clerk

City Council Agenda Session Presentations: None

City Council Tour: None

<u>Announcements:</u>

Alderman Gray: We have a Ward 1 meeting on July 17, 2014 at the Senior Center on South College at 6:00 p.m.

Don Marr, Chief of Staff: Tomorrow, July 2, 2014 at 5:00 p.m. we will be having the ribbon cutting ceremony for the completion of the Highway 71B Flyover.

First Thursday is July 3, 2014 on our historic downtown square.

The Fayetteville Freedom Fireworks will be at the Northwest Arkansas Mall at 7:00 p.m. on July 3, 2014. You can use the new Flyover to access the mall.

In our region this weekend is the 70th Annual Rodeo of the Ozarks which is July 2-5, 2014.

UNOFFICIAL

We want to remind citizens that our Ordinance allows for the shooting of fireworks starting today between 10:00 a.m. and 10:00 p.m. through the 4th of July. No bottle rockets.

The City of Fayetteville offices will be closed on Friday, July 4, 2014 for the Independence Day holiday.

Adjournment: 7:00 p.m.

Lioneld Jordan, Mayor	**Sondra E. Smith, City Clerk/Treasurer**

UNOFFICIAL

CITY OF Fayetteville ARKANSAS

CITY COUNCIL AGENDA MEMO

MEETING OF JULY 15, 2014

TO: Mayor and City Council

THRU: Don Marr, Chief of Staff

FROM: Jeremy Pate, Development Services Director

DATE: June 19, 2014

SUBJECT: **Spring Street Parking Deck-Amendment No. 1 to the Contract with Baldwin and Shell**

RECOMMENDATION:
Staff recommends approval of a resolution to approve a contract amendment with Baldwin & Shell Constructon Company in an amount not to exceed $447,948 for construction phase services related to demolition of the Walton Arts Center Administration offices and excavation for the Spring Street Parking Deck.

BACKGROUND:
Included with the tentative and final agenda packets is a staff report detailing the background of this project, along with a draft copy of the contract agreement that is being submitted in its final form.

DISCUSSION:
On Monday, July 14, city staff received a final contract amendment proposal from Baldwin & Shell Construction Company, after they had discussed in detail the project with the low bidder for demolition and excavation services, CO-BAR Contracting. This completes the procurement process for phase 1 of construction. Attached to this memo is the Guaranteed Maximum Price Amendment, serving as Exhibit A to the already approved contract with Baldwin & Shell. The contract agreement is between the City of Fayetteville and Baldwin & Shell as our construction manager, and includes the construction services identified in Attachment "B", generally described as site mobilization, site preparation, demolition and earthwork/mass excavation. Allowances have been included for hazardous materials abatement, undercut/replacement of unsuitable soils, and embankment shoring. If these particular items are not utilized, the savings will be realized by the City. Not included in this contract is rock excavation, contingency, testing (not necessary at this phase), and utility company charges. Staff is preparing utility relocation agreements and testing services under separate items for Council approval.

At this time staff is requesting the Council approve a contract amendment to allow for demolition and excavation, understanding that these are necessary construction items to begin the project. The remainder of the project will be advertised for bidding in the coming weeks, with a Council action required most likely in September.

BUDGET/STAFF IMPACT:
The Construction Manager's estimate for these construction phase services at the time of Design Development drawings (April 2014) was $614,127. This contract amount is not to exceed $447,948. Funding for this first amendment of the contract is coming from parking revenue bond proceeds and parking funds budgeted for the project.

Attachments:
Contract Amendment No. 1

AIA® Document A133™ – 2009 Exhibit A

Guaranteed Maximum Price Amendment

for the following PROJECT:
(Name and address or location)

Bid Package No. 1 - Site Preparation, Demolition, and Mass Excavation for the Spring Street Parking Deck
229 North School Avenue
Fayetteville, AR 72701

THE OWNER:
(Name, legal status and address)

City of Fayetteville
113 West Mountain
Fayetteville, Arkansas 72701

THE CONSTRUCTION MANAGER:
(Name, legal status and address)

Baldwin & Shell Construction Company
593 Horsebarn Road, Suite 100
Rogers, AR 72758

ADDITIONS AND DELETIONS:
The author of this document has added information needed for its completion. The author may also have revised the text of the original AIA standard form. An *Additions and Deletions Report* that notes added information as well as revisions to the standard form text is available from the author and should be reviewed. A vertical line in the left margin of this document indicates where the author has added necessary information and where the author has added to or deleted from the original AIA text.

This document has important legal consequences. Consultation with an attorney is encouraged with respect to its completion or modification.

AIA Document A201™–2007, General Conditions of the Contract for Construction, is adopted in this document by reference. Do not use with other general conditions unless this document is modified.

ARTICLE A.1
§ A.1.1 Guaranteed Maximum Price
Pursuant to Section 2.2.6 of the Agreement, the Owner and Construction Manager hereby amend the Agreement to establish a Guaranteed Maximum Price. As agreed by the Owner and Construction Manager, the Guaranteed Maximum Price is an amount that the Contract Sum shall not exceed. The Contract Sum consists of the Construction Manager's Fee plus the Cost of the Work, as that term is defined in Article 6 of this Agreement.

§ A.1.1.1 The Contract Sum is guaranteed by the Construction Manager not to exceed Four hundred forty-seven thousand nine hundred forty-eight dollars ($ 447,948), subject to additions and deductions by Change Order as provided in the Contract Documents.

§ A.1.1.2 Itemized Statement of the Guaranteed Maximum Price. Provided below is an itemized statement of the Guaranteed Maximum Price organized by trade categories, allowances, contingencies, alternates, the Construction Manager's Fee, and other items that comprise the Guaranteed Maximum Price.
(Provide below or reference an attachment.)

Refer to Attachment "B"

§ A.1.1.3 The Guaranteed Maximum Price is based on the following alternates, if any, which are described in the Contract Documents and are hereby accepted by the Owner:
(State the numbers or other identification of accepted alternates. If the Contract Documents permit the Owner to accept other alternates subsequent to the execution of this Amendment, attach a schedule of such other alternates showing the amount for each and the date when the amount expires.)

None

AIA Document A133™ – 2009 Exhibit A. Copyright © 1991, 2003 and 2009 by The American Institute of Architects. **All rights reserved. WARNING: This AIA® Document is protected by U.S. Copyright Law and International Treaties. Unauthorized reproduction or distribution of this AIA® Document, or any portion of it, may result in severe civil and criminal penalties, and will be prosecuted to the maximum extent possible under the law.** This document was produced by AIA software at 13:56:55 on 07/14/2014 under Order No.2266540055_1 which expires on 05/22/2015, and is not for resale.
User Notes: (1886667123)

§ **A.1.1.4** Allowances included in the Guaranteed Maximum Price, if any:
(Identify allowance and state exclusions, if any, from the allowance price.)
Refer to Attachment "A".

(Table deleted)
§ **A.1.1.5** Assumptions, if any, on which the Guaranteed Maximum Price is based:
Refer to Attachment "A".

§ **A.1.1.6** The Guaranteed Maximum Price is based upon the following Supplementary and other Conditions of the Contract:
None
(Table deleted)
§ **A.1.1.7** The Guaranteed Maximum Price is based upon the following Specifications:
(Either list the Specifications here, or refer to an exhibit attached to this Agreement.)
Refer to Attachment "C".

(Table deleted)
§ **A.1.1.8** The Guaranteed Maximum Price is based upon the following Drawings:
(Either list the Drawings here, or refer to an exhibit attached to this Agreement.)
Refer to Attachment "D".

(Table deleted)
§ **A.1.1.9** The Guaranteed Maximum Price is based upon the following other documents and information:
(List any other documents or information here, or refer to an exhibit attached to this Agreement.)
Refer to Attachment "A".

ARTICLE A.2
§ **A.2.1** The anticipated date of Substantial Completion established by this Amendment:
will be established in a Notice to Proceed

CITY OF FAYETTEVILLE *(Signature)*	**BALDWIN & SHELL CONSTRUCTION COMPANY** *(Signature)*
Lioneld Jordan, Mayor	Patrick Tenney, AIA, President NWA Division
(Printed name and Title)	*(Printed name and Title)*
ATTEST:	**ATTEST:**
Sandra Smith, City Clerk	Leslie Fann, Administrative Assistant

AIA Document A133™ – 2009 Exhibit A. Copyright © 1991, 2003 and 2009 by The American Institute of Architects. **All rights reserved.** WARNING: This AIA® Document is protected by U.S. Copyright Law and International Treaties. Unauthorized reproduction or distribution of this AIA® Document, or any portion of it, may result in severe civil and criminal penalties, and will be prosecuted to the maximum extent possible under the law. This document was produced by AIA software at 13:56:55 on 07/14/2014 under Order No.2266540055_1 which expires on 05/22/2015, and is not for resale.
User Notes:

Additions and Deletions Report for

AIA® Document A133™ – 2009 Exhibit A

This Additions and Deletions Report, as defined on page 1 of the associated document, reproduces below all text the author has added to the standard form AIA document in order to complete it, as well as any text the author may have added to or deleted from the original AIA text. Added text is shown underlined. Deleted text is indicated with a horizontal line through the original AIA text.

Note: This Additions and Deletions Report is provided for information purposes only and is not incorporated into or constitute any part of the associated AIA document. This Additions and Deletions Report and its associated document were generated simultaneously by AIA software at 13:56:55 on 07/14/2014.

PAGE 1

Bid Package No. 1 - Site Preparation, Demolition, and Mass Excavation for the
Spring Street Parking Deck
229 North School Avenue
Fayetteville, AR 72701

...

City of Fayetteville
113 West Mountain
Fayetteville, Arkansas 72701

...

Baldwin & Shell Construction Company
593 Horsebarn Road, Suite 100
Rogers, AR 72758

...

§ **A.1.1.1** The Contract Sum is guaranteed by the Construction Manager not to exceed Four hundred forty-seven thousand nine hundred forty-eight dollars ($ 447,948), subject to additions and deductions by Change Order as provided in the Contract Documents.

...

Refer to Attachment "B"

...

None

PAGE 2

Refer to Attachment "A".

~~Item~~ ~~Price ($0.00)~~

...

Refer to Attachment "A".

Additions and Deletions Report for AIA Document A133™ – 2009 Exhibit A. Copyright © 1991, 2003 and 2009 by The American Institute of Architects. **All rights reserved. WARNING: This AIA® Document is protected by U.S. Copyright Law and International Treaties. Unauthorized reproduction or distribution of this AIA® Document, or any portion of it, may result in severe civil and criminal penalties, and will be prosecuted to the maximum extent possible under the law.** This document was produced by AIA software at 13:56:55 on 07/14/2014 under Order No.2266540055_1 which expires on 05/22/2015, and is not for resale.
User Notes: (1886667123)

...

None

~~Document~~	~~Title~~	~~Date~~	~~Pages~~

...

Refer to Attachment "C".

~~Section~~	~~Title~~	~~Date~~	~~Pages~~

...

Refer to Attachment "D".

~~Number~~	~~Title~~	~~Date~~

...

Refer to Attachment "A".

...

will be established in a Notice to Proceed

...

~~OWNER~~ CITY OF FAYETTEVILLE *(Signature)*	~~CONSTRUCTION MANAGER~~ BALDWIN & SHELL CONSTRUCTION COMPANY *(Signature)*
Lioneld Jordan, Mayor	Patrick Tenney, AIA, President NWA Division
(Printed name and ~~title~~)Title)	*(Printed name and ~~title~~)Title)*
ATTEST:	**ATTEST:**
Sandra Smith, City Clerk	Leslie Fann, Administrative Assistant

Additions and Deletions Report for AIA Document A133™ – 2009 Exhibit A. Copyright © 1991, 2003 and 2009 by The American Institute of Architects. **All rights reserved. WARNING: This AIA® Document is protected by U.S. Copyright Law and International Treaties. Unauthorized reproduction or distribution of this AIA® Document, or any portion of it, may result in severe civil and criminal penalties, and will be prosecuted to the maximum extent possible under the law.** This document was produced by AIA software at 13:56:55 on 07/14/2014 under Order No.2266540055_1 which expires on 05/22/2015, and is not for resale.
User Notes: (1886667123)

Certification of Document's Authenticity

AIA® Document D401™ – 2003

I, Patrick Tenney, hereby certify, to the best of my knowledge, information and belief, that I created the attached final document simultaneously with its associated Additions and Deletions Report and this certification at 13:56:55 on 07/14/2014 under Order No. 2266540055_1 from AIA Contract Documents software and that in preparing the attached final document I made no changes to the original text of AIA® Document A133™ – 2009 Exhibit A, Guaranteed Maximum Price Amendment, as published by the AIA in its software, other than those additions and deletions shown in the associated Additions and Deletions Report.

Pat Tenney

(Signed)

PRESIDENT NWA DIVISION

(Title)

07.14.2014

(Dated)

AIA Document D401™ – 2003. Copyright © 1992 and 2003 by The American Institute of Architects. **All rights reserved. WARNING: This AIA® Document is protected by U.S. Copyright Law and International Treaties. Unauthorized reproduction or distribution of this AIA® Document, or any portion of it, may result in severe civil and criminal penalties, and will be prosecuted to the maximum extent possible under the law.** This document was produced by AIA software at 13:56:55 on 07/14/2014 under Order No.2266540055_1 which expires on 05/22/2015, and is not for resale.

User Notes: (1886667123)

BALDWIN & SHELL
CONSTRUCTION COMPANY

Attachment "A", of
AIA Document A133-2009, Exhibit A
Bid Package No. 1
Spring Street Parking Deck
City of Fayetteville and
Baldwin & Shell Construction Company
Dated April 16, 2013

July 15, 2014

Mr. Jeremy Pate, Director Development Services
City of Fayetteville
113 West Mountain
Fayetteville, AR 72701

Re: Spring Street Parking Deck
Bid Package No. 1

Dear Jeremy,

As you are aware, we opened sealed bids for the Site Preparation, Demolition, and Earthwork (Bid Package No. 1) component of the parking deck on July 8, 2014. We received bids from 4 contractors for this package of work. This completes the procurement phase of this portion of the project and we are pleased to present this Guaranteed Maximum Price (GMP) proposal.

Refer to Attachment "B" for itemized breakdown of this proposal.

Pricing is based on specifications and drawings as listed in Attachments "C" and "D".

We are hereby requesting approval of the following proposed Guaranteed Maximum Price:

- Proposed **Guaranteed Maximum Price (GMP)** **$447,948**

We have estimated construction duration of 60 calendar days to achieve Substantial Completion.

Please note the following **Allowances** which are included:

- Hazardous Materials Assessment / Abatement $7,700
- Embankment Shoring $30,000
- Undercut & replace 1,700 C.Y. unsuitable soils $24,650

Please note the following **Qualifications** to this proposal:

- This proposal is based on use of CO-BAR Contracting's bid proposal. In the event CO-BAR Contracting fails to execute a subcontract with Baldwin & Shell or fails to furnish the required Performance and Payment Bonds; Baldwin and Shell will utilize the next bidder and will be entitled to a corresponding adjustment in contract sum.

- All drawings are noted "FOR INFORMATION ONLY NOT FOR CONSTRUCTION". Pricing adjustments may be necessary after issuance of Final Construction Documents.

Please note the following items which we respectfully **Exclude**:

- Contingency
- Impact fees / utility connection fees
- Utility company charges
- Rock excavation
- Undercut of unsuitable soils beyond allowance
- Testing

Please note the following **Unit Prices:**

1.	Undercut unsuitable material and replace with specified fill material.	$15.61 / C.Y.
2.	Mass rock excavation.	$107.66 / C.Y.
3.	Trench rock excavation.	$107.66 / C.Y.

For accounting purposes, the breakout cost of this proposal to be allocated to construction of the North Liner Basement is $40,227.

Please do not hesitate to contact me if you have any questions whatsoever. We are ready to be of service.

Sincerely
Baldwin & Shell Construction Company

Patrick Tenney, AIA | President
Northwest Arkansas Division

Cc: Mr. Ron Petrie, P.E.

Enclosures

H:\Jobs\NW Arkansas Jobs\2258 - Fayetteville Entertainment Parking Deck\Contract Documents & Change Orders\Owner Contract & Change Orders\Contract & Exhibits

BALDWIN & SHELL
CONSTRUCTION COMPANY

Attachement "B", of
AIA Document A133-2009, Exhibit A
Bid Package No. 1
Spring Street Parking Deck
City of Fayetteville and
Baldwin Shell Construction Company
Dated April 16, 2013

	PROJECT NAME :	**Spring Street Parking Deck**			
		Bid Package No. 1			
	DATE :	**7/15/14**			
	AMOUNT :	**$447,948**			
	BUILDING AREA :	**102,551**	**SF**		
	COST / SF :	**4.37**			
NO.	**ITEM NAME**	**COST**	**COST/SF**	**%TOTAL**	**COMMENTS**
600	Performance Bond	3,651	0.04	0.82%	
601	Insurance	3,298	0.03	0.74%	
602	Flood & Earthquake Insurance Deductibles	0	0.00	0.00%	
603	Preconstruction Fee	0	0.00	0.00%	
604	Fee	23,352	0.23	5.21%	
1,000	Permits	424	0.00	0.09%	
1,011	Contingency	0	0.00	0.00%	
1,400	Testing	0	0.00	0.00%	BY OWNER
1,450	Document Reproductions	1,098	0.01	0.25%	
1,455	Mobilization	22,816	0.22	5.09%	
1,460	Temporary Fencing, Barricades	32,993	0.32	7.37%	
1,465	Traffic Control	9,087	0.09	2.03%	
1,500	General Conditions	74,029	0.72	16.53%	
2,150	Hazardous Materials Assessment/Abatement	7,700	0.08	1.72%	ALLOWANCE
2,200	Site Preparation, Demolition, Earthwork	214,850	2.10	47.96%	COBAR CONTRACTING
2,250	Undercut/Replace Unsuitable Soils	24,650	0.24	5.50%	ALLOWANCE
2,260	Embankment Shoring	30,000	0.29	6.70%	ALLOWANCE
	TOTAL PROJECT	**447,948**	**4.37**	**100.00%**	

Attachment "C"

Bid Package No. 1 - Spring Street Parking Deck

Specifications

All Specifications are dated June 23, 2014

Specifications Section Number	Title	Pages
	VOLUME 1 of 4	
	CONTRACT DOCUMENTS AND GENERAL REQUIREMENTS	
DIVISION 00 - BIDDING AND CONTRACTION REQUIREMENT		
00 00 01	Certifications	1
00 01 10	Table of Contents	1
00 70 00	AIA 201 - General Conditions of the Contract for Construction	1-50
00 73 00	Wage Rate Requirements	1-6
DIVISION 1 - GENERAL REQUIREMENTS		
01 11 00	Summary of Work	1
01 12 00	Project Meetings	1-2
01 26 00	Contract Modification Procedures	1-3
01 31 00	Project Management and Coordination	1-6
01 32 00	Construction Progress Documentation	1-5
01 33 00	Submittal Procedures	1-5
01 42 00	References	1-3
01 45 29	Testing Laboratory	1-10
01 50 00	Temporary Facilities and Controls	1-8
01 77 00	Closeout Procedures	1-3
	VOLUME 2 OF 4	
	TECHNICAL SPECIFICATIONS	
DIVISION 2 - EXISTING CONDITIONS		
02 41 00	Demolition	1-8
DIVISION 31 - EARTHWORK		
31 11 00	Site Preparation	1-3
31 22 13	Subgrade Preparation	1-2
31 22 19	Grading	1-3
31 23 16	Excavation	1-3
31 23 19	Dewatering	1-2
31 23 23.13	Fill and Backfill	1-5
31 32 00	Soil Erosion Stabilization	1-8
31 50 00	Excavation Support Systems	1-2
	VOLUME 3 OF 4	
	ADDITIONAL REFERENCE INFORMATION	
APPENDIX A-	Wage Rate Determination	1-6
APPENDIX B-	Geotechnical Report	1-41
APPENDIX C-	Asbestos Analysis Report	1-4
APPENDIX D-	Storm Water Pollution Prevention Plan	1-13
	VOLUME 4 OF 4	
	DRAWINGS	

CityClerk

From: Marr, Don
Sent: Tuesday, June 24, 2014 9:20 AM
To: CityClerk
Subject: RE: Gift to present at City Council meeting

Yes, that would be fine.
Thanks,
D

Don Marr
Chief of Staff
Office of the Mayor
City of Fayetteville Arkansas
T 479.575.8330 | F 479.575.8257
website | facebook | twitter | youtube

-----Original Message-----
From: CityClerk
Sent: Tuesday, June 24, 2014 7:42 AM
To: Marr, Don; Jordan, Lioneld
Subject: FW: Gift to present at City Council meeting

Do you approve adding this presentation to the July 15th City Council meeting?

Lisa

Office of the City Clerk Treasurer
113 W. Mountain Street, Suite 308
Fayetteville, AR 72701
479.575.8323
cityclerk@fayetteville-ar.gov
Website | Facebook | Twitter | YouTube

-----Original Message-----
From: Lewis, Spenser A SrA USAF ANG 188 WG/FM [mailto:spenser.lewis@ang.af.mil]
Sent: Tuesday, June 24, 2014 7:34 AM
To: CityClerk
Subject: Gift to present at City Council meeting

Good Morning,

I work for the 188th Arkansas Air National Guard Unit in Ft. Smith and we have a gift that we would like to present to the city of Fayetteville. It is a picture of an A-10 Warthog aircraft that bears the name of the city of Fayetteville. The 188th has requested that residents of Fayetteville present this photograph to the city, so myself and a couple others who live in Fayetteville have volunteered. Last Friday I came by your office to get some information about the Fayetteville city

council meetings. We would like to try to present the photograph at the July 15th council meeting. Would this be ok? Please let me know.

Thank you.

Spenser Lewis, SrA, AR ANG
Finance Systems Support
188th Wing
DSN 778-5277
COMM 479-573-5277

Branson, Lisa

From: Marr, Don
Sent: Wednesday, June 18, 2014 3:09 PM
To: Branson, Lisa
Subject: Re: Audit Reports for 2013

Yes - Lisa, please add this to the agenda.
Don

Sent from my iPhone

On Jun 18, 2014, at 2:55 PM, "Branson, Lisa" < > wrote:

Do you approve adding the below to the July 15th agenda? There are currently no reports etc. on the agenda.

Office of the City Clerk Treasurer
Lisa Branson, CMC
Deputy City Clerk
113 W. Mountain Street, Suite 308
Fayetteville, AR 72701
479.575.8323

<image001.jpg>

From: Becker, Paul
Sent: Wednesday, June 18, 2014 12:51 PM
To: Branson, Lisa
Cc: Hertweck, Marsha
Subject: Audit Reports for 2013

Lisa
Please schedule the following reports on the July 8 2014 Agenda Session and July 15 City Council Meeting.
Agenda Session July 8 2014 -2013 Audit Management Report-Judy Jacobs Audit Committee Chair
Council Meeting July 15 2014 -2013 Audit Report-Paul Becker Finance and Internal Services Director
Thanks
Paul

Paul Becker
Chief Financial Officer
Office of the Mayor
City of Fayetteville, Arkansas 72701
T 479.575.8330 | **F** 479.575.8257 | **M** 479.601.3577

<image003.png>

Alderman Adella Gray
Ward 1 Position 1

Alderman Sarah Marsh
Ward 1 Position 2

Alderman Mark Kinion
Ward 2 Position 1

Alderman Matthew Petty
Ward 2 Position 2

Mayor Lioneld Jordan
City Attorney Kit Williams
City Clerk Sondra E. Smith

Alderman Justin Tennant
Ward 3 Position 1

Alderman Martin W. Schoppmeyer, Jr.
Ward 3 Position 2

Alderman Rhonda Adams
Ward 4 Position 1

Alderman Alan T. Long
Ward 4 Position 2

Tentative Agenda
City of Fayetteville Arkansas
City Council Meeting
July 15, 2014

A meeting of the Fayetteville City Council will be held on July 15, 2014 at 5:30 PM in Room 219 of the City Administration Building located at 113 West Mountain Street, Fayetteville, Arkansas.

Call to Order

Roll Call

Pledge of Allegiance

Mayor's Announcements, Proclamations and Recognitions:

City Council Meeting Presentations, Reports and Discussion Items:

1. 188th Arkansas Air National Guard Unit Fort Smith Presentation
2. International Institute of Municipal Clerks Certified Municipal Clerk Presentation and Arkansas City Clerks, Recorders, and Treasurers Association Certified Arkansas Municipal Clerk Presentation
3. Adrian White Municipal Leadership Award Presentation
4. 2013 Audit Report-Paul Becker Finance and Internal Services Director

Agenda Additions:

A. Consent:

1. Approval of the July 01, 2014 City Council meeting minutes.

2. **Bid #14-28 Scruggs Equipment Co.:** A resolution to award Bid #14-28 to Scruggs Equipment Co. of Memphis, Tennessee and to authorize the purchase of an RS Technical Services Trak-Star Van with pipeline television inspection system in the amount of $139,685.00 for use by the Water and Sewer Operations Division.

3. **Bid #14-35 Industrial Precast, Inc.:** A resolution to award Bid #14-35 and authorize the purchase of retaining wall blocks from Industrial Precast, Inc. in variable amounts as needed, and to authorize the use of other bidders based on price and availability as needed through the end of calendar year 2014.

4. **Bid #14-37 Carter Waters:** A resolution to award Bid #14-37 and authorize the purchase of cold asphalt concrete from Carter Waters for a unit price of $116.82 per ton, as needed, and to authorize the use of other bidders based on price and availability as needed through the end of calendar year 2014.

5. **Bid #14-32 Future Link of Illinois, Inc.:** A resolution to award Bid #14-32 and authorize the purchase of thirty-five (35) Mobile Computer Systems from Future Link of Illinois, Inc. in the amount of $150,500.00 for use in Fayetteville Police patrol vehicles.

6. **Hazmat Services Revenue:** A resolution to approve a budget adjustment recognizing hazmat services revenue received by the Fire Department since February 2014.

7. **Pierce Manufacturing, Inc.:** A resolution to approve a bid from Pierce Manufacturing, Inc. pursuant to the Houston-Galveston Area Council contract #800-926-0234 for a pierce 75 foot Heavy Duty Aluminum Ladder Fire Truck in the amount of $807,259.00 plus a contingency of $16,146.00.

8. **Plante and Moran, PLLC:** A resolution to approve an extension to the contract with Plante and Moran, PLLC for information technology services through the end of 2014 in the amount of $106,470.00, and to approve a budget adjustment.

9. **Public Access Television Fee Revenue:** A resolution to approve a budget adjustment in the amount of $4,000.00 recognizing public access television fee revenue to be used for promotional activities.

10. **Walton Family Foundation Grant Acceptance – Town Branch Trail:** A resolution to express the City Council's thanks and gratitude to the Walton Family Foundation for its generous $815,000.00 matching grant for the completion of Town Branch and Tsa-La-Gi Trails, to approve the grant agreement and to approve a budget adjustment to recognize this $815,000.00 grant.

11. **Walton Family Foundation Grant Acceptance – Cato Springs Trail Design**: A resolution to express the City Council's thanks and gratitude to the Walton Family Foundation for its generous $150,000.00 matching grant for the design and engineering of the Cato Springs Trail, to approve the grant agreement and to approve a budget adjustment to recognize this $150,000.00 grant.

12. **Yvonne Richardson Community Center: A** resolution to approve a budget adjustment in the total amount of $28,202.00 representing donation revenue to the Yvonne Richardson Community Center for the first half of 2014.

13. **Urban Sustainability Directors Network:** A resolution to authorize acceptance of a grant from the Urban Sustainability Directors Network in the amount of $2,465.00, and to approve a budget adjustment.

14. **Evans Construction and Remodeling, LLC:** A resolution to authorize a contract with Evans Construction and Remodeling, LLC in the amount of $38,190.00 for Community Development Block Grant Rehabilitation of an eligible residence located at 1211 N. Starr Drive.

15. **Sourcegas Arkansas, Inc.:** A resolution to approve a utility work agreement with Sourcegas Arkansas, Inc. in the amount of $39,804.79 for the relocation of gas mains and facilities necessary for the Spring Street Parking Deck Project, and to approve a project contingency of $8,000.00.

16. **Harvey Dowell Road Sewer Service Extension:** A resolution to approve the extension of the City's sewerage system beyond the city limits to a single residence located at 55 S. Harvey Dowell Road.

B. Unfinished Business: None

C. New Business:

1. **RZN 14-4703 (Northeast Corner of Wedington and Rupple Road/Wedington Zone 2):** An ordinance rezoning that property described in rezoning petition RZN 14-4703, for approximately 6.88 acres, located at the northeast corner of Wedington and Rupple Road from C-1, Neighborhood Commercial, C-2, Thoroughfare Commercial, and I-PZD, Industrial Planned Zoning District Westside Mini-Storage to CS, Community Services.

2. **RZN 14-4729 (Cato Springs Rd./Chambers Bank):** An ordinance rezoning that property described in rezoning petition RZN 14-4729, for approximately 253.23 acres, located along Cato Springs Road adjacent to the City's Regional Park property from R-PZD, Residential Planned Zoning District Southpass 08-2898, to UT, Urban Thoroughfare, CS, Community Services, and NC, Neighborhood Conservation.

3. **RZN 14-4731 (Regional Park/Mt. Kessler Reserve**): An ordinance rezoning that property described in rezoning petition RZN 14-4731, for approximately 630 acres, located at Mt. Kessler Regional Park from R-PZD, Residential Planned Zoning District Southpass 08-2898, to P-1, Institutional.

4. **VAC 14-4753 (1560 S. Happy Hollow Rd/Recycling and Trash Collection Facility:** An ordinance approving VAC 14-4753 submitted by city staff for property located at 1560 S. Happy Hollow Road to vacate existing street right-of-way for Happy Hollow Road.

5. **Baldwin & Shell Construction Company:** A resolution to authorize an amendment to the contract with Baldwin & Shell Construction Company for demolition and mass excavation services for the Spring Street Parking Deck.

6. **Repeal §178.05 Food Truck Limited Time Permits:** An ordinance to repeal §178.05 Food Truck Limited Time Permits and enact a replacement §178.05 Food Truck and Food Trailer Limited Time Permits.

7. **Enact Chapter 119 Civil Rights Administration:** An ordinance to amend the Fayetteville Code by enacting Chapter 119 Civil Rights Administration to protect the Civil Rights of Fayetteville citizens and visitors and to create the position of Civil Rights Administrator for the City of Fayetteville.

City Council Agenda Session Presentations:

1. 2013 Audit Management Report-Judy Jacobs Audit Committee Chair

D. City Council Tour:

E. Announcements:

Adjournment:

NOTICE TO MEMBERS OF THE AUDIENCE

All interested persons may address the City Council on agenda items of New and Old Business. Please wait for the Mayor to request public comment and then come to the podium, give your name, address, and comments about the agenda item. Please address only the Mayor. Questions are usually answered by the Mayor, Aldermen or Staff after the public comment period is over. Please keep your comments brief and respectful. Each person is only allowed one turn at the microphone for discussion of an agenda item.

All cell phones must be silenced and may not be used within the City Council Chambers.

Below is a portion of the **Rules of Order and Procedure of the Fayetteville City Council** pertaining to City Council meetings:

> **Agenda additions.** A new item which is requested to be added to the agenda at a City Council meeting should only be considered if it requires immediate City Council consideration and if the normal agenda setting process is not practical. The City Council may only place such new item on the City Council meeting's agenda by suspending the rules by two-thirds vote. Such agenda addition shall be heard prior to the Consent Agenda.
>
> **Consent Agenda.** Consent Agenda items shall be read by the Mayor and voted upon as a group without discussion by the City Council. If an Alderman wishes to comment upon or discuss a Consent Agenda item that item shall be removed and considered immediately after the Consent Agenda has been voted upon.
>
> **Old business and new business.**

Presentations by staff and applicants. Agenda items shall be introduced by the Mayor and, if an ordinance, read by the City Attorney. City staff shall then present a report. An agenda applicant (city contractor, rezoning or development applicant, etc.) may present its proposal only during this presentation period, but may be recalled by an alderman later to answer questions. Staff and applicants may use electronic visual aids in a City Council meeting as part of their presentation.

Public comments. Public comment shall be allowed for all members of the audience on all items of old and new business and subjects of public hearings. No electronic visual aid presentations shall be allowed, but the public may submit photos, petitions, etc. to be distributed to the City Council. If a member of the public wishes for the City Clerk to distribute materials to the City Council before its meeting, such materials should be supplied to the City Clerk office no later than 9:00 a.m. on the day of the City Council meeting. Any member of the public shall first state his or her name and address, followed by a concise statement of the person's position on the question under discussion. Repetitive comments should be avoided; this applies to comments made previously either to the City Council or to the Planning Commission when those Planning Commission minutes have been provided to the Aldermen. All remarks shall be addressed to the Mayor or the City Council as a whole and not to any particular member of the City Council. No person other than the Aldermen and the person having the floor shall be permitted to enter into any discussions without permission of the Mayor. No questions shall be directed to an Alderman or city staff member except through the Mayor.

Courtesy and respect. All members of the public, all city staff and elected officials shall accord the utmost courtesy and respect to each other at all times. All shall refrain from rude or derogatory remarks, reflections as to integrity, abusive comments and statements about motives or personalities. Any member of the public who violates these standards shall be ruled out of order by the Mayor, must immediately cease speaking and shall leave the podium.

Interpreters or TDD for hearing impaired are available for all City Council meetings, a 72 hour advance notice is required. For further information or to request an interpreter, please call (479) 575-8330.

A copy of the complete City Council agenda is available at www.fayetteville-ar.gov or in the office of the City Clerk, 113 W. Mountain, Fayetteville, Arkansas.

City of Fayetteville Staff Review Form

2014-0283

Legistar File ID

7/15/2014

City Council Meeting Date - Agenda Item Only
N/A for Non-Agenda Item

Jesse Beeks / Barbara Olsen	6/26/2014	Fleet Operations / Transportation Services Department
Submitted By	**Submitted Date**	**Division / Department**

Action Recommendation:

A resolution awarding Bid 14-28 to Scruggs Equipment Co. of Memphis, TN for the purchase of one RS Technical Services Trak-Star van with pipeline TV inspection system in the amount of $139,685 for use by Water and Sewer.

Budget Impact:

9700.1920.5802.00	9700 - Shop fund
Account Number	Fund
02080.2013	Other Vehicles and Equipment
Project Number	Project Title

Budgeted Item?	Yes	Current Budget	$	795,903.00
		Funds Obligated	$	473,266.00
		Current Balance	$	**322,637.00**
Does item have a cost?	Yes	Item Cost	$	139,685.00
Budget Adjustment Attached?	No	Budget Adjustment	$	-
		Remaining Budget	$	**182,952.00**

V20140610

Previous Ordinance or Resolution # _____

ENTERED 6/27/14

Original Contract Number: _____

Approval Date: _____

Comments:

6-30-14

Paul A. Becker 6-30-2014

Don Marr 6-30-14

CITY OF Fayetteville ARKANSAS

CITY COUNCIL AGENDA MEMO

MEETING OF JULY 15, 2014

TO: Mayor and City Council

THRU: Terry Gulley, Director of Transportation

FROM: Jesse Beeks, Fleet Operations Superintendent

DATE: June 25, 2014

SUBJECT: **Purchase of one Sewer TV Camera van for Water & Sewer**

RECOMMENDATION:
That City Council approve the purchase of one RS Technical Services Trak-Star van with pipeline TV inspection system from Scruggs Equipment Co of Memphis, TN in the amount of $139,685.

BACKGROUND:
Unit 9068 is a 2005 Ford F550 chassis with a Sewer TV Camera Van body that has over 8,000 hours. It was scheduled for replacement in 2013 and was pushed back. It is worn out and needs to be replaced.

DISCUSSION:
Bid 14-28 was opened on May 6, 2014; a copy of the bid tab is attached. Scruggs Equipment Co. of Memphis, Tennessee is the low bidder and they meet all specs.

Fleet recommends the purchase of one RS Technical Services Trak-Star van with pipeline TV inspection system off Bid 14-28 from Scruggs Equipment Co of Memphis, Tennessee in the amount of $139,685.

This purchase was approved by the Equipment Committee at the meeting of June 24, 2014.

BUDGET/STAFF IMPACT:
Sufficient replacement funds have been collected to replace this unit.

Attachments:
Bid Tab, bid 14-28
Purchase Requisition

RESOLUTION NO. _____

A RESOLUTION TO AWARD BID #14-28 TO SCRUGGS EQUIPMENT CO. OF MEMPHIS, TENNESSEE AND TO AUTHORIZE THE PURCHASE OF AN RS TECHNICAL SERVICES TRAK-STAR VAN WITH PIPELINE TELEVISION INSPECTION SYSTEM IN THE AMOUNT OF $139,685.00 FOR USE BY THE WATER AND SEWER OPERATIONS DIVISION

BE IT RESOLVED BY THE CITY COUNCIL OF THE CITY OF FAYETTEVILLE, ARKANSAS:

Section 1: That the City Council of the City of Fayetteville, Arkansas hereby awards Bid #14-28 to Scruggs Equipment Co. of Memphis, Tennessee and authorizes the purchase of an RS Technical Services Trak-Star Van with pipeline television inspection system in the amount of $139,685.00 for use by the Water and Sewer Operations Division.

PASSED and **APPROVED** this 15th day of July, 2014.

APPROVED:

By: _____
LIONELD JORDAN, Mayor

ATTEST:

By: _____
SONDRA E. SMITH, City Clerk/Treasurer

City of Fayetteville - Purchase Order Request (PO)

(Not a Purchase Order)

All PO Requests shall be scanned to the Purchasing e-mail: Purchasing@fayetteville-ar.gov.
Purchase shall not be made until an actual PO has been issued.

Requisition No.:

Date: 6/26/2014

P.O Number:

Vendor #: 88070

Vendor Name: SCRUGGS EQUIPMENT CO

Mail ☐ Yes ☑ No

Legistar#: 2014-0283

Address:

FOB Point:

Taxable ☐ Yes ☑ No

Expected Delivery Date:

City:

State:

Zip Code:

Ship to code: 50

Quotes Attached ☐ Yes ☑ No

Requester: Barbara Olsen

Requester's Employee #: 1940

Extension: 3485

Item	Description	Quantity	Unit of Issue	Unit Cost	Extended Cost	Account Number	Project.Sub#	Inventory #	Fixed Asset #
1	RS TECHNICAL SERVICES TRAK- STAR	1	EA	139,685.00	$139,685.00	9700.1920.5802.00	02080.2013		709200
2	VAN WITH PIPELINE TV INSPECTION				$0.00				
3	SYSTEM PER BID SPECS, BID 14-28				$0.00				
4	TO BE UNIT #9200, FIXED ASSET 709200				$0.00				
5					$0.00				
6					$0.00				
7					$0.00				
8					$0.00				
9					$0.00				
10					$0.00				
*	Shipping/Handling		Lot		$0.00				

Special Instructions:

Subtotal: $139,685.00
Tax: EXEMPT $0.00
Total: $139,685.00

Approvals:

Mayor: _____

Department Director: _____

Purchasing Manager: _____

Chief Financial Officer: _____

Budget Director: _____

IT Director: _____

Dispatch Manager: _____

Utilities Manager: _____

Other: _____

Revised 6/18/2014

CITY OF Fayetteville ARKANSAS

City of Fayetteville, Arkansas
Purchasing Division
OFFICIAL BID TABULATION

Bid 14-28, Sewer Camera Van
Tuesday, May 06, 2014, 2:00 PM

		BIDDER	Manufacturer	Model	Qty	Price Each	Total Base Bid Less Trade-In
4	1	**Atlas Inspection Technologies, Inc.**	Aries/Mercedes Benz	Pathfinder in Outfitted Sprinter Van	1	$ 173,139.25	**$ 173,139.25**
2	2	**Henard Utility Products, Inc.**	Cues	Summit Multi Conductor TV Inspection System	1	$ 143,000.00	**$ 143,000.00**
1	3	**Scruggs Equipment Co., Inc.**	RS Technical Services	Trak-STAR	1	$ 139,685.00	**$ 139,685.00**
3	4	**Truck Component Services**	Cobra Technologies	Mainline Truck 601 PTZ-9	1	$ 148,350.00	**$ 148,350.00**

*NOTICE: Bid award is contingent upon vendor meeting minimum specifications and formal authorization by City officials.

CERTIFIED:

Andrea Foren — A. Foren, CPPO, CPPB, Purchasing Agent

P Vice — Witness

5/6/14

City of Fayetteville Staff Review Form

2014-0289

Legistar File ID

7/15/2014

City Council Meeting Date - Agenda Item Only
N/A for Non-Agenda Item

Terry Gulley	6/27/2014	Transportation Services / Transportation Services Department
Submitted By	**Submitted Date**	**Division / Department**

Action Recommendation:

A resolution awarding Bid 14-35 to and authorizing the purchase of retaining wall blocks from Industrial Precast, Inc. for the unit prices shown on the attached bid tabulation, as needed, and authorizing the use of other bidders based on price and availability.

Budget Impact:

2100.5500.5814.00	Street
Account Number	Fund
02053/5500	Sidewalk Improvements
Project Number	Project Title

Budgeted Item?	Yes	Current Budget	$	1,042,000.00
		Funds Obligated	$	31,854.21
		Current Balance	$	**1,010,145.79**
Does item have a cost?	Yes	Item Cost	$	-
Budget Adjustment Attached?	No	Budget Adjustment	$	-
		Remaining Budget	$	**1,010,145.79**

V20140610

Previous Ordinance or Resolution # _____

ENTERED 6/27/14

Original Contract Number: _____

Approval Date: _____

Comments: The "item cost" box has been left blank because the exact item cost will vary depending upon the Transportation Division's fluctuating needs based on citizen service requests received, construction project progress, and other variable factors.

6/30/14

Paul A. Rantz 6-30-2014

7-1-14

ENTERED 6/30/14

CITY OF Fayetteville ARKANSAS

CITY COUNCIL AGENDA MEMO

MEETING OF JULY 15, 2014

TO: Mayor and City Council

THRU: Don Marr, Chief of Staff

FROM: Terry Gulley, Transportation Services Director

DATE: June 26, 2014

SUBJECT: **Bid 14-35, Retaining Wall Blocks**

RECOMMENDATION:
A resolution awarding Bid 14-35 to and authorizing the purchase of retaining wall blocks from Industrial Precast, Inc. for the unit prices shown on the attached bid tabulation, as needed, and authorizing the use of other bidders based on price and availability.

BACKGROUND:
The purchase of bulk construction materials and services is necessary to maintain current infrastructure and to implement projects outlined in the 2013-2017 Capital Improvements Program and annual budget and work program. Sealed bids in accordance with State statutes, City ordinances, and purchasing procedures were publicly read and the results are attached to this memo.

DISCUSSION:
The low bid for retaining wall blocks was submitted by Industrial Precast, Inc.

BUDGET/STAFF IMPACT:
Funds for the acquisition of materials have been budgeted in various capital projects within the Sales Tax Capital Improvements Fund and Street Fund operating programs.

Attachments:
Bid 14-35 Tabulation
Bid Submittal

RESOLUTION NO. _____

A RESOLUTION TO AWARD BID #14-35 AND AUTHORIZE THE PURCHASE OF RETAINING WALL BLOCKS FROM INDUSTRIAL PRECAST, INC. IN VARIABLE AMOUNTS AS NEEDED, AND TO AUTHORIZE THE USE OF OTHER BIDDERS BASED ON PRICE AND AVAILABILITY AS NEEDED THROUGH THE END OF CALENDAR YEAR 2014

BE IT RESOLVED BY THE CITY COUNCIL OF THE CITY OF FAYETTEVILLE, ARKANSAS:

Section 1. That the City Council of the City of Fayetteville, Arkansas hereby awards Bid #14-35 and authorizes the purchase of retaining wall blocks from Industrial Precast, Inc. in variable amounts as needed, and further authorizes the use of other bidders based on price and availability as needed through the end of calendar year 2014.

PASSED and **APPROVED** this 15th day of July, 2014.

APPROVED:

By: _____
LIONELD JORDAN, Mayor

ATTEST:

By: _____
SONDRA E. SMITH, City Clerk/Treasurer

CITY OF Fayetteville ARKANSAS

Bid: 14-35
Date: 6/26/2014
Time: 3:00 PM
City of Fayetteville

Bid 14-35, Retaining Wall Blocks

			Industrial Precast			LJB Construction		
Redi-Rock® 28" Series Wall System or Equal								
Item	DESCRIPTION	QTY	PRICE EACH		EXTENDED PRICE	PRICE EACH		EXTENDED PRICE
1	Top Block - 28" Series with Cobble Stone Face	100	$ 81.85	=	$ 8,185.00	$ 110.00	=	$ 11,000.00
2	Half Top Block - 28" Series with Cobble Stone Face	8	$ 55.60	=	$ 444.80	$ 65.00	=	$ 520.00
3	Middle Block - 28" Series with Cobble Stone Face	174	$ 91.00	=	$ 15,834.00	$ 113.50	=	$ 19,749.00
4	Half Middle Block - 28" Series with Cobble Stone Face	2	$ 58.60	=	$ 117.20	$ 65.00	=	$ 130.00
5	Bottom Block - 28" series with Cobble Stone Face	90	$ 93.75	=	$ 8,437.50	$ 113.50	=	$ 10,215.00
6	Half Bottom Block - 28" Series with Cobble Stone Face	1	$ 58.60	=	$ 58.60	$ 65.00	=	$ 65.00
7	Bottom Block - 41" Series with Cobble Stone Face	15	$ 99.50	=	$ 1,492.50	$ 150.00	=	$ 2,250.00
				Total Bid :	$ 34,569.60		Total Bid :	$ 43,929.00

***NOTICE: Bid award is contingent upon vendor meeting minimum specifications and formal authorization by City**

CERTIFIED: P. Vice — P. VICE, PURCHASING MANAGER
Carolyn Ruf — WITNESS
6-26-14 — DATE

CITY OF Fayetteville ARKANSAS

City of Fayetteville, Arkansas
Purchasing Division – Room 306
113 W. Mountain
Fayetteville, AR 72701
Phone: 479.575.8220
TDD (Telecommunication Device for the Deaf): 479.521.1316

INVITATION TO BID

INVITATION TO BID: Bid 14-35, Retaining Wall Blocks – Materials Only
DEADLINE: Thursday, June 26, 2014 before 3:00 PM, Local Time
DELIVERY LOCATION: Room 306 – 113 W. Mountain, Fayetteville, AR 72701
PURCHASING AGENT: Andrea Foren, CPPO, CPPB, aforen@fayetteville-ar.gov
DATE OF ISSUE AND ADVERTISEMENT: Saturday, June 14, 2014

INVITATION TO BID
Bid 14-35, Retaining Wall Blocks – Materials Only

No late bids will be accepted. Bids shall be submitted in sealed envelopes labeled with the name and address of the bidder.

All bids shall be submitted in accordance with the attached City of Fayetteville specifications and bid documents attached hereto. Each bidder is required to fill in every blank and shall supply all information requested; failure to do so may be used as basis of rejection.

The undersigned hereby offers to furnish & deliver the articles or services as specified, at the prices & terms stated herein, and in strict accordance with the specifications and general conditions of bidding, all of which are made a part of this offer. This offer is not subject to withdrawal unless upon mutual written agreement by the Proposer/Bidder and City Purchasing Manager.

Name of Firm: Industrial Precast Inc.

Contact Person: Max Blake Title: Sales Manager

E-Mail: MaxBlake@cox.net Phone: 479. 420. 1676

Business Address: 7201 So 28th

City: Fort Smith State: AR Zip: 72908

Signature: Max Blake Date: 6-25-2014

City of Fayetteville, Arkansas

Bid 14-35, Retaining Wall Blocks

Bid #	Date Issued:	Date and Time Of Bid Opening:
14-35	Saturday June 14, 2014	3:00 PM, Thursday June 26, 2014

Date Required: As specified

F.O.B	Purchasing Agent Contact Information:
Fayetteville, Arkansas	Andrea Foren, CPPO, CPPB, (479) 575-8220, aforen@ci.fayetteville.ar.us

Redi-Rock® 28" Series Wall System or Equal

Item	DESCRIPTION	QTY		PRICE EACH		EXTENDED PRICE
1	Top Block - 28" Series with Cobble Stone Face	100	x	81.85	=	$ 8185.00
2	Half Top Block - 28" Series with Cobble Stone Face	8	x	55.60	=	$ 444.80
3	Middle Block - 28" Series with Cobble Stone Face	174	x	91.00	=	$ 15834.00
4	Half Middle Block - 28" Series with Cobble Stone Face	2	x	58.60	=	$ 117.20
5	Bottom Block - 28" series with Cobble Stone Face	90	x	93.75	=	$ 8437.50
6	Half Bottom Block - 28" Series with Cobble Stone Face	1	x	58.60	=	$ 58.60
7	Bottom Block - 41" Series with Cobble Stone Face	15	x	99.50	=	$ 1492.50
					Total Bid :	$ 34569.60

Bid pricing shall be inclusive of materials, shipping, and any applicable delivery charges. The City shall be responsible for all offloading. Bid pricing shall NOT include taxes. All bidders shall refer to bid document for full details regarding delivery.

NAME OF VENDOR

Industrial Precast Inc.

THIS BID FORM CONTINUES ON THE NEXT PAGE. . .

Bids shall be submitted on this bid form *in its entirety* AND *accompanied by descriptive literature* on the products being bid. The City reserves the right to award this bid based on the City's best interest at the time of product order.

EXECUTION OF BID -

Actual specification of any deficient item shall be noted on the bid sheet or separate attachment. If specifications of item bid differ from provided literature, deviation shall be documented and certified by the manufacturer as a regular production option.

Upon signing this Bid, the bidder certifies that:

1. He/she has read and agrees to the requirements set forth in this proposal, including specifications, terms, standard conditions, and any pertinent information regarding the articles being bid on.

2. Unless otherwise noted and explained, the unit bid and listed meets or exceeds all of these requirements as specified by The City of Fayetteville.

3. The Bidder can and will comply with all specifications and requirements for delivery, documentation and support as specified herein.

4. I, as an officer of this organization, or per the attached letter of authorization, am duly authorized to certify the information provided herein is accurate and true.

5. Bidder shall comply with all State and Federal Equal Opportunity and Non-Discrimination requirements and conditions of employment in addition to all federal, state, and local laws.

6. Bidder shall disclose any possible conflict of interest with the City of Fayetteville, including, but not limited to, any relationship with any City of Fayetteville employee. Response shall disclose if a known relationship exists between any principal or employee of your firm and any City of Fayetteville employee or elected City of Fayetteville official. If no relationship exists, this should also be stated in your response. Failure to disclose such a relationship may result in cancellation of a purchase and/or contract as a result of your response.

   MB 1.) NO KNOWN RELATIONSHIP EXISTS

   _____ 2.) RELATIONSHIP EXISTS (Please explain): _____

7. Bidder will perform the Work in compliance with all applicable trench safety standards set forth in Occupational Safety and Health Administration (OSHA) Part 1926 – Subpart P – Excavations.

8. As A bidder on this project, you are required to provide debarment/suspension certification indicating that you are in compliance with the below Federal Executive Order. Certification can be done by completing and signing this form.

   a. Federal Executive Order (E.O.) 12549 "Debarment and Suspension" requires that all contractors receiving individual awards, using federal funds, and all sub-recipients certify that the organization and its principals are not debarred, suspended, proposed for debarment, declared ineligible, or voluntarily excluded by any Federal department or agency from doing business with the Federal Government.

   b. Your signature below certifies that neither you nor your principal is presently debarred, suspended, proposed for debarment, declared ineligible, or voluntarily excluded from participation in this transaction by any federal department or agency.

Unsigned bids will be rejected. Items marked * are mandatory for consideration.

*NAME OF FIRM: Industrial Precast INC.

Purchase Order/Payments shall be issued to this name

*D/B/A or Corporation Name _____

*BUSINESS ADDRESS: 7201 South 28th

*CITY: Fort Smith *STATE: Arkansas *ZIP: 72908

*PHONE: 479.646.7222 FAX: 479.484.1657

*E-MAIL: maxblake@cox.net

*BY: (PRINTED NAME) Max Blake

*AUTHORIZED SIGNATURE: Max Blake

*TITLE: Sales Manager

DUNS NUMBER: _____ CAGE NUMBER: _____

*TAX ID NUMBER: 26-0516905

Acknowledge Addendums:

Addendum No. _____ Dated: _____ Acknowledged by: _____

Addendum No. _____ Dated: _____ Acknowledged by: _____

Addendum No. _____ Dated: _____ Acknowledged by: _____

Addendum No. _____ Dated: _____ Acknowledged by: _____

City of Fayetteville
Bid 14-35, Retaining Wall Blocks – Materials Only
General Terms and Conditions

1. **SUBMISSION OF BID & BID EVALUATION:**

   a. Bids shall be reviewed following the stated deadline, as shown on the cover sheet of this document.

   b. Bidders shall submit bids based on documentation published by the Fayetteville Purchasing Division.

   c. Bids shall be enclosed in sealed envelopes or packages addressed to the City of Fayetteville, Purchasing Division, Room 306, 113 W. Mountain, Fayetteville, AR 72701. The name, address of the firm and Bid, RFP, or RFQ number shall be on the outside of the packaging as well as on any packages enclosed in shipping containers or boxes.

   d. The City will not be responsible for misdirected bids. Vendor should call the Purchasing Office at 479.575.8220 to ensure correct receipt of bidding documents prior to opening time and date listed on the bid form.

   e. Bidders must have experience in providing products and/or services of the same or similar nature.

   f. Bidder is advised that exceptions to any of the terms contained in this bid must be identified in its response to the bid. Failure to do so may lead the City to declare any such term non-negotiable. Proposer's desire to take exception to a non-negotiable term will not disqualify it from consideration for award.

   g. Local time is defined as the time in Fayetteville, Arkansas on the due date of the deadline. Bids shall be received before the time as shown by the atomic clock located in the Purchasing Division Office.

   h. Bids will be evaluated and awarded based on the best interest of the City of Fayetteville. The City reserves the right to award bids in their entirety, none, or by line item.

2. **WRITTEN REQUESTS FOR INTERPRETATIONS OR CLARIFICATION:**

No oral interpretations will be made to any firms as to the meaning of specifications or any other contract documents. All questions pertaining to the terms and conditions or scope of work of this bid must be sent in writing via e-mail to the Purchasing Agent. Responses to questions may be handled as an addendum if the response would provide clarification to the requirements of the bid. All such addenda shall become part of the contract documents. The City will not be responsible for any other explanation or interpretation of the proposed bid made or given prior to the award of the contract.

3. **DESCRIPTION OF SUPPLIES AND SERVICES:**

Any reference to a particular brand or manufacturer is done in an effort to establish an acceptable level of quality for this project. Brands or manufacturers that are included in bid that are of at least equal quality, size, design, and specification as to what has been specified, will be acceptable for consideration only if approved by the City of Fayetteville Purchasing Division. The City of Fayetteville reserves the right to accept or reject any requested equal.

4. **RIGHTS OF CITY OF FAYETTEVILLE BID PROCESS:**

In addition to all other rights of the City of Fayetteville, under state law, the City specifically reserves the following:

a. The City of Fayetteville reserves the right to select the bid that it believes will serve the best interest of the City.
b. The City of Fayetteville reserves the right to accept or reject any or all bids.
c. The City of Fayetteville reserves the right to cancel the entire bid.
d. The City of Fayetteville reserves the right to remedy or waive technical or immaterial errors in the invitation to bid or in bids submitted.
e. The City of Fayetteville reserves the right to request any necessary clarifications, additional information, or data without changing the terms of the bid.

5. **COSTS INCURRED BY BIDDERS:**

All expenses involved with the preparation and submission of bids to the City, or any work performed in connection therewith, shall be borne solely by the bidder(s). No payment will be made for any responses received, or for any other effort required of, or made by, the bidder(s) prior to contract commencement.

6. **CONFLICT OF INTEREST:**

a. The bidder represents that it presently has no interest and shall acquire no interest, either direct or indirect, which would conflict in any manner with the performance or services required hereunder, as provided in City of Fayetteville Code Section 34.26 titled "Authority of City Employee to Contract With The City".

b. All bidders shall promptly notify Andrea Foren, City Purchasing Agent, in writing, of all potential conflicts of interest for any prospective business association, interest, or other circumstance which may influence or appear to influence the bidder's judgment or quality of services being provided. Such written notification shall identify the prospective business association, interest or circumstance, the nature of which the bidder may undertake and request an opinion to the City as to whether the association, interest or circumstance would, in the opinion of the City, constitute a conflict of interest if entered into by the bidder. The City agrees to communicate with the bidder its opinion via e-mail or first-class mail within thirty days of receipt of notification.

7. **WITHDRAWL OF PROPOSAL:**

A bid may be withdrawn prior to the time set for the bid submittal, based on a written request from an authorized representative of the firm; however, a bid shall not be withdrawn after the time set for the bid unless approved by the Purchasing Division.

8. **LATE PROPOSAL OR MODIFICATIONS:**

Bid modifications received after the time set for the bid submittal shall not be considered. Modifications in writing received prior to the deadline will be accepted. The City will not be responsible for misdirected bids. Bidders should call the Purchasing Division at (479) 575-8220 to insure receipt of their submittal documents prior to opening time and date listed.

9. **LOCAL, STATE, AND FEDERAL COMPLIANCE REQUIREMENTS:**

a. The laws of the State of Arkansas apply to any purchase made under this bid. Bidders shall comply with all local, state, and federal directives, orders and laws as applicable to this proposal and subsequent

contract(s) including but not limited to Equal Employment Opportunity (EEO), Disadvantaged Business Enterprises (DBE), & OSHA as applicable to this contract.

b. Pursuant to Arkansas Code Annotated §22-9-203 The City of Fayetteville encourages all *qualified* small, minority and women business enterprises to bid on and receive contracts for goods, services, and construction. Also, City of Fayetteville encourages all general contractors to subcontract portions of their contract to *qualified* small, minority and women business enterprises.

10. **PROVISION FOR OTHER AGENCIES:**

Unless otherwise stipulated by the bidder, the bidder agrees to make available to all Government agencies, departments, municipalities, and counties, the proposal prices submitted in accordance with said proposal terms and conditions therein, should any said governmental entity desire to buy under this proposal. Eligible Users shall mean all state of Arkansas agencies, the legislative and judicial branches, political subdivisions (counties, local district school boards, community colleges, municipalities, counties, or other public agencies or authorities), which may desire to purchase under the terms and conditions of the contract.

11. **COLLUSION:**

The Proposer, by affixing his or her signature to this proposal, agrees to the following: "bidder certifies that his or her bid is made without previous understanding, agreement, or connection with any person, firm or corporation making a proposal for the same item(s) and/or services and is in all respects fair, without outside control, collusion, fraud, or otherwise illegal action."

12. **RIGHT TO AUDIT, FOIA, AND JURISDICITON:**

a. The City of Fayetteville reserves the privilege of auditing a vendor's records as such records relate to purchases between the City and said vendor.

b. Freedom of Information Act: City contracts and documents prepared while performing City contractual work are subject to the Arkansas Freedom of Information Act. If a Freedom of Information Act request is presented to the City of Fayetteville, the (Contractor) will do everything possible to provide the documents in a prompt and timely manner as prescribed in the Arkansas Freedom of Information Act (A.C.A. §25-19-101 et. seq.). Only legally authorized photocopying costs pursuant to the FOIA may be assessed for this compliance.

c. Legal jurisdiction to resolve any disputes shall be in Washington County, Arkansas with Arkansas law applying to the case.

13. **CITY INDEMNIFICATION:**

The successful bidder(s) agrees to indemnify the City and hold it harmless from and against all claims, liability, loss, damage or expense, including but not limited to counsel fees, arising from or by reason of any actual or claimed trademark, patent or copyright infringement or litigation based thereon, with respect to the goods or any part thereof covered by this order, and such obligation shall survive acceptance of the goods and payment thereof by the City.

14. **VARIANCE FROM STANDARD TERMS & CONDITIONS:**

All standard terms and conditions stated in this request for bid apply to this contract except as specifically stated in the subsequent sections of this document, which take precedence, and should be fully understood by bidders prior to

submitting a proposal on this requirement.

15. **ADA REQUIREMENT FOR PUBLIC NOTICES & TRANSLATION:**

Persons with disabilities requiring reasonable accommodation to participate in this proceeding/event, should call 479.521.1316 (telecommunications device for the deaf), not later than seven days prior to the deadline. Persons needing translation of this document shall contact the City of Fayetteville, Purchasing Division, immediately.

16. **PROCUREMENT POLICY FOR RECYCLED MATERIALS:**

The City of Fayetteville wishes to encourage its bidders to use recycled products in fulfilling contractual obligations to the City and that such practices will serve as a model for other public entities and private sector companies.

17. **PAYMENTS AND INVOICING:**

The bidder must specify in their bid the exact company name and address which must be the same as invoices submitted for payment as a result of award of this bid. Further, the successful bidder is responsible for immediately notifying the Purchasing Division of any company name change, which would cause invoicing to change from the name used at the time of the original bid. Payment will be made within thirty days of invoice received. The City of Fayetteville is very credit worthy and will not pay any interest, fees, or penalty for untimely payments. **Payments can be processed through bidder's acceptance of Visa at no additional costs to the City for expedited payment processing.** The City will not agree to any nonrefundable deposit or retainer that would remain property of the bidder even if the hourly work actually performed by the bidder would not justify such fee.

The City will pay the awarded bidder based on unit prices provided on invoicing. Progress payments will be made after approval and acceptance of work and submission of invoice. Payments will be made within 30 days of accepted invoice.

18. **CANCELLATION:**

a. The City reserves the right to cancel this contract without cause by giving thirty (30) days prior notice to the Contractor in writing of the intention to cancel or with cause if at any time the Contractor fails to fulfill or abide by any of the terms or conditions specified.

b. Failure of the contractor to comply with any of the provisions of the contract shall be considered a material breach of contract and shall be cause for immediate termination of the contract at the discretion of the City of Fayetteville.

c. In addition to all other legal remedies available to the City of Fayetteville, the City reserves the right to cancel and obtain from another source, any items and/or services which have not been delivered within the period of time from the date of order as determined by the City of Fayetteville.

d. In the event sufficient budgeted funds are not available for a new fiscal period, the City shall notify the vendor of such occurrence and contract shall terminate of the last day of the current fiscal period without penalty or expense to the City

19. **ASSIGNMENT, SUBCONTRACTING, CORPORATE ACQUISITIONS AND/OR MERGERS:**

a. The Contractor shall perform this contract. No assignment of subcontracting shall be allowed without prior written consent of the City. If a bidder intends to subcontract a portion of this work, the bidder shall disclose such intent in the bid submitted as a result of this bid.

b. In the event of a corporate acquisition and/or merger, the Contractor shall provide written notice to the City within thirty (30) calendar days of Contractor's notice of such action or upon the occurrence of said action, whichever occurs first. The right to terminate this contract, which shall not be unreasonably exercised by the City, shall include, but not be limited to, instances in which a corporate acquisition and/or merger represent a conflict of interest or are contrary to any local, state, or federal laws. Action by the City awarding a proposal to a firm that has disclosed its intent to assign or subcontract in its response to the bid, without exception shall constitute approval for purpose of this Agreement.

20. **NON-EXCLUSIVE CONTRACT:**

Award of this bid shall impose no obligation on the City to utilize the vendor for all work of this type, which may develop during the contract period. This is not an exclusive contract. The City specifically reserves the right to concurrently contract with other companies for similar work if it deems such an action to be in the City's best interest. In the case of multiple-term contracts, this provision shall apply separately to each item.

21. **LOBBYING:**

Lobbying of selection committee members, City of Fayetteville employees, or elected officials regarding request for proposals, request for qualifications, bids or contracts, during the pendency of bid protest, by the bidder/proposer/protestor or any member of the bidder's/proposer's/protestor's staff, and agent of the bidder/proposer/protestor, or any person employed by any legal entity affiliated with or representing an organization that is responding to the request for proposal, request for qualification, bid or contract, or has a pending bid protest is strictly prohibited either upon advertisement or on a date established by the City of Fayetteville and shall be prohibited until either an award is final or the protest is finally resolved by the City of Fayetteville; provided, however, nothing herein shall prohibit a prospective/bidder/proposer from contacting the Purchasing Division to address situations such as clarification and/or questions related to the procurement process. For purposes of this provision lobbying activities shall include but not be limited to, influencing or attempting to influence action or non-action in connection with any request for proposal, request for qualification, bid or contract through direct or indirect oral or written communication or an attempt to obtain goodwill of persons and/or entities specified in this provision. Such actions may cause any request for proposal, request for qualification, bid or contract to be rejected.

22. **ADDITIONAL REQUIREMENTS:**

The City reserves the right to request additional services relating to this bid from the bidder. When approved by the City as an amendment to the contract and authorized in writing prior to work, the Contractor shall provide such additional requirements as may become necessary.

23. **ADD OR DELETE LOCATIONS OR SERVICES:**

The City reserves the right to unilaterally add or delete locations and/or services, either collectively or individually, at the City's sole option, at any time after award has been made as may be deemed necessary or in the best interests of the City. In such case, the Contractor(s) will be required to provide services to this contract in accordance with the terms, conditions, and specifications.

24. **INTEGRITY OF BID DOCUMENTS:**

Bidders shall use the original bid form(s) provided by the Purchasing Division and enter information only in the spaces where a response is requested. Bidders may use an attachment as an addendum to the bid form(s) if sufficient space is not available on the original form for the bidder to enter a complete response. **Any modifications or alterations to the**

original documents by the bidder, whether intentional or otherwise, will constitute grounds for rejection of such response. Any such modifications or alterations a bidder wishes to propose shall be clearly stated in the bidder's response and presented in the form of an addendum to the original bid documents.

25. **OTHER GENERAL CONDITIONS:**

a) Bidder is presumed to be familiar with all federal, state, and city laws, ordinances, and regulations which in any manner affect those engaged or employed in the Work, or the materials or equipment used, or that in any way affect the Work and shall in all respects comply with said laws, ordinances, and regulations. No claim of misunderstanding or ignorance on the part of Bidder or Proposer will in any way serve to modify the provisions of the contract. No representations shall be binding unless embodied in the contract.

b) Prices shall include all labor, materials, overhead, profit, insurance, shipping, freight, etc., to cover the products and services presented. ***Sales tax shall not be included in the bid price.*** Applicable Arkansas sales tax laws will apply when necessary but will not be considered in award of this project.

c) Each bidder should state the anticipated number of days from the date of receipt of an order for delivery of services to the City of Fayetteville.

d) Bidders must provide the City with their bids signed by an employee having legal authority to submit bids on behalf of the bidder. The entire cost of preparing and providing responses shall be borne by the bidder.

e) The City reserves the right to request any additional information it deems necessary from any or all bidders after the submission deadline.

f) The request for bid is not to be construed as an offer, a contract, or a commitment of any kind; nor does it commit the city to pay for any costs incurred by bidder in preparation. It shall be clearly understood that any costs incurred by the Proposer in responding to this request for proposal is at the bidder's own risk and expense as a cost of doing business. The City of Fayetteville shall not be liable for reimbursement to the Proposer for any expense so incurred, regardless of whether or not the proposal is accepted.

g) If products, components, or services other than those described in this bid document are proposed, the bidder must include complete descriptive literature for each. All requests for additional information must be received within five working days following the request.

h) NOTE: Any uncertainties shall be brought to the attention to Andrea Foren immediately via telephone (479.575.8220) or e-mail (aforen@fayetteville-ar.gov). It is the intent and goal of the City of Fayetteville Purchasing Division to provide documents providing a clear and accurate understanding of the scope of work to be completed and/or goods to be provided. We encourage all interested parties to ask questions to enable all bidders to be on equal bidding terms.

i) Any inquiries or requests for explanation in regard to the City's requirements should be made promptly to Andrea Foren, City of Fayetteville, Purchasing Agent via e-mail (aforen@fayetteville-ar.gov) or telephone (479.575.8220). No oral interpretation or clarifications will be given as to the meaning of any part of this request for proposal. All questions, clarifications, and requests, together with answers, if any, will be provided to all firms via written addendum. Names of firms submitting any questions, clarifications, or requests will not be disclosed until after a contract is in place.

j) Any information provided herein is intended to assist the bidder in the preparation of proposals necessary to properly respond to this bid. The bid is designed to provide qualified Proposers with sufficient basic information

to submit proposals meeting minimum specifications and/or test requirements, but is not intended to limit a bid's content or to exclude any relevant or essential data.

k) Bidders irrevocably consent that any legal action or proceeding against it under, arising out of or in any manner relating to this Contract shall be prevailed by Arkansas law. Proposer hereby expressly and irrevocably waives any claim or defense in any said action or proceeding based on any alleged lack of jurisdiction or improper venue or any similar basis.

l) The successful bidder shall not assign the whole or any part of this Contract or any monies due or to become due hereunder without written consent of City of Fayetteville. In case the successful bidder assigns all or any part of any monies due or to become due under this Contract, the Instrument of assignment shall contain a clause substantially to the effect that is agreed that the right of the assignee in and to any monies due or to become due to the successful bidder shall be subject to prior liens of all persons, firms, and corporations for services rendered or materials supplied for the performance of the services called for in this contract.

m) The successful bidder's attention is directed to the fact that all applicable Federal and State laws, municipal ordinances, and the rules and regulations of all authorities having jurisdiction over the services shall apply to the contract throughout, and they will be deemed to be included in the contract as though written out in full herein. The successful bidder shall keep himself/herself fully informed of all laws, ordinances and regulations of the Federal, State, and municipal governments or authorities in any manner affecting those engaged or employed in providing these services or in any way affecting the conduct of the services and of all orders and decrees of bodies or tribunals having any jurisdiction or authority over same. If any discrepancy or inconsistency should be discovered in these Contract Documents or in the specifications herein referred to, in relation to any such law, ordinance, regulation, order or decree, s/he shall herewith report the same in writing to City of Fayetteville.

City of Fayetteville
Bid 14-35, Retaining Wall Blocks – Materials Only
Technical Specification: Wall Units shall be Redi-Rock® 28" Series Wall System or Equal

1. **GENERAL –**

   a. Bid prices shall **exclude** applicable taxes; however, sales tax will apply to all orders in accordance with local, state, and federal law. Pricing shall be inclusive of materials, shipping, fuel, etc.

   b. All materials shall be shipped to a single job site in Fayetteville, Arkansas. Vendor shall coordinate with City of Fayetteville in regards to final destination ship point within the City limits of Fayetteville, AR.

   c. The City of Fayetteville reserves the right to award bids all or none. The City of Fayetteville also reserves the right to deviate from estimated purchase quantities.

   d. The City of Fayetteville intends to purchase all blocks shown on the bid form for a single job, placed in a single order, and delivered as coordinated and scheduled with the City Transportation Division. Delivery for materials shall occur in the following manner:

      i. Not all materials will be delivered on the same day; however, all interested parties shall understand these materials are for the intended use of a single project and deliveries may occur over a 14 calendar day time period.

      ii. Delivery schedule for all items shall be coordinated with the City of Fayetteville Transportation Division within five (5) calendar days of order being placed, unless longer time is needed by the City.

      iii. Deliveries shall be made in full semi-truck loads, with the exception of the final delivery.

      iv. First shipment shall arrive for delivery within ten (10) calendar days of order being placed, followed by additional subsequent truck deliveries as scheduled with the City. The City anticipates 1-2 full truck loads per day over a consecutive fourteen (14) calendar day time period.

      v. The City reserves the right to purchase additional quantities as needed through 12/31/2014. Bidders shall hold pricing firm through 12/31/14.

      vi. The City of Fayetteville shall be responsible for offloading materials at the job site.

2. **MATERIALS –**

   a. Wall units shall be Redi-Rock® as produced by a licensed manufacturer or equal.

   b. Wall units shall be made with ready-mixed concrete in accordance with ASTM C94, latest revision, and per the following chart: **Higher slumps are allowed if achieved by use of*

appropriate admixtures.

CLIMATE	AIR CONTENT	28 Day Compressive Strength, PSI	SLUMP*
Negligible	1 ½% -4 ½%	3,000	5" +/- 1 ½"
Moderate	3% - 6%	3,000	5" +/- 1 ½"
Severe	4 ½% - 7 ½%	3,000	5" +/- 1 ½"

c. Notwithstanding anything stated above, all materials used in the wall units must meet applicable ASTM and local requirements for exterior concrete.

d. Exterior block dimensions shall be uniform and consistent. Maximum dimensional deviations shall be 1%, excluding the architectural surface. Maximum width (face to back) deviation including the architectural surface shall be 1.0 inch.

e. Exposed face shall be Cobble Stone finish. Other surfaces to be smooth form type. Dime-size bug holes on the block face may be patched and/or shake-on color stain can be used to blend into the remainder of block face.

3. TECHNICAL SPECIFICATIONS

41" Series Blocks

Top - 28"
Volume = 8.55 cft
Weight = ±1223 lbs
C of G = 15.06"

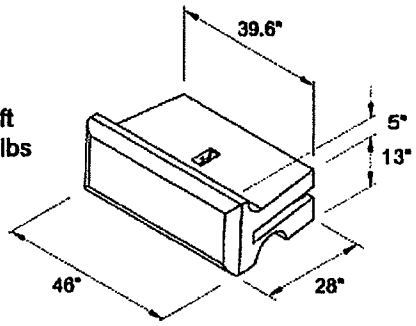

Half Top - 28"
Volume = 4.13 cft
Weight = ±591 lbs

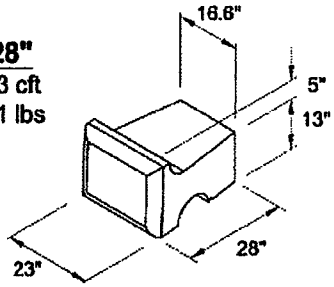

Middle - 41"
Volume = 16.44 cft
Weight = ±2351 lbs
C of G = 20.92"

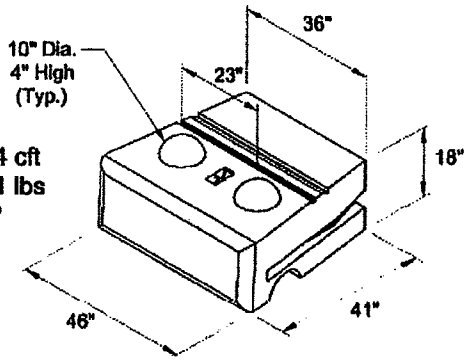

Half Middle - 41"
Volume = 7.28 cft
Weight = ±1041 lbs

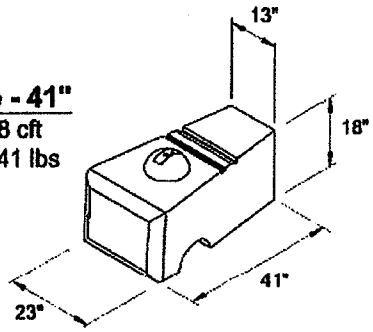

Bottom - 41"
Volume = 17.37 cft
Weight = ±2483 lbs
C of G = 21.3"

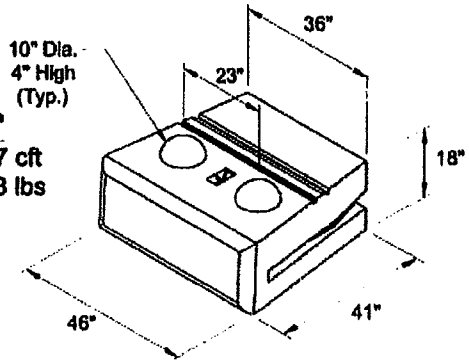

Half Bottom - 41"
Volume = 7.73 cft
Weight = ±1105 lbs

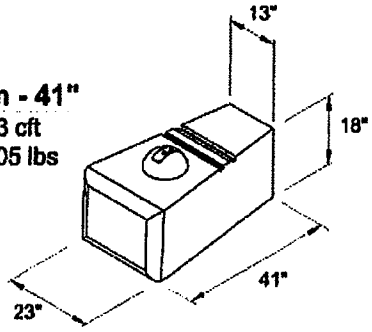

Planter
Volume = 14.12 cft
Weight = ±2020 lbs
C of G = 19.35"

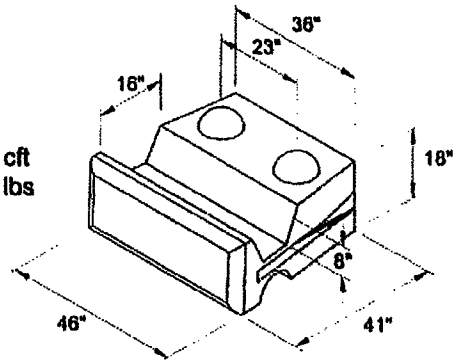

Half Planter
Volume = 5.91 cft
Weight = ±890 lbs

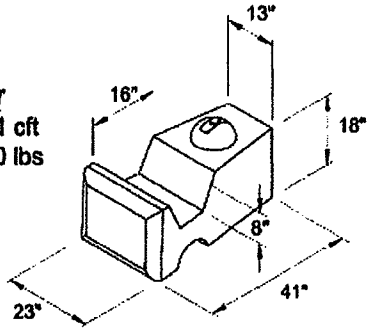

28" Series Blocks

Top - 28"
Volume = 8.55 cft
Weight = ±1223 lbs
C of G = 15.06"

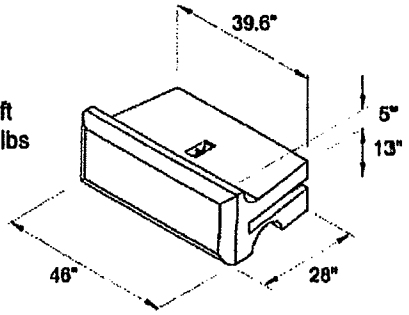

Half Top - 28"
Volume = 4.13 cft
Weight = ±591 lbs

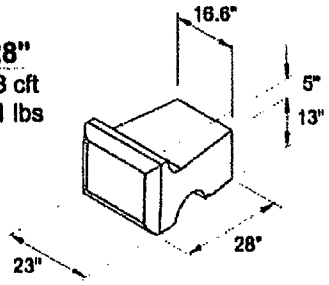

Middle - 28"
Volume = 11.40 cft
Weight = ±1630 lbs
C of G = 14.18"

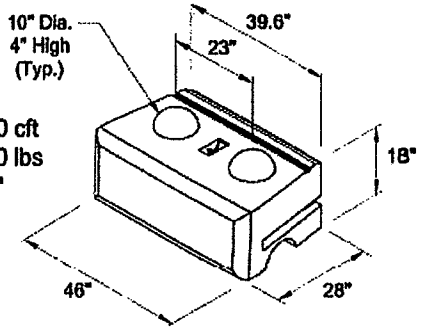

Half Middle - 28"
Volume = 5.34 cft
Weight = ±764 lbs

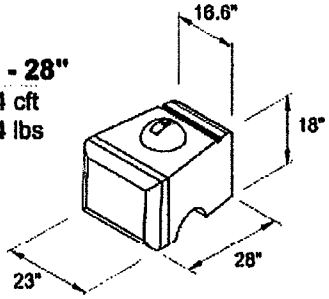

Bottom - 28"
Volume = 12.36 cft
Weight = ±1768 lbs
C of G = 14.23"

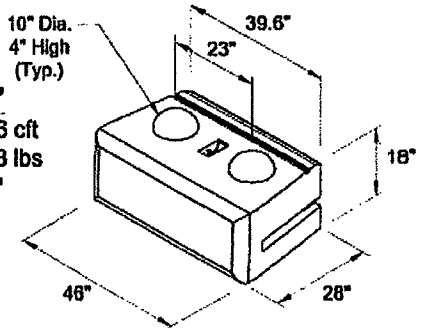

Half Bottom - 28"
Volume = 5.79 cft
Weight = ±827 lbs

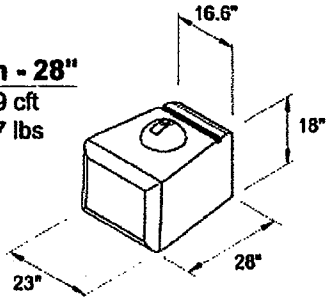

23" End Block
Volume = 6.79 cft
Weight = ± 970 lbs
C of G = 12.29"

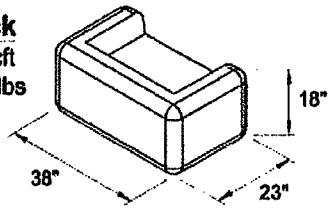

City of Fayetteville Staff Review Form

2014-0290

Legistar File ID

7/15/2014

City Council Meeting Date - Agenda Item Only
N/A for Non-Agenda Item

Terry Gulley	6/27/2014	Transportation Services / Transportation Services Department
Submitted By	**Submitted Date**	**Division / Department**

Action Recommendation:

A resolution awarding Bid 14-37 to and authorizing the purchase of cold asphalt concrete from Carter Waters for a unit price of $116.82 per ton, as needed, and authorizing the use of other bidders based on price and availability.

Budget Impact:

2100.4120.5215.00	Street
Account Number	Fund
Project Number	Project Title

Budgeted Item?	Yes	Current Budget	$	68,729.00
		Funds Obligated	$	55,064.69
		Current Balance	$	**13,664.31**
Does item have a cost?	Yes	Item Cost	$	-
Budget Adjustment Attached?	No	Budget Adjustment	$	-
		Remaining Budget	$	**13,664.31**

V20140610

Previous Ordinance or Resolution # _____

ENTERED 6/27/14 AM

Original Contract Number: _____

Approval Date: _____

Comments: The "item cost" box has been left blank because the exact item cost will vary depending upon the Transportation Division's fluctuating needs based on citizen service requests received, construction project progress, and other variable factors.

BP - 6-30-14
Paul A. Becker 6-30-2014
Don Allen 7-1-14

CITY OF Fayetteville ARKANSAS

CITY COUNCIL AGENDA MEMO

MEETING OF JULY 15, 2014

TO: Mayor and City Council

THRU: Don Marr, Chief of Staff

FROM: Terry Gulley, Transportation Services Director

DATE: June 26, 2014

SUBJECT: **Bid 14-37, Cold Asphalt Concrete**

RECOMMENDATION:
A resolution awarding Bid 14-37 to and authorizing the purchase of cold asphalt concrete from Carter Waters for a unit price of $116.82 per ton, as needed, and authorizing the use of other bidders based on price and availability.

BACKGROUND:
The purchase of bulk construction materials and services is necessary to maintain current infrastructure and to implement projects outlined in the 2013-2017 Capital Improvements Program and annual budget and work program. Sealed bids in accordance with State statutes, City ordinances, and purchasing procedures were publicly read and the results are attached to this memo.

DISCUSSION:
The low bid for cold asphalt concrete was submitted by Carter Waters. The City has purchased cold asphalt concrete from this vendor in the past. Their product meets all necessary specifications and their service is satisfactory.

BUDGET/STAFF IMPACT:
Funds for the acquisition of these materials have been budgeted in Street Fund. Cold asphalt concrete will be purchased on an "as needed" basis with payment remitted via procurement card.

Attachments:
Bid 14-37 Tabulation
Bid Submittal
Product Information

RESOLUTION NO. _____

A RESOLUTION TO AWARD BID #14-37 AND AUTHORIZE THE PURCHASE OF COLD ASPHALT CONCRETE FROM CARTER WATERS FOR A UNIT PRICE OF $116.82 PER TON, AS NEEDED, AND TO AUTHORIZE THE USE OF OTHER BIDDERS BASED ON PRICE AND AVAILABILITY AS NEEDED THROUGH THE END OF CALENDAR YEAR 2014

BE IT RESOLVED BY THE CITY COUNCIL OF THE CITY OF FAYETTEVILLE, ARKANSAS:

Section 1. That the City Council of the City of Fayetteville, Arkansas hereby awards Bid #14-37 and authorizes the purchase of cold asphalt concrete from Carter Waters for a unit price of $116.82 per ton and further authorizes the use of other bidders based on price and availability as needed through the end of calendar year 2014.

PASSED and **APPROVED** this 15th day of July, 2014.

APPROVED:

By: _____
LIONELD JORDAN, Mayor

ATTEST:

By: _____
SONDRA E. SMITH, City Clerk/Treasurer

Fayetteville
ARKANSAS

Bid: 14-37
DATE: 06/26/14
3:00 PM
CITY OF FAYETTEVILLE

Bid 14-37, Cold Asphalt Concrete

			Atlas Asphalt		*Carter Waters*	
Item	**DESCRIPTION**	**Estimated Tons**	**Price Per Ton**	**Total**	**Price Per Ton**	**Total**
1	Cold Asphalt Concrete - Clean screened limestone (max 3/8"), washed sharp river sand, cutback asphalt, reinforcing fibers and CW-1 anti-strip agent	400	$135.00	$54,000.00	$116.82	$46,728.00
	TOTAL BASE BID=			**$54,000.00**		**$46,728.00**

***NOTICE: Bid award is contingent upon vendor meeting minimum**

CERTIFIED: P Vice — **P. Vice, Purchasing Manager.** Carolyn Ruf — **WITNESS** 6-26-14 — **DATE:**

CITY OF Fayetteville ARKANSAS

City of Fayetteville, Arkansas
Purchasing Division – Room 306
113 W. Mountain St.
Fayetteville, AR 72701
Phone: 479.575.8220
TDD (Telecommunication Device for the Deaf): 479.521.1316

INVITATION TO BID

INVITATION TO BID: Bid 14-37, Cold Asphalt Concrete
DEADLINE: Thursday, June 26, 2014 before 3:00 PM, Local Time
DELIVERY LOCATION: Room 306 – 113 W. Mountain, Fayetteville, AR 72701
PURCHASING AGENT: Andrea Foren, CPPO, CPPB, aforen@fayetteville-ar.gov
DATE OF ISSUE AND ADVERTISEMENT: Saturday, June 14, 2013

INVITATION TO BID
Bid 14-37, Cold Asphalt Concrete

No late bids will be accepted. Bids shall be submitted in sealed envelopes labeled with the name and address of the bidder.

All bids shall be submitted in accordance with the attached City of Fayetteville specifications and bid documents attached hereto. Each bidder is required to fill in every blank and shall supply all information requested; failure to do so may be used as basis of rejection.

The undersigned hereby offers to furnish & deliver the articles or services as specified, at the prices & terms stated herein, and in strict accordance with the specifications and general conditions of bidding, all of which are made a part of this offer. This offer is not subject to withdrawal unless upon mutual written agreement by the Proposer/Bidder and City Purchasing Manager.

Name of Firm: Carter-Waters

Contact Person: Coby Hess Title: Sales Representative

E-Mail: chess@carter-waters.com Phone: 816-872-3301

Business Address: 2440 West Pennway

City: Kansas City State: MO. Zip: 64141

Signature: [illegible] Date: 06/24/14

City of Fayetteville
Bid 14-37, Cold Asphalt Concrete
Bid Form

DATE REQUIRED AS A COMPLETE UNIT: Delivery shall be made within 7 calendar days from date ordered by the City.

ITEM	DESCRIPTION	QUANTITY	PRICE PER TON	TOTAL PRICE
1	Cold Asphalt Concrete – Clean screened limestone (max 3/8"), washed sharp river sand, cutback asphalt, reinforcing fibers and CW-1 anti-strip agent	400 Tons	$116.82	$46,728.00

Please specify for unit(s) bid:

MANUFACTURER: Carter-Waters

Bids shall be submitted on this bid form *in its entirety* AND *accompanied by descriptive literature* on the products being bid. The City intends on awarding this bid to a single vendor.

THIS BID FORM CONTINUES ON THE NEXT PAGE.

EXECUTION OF BID -

Actual specification of any deficient item shall be noted on the bid sheet or separate attachment. If specifications of item bid differ from provided literature, deviation shall be documented and certified by the manufacturer as a regular production option.

Upon signing this Bid, the bidder certifies that:

1. He/she has read and agrees to the requirements set forth in this proposal, including specifications, terms, standard conditions, and any pertinent information regarding the articles being bid on.

2. Unless otherwise noted and explained, the unit bid and listed meets or exceeds all of these requirements as specified by The City of Fayetteville.

3. The Bidder can and will comply with all specifications and requirements for delivery, documentation and support as specified herein.

4. I, as an officer of this organization, or per the attached letter of authorization, am duly authorized to certify the information provided herein is accurate and true.

5. Bidder shall comply with all State and Federal Equal Opportunity and Non-Discrimination requirements and conditions of employment in addition to all federal, state, and local laws.

6. Bidder shall disclose any possible conflict of interest with the City of Fayetteville, including, but not limited to, any relationship with any City of Fayetteville employee. Response shall disclose if a known relationship exists between any principal or employee of your firm and any City of Fayetteville employee or elected City of Fayetteville official. If no relationship exists, this should also be stated in your response. Failure to disclose such a relationship may result in cancellation of a purchase and/or contract as a result of your response.

   __X__ 1.) NO KNOWN RELATIONSHIP EXISTS

   _____ 2.) RELATIONSHIP EXISTS (Please explain): _____

7. Bidder will perform the Work in compliance with all applicable trench safety standards set forth in Occupational Safety and Health Administration (OSHA) Part 1926 – Subpart P – Excavations.

8. As A bidder on this project, you are required to provide debarment/suspension certification indicating that you are in compliance with the below Federal Executive Order. Certification can be done by completing and signing this form.

   a. Federal Executive Order (E.O.) 12549 "Debarment and Suspension" requires that all contractors receiving individual awards, using federal funds, and all sub-recipients certify that the organization and its principals are not debarred, suspended, proposed for debarment, declared ineligible, or voluntarily excluded by any Federal department or agency from doing business with the Federal Government.

   b. Your signature below certifies that neither you nor your principal is presently debarred, suspended, proposed for debarment, declared ineligible, or voluntarily excluded from participation in this transaction by any federal department or agency.

Unsigned bids will be rejected. Items marked * are mandatory for consideration.

*NAME OF FIRM: Carter-Waters

Purchase Order/Payments shall be issued to this name

*D/B/A or Corporation Name _____

*BUSINESS ADDRESS: 2440 West Pennway

*CITY: Kansas City *STATE: MO *ZIP: 64141

*PHONE: 816-872-3301 FAX: 816-221-9562

*E-MAIL: Chess@Carter-Waters.com

*BY: (PRINTED NAME) Coby Hess

*AUTHORIZED SIGNATURE: CH GH

*TITLE: Sales Representative

*DUNS NUMBER: 00-714-8604 CAGE NUMBER: _____

*TAX ID NUMBER: 26-3789544

Acknowledge Addendums:

Addendum No. _____ Dated: _____ Acknowledged by: _____

Addendum No. _____ Dated: _____ Acknowledged by: _____

Addendum No. _____ Dated: _____ Acknowledged by: _____

SATUROCK® PLUS

COLD ASPHALT CONCRETE

* Open All Year *

CARTER WATERS
CONSTRUCTION MATERIALS

Product Name
Saturock® Plus

Manufacturer
The Carter-Waters Corporation
P.O. Box 412676
Kansas City, MO 64141
(816) 471-2570
Saturock Plant (816) 455-6756
Saturock Plant 800-277-6250

Product Description
Saturock Plus is designed for use in paving / patching applications where traffic is heavy. Reinforcing fibers make Saturock Plus more cohesive than standard Saturock or other patching materials; therefore it is more durable and less prone to breakup.

Basic Uses
Primarily for heavy-duty patching or railroad grade crossings where drainage is poor and traffic is heavy.

Used By
- Cities and Municipalities
- Departments of Transportation
- Industries and Small Businesses
- Railroads

Specification:
The cutback asphalt used in the production of Carter-Waters' Saturock Plus meets or exceeds ASTM or AASHTO specifications.

Packaging:
In addition to bulk shipments;
55 gallon drums and 5 gallon pails (special order)

Technical Data
Saturock Plus is manufactured with clean-screened limestone (max 3/8"), washed sharp river sand, cutback asphalt, reinforcing fibers and CW-1 anti-strip agent. This combination makes a uniform, dense aggregate mix of high mechanical stability.

Yield:
A ton of Saturock will cover approximately 20 square yards 1" thick after compaction. Saturock will compact 1/3 upon rolling.

Technical Services
Complete technical information and literature is available from Carter-Waters. Any technical advice furnished by the company or any representative of the company concerning any use of application of Saturock Plus is believed to be reliable, but the company makes no warranty, express or implied, of any use of application for which such advice is furnished.

SATUROCK is a trademark of the Carter-Waters Corporation.

CARTER WATERS
CONSTRUCTION MATERIALS

CARTER-WATERS CORP.
2440 West Pennway
P.O. Box 412676
Kansas City, MO 64141
816-471-2570 or 800-444-2570
816-221-9562 fax • www.carter-waters.com

SATUROCK®

COLD ASPHALTIC CONCRETE

* Open All Year *

CARTER WATERS
CONSTRUCTION MATERIALS

Product Name

Saturock* - a cold asphalt concrete

Manufacturer

The Carter-Waters Corporation
P.O. Box 412676
Kansas City, MO 64141
(816) 471-2570
Saturock Plant (816) 455-6756
Saturock Plant 800-277-6250

Product Description

An economical, easy-to-use paving and patching cold asphalt mix, Saturock is a carefully engineered product designed to be used year round, regardless of weather conditions. There are three types of Saturock to choose from depending on the type of application

Basic Uses:

Type "F" Saturock

Use for surfacing, resurfacing and patching of streets, roads, runways, parking lots, driveways, alleys, sidewalks, station platforms and other hard surface areas.
Limitations: Type F is not be applied over 1-1/4" thick after compaction.

Type "F"-600

Suitable for residential driveways, parking lots, school yards and recreational areas. . . wherever traffic is light.
Limitations: Type F-600 is not to be applied over 1-1/4" thick after compaction.

Type II

Primarily for heavy-duty patching and railroad grade crossings where drainage is poor and traffic is heavy.
Limitations: Type II has no depth limitation on application, as long as the specifications for compacted lifts are met.

Used by:

- Cities & Municipalities
- Departments of Transportation
- Industries & Small Businesses
- Railroads
- Homeowners

Specifications:

The cutback asphalt used in the production of Saturock meets or exceeds ASTM or AASHTO specifications.

Packaging:

In addition to bulk shipments,
60 lb. bags 55 gallon drums (special order)
60 lb. pails (special order)

Technical Data

Saturock is produced with clean-screened limestone, washed sharp river sand, cutback asphalt, and CW-1 anti-strip agent. This combination makes a uniform, dense aggregate mix of high mechanical stability.

Gradation:

Type "F"
Maximum aggregate size . . . . . .3/8"
River sand 15%
Asphalt content 4%-6%

Type "F-600"
Maximum aggregate size . . . . . .3/8"
River sand 30%
Asphalt content 4-1/2%-6-1/2%

Type II
Maximum aggregate size . . . . . .1/2"
River sand 10%
Asphalt content 3%-5%

Yield:

A ton of Saturock will cover approximately 20 square yards 1" thick after compaction. Saturock will compact 1/3 upon rolling.

Technical Services

Complete technical information and literature are available from Carter-Waters. Any technical advice furnished by the company or any representative of the company concerning any use or application of Saturock is believed to be reliable, but the company makes no warranty, express or implied, of any use or application for which such advice is furnished.

•Saturock is a trademark of the Carter-Waters Corporation.

CARTER WATERS
CONSTRUCTION MATERIALS

CARTER-WATERS CORP.
2440 West Pennway
P.O. Box 412676
Kansas City, MO 64141
816-471-2570 or 800-444-2570
816-221-9562 fax • www.carter-waters.com

How To Use Saturock Cold Asphaltic Concrete

Application

The success of a Saturock installation is substantially dependent upon its proper application. A proper base is absolutely necessary or the surface can fail. Base failures occur from deficiencies in drainage, compaction, depth and/or mechanical stability.

Existing bases of Portland cement concrete, asphaltic concrete, brick or well compacted stone or gravel can be successfully surfaced with Saturock if the base is stable and of sufficient depth to carry expected traffic. Irregularities in an existing base should be brought to grade with compacted, crushed stone or in Type II applications, by Saturock itself. (See Diagrams.)

Clean, crushed stone (1 1/2" max.) is an excellent material for new base construction. A new base should be well compacted and constructed to a depth sufficient to evenly distribute the anticipated load on the sub-grade.

Clean the surface of an existing gravel base by brooming to remove all loose and foreign material. Usually, priming is unnecessary. If the base is extremely dry and brooming loosens the aggregate, a *thin* prime coat may be applied and allowed to dry thoroughly.

On existing hard surfaced areas such as Portland cement, asphalt concrete or brick, a light tack coat (1/10 to 1/20 gal./sq. yd.) may be desirable. *If there is a question as to the desirability of priming or tacking, our personnel are available for recommendations on specific applications.*

Saturock should not be dumped on the base to be paved. Dump along the base, then shovel to final position. Raking should be done only to level the mix.

Compaction may be obtained with a three to five ton roller used in accord with standard practices. Avoid excessive rolling. Compaction by tamping (hand or power) is satisfactory for patching holes or surfacing small areas.

DIAGRAMS

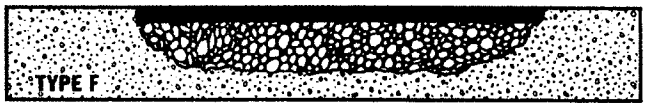

Where the hole exceeds 1-1/4" in depth, fill with crushed rock to within 1-1/4" of the surface, apply Type F Saturock and tamp or roll thoroughly.

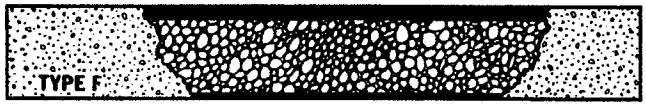

In deep holes, Type F Saturock binder course at the bottom of the hole, as illustrated, is recommended. Hole is then filled with crushed rock and topped with 1-1/4" of Saturock.

Type II can be used for heavy-duty patching. Fill the full depth with compaction in 3" lifts, as illustrated.

Resurfacing with Type F Saturock wearing course of 1-1/4" depth or with Type II Saturock – no limitation on the wearing course depth as long as compaction is in 3" lifts.

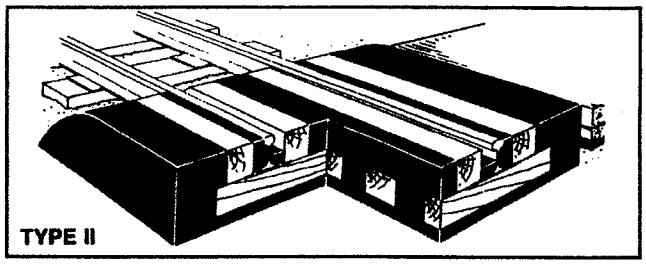

Type II Saturock grade crossing, designed for use where drainage is poor and traffic is heavy. There is no depth limitation. When surfacing or raising track, Type II Saturock is compacted a few inches below the bottom of the tie as shown. Otherwise, start at the bottom of the tie and come up in four compacted lifts. Rail timbers, as shown, are optional.

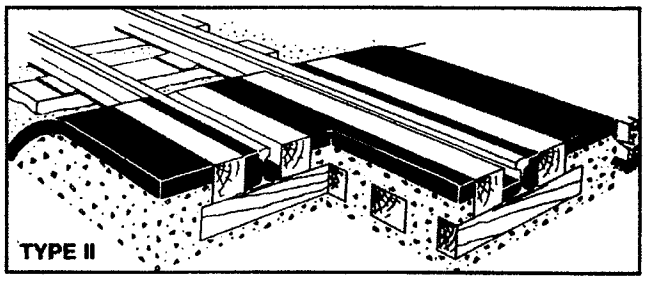

Only the 1-3/4" Saturock surface course is used where rail and/or vehicular traffic is light to moderate and high mechanical stability can be attained in the base. This crossing is fast, inexpensive and durable.

CARTER WATERS
CONSTRUCTION MATERIALS

DISCLAIMER OF WARRANTY: Since the methods and conditions of application and use are beyond our control, manufacturer hereby expressly disclaims any warranty of MERCHANTABILITY or FITNESS FOR A PARTICULAR PURPOSE. Further, the manufacturer expressly limits its liability to the purchase price hereof and expressly disclaims all liability for any actual, incidental or consequential damages that may occur. The preceding disclaimer of warranties and limitation of remedies do not apply to products which are the subject of consumer transactions in jurisdictions where such disclaimers or limitations are prohibited by law.

City of Fayetteville Item Review Form

2014-0291

Legistar File Number

July 15, 2014

City Council Meeting Date - Agenda Item Only

N/A for Non-Agenda Item

Deputy Chief Mike Reynolds

Submitted By

Police Department

Department

Action Required:

Council adopt a resolution approving the purchase of thirty-five (35) mobile computer systems from Future Link of Illinois Inc. per bid #14-32.

Does this item have a cost? Yes

$150,500.00	$160,000.00	Police Patrol Vehicle Electronic Upgrades
Cost of this request	Category or Project Budget	Program or Project Name
4470-9470-5210.00	$91.25	Minor Equipment
Account Number	Funds Used to Date	Program or Project Category
13012-1	$9,408.75	Capital Improvements
Project Number	Remaining Balance	Fund Name

Budgeted Item? Yes **Budget Adjustment Attached?** No

V20130812

Previous Ordinance or Resolution # _____

Original Contract Number: _____

ENTERED 6/26/14

ENTERED 6/30/14

Comments:
Bid #14-32 Mobile Data Terminals

6/30/14

Paul A. Becker 6-30-2014

6-30-14

CITY OF Fayetteville ARKANSAS

STAFF MEMO

TO: **Mayor Lioneld Jordan** Mike Reynolds

FROM: Mike Reynolds, Deputy Chief of Police

DATE: June 26, 2014

SUBJECT: **Police Department Mobile Computer Terminals**

RECOMMENDATION:

It is recommended City Council adopt a resolution approving the purchase of thirty-five (35) Datalux Tracer 5 mobile computers from Future Link of Illinois Inc. as per bid #14-32 in the amount of $150,500.00.

BACKGROUND:

The police department deployed mobile computer terminals in patrol vehicles in 1999. Our current terminals, purchased in 2008, are out of warranty, and they do not support our current operating system. This project is a scheduled replacement project.

DISCUSSION:

These computer systems interface with the New World Systems Computer Aided Dispatch, Mobile Messaging and Automatic Vehicle Location systems, as well as provide access to the Arkansas and National Crime Information Center databases. These computers are essential to run electronic ticketing, accident reconstruction and in-car word processing software. Additionally, these computers will use the same mounting hardware that is already installed in our patrol vehicles.

BUDGET/STAFF IMPACT:

This project is already funded as a Capital Improvement Project, and there will be no operating expense impact until 2019.

RESOLUTION NO. _____

A RESOLUTION TO AWARD BID #14-32 AND AUTHORIZE THE PURCHASE OF THIRTY-FIVE (35) MOBILE COMPUTER SYSTEMS FROM FUTURE LINK OF ILLINOIS, INC. IN THE AMOUNT OF $150,500.00 FOR USE IN FAYETTEVILLE POLICE PATROL VEHICLES.

BE IT RESOLVED BY THE CITY COUNCIL OF THE CITY OF FAYETTEVILLE, ARKANSAS:

Section 1. That the City Council of the City of Fayetteville, Arkansas hereby awards Bid #14-32 and authorizes the purchase of thirty-five (35) Mobile Computer Systems from Future Link of Illinois, Inc. in the amount of $150,500.00 for use in Fayetteville Police patrol vehicles.

PASSED and **APPROVED** this 15th day of July, 2014.

APPROVED: ATTEST:

By: _____ By: _____
LIONELD JORDAN, Mayor **SONDRA E. SMITH**, City Clerk/Treasurer

CITY OF Fayetteville ARKANSAS

Bid 14-32
6/17/2014
2:00 PM
City of Fayetteville

Bid 14-32, Mobile Data Terminals

BIDDER	Manufacturer	Model	Qty	Price Each	Total Bid
Future Link of Illinois Inc	Datalux Corp	Tracer T-5/ TX 205	35	$ 4,300.00	$ 150,500.00
Howard Technology Solutions	Tracer 5	TCU-T5	35	$ 4,521.00	$ 158,235.00
L-3 Common Mobile-Vision	L-3 Mobile Vision	V-One	35	$ 4,916.80	$ 172,088.00

*NOTICE: Bid award is contingent upon vendor meeting minimum specifications and formal authorization by City officials.

CERTIFIED:

P Vice — Carolyn Reif — 6-17-14

P. Vice, Purchasing Manager — Witness: — Date:

City of Fayetteville Staff Review Form

2014-0295

Legistar File ID

7/15/2014

City Council Meeting Date - Agenda Item Only
N/A for Non-Agenda Item

David Dayringer	6/27/2014	Fire / Fire Department
Submitted By	**Submitted Date**	**Division / Department**

Action Recommendation:

Approval of a budget adjustment in the amount of $8,826 to recognize 2014 Hazmat Services Revenue from Washington County received over the last few months and increase related expense budget.

Budget Impact:

1010.3040.5218.01	General Fund--Hazmat Equipment
Account Number	Fund
Project Number	Project Title

Budgeted Item?	Yes	Current Budget	$	65,297.00
		Funds Obligated	$	48,774.49
		Current Balance	$	**16,522.51**
Does item have a cost?	No	Item Cost	$	-
Budget Adjustment Attached?	Yes	Budget Adjustment	$	8,826.00
		Remaining Budget	$	**25,348.51**

V20140610

Previous Ordinance or Resolution # _____

Original Contract Number: _____

Approval Date: _____

ENTERED 6/27/14 AM

ENTERED 7/1/14 AM

Comments:

6/30/14

7-1-2014

Paul A. Becker

Don Marr 7-1-14

CITY OF Fayetteville ARKANSAS

CITY COUNCIL AGENDA MEMO

MEETING OF JULY 15, 2014

TO: Mayor and City Council

FROM: David Dayringer, Fire Chief

DATE: June 27, 2014

SUBJECT: Approval of the Fire Department utilization of hazmat services revenue from Washington County and to approve budget adjustment.

RECOMMENDATION:
Staff recommends approval of a budget adjustment in the amount of $8,826 to recognize 2014 Hazmat Services Revenue from Washington County received over the last few months and increase related expense budget.

DISCUSSION:
The City of Fayetteville has received $8,826 of Hazmat Services Revenue from Washington County. The Fire Department would like to utilize the revenue to complete the outfitting of a secondary hazmat unit and offset costs for the Fayetteville Hazmat Team. It will also be utilized to cover expenses for training and related expenses. These purchases will be vital to the efficient and effective operation of the Hazmat Response Operations of the Fire Department.

BUDGET/STAFF IMPACT:
Increase expenses to correspond with hazmat services revenue received through June, 2014

Attachments:
Budget Adjustment for Hazmat Revenue

RESOLUTION NO. _____

A RESOLUTION TO APPROVE A BUDGET ADJUSTMENT RECOGNIZING HAZMAT SERVICES REVENUE RECEIVED BY THE FIRE DEPARTMENT SINCE FEBRUARY 2014

BE IT RESOLVED BY THE CITY COUNCIL OF THE CITY OF FAYETTEVILLE, ARKANSAS:

Section 1: That the City Council of the City of Fayetteville, Arkansas hereby approves a budget adjustment, a copy of which is attached as Exhibit "A", recognizing hazmat services revenue received by the Fire Department since February 2014.

PASSED and **APPROVED** this 15th day of July, 2014.

APPROVED:

By: _____
LIONELD JORDAN, Mayor

ATTEST:

By: _____
SONDRA E. SMITH, City Clerk/Treasurer

City of Fayetteville, Arkansas - Budget Adjustment Form (Legistar)

Budget Year	Division:	Fire	Adjustment Number
2014	Dept.:	Fire	
	Requestor:	Granville Wynn/Kyle Curry	

BUDGET ADJUSTMENT DESCRIPTION / JUSTIFICATION:

This Budget Adjustment will take funding from the HazMat Revenue Account-1010.0001.4401.08 which will reflect revenue from Hazmat Services from Washington County of $8,826 and place it in 1010.3040.5218.01--HazMat Equipment to assist in the further outfitting of a secondary hazmat unit and offset costs for Fayetteville Haz-Mat Team and cover expenses for training and related expenses.

COUNCIL DATE: 7/15/2014

LEGISTAR FILE ID#: **2014-0295**

Barbara Fell 6/27/14

Budget Director Date

TYPE:

DESCRIPTION:

GLDATE:

RESOLUTION/ORDINANCE

POSTED: /

v.20140619

	Increase / (Decrease)		Project.Sub#			
Account Number	Expense	Revenue	Project	Sub	AT	Account Name
TOTAL	8,826	8,826				
1010.3040.5218.01	8,826	-			EX	HAZMAT Equipment
1010.0001.4401.08	-	8,826			RE	HAZMAT Interlocal Revenue
	-	-				
	-	-				
	-	-				
	-	-				
	-	-				
	-	-				
	-	-				
	-	-				
	-	-				
	-	-				
	-	-				
	-	-				

EXHIBIT A

City of Fayetteville Item Review Form

2014-0285

Legistar File Number

7-15-2014

City Council Meeting Date - Agenda Item Only

N/A for Non-Agenda Item

David Dayringer — **Submitted By**

Fire — **Department**

Action Required:

Council approval of a resolution to purchase apparatus from Pierce Manufacturing, Inc. of Appleton, Wisconsin through the Houston-Galveston Area Council (HGAC) Contract #800-926-0234 Member # 14-3975 in the amount of $807,259 for use by The Fayetteville Fire Department; and approving a 2% Contingency of $16,146.

Does this item have a cost? Yes

$807,259.00	$844,786.00	Fire apparatus purchases
Cost of this request	Category or Project Budget	Program or Project Name
4470.9470.5802.00	$0.00	Fire improvements
Account Number	Funds Used to Date	Program or Project Category
03019.1	$37,527.00	Sales Tax Capital
Project Number	Remaining Balance	Fund Name

Budgeted Item? Yes **Budget Adjustment Attached?** No

V20130812

ENTERED 12-25-14 AM

ENTERED 6/30/14

Previous Ordinance or Resolution # _____

Original Contract Number: _____

Comments:

The quote from Pierce Manufacturing through the HGAC Contract # 800-926-0234 is for one Pierce 75' HAL mounted for $807,259 + 2% contingency funds of $16,146 for total funds needed of $823,405. These funds are budgeted and available in the Capital Project: Fire Apparatus Purchases Project #03019.

6-27-14

Paul A. Becker 6-30-2014

7-1-14

CITY OF Fayetteville ARKANSAS

CITY COUNCIL AGENDA MEMO

MEETING OF JULY 15, 2014

TO: Mayor and City Council

FROM: David Dayringer, Fire Chief

DATE: 6-25-2014

SUBJECT: A resolution to purchase apparatus from Pierce Manufacturing, Inc. of Appleton, Wisconsin through the Houston-Galveston Area Council (HGAC) Contract #800-926-0234 Member # 14-3975 in the amount of $807,259 for use by The Fayetteville Fire Department; And approving a 2% Contingency of $16,146.

RECOMMENDATION:
Approval of a resolution to purchase apparatus from Pierce Manufacturing, Inc. of Appleton, Wisconsin through the Houston-Galveston Area Council (HGAC) Contract #800-926-0234 Member # 14-3975 in the amount of $807,259 for use by The Fayetteville Fire Department; And approving a 2% Contingency of $16,146.

BACKGROUND:
Unit #24 was a 1992 Pierce 65 foot ladder truck that was worn out and was auctioned off last February on GovDeals. The Fire Department's internal equipment committee has spent almost a year in researching available units in order to get the best buy for the City. They visited manufacturing plants of several different companies as part of the process. They have chosen a unit from Pierce Manufacturing. The truck the Fire Department Equipment Committee has proposed to buy was approved by the Council Equipment Committee at their meeting of June 24th, 2014.

DISCUSSION:
The unit proposed for purchase is a "Quint" which means the Fire Department will have five functions available on this apparatus: pump, water, fire hose, aerial device, and ground ladders. NFPA (National Fire Protection Association) standards spell out the necessary equipment required and the performance specifications for a certified fire apparatus. By adhering to these standards, the Fire Department is assured of getting the necessary required equipment.

BUDGET/STAFF IMPACT:
The quote from Pierce Manufacturing through the HGAC Contract # 800-926-0234 is for one Pierce 75' HAL mounted for $807,259 + 2% contingency funds of $16,146 for total funds needed of $823,405. These funds are budgeted and available in the Capital Project: Fire Apparatus Purchases Project #03019.

Attachments:
Pierce Manufacturing Apparatus Quote

RESOLUTION NO. _____

A RESOLUTION TO APPROVE A BID FROM PIERCE MANUFACTURING, INC. PURSUANT TO THE HOUSTON-GALVESTON AREA COUNCIL CONTRACT #800-926-0234 FOR A PIERCE 75 FOOT HEAVY DUTY ALUMINUM LADDER FIRE TRUCK IN THE AMOUNT OF $807,259.00 PLUS A CONTINGENCY OF $16,146.00

WHEREAS, the Fire Department needs to replace the 1992 Pierce 65 foot ladder truck that was auctioned off in February; and

WHEREAS, the Fire Department researched several available fire trucks and visited several different manufacturers to try to get the best fire truck and the best price; and

WHEREAS, the Fire Department recommends the Pierce 75 foot Heavy Duty Aluminum Ladder Fire Truck that was approved by the City Council Equipment Committee on June 24, 2014.

NOW, THEREFORE BE IT RESOLVED BY THE CITY COUNCIL OF THE CITY OF FAYETTEVILLE, ARKANSAS:

Section 1: That the City Council of the City of Fayetteville, Arkansas hereby approves a bid from Pierce Manufacturing, Inc. pursuant to the Houston-Galveston Area Council Contract #800-926-0234 for a Pierce 75 foot Heavy Duty Aluminum Ladder Fire Truck in the amount of $807,259.00 plus a contingency of $16,146.00 and authorizes Mayor Jordan to sign any contract or other document to exercise and pay for this approved bid.

PASSED and **APPROVED** this 15th day of July, 2014.

APPROVED: ATTEST:

By: _____
LIONELD JORDAN, Mayor

By: _____
SONDRA E. SMITH, City Clerk/Treasurer

Fayetteville Fire Department

June 17, 2014

The undersigned is prepared to deliver, upon an order being placed by you, for final acceptance by Pierce Manufacturing, Inc., at its home office in Appleton, Wisconsin, the apparatus and equipment herein named and for the following prices:

One (1) Pierce75' HAL mounted on an Arrow XT Chassis per our proposal for a total price of:

$ 807,259.00 to include all equipment in attached Proposal

Said apparatus is to be built and shipped in accordance with the specifications hereto attached, delays due to strikes, war or international conflict, failures to obtain chassis, materials, or other causes beyond our control not preventing, within about 240-270 calendar days or less after receipt of this order and the acceptance thereof at our Appleton, Wisconsin office, and to be delivered to you at the Fayetteville Fire Department.

The specifications herein contained shall form a part of the final contract, and are subject to changes desired by the purchaser, provided such alterations are interlined prior to the acceptance by the company of the order to purchase, and provide such alterations do not materially affect the cost of the construction of the apparatus.

The proposal for fire apparatus conforms to all Federal Department of Transportation (DOT) rules and regulations in effect at the time of the bid and with all National Fire Protection Association (NFPA) Guidelines for Automotive Fire Apparatus as published at the time of bid, except as modified by customer specifications. Any increased costs incurred by first party because of future changes in or additions to said DOT or NFPA standards will be passed along to the customers as an addition to the price set forth above.

Respectfully,

Steve Haile
Sales Representative
Pierce Manufacturing, Inc.

City of Fayetteville - Purchase Order Request (PO)

(Not a Purchase Order)

All PO Requests shall be scanned to the Purchasing e-mail: Purchasing@fayetteville-ar.gov.
Purchase shall not be made until an actual PO has been issued.

Requisition No.:

Date: 6/27/2014

P.O Number:

Vendor #: 19470

Vendor Name: Pierce Manufacturing

Mail ☐ Yes ☐ No

Legistar#: 2014-0285

Address: P.O. Box 2017 2600 American Dr.

FOB Point:

Taxable ☐ Yes ☐ No

Expected Delivery Date:

City: Appleton

State: Wisconsin

Zip Code: 54913

Ship to code:

Quotes Attached ☐ Yes ☐ No

Requester: Granville Wynn

Requester's Employee #: 3806

Extension: 7613

Item	Description	Quantity	Unit of Issue	Unit Cost	Extended Cost	Account Number	Project.Sub#	Inventory #	Fixed Asset #
1	**Pierce 75' HAL mounted Fire Quint Apparatus**	**1**			**$807,259.00**	**4470.9470.5802.00**	**03019/1**		
2									
3									
4									
5									
6									
7									
8									
9									
10									
*	Shipping/Handling		Lot						

Special Instructions:
Purchasing apparatus from Pierce Manufacturing, Inc. of Appleton, Wisconsin through the **Houston-Galveston Area Council (HGAC) Contract #800-926-0234 Member # 14-3975** in the amount of $807,259 for use by The Fayetteville Fire Department.

Subtotal: **$807,259.00**
Tax:
Total: **$807,259.00**

Approvals:

Mayor: _____

Department Director: _____

Purchasing Manager: _____

Chief Financial Officer: _____

Budget Director: _____

IT Director: _____

Dispatch Manager: _____

Utilities Manager: _____

Other: _____

Revised 6/18/2014

City of Fayetteville Staff Review Form

2014-0279

Legistar File ID

7/15/2014

City Council Meeting Date - Agenda Item Only
N/A for Non-Agenda Item

Don Marr	6/23/2014	Chief of Staff
Submitted By	**Submitted Date**	**Division / Department**

Action Recommendation:

A request to approve a resolution amendement between the City of Fayetteville and Plante & Moran for IT Program & Management Contract services previously approved by the Fayetteville City Council (Resolution 2014-012) and approve a budget adjustment for the cost of the amended request.

Budget Impact:

4470.9470.5315.00	4470 - Sales Tax Capital Improvements
Account Number	Fund
14001.1	Project Management Services (IT)
Project Number	Project Title

Budgeted Item?	Yes	Current Budget	$	150,000.00
		Funds Obligated	$	101,400.00
		Current Balance	**$**	**48,600.00**
Does item have a cost?	Yes	Item Cost	$	106,470.00
Budget Adjustment Attached?	Yes	Budget Adjustment	$	57,870.00
		Remaining Budget	**$**	-

V20140610

Previous Ordinance or Resolution # 2014-012

Original Contract Number:

Approval Date:

Comments:

7/1/14

ENTERED 7/1/14

ENTERED 7/1/14

David A. Brackett 7-2-2014

Don Marr 7-2-14

CITY OF Fayetteville ARKANSAS

CITY COUNCIL AGENDA MEMO

MEETING OF JULY 15TH, 2014

TO: Mayor and City Council

THRU: Mayor Jordan

FROM: Don Marr, Chief of Staff

DATE: June 27, 2014

SUBJECT: **Plante Moran Contract Amendment & Budget Adjustment**

RECOMMENDATION:
The request is for the City to amend a previously approved agreement with Plante & Moran to provide project management and IT department management services to the City of Fayetteville. As was previously discussed during the original contract approval, the IT Director has been out with a significant health issue and thus created a gap in day to day management needs for the IT Division. We have several significant IT initiatives taking place and it is imperative that we have contract division management services to share the work load through the end of 2014. If at that time regular full time staff is unable to return, the City will then fill the position permanently with a regular hire rather than contracting with an outside agency.

BACKGROUND:
The City of Fayetteville entered into an agreement with Plante Moran for services ½ time through 2014. We have used the contract to supplement day to day management of the IT Division with an on-site manager every other week since the beginning of the year with the exception of weekly services through the Capital Planning Process in May. The City still have significant IT projects moving forward, most importantly the ERP System Selection and Implementation, as well as regular daily IT management needs. It is anticipated that a final decision will be made as to the return possibility & date of our IT Director by year end. And we would like to extend this contract through December 31st 2014 to cover the management needs until the final disposition of this situation has been determined.

Additionally, there remains several key projects that still exist on the IT Project Portfolio that need to be significantly completed prior to the ERP project starting in earnest. Some examples of some of these key projects and services that are still needed are: The Content Management System project will soon be kicking off and will need to be managed, as well as the continued development of processes and procedures for the City's IT department. Additionally, there are critical projects such as the Database Cluster Replacement, Disaster Recovery Plan re-development, ERP readiness, GIS Database upgrade, and continued development of metrics and procedures within the department.

BUDGET/STAFF IMPACT:

The contract amendment will utilize approximately $48,600 of unused funds within the IT division and a budget adjustment for the balance of the contract amount needed – which will be used through use of reserves for a total cost of $106,470.

The contract rates remains at the "all inclusive" (travel, housing, payroll, etc.) rate as originally quoted and selected by the City of Fayetteville Selection Committee and previously approved by the City Council January 7th, 2013.

Attachments:
Current Plante & Moran Contract Amendment for July 2014 through December 2014.

Resolution 16-14 approved by the City Council, previous staff memo, contract, Plante & Moran original proposal

RESOLUTION NO. _____

A RESOLUTION TO APPROVE AN EXTENSION TO THE CONTRACT WITH PLANTE AND MORAN, PLLC FOR INFORMATION TECHNOLOGY SERVICES THROUGH THE END OF 2014 IN THE AMOUNT OF $106,470.00, AND TO APPROVE A BUDGET ADJUSTMENT

BE IT RESOLVED BY THE CITY COUNCIL OF THE CITY OF FAYETTEVILLE, ARKANSAS:

Section 1: That the City Council of the City of Fayetteville, Arkansas hereby approves an extension of the City's contract with Plante and Moran, PLLC for information technology services through the end of 2014 in the amount of $106,470.00 and authorizes Mayor Jordan to sign all documents necessary to effectuate that agreement.

Section 2. That the City Council of the City of Fayetteville, Arkansas hereby approves a budget adjustment, a copy of which is attached as Exhibit "A".

PASSED and **APPROVED** this 15th day of July, 2014.

APPROVED:

By: _____
LIONELD JORDAN, Mayor

ATTEST:

By: _____
SONDRA E. SMITH, City Clerk/Treasurer

City of Fayetteville, Arkansas - Budget Adjustment Form (Legistar)

Budget Year	Division:	Chief of Staff	Adjustment Number
2014	Dept.:	Chief of Staff	
	Requestor:	Don Marr	

BUDGET ADJUSTMENT DESCRIPTION / JUSTIFICATION:

$57,870 to cover a request to approve a resolution amendement between the City of Fayetteville and Plante & Moran for IT Program & Management Contract services. There is suffcient reserves available to meet this request.

COUNCIL DATE: 7/15/2014

LEGISTAR FILE ID#: **2014-0279**

Kevin Springer
6/23/2014 3:11 PM

Budget Director Date

TYPE:

DESCRIPTION:

GLDATE:

POSTED: /

RESOLUTION/ORDINANCE

v.20140619

	Increase / (Decrease)		Project.Sub#			
Account Number	Expense	Revenue	Project	Sub	AT	Account Name
TOTAL	57,870	57,870				
4470.9470.5315.00	57,870	-	14001	1	EX	Contract Services
4470.0947.4999.99	-	57,870			RE	Use of Fund Balance
	-	-				
	-	-				
	-	-				
	-	-				
	-	-				
	-	-				
	-	-				
	-	-				
	-	-				
	-	-				
	-	-				
	-	-				
	-	-				

EXHIBIT
A

Fayetteville Hours Additional Hours Expansion Proposal

June 10, 2014

Background: In 2013, Plante Moran responded to an RFP to conduct IT Project and Departmental IT Management work on site for a period of approximately 6 months. The original intent of the proposal was to cover approximately 520 hours.

Work at the City began the week of January 20th, 2014 and has evolved into being on site nearly every other week , with some weeks being every week for the months of February through June of 2014 with limited amounts of work being performed on the off weeks. During that time the on-site resource, Dale Vanderford, has begun to implement a project management methodology and has started to evolve the IT department into a culture of service and professionalism. It is during this on site time, that the department sees the most momentum, so it is the wish of Fayetteville City management that the hours be increased for a period of time in order to prolong the oversight in the department.

Proposal: During the months of July through December, 2014 additional oversight of the department, as well as further development of business processes and policies/procedures are necessary due to the effort required to establish these items in a limited time frame in the contractual time allotted. An increase in scheduled hours is needed because the bank of 520 hours will be exhausted by the end of June, 2014

Below is current and proposed schedule of hours to illustrate the difference in the scheduling.

Week	Proposed Hours	
23-Jun	42	est
7-Jul	42	est
28-Jul	42	est
11-Aug	42	est
25-Aug	42	est
8-Sep	42	est
22-Sep	42	est
6-Oct	42	est
20-Oct	42	est

3-Nov	42	est
17-Nov	42	est

1-Dec	42	est
15-Dec	42	est

Cumulative Hours	546	est
Estimated Additional Budget Required	$ 106,470	

Our fees for providing assistance to the City of Fayetteville will not exceed $104, 470, comprised of 184 additional hours @$195.00 per hour for all of the staff time spent on services related to IT Project Management engagement, inclusive of any expenses incurred.

Fees associated with any potential changes to our scope of services and/or other optional assistance as deemed necessary by the City, or future phases to be determined, can be provided at your request at a later date and will not be billed until formally approved, separately, by the City of Fayetteville.

We appreciate the opportunity to be of continued service to the City. If you agree with the terms of this engagement as described in this letter, please sign the enclosed copy and return it to us via fax to 248.603.5516. If you have any questions regarding this proposal, please do not hesitate to contact Dale Vanderford or Adam Rujan at 800.544.0203.

RESOLUTION NO. 16-14

A RESOLUTION TO APPROVE A CONTRACT WITH PLANTE AND MORAN, PLLC FOR INFORMATION TECHNOLOGY SERVICES IN THE AMOUNT OF $101,400.00

BE IT RESOLVED BY THE CITY COUNCIL OF THE CITY OF FAYETTEVILLE, ARKANSAS:

Section 1: That the City Council of the City of Fayetteville, Arkansas hereby approves the attached Contract with Plante and Moran, PLLC for information technology services in the amount of $101,400.00 and authorizes Mayor Jordan to sign this contract.

PASSED and **APPROVED** this 7th day of January 2014.

APPROVED:

By: _____
LIONELD JORDAN, Mayor

ATTEST:

By: _____
SONDRA E. SMITH, City Clerk/Treasurer

CITY CLERK / TREASURER
CITY OF
FAYETTEVILLE
ARKANSAS
WASHINGTON COUNTY

City of Fayetteville Item Review Form

2013-0242

Legistar File Number

1/7/2014

City Council Meeting Date - Agenda Item Only

N/A for Non-Agenda Item

Paul Becker

Submitted By

Finance

Department

Action Required:

Approval of an information technology project and management services contract with Plante & Moran, PLLC.

Does this item have a cost?

$101,400.00	$150,000.00	
Cost of this request	Category or Project Budget	Program or Project Name
4470.9470.5315.00		
Account Number	Funds Used to Date	Program or Project Category
14001-1	$48,600.00	
Project Number	Remaining Balance	Fund Name

Budgeted Item? Yes

Budget Adjustment Attached?

V20130812

ENTERED 12/19/13

12-10-13 FC 22 RCVD

Previous Ordinance or Resolution #

Original Contract Number:

Comments:

12-19-13

Paul A. Becker 12-19-2013

12-19-13

12/20/13

Fayetteville ARKANSAS
www.accessfayetteville.org

THE CITY OF FAYETTEVILLE, ARKANSAS
DEPARTMENT CORRESPONDENCE

NON-AGENDA ITEM MEMO

To: Mayor Jordan

Thru: Don Marr, Chief of Staff

From: Paul A Becker

Date: December 18, 2013

Subject: Information Technology Project Implementation & Management Services Contract

PROPOSAL:

This request is for the City to enter into an agreement with Plante & Moran to provide Project Management Services to the City. During the 2014 Budget discussions this project was discussed with the Council. As was discussed during the budget, the IT staff has been very short staffed this year and those staffing issues will continue into 2014.In addition the division is in the process of a major project that changes the City's e-mail platform from Novell GroupWise to Microsoft Outlook. The project also includes the implementation of Microsoft 365 and upgrading of Microsoft Office to the latest version. In addition to that project, a telecommunication project which changed the communication carrier from AT & T to Cox Communications was implemented but work on that project remains. We also have other projects planned in the future such as a new ERP system.
This project will support the IT division in the implementation of projects and provide management advise on future projects.

RECOMMENDATION:

Staff recommends that the proposed contract with Plante & Moran,PLC to provide Project Implementation & Management Services be approved.

BUDGET IMPACT

Funds for this project was approved in the 2014 budget. The cost of this request is $101,400 of the total budget approved which was $150,000.

RESOLUTION NO. _____

A RESOLUTION TO APPROVE A CONTRACT WITH PLANTE AND MORAN, PLLC FOR INFORMATION TECHNOLOGY SERVICES IN THE AMOUNT OF $101,400.00

BE IT RESOLVED BY THE CITY COUNCIL OF THE CITY OF FAYETTEVILLE, ARKANSAS:

Section 1: That the City Council of the City of Fayetteville, Arkansas hereby approves the attached Contract with Plante and Moran, PLLC for information technology services in the amount of $101,400.00 and authorizes Mayor Jordan to sign this contract.

PASSED and **APPROVED** this 7th day of January 2014.

APPROVED: ATTEST:

By: _____ By: _____
LIONELD JORDAN, Mayor **SONDRA E. SMITH**, City Clerk/Treasurer

Fayetteville ARKANSAS
www.accessfayetteville.org

THE CITY OF FAYETTEVILLE, ARKANSAS

CONTRACT

Reference Bid: RFP 13-16, Information Technology Project Implementation & Management Services
Contractor: Plante & Moran, PLLC
Term: 1 year

This contract executed this 7th day of January, ~~2013~~ 2014, between the City of Fayetteville, Arkansas, and ***Plante & Moran, PLLC***. In consideration of the mutual covenants contained herein, the parties agree as follows.

WITNESSETH:

WHEREAS, City has previously determined that it has a need for Information Technology Project Implementation & Management Services

WHEREAS, City, after soliciting competitive proposals for such services pursuant to City of Fayetteville RFP 13-16 (herein after referred to as Request for Proposal or RFP), City has awarded this contract to ***Plante & Moran, PLLC***; and

WHEREAS, ***Plante & Moran, PLLC*** has represented that it is able to satisfactorily provide these services according to the terms and conditions of the RFP, which are incorporated herein by reference, and the terms and conditions are contained herein; and

NOW THEREFORE, in consideration of the above and mutual covenants contained herein, the parties agree as follows:

1. IT Support Services , as requested and more specifically outlined in the RFP, this agreement, and all subsequent official documents that form the Contract Documents for this Agreement.

2. Time of Service: Services shall be performed in a timely manner, as specified in the RFP and attached in Appendix A.

3. Term of Agreement: Services performed pursuant to this Contract shall commence upon execution of this agreement and continue until project is complete, unless canceled or terminated within thirty (30) days written notice by either party.

4. Amendment of Contract: This Contract may be amended only by mutual agreement of the parties.

5. Assignment and Subcontracting: ***Plante & Moran, PLLC*** shall perform this contract. No assignment or subcontracting shall be allowed without the prior written consent of the City. In the event of a corporate acquisition and/or merger, ***Plante & Moran, PLLC*** shall provide written notice to the City within thirty (30) business days of such notice of action or upon the occurrence of said action, whichever occurs first. The right to terminate this contract, which shall not be unreasonably exercised by the City, shall include, but not be limited to, instances in which a corporate acquisition and/or merger represent a conflict of interest or are contrary to any local, state, or federal laws. Action by the City awarding a proposal to a Proposer, which has disclosed its intent to assign or subcontract in its response to the RFP, without exception shall constitute approval for purposes of this Agreement.

6. Cancellation: The City of Fayetteville reserves the right to cancel this Contract, without cause, by giving thirty (30) days notice to ***Plante & Moran, PLLC*** of the intent to cancel, or with cause if at any time ***Plante & Moran, PLLC*** fails to fulfill or abide by any of the terms or conditions specified.

Failure of the ***Plante & Moran, PLLC*** to comply with any of the provisions of this contract shall be considered a material breach of contract and shall be cause for immediate termination of the contract at the discretion of the City of Fayetteville.

In addition to all other legal remedies available to the City of Fayetteville, the City reserves the right to cancel and obtain from another source any services which have not been provided within the period of time stated in the proposal, or if no such time is stated, within a reasonable period of time from the date of order or request, as determined by the City.

In the event that sufficient budgeted funds are not available for a fiscal period, the City shall notify ***Plante & Moran, PLLC*** of such occurrence and the Contract shall terminate on the last day of the then current fiscal period without penalty or expense to the City. The City reserves the right to terminate within the thirty (30) day notice because of budgetary issues.

7. Compensation: As compensation for ***Plante & Moran, PLLC*** providing services to the City as described herein, the City shall pay ***Plante & Moran, PLLC*** in arrears, based on the submission of invoices for work completed and properly authorized. City shall pay ***Plante & Moran, PLLC*** in an amount not to exceed $101,400.00, based on a blended consulting rate of $195 per hour, inclusive of all travel expenses, at an estimated 520 hours. In the event services are provided which do not require travel, the rate shall be less than $195 per hour as negotiated.

8. Permits & Licenses: ***Plante & Moran, PLLC*** shall secure and maintain any and all permits and licenses required to complete this contract.

9. Minimum Insurance Requirements: ***Plante & Moran, PLLC*** shall maintain insurance in at least the amounts required in the RFP throughout the term of this contract. ***Plante & Moran, PLLC*** must provide a Certificate of Insurance in accordance with the insurance requirements listed within the RFP, evidencing such coverage prior to issuance of a purchase order or commencement of any work under this contract. ***Plante & Moran, PLLC*** shall ensure that any subcontractors or persons hired by subcontractors maintain the same level of insurance coverage as ***Plante & Moran, PLLC.***

10. Indemnification: ***Plante & Moran, PLLC*** shall indemnify, pay the cost of defense, including but not limited to attorneys' fees, and hold harmless the City from all suits, actions or claims of any character brought on account of any injuries or damages received or sustained by any person, persons, or property by or from the said ***Plante & Moran, PLLC***; or by, or in consequence of any neglect in safeguarding the work; or on account of any act or omission, neglect or misconduct of ***Plante & Moran, PLLC***; or by, or on account of, any claim or amounts recovered under the Workers' Compensation Law or of any other laws, by-laws, ordinances, order of decree, except only such injury or damage as shall have been occasioned by the sole negligence of the City of Fayetteville. The first ten dollars ($10.00) of compensation received by ***Plante & Moran, PLLC*** represents specific consideration for this indemnification obligation.

11. Governing Law & Jurisdiction: Legal jurisdiction to resolve any disputes shall be Washington County, Arkansas with Arkansas law applying to the case.

12. Severability: The terms and conditions of this agreement shall be deemed to be severable. Consequently, if any clause, term, or condition hereof shall be held to be illegal or void, such determination shall not affect the validity of legality of the remaining terms and conditions, and notwithstanding any such determination, this agreement shall continue in full force and effect unless the particular clause, term, or condition held to be illegal or void renders the balance of the agreement impossible to perform.

13. Scope of Work: Scope is further defined in detail with Appendix A of this contract: Services required include assistance to the staff in the evaluation and resolution of problems on current projects. Services would also include new projects assigned by the Chief of Staff and/or the Finance and Internal Services Director of the City. Essentially the services required will require an on-site contract project manager. The contract project manager would both assist staff in problem evaluation and solution as well as assist in the implementation of new projects. The contract manager would be the working manager. Services would also include assisting the Chief of Staff and the Finance and Internal Services Director in the evaluation and solution of new problems encountered as well as advice on long range planning for the Information Technology (IT) Department.

14. Changes in Scope or Price: Changes, modifications, or amendments in scope, price, or fees to this contract shall not be allowed without a prior formal contract amendment approved by the Mayor and the City Council in advance of the change in scope, cost or fees.

15. Freedom of Information Act: Documents prepared while performing city contractual work are subject to the Arkansas Freedom of Information Act. If a Freedom of Information Act request is presented to the City of Fayetteville, ***Plante & Moran, PLLC*** will do everything possible to provide the documents in a prompt and timely manner as prescribed in the Arkansas Freedom of Information Act (A.C.A. §25-19-101 et. seq.) Only legally authorized photocopying costs pursuant to the FOIA may be assessed for this compliance.

16. Documents Comprising Contract: The contract shall include this Agreement for Information Technology Project Implementation & Management Services and attached Appendix A, as well as the following documents, which are incorporated herein by reference:

1) City of Fayetteville's Request for Proposal and all of its addenda and attachments issued in reference to RFP 13-16;
2) ***Plante & Moran, PLLC 's*** Certificate of Insurance as required, listing the City as an additional insured;
3) ***Plante & Moran, PLLC's*** Proposal.

If there is a conflict between the terms of this Agreement and the above referenced documents, the conflict shall be resolved as follows: the terms of this Agreement shall prevail over the other documents, and the terms of the remaining documents shall be given preference in their above listed order.

WITNESS OUR HANDS THIS 7 **DAY OF** January, 2014

PLANTE & MORAN, PLLC

By: _____

Adam Rujan, Partner

ATTEST:

Company Secretary

27400 Northwestern Hwy
Business Address

Southfield, MI. 48037
City, State & Zip Code

Date Signed: 12-18-13

CITY OF FAYETTEVILLE, ARKANSAS

LIONELD JORDAN, Mayor

CITY CLERK / TREASURER
CITY OF
FAYETTEVILLE
ARKANSAS
WASHINGTON COUNTY

ATTEST:

Sondra Smith, City Clerk

Date Signed: 01-09-13

of which the Proposer may undertake and request an opinion to the City as to whether the association, interest or circumstance would, in the opinion of the City, constitute a conflict of interest if entered into by the Proposer. The City agrees to communicate with the Proposer its opinion via e-mail or first-class mail within thirty days of receipt of notification.

8. WITHDRAWAL OF PROPOSAL:

a. A proposal may be withdrawn at any time.

9. LATE PROPOSAL OR MODIFICATIONS:

a. Proposal and modifications received after the time set for the proposal submittal shall not be considered. Modifications in writing received prior to the deadline will be accepted. The City will not be responsible for misdirected bids. Proposers should call the Purchasing Division at (479) 575-8220 to insure receipt of their submittal documents prior to opening time and date listed.

b. The time set for the deadline shall be local time for Fayetteville, AR on the date listed. All proposals shall be received in the Purchasing Division BEFORE the deadline stated. The official clock to determine local time shall be the atomic clock located in the Purchasing Division, Room 306 of City Hall, 113 W. Mountain, Fayetteville, AR.

10. LOCAL, STATE, AND FEDERAL COMPLIANCE REQUIREMENTS:

a. The laws of the State of Arkansas apply to any purchase made under this request for proposal. Proposers shall comply with all local, state, and federal directives, orders and laws as applicable to this proposal and subsequent contract(s) including but not limited to Equal Employment Opportunity (EEO), Disadvantaged Business Enterprises (DBE), & OSHA as applicable to this contract.

b. Pursuant to Arkansas Code Annotated §22-9-203 The City of Fayetteville encourages all *qualified* small, minority and women business enterprises to bid on and receive contracts for goods, services, and construction. Also, City of Fayetteville encourages all general contractors to subcontract portions of their contract to *qualified* small, minority and women business enterprises.

11. COLLUSION:

The Proposer, by affixing his or her signature to this proposal, agrees to the following: "Proposer certifies that his proposal is made without previous understanding, agreement, or connection with any person, firm or corporation making a proposal for the same item(s) and/or services and is in all respects fair, without outside control, collusion, fraud, or otherwise illegal action."

12. RIGHT TO AUDIT, FOIA, AND JURISDICITON:

a. The City of Fayetteville reserves the privilege of auditing a vendor's records as such records relate to purchases between the City and said vendor.

b. Freedom of Information Act: City contracts and documents prepared while performing City contractual work are subject to the Arkansas Freedom of Information Act. If a Freedom of Information Act request is presented to the City of Fayetteville, the (Contractor) will do everything possible to provide the documents in a prompt and timely manner as prescribed in the Arkansas Freedom of Information Act (A.C.A. §25-19-101 et. seq.). Only legally authorized photocopying costs pursuant to the FOIA may be assessed for this compliance.

c. Legal jurisdiction to resolve any disputes shall be Arkansas with Arkansas law applying to the case.

13. CITY INDEMNIFICATION:

The successful Proposer(s) agrees to indemnify the City and hold it harmless from and against all claims, liability, loss, damage or expense, including but not limited to counsel fees, arising from or by reason of any actual or claimed

trademark, patent or copyright infringement or litigation based thereon, with respect to the services or any part thereof covered by this order, and such obligation shall survive acceptance of the services and payment thereof by the City.

14. VARIANCE FROM STANDARD TERMS & CONDITIONS:

All standard terms and conditions stated in this request for proposal apply to this contract except as specifically stated in the subsequent sections of this document, which take precedence, and should be fully understood by Proposers prior to submitting a proposal on this requirement.

15. ADA REQUIREMENT FOR PUBLIC NOTICES & TRANSLATION:

Persons with disabilities requiring reasonable accommodation to participate in this proceeding/event, should call 479.521.1316 (telecommunications device for the deaf), not later than seven days prior to the deadline. Persons needing translation of this document shall contact the City of Fayetteville, Purchasing Division, immediately.

16. PAYMENTS AND INVOICING:

The Proposer must specify in their proposal the exact company name and address which must be the same as invoices submitted for payment as a result of award of this RFP. Further, the successful Proposer is responsible for immediately notifying the Purchasing Division of any company name change, which would cause invoicing to change from the name used at the time of the original RFP. Payment will be made within thirty days of invoice received. The City of Fayetteville is very credit worthy and will not pay any interest or penalty for untimely payments. **Payments can be processed through Proposer's acceptance of Visa at no additional costs to the City for expedited payment processing.** The City will not agree to allow any increase in hourly rates by the contract without PRIOR Fayetteville City Council approval.

17. CANCELLATION:

a. The City reserves the right to cancel this contract without cause by giving sixty (60) days prior notice to the Contractor in writing of the intention to cancel or with cause if at any time the Contractor fails to fulfill or abide by any of the terms or conditions specified.

b. Failure of the contractor to comply with any of the provisions of the contract shall be considered a material breach of contract and shall be cause for immediate termination of the contract at the discretion of the City of Fayetteville.

c. In addition to all other legal remedies available to the City of Fayetteville, the City reserves the right to cancel and obtain from another source, any items and/or services which have not been delivered within the period of time from the date of order as determined by the City of Fayetteville.

d. In the event sufficient budgeted funds are not available for a new fiscal period, the City shall notify the vendor of such occurrence and contract shall terminate of the last day of the current fiscal period without penalty or expense to the City.

18. ASSIGNMENT, SUBCONTRACTING, CORPORATE ACQUISITIONS AND/OR MERGERS:

a. The Contractor shall perform this contract. No assignment of subcontracting shall be allowed without prior written consent of the City. If a Proposer intends to subcontract a portion of this work, the Proposer shall disclose such intent in the proposal submitted as a result of this RFP.

b. In the event of a corporate acquisition and/or merger, the Contractor shall provide written notice to the City within thirty (30) calendar days of Contractor's notice of such action or upon the occurrence of said action, whichever occurs first. The right to terminate this contract, which shall not be unreasonably exercised by the City, shall include, but not be limited to, instances in which a corporate acquisition and/or merger represent a conflict of interest or are contrary to any local, state, or federal laws. Action by the City awarding a proposal to a firm that has disclosed its intent to assign or subcontract in its response to the RFP, without exception shall constitute approval for purpose of this Agreement.

19. NON-EXCLUSIVE CONTRACT:

Award of this RFP shall impose no obligation on the City to utilize the vendor for all work of this type, which may develop during the contract period. This is not an exclusive contract. The City specifically reserves the right to concurrently contract with other companies for similar work if it deems such an action to be in the City's best interest. In the case of multiple-phase contracts, this provision shall apply separately to each item.

20. ADDITIONAL REQUIREMENTS:

The City reserves the right to request additional services relating to this RFP from the Proposer. When approved by the City as an amendment to the contract and authorized in writing prior to work, the Contractor shall provide such additional requirements as may become necessary.

21. SERVICES AGREEMENT:

A written agreement, in substantially the form attached, incorporating the RFP and the successful proposal will be prepared by the City, signed by the successful Proposer and presented to the City of Fayetteville for approval and signature of the Mayor.

22. INTEGRITY OF REQUEST FOR PROPOSAL (RFP) DOCUMENTS:

Proposers shall use the original RFP form(s) provided by the Purchasing Division and enter information only in the spaces where a response is requested. Proposers may use an attachment as an addendum to the RFP form(s) if sufficient space is not available on the original form for the Proposer to enter a complete response. **Any modifications or alterations to the original RFP documents by the Proposer, whether intentional or otherwise, will constitute grounds for rejection of such RFP response.** Any such modifications or alterations a Proposer wishes to propose shall be clearly stated in the Proposer's RFP response and presented in the form of an addendum to the original RFP documents.

23. OTHER GENERAL CONDITIONS:

a. Proposers must provide the City with their proposals signed by an employee having legal authority to submit proposals on behalf of the Proposer. The entire cost of preparing and providing responses shall be borne by the Proposer.

b. The City reserves the right to request any additional information it deems necessary from any or all Proposers after the submission deadline.

c. The request for statement of qualification is not to be construed as an offer, a contract, or a commitment of any kind; nor does it commit the city to pay for any costs incurred by Proposer in preparation. It shall be clearly understood that any costs incurred by the Proposer in responding to this request for proposal is at the Proposer's own risk and expense as a cost of doing business. The City of Fayetteville shall not be liable for reimbursement to the Proposer for any expense so incurred, regardless of whether or not the proposal is accepted.

d. If products, components, or services other than those described in this bid document are proposed, the Proposer must include complete descriptive literature for each. All requests for additional information must be received within five working days following the request.

e. **Any uncertainties shall be brought to the attention to Andrea Foren immediately via telephone (479.575.8220) or e-mail (aforen@ci.fayetteville.ar.us). It is the intent and goal of the City of Fayetteville Purchasing Division to provide documents providing a clear and accurate understanding of the scope of work to be completed and/or goods to be provided. We encourage all interested parties to ask questions to enable all Proposers to be on equal terms.**

f. Any inquiries or requests for explanation in regard to the City's requirements should be made promptly to Andrea Foren, City of Fayetteville, Purchasing Agent via e-mail (aforen@ci.fayetteville.ar.us) or telephone (479.575.8220). No oral interpretation or clarifications will be given as to the meaning of any part of this request for proposal. All questions, clarifications, and requests, together with answers, if any, will be

provided to all firms via written addendum. Names of firms submitting any questions, clarifications, or requests will not be disclosed until after a contract is in place.

g. At the discretion of the City, one or more firms may be asked for more detailed information before final ranking of the firms, which may also include oral interviews.

h. Any information provided herein is intended to assist the Proposer in the preparation of proposals necessary to properly respond to this RFP. The RFP is designed to provide qualified Proposers with sufficient basic information to submit proposals meeting minimum specifications and/or test requirements, but is not intended to limit a RFP's content or to exclude any relevant or essential data.

i. Proposers irrevocably consent that any legal action or proceeding against it under, arising out of or in any manner relating to this Contract shall be controlled by Arkansas law. Proposer hereby expressly and irrevocably waives any claim or defense in any said action or proceeding based on any alleged lack of jurisdiction or improper venue or any similar basis.

j. The successful Proposer shall not assign the whole or any part of this Contract or any monies due or to become due hereunder without written consent of City of Fayetteville. In case the successful Proposer assigns all or any part of any monies due or to become due under this Contract, the Instrument of assignment shall contain a clause substantially to the effect that is agreed that the right of the assignee in and to any monies due or to become due to the successful Proposer shall be subject to prior liens of all persons, firms, and corporations for services rendered or materials supplied for the performance of the services called for in this contract.

k. The successful Proposer's attention is directed to the fact that all applicable Federal and State laws, municipal ordinances, and the rules and regulations of all authorities having jurisdiction over the services shall apply to the contract throughout, and they will be deemed to be included in the contract as though written out in full herein. The successful Proposer shall keep himself/herself fully informed of all laws, ordinances and regulations of the Federal, State, and municipal governments or authorities in any manner affecting those engaged or employed in providing these services or in any way affecting the conduct of the services and of all orders and decrees of bodies or tribunals having any jurisdiction or authority over same. If any discrepancy or inconsistency should be discovered in these Contract Documents or in the specifications herein referred to, in relation to any such law, ordinance, regulation, order or decree, s/he shall herewith report the same in writing to City of Fayetteville.

1. The following documents are included with this solicitation: N/A

1.) OVERVIEW: The City of Fayetteville is seeking proposals to provide support services to the City's IT function. Services required include assistance to the staff in the evaluation and resolution of problems on current projects. Services would also include new projects assigned by the Chief of Staff and/or the Finance and Internal Services Director of the City. Essentially the services required will require an on-site contract project manager. The contract project manager would both assist staff in problem evaluation and solution as well as assist in the implementation of new projects. The contract manager would be the working manager. Services would also include assisting the Chief of Staff and the Finance and Internal Services Director in the evaluation and solution of new problems encountered as well as advice on long range planning for the Information Technology (IT) Department.

The services requested will require previous hands on experience with hardware and software currently being used by the City of Fayetteville. Proposals should contain an all-inclusive hourly rate.

2.) INTENT:

a. The City intends to select a primary contract manager for an initial six (6) month term with renewable options in additional six (6) month increments.

b. The City desires to contract with experienced personnel to optimize the City's operation needs in a timely, highly skilled, and productive manner.

3.) CURRENT TECHNOLOGY INFRASTRUCTURE:

a. AS400 for central processing

b. 28 sites exist on the City's network

   i. Eight (8) are connected through a fiber network

   ii. Nineteen (19) are on a leased TELCO connections

   iii. One (1) is connected using site-to-site VPN across the internet

4.) CURRENT TECHNOLOGY APPLICATIONS:

a. New World System (ERP): The City is running New World System on an AS400 platform which was initially installed in the 1990's. It is the City's intent to purchase and implement a .net solution in the near future; however, a new system has not been procured at this time.

b. Electronic Data Management System: used for document imaging and management

c. Hansen Asset Management: Used for several different purposes including generation of work orders, permitting, and in some cases inventory tracking. Currently, the City is using version 7.77 which is being run on a Microsoft SQL server.

d. The City maintains a website using WEB 1.0 technology.

e. The City is currently in the process of migrating email platforms from Novell GroupWise to Microsoft Office 365 including upgrading all users to Office 2013. (Current major project).

f. The City uses NovaTime for time and attendance both to schedule and monitor work hours.

5.) SCOPE OF WORK: In serving this contract, the selected entity will be expected to perform said scope of services as assigned:

a. Proposer will provide the City with hands on consulting and related professional services for any and all projects specified by the City during the contract period. Proposer shall provide written or oral progress reports as requested by the City.

b. Awarded Proposer shall be on site as needed within the work week. Amount of time on-site is flexible as long as contract needs are being properly taken care of.

c. The City estimates approximately 520 hours over the first six (6) month term.

d. Current major project includes assisting and helping the IT Department manage the e-mail conversion from GroupWise to Outlook.

e. Provide good customer service to both internal and external customers.

f. Respond to common inquiries or complaints from users.

g. Assist in the development of IT applications and business processes in view of evolving technology.

h. Provide regular weekly and monthly updates to the Chief of Staff and Chief Financial Officer as to the progress of projects, resolution & work plans for problem resolution of issues that arise from the daily operations of the City business & outlines of IT Division priorities outlined for the immediate work period.

6.) PROPOSAL SUBMITTAL: In responding to this request, firms should include the following information in addition to other requested information and pertinent company information related to the selection criteria:

a. Proposals should be prepared simply and economically, providing a straight forward, concise description its ability to meet the requirements for the project. Fancy bindings, colored displays, and promotional material are not required. Emphasis should be on completeness and clarity of content. All documents should be typewritten on standard 8 ½" x 11" white papers and bound in one volume. Exceptions would be schematics, exhibits, or other information necessary to facilitate the City of Fayetteville's ability to accurately evaluate the proposal. Limit proposal to twenty-five (25) pages or less, excluding one-page

b. **References:** A client reference list for which similar work has been performed within the past five (5) years.

c. **Experience:** Provide a general description of the firm, its history, primary types of work, organizational structure, etc.

d. **Fees**:

   i. State **hourly fee** to be charged for services. Fee shall be all inclusive and include all travel, relocation, services, etc. The City shall not pay additional travel expenses. See also fees discussed in the Signature Submittal section.

e. **Company**:

   i. ***Experience***: Proposer shall provide a detailed description of similar city and/or county projects or contracts that currently use the proposed system, completed and/or presently provided during the past five (5) years. Provide complete contact information, name, address, phone and emails for all references.

   ii. ***Company Principals***: Provide a brief biographic overview of the Company's key principals.

   iii. ***Capabilities***: Proposer shall provide a description of limitations relative to facilities, staff personnel, on-going projects/ contracts, etc. Specifically, provide in RFP response what priority will be placed on this project.

   iv. ***Company Organization:***

      1. ***Primary Business***: Proposers shall describe company's primary business interest and/or operations including organization and affiliations. Include the magnitude of your operation as it relates to this project.

      2. ***Company History***: Provide pertinent company historical information that will demonstrate your capability to successfully accomplish this project.

f. **Personnel**:

   Staff: The Proposer shall provide a description of how work will be assigned to effectively facilitate the requirements of this project.

   i. ***Resumes***: The Proposer shall provide maximum one-page resumes of key personnel/person intended to be utilized for this project. One-page resumes do not count towards page restrictions outlined in this RFP. Resumes shall include, at a minimum:

      - Position Title
      - Tenure with Proposer

- Experience
- Other related information

7.) CONTRACT FORMATION:

a. If the negotiation produces mutual agreement, the draft contract as a part of this package will be constructed and forwarded to the Fayetteville City Council for approval. If negotiations with the highest ranking Proposer fail, negotiations shall be initiated with the next highest ranking Proposer until an agreement is reached. The City reserves the right to reject all offers and end the process without executing a contract.

8.) PROPOSAL CONTENT:

a. Proposals should be prepared simply and economically, providing a straight forward, concise description its ability to meet the requirements for the project. Fancy bindings, colored displays, and promotional material are not required. Emphasis should be on completeness and clarity of content. All documents should be typewritten on standard 8 ½" x 11" white papers and bound in one volume. Exceptions would be schematics, exhibits, or other information necessary to facilitate the City of Fayetteville's ability to accurately evaluate the proposal. Limit proposal to twenty-five (25) pages or less, excluding one-page team resumes.

9.) TERM OF CONTRACT:

a. The initial term of the contract shall be for a six (6) month period. The contract shall be renewable by mutual consent, on a mutually agreed basis. The contract may be terminated by either party by giving the other party written notice of such intent not less than thirty (30) days prior to the effective date of the termination. In the event of termination, claims for compensation owed the consultant by the City shall be limited to verifiable services rendered. The City reserves the right not to use the "primary" contract solely. The City reserves the right to contract with any firm responding to this request, based on specific project needs and experience needed.

10.)DEMONSTRATION & ORAL PRESENTATION:

a. Following the evaluation of the proposals, the Selection Committee may request that the top ranking firms make an oral presentation or be interviewed. If presentations are necessary, they will take place in Fayetteville, Arkansas. Notices will be sent by the Purchasing Division.

11.) <u>ANTICIPATED PROJECT TIMELINE:</u> *subject to change*

Date	Time	Description
Tuesday, October 15, 2013	N/A	Advertisement for RFQ
Friday, November 01, 2013	**Before 2:00 PM**	**Deadline to submit a Proposal**
Tuesday, November 12, 2013	N/A	Contract negotiations finalized and contract signed by Vendor
Friday, November 15, 2013	4:00 PM	Internal deadline for packet to be turned into City Clerk's Office for 12/03/13 City Council Meeting
Tuesday, November 26, 2013	**4:30 PM**	**Agenda Session for 12/03/13 City Council Meeting**
Tuesday, December 03, 2013	**6:00 PM**	**City Council Meeting to consider contract**

12.)SELECTION CRITERIA: **<u>SELECTION CRITERIA:</u>** The following criteria will be used by the City to evaluate and score responsive proposals. Proposers shall include sufficient information to allow the City to thoroughly evaluate and score their proposal. Each proposal submitted is not required to be ranked by the selection committee; however, all proposals will be evaluated. The contract may be awarded to the most qualified firm, per the evaluation criteria listed below, based on the evaluation of the selection committee.

1) 25% **Qualifications in Relation to Specific Project to be Performed:** Information reflecting qualifications of the firm. Indicated specialized experience and technical competence of the firm in connection with the type and complexity of the service required. Subcontractors, if used, must be listed with information on their organization.

2) 25% **Experience, Competence, and Capacity for Performance:** Information reflecting the names, titles, and qualifications (including experience and technical competence) of the major personnel assigned to this specific project. Provide detailed breakdown of subcontractor's staff to be used and how they are to be used to supplement your staff. This section of the evaluation criteria includes the amount of work presently underway for your firm; please present this in submittal.

3) 20% **Proposed Method of Doing Work:** A proposed work plan (description of how the project would be conducted as well as other facts concerning approach to scope you wish to present) indicating methods and schedules for accomplishing scope of work. Include with this the amount of work presently underway.

4) 15% **Past Performance:** Previous evaluations shall be considered a significant factor. If previous evaluations with the City are not available, the professional firm's past performance records with City and others will be used, including quality of work, timely performance, diligence, ability to meet past budgets, and any other pertinent information. Firm will provide a list of similar jobs performed and person whom the City can contact for information.

5) 15% **Price:** Complete hourly fee to the City for all services described herein including but not limited to fees for services, travel, lodging, re-location fees, etc.

City of Fayetteville
RFP 13-16, IT Support Services
SECTION E: Signature Submittal

1. Disclosure Information

Proposer must disclose any possible conflict of interest with the City of Fayetteville, including, but not limited to, any relationship with any City of Fayetteville employee. Proposer response must disclose if a known relationship exists between any principal or employee of your firm and any City of Fayetteville employee or elected City of Fayetteville official.

If, to your knowledge, no relationship exists, this should also be stated in your response. Failure to disclose such a relationship may result in cancellation of a purchase and/or contract as a result of your response. This form must be completed and returned in order for your bid/proposal to be eligible for consideration.

PLEASE CHECK ONE OF THE FOLLOWING TWO OPTIONS, AS IT APPROPRIATELY APPLIES TO YOUR FIRM:

_____1) NO KNOWN RELATIONSHIP EXISTS

_____2) RELATIONSHIP EXISTS (Please explain): _____

I certify that; as an officer of this organization, or per the attached letter of authorization, am duly authorized to certify the information provided herein are accurate and true; and my organization shall comply with all State and Federal Equal Opportunity and Non-Discrimination requirements and conditions of employment.

2. At the discretion of the City, one or more firms may be asked for more detailed information before final ranking of the firms, which may also include oral interviews. **NOTE: Each Proposer shall submit to the City a primary contact name, e-mail address, and phone number (preferably a cell phone number) where the City selection committee can call for clarification or interview via telephone.**

Name of Firm: _____

Name of Primary Contact: _____

Title of Primary Contact: _____

Phone#1 (cell preferred): _____ Phone#2: _____

E-Mail Address: _____

3. Please acknowledge receipt of addenda for this invitation to bid, request for proposal, or request for qualification by signing and dating below. All addendums are hereby made a part of the bid or RFP documents to the same extent as though it were originally included therein. Proposers/Bidders should indicate their receipt of same in the appropriate blank listed herein. Failure to do so may subject vendor to disqualification.

ADDENDUM NO.	SIGNATURE AND PRINTED NAME	DATE ACKNOWLEDGED

4. PRICE BID: Firm proposes the following all inclusive hourly rate. Rate includes all expenses to the city including but not limited to services, travel, overhead, re-location, etc. The City shall not pay additional fees outside of contracted hourly rate for the services listed in this RFP. In the event of contract extension or renewal, the number of hours will be increased.

Item	Description	Estimated Quantity (# hours in 6 months)	Proposed Hourly Rate		Total Fee for 6 months
1	IT Services as described	520	x $ _____	=	$ _____

5. As an interested party on this project, you are required to provide debarment/suspension certification indicating in compliance with the below Federal Executive Order. Certification can be done by completing and signing this form.

Federal Executive Order (E.O.) 12549 "Debarment and Suspension" requires that all contractors receiving individual awards, using federal funds, and all sub-recipients certify that the organization and its principals are not debarred, suspended, proposed for debarment, declared ineligible, or voluntarily excluded by any Federal department or agency from doing business with the Federal Government.

6. Signature certifies that neither you nor your principal is presently debarred, suspended, proposed for debarment, declared ineligible, or voluntarily excluded from participation in this transaction by any federal department or agency.

Questions regarding this form should be directed to the City of Fayetteville Purchasing Division.

NAME: _____

COMPANY: _____

PHYSICAL ADDRESS: _____

MAILING ADDRESS: _____

PHONE: _____ FAX: _____

E-MAIL: _____

SIGNATURE: _____

TITLE: _____

DATE: _____

Proposal to Provide IT Support Services

CITY OF FAYETTEVILLE, AR | NOVEMBER 1, 2018

plante moran

plante moran

Plante & Moran, PLLC
27400 Northwestern Highway
P.O. Box 307
Southfield, MI 48037-0307
Tel: 248.352.2500
Fax: 248.352.0018
plantemoran.com

November 1, 2013

Ms. Andrea Foren, CPPO, CPPB
City of Fayetteville, AR
113 W. Mountain – Room 306
Fayetteville, AR 72701

Dear Ms. Foren:

Plante & Moran, PLLC (Plante Moran) is pleased to respond to your Request for Proposal to provide IT Support Services to the City of Fayetteville, AR. We understand that the City is seeking proposals to provide support services to the City's IT function, including assistance to the staff in the evaluation and resolution of problems on current projects. We understand that the services requested will require previous hands on experience with hardware and software currently being used by the City. We are confident that we have a deep understanding of many of the City systems that would be impacted by this contract, including:

- New World Systems (ERP); reviewed as part of the 2010 IT Assessment
- Electronic Data Management System (EDMS); reviewed as part of the 2010 IT Assessment
- Hansen Asset Management; reviewed as part of the 2010 IT Assessment

In addition, Plante Moran assisted the City in soliciting and analyzing vendor proposals for the Microsoft Office 365 initiative. Overall, we feel that our past experience and knowledge of City operations, coupled with our deep project management experience and industry knowledge expertise would help the City effectively implement the important IT projects as defined in the City's project portfolio.

As part of our proposal, we are offering the City an experienced information technology leader, Mr. Dale Vanderford. Dale was Director of Technology and Operations for Washtenaw County, Michigan and spent his last two years prior to joining Plante Moran on implementing and managing the consolidation of the network infrastructure teams and data centers for Washtenaw County and the City of Ann Arbor, MI. Prior to that, Dale managed the operation and management of the County's IT department, a $9 million, 30 person department. During Dale's tenure in the department, several infrastructure upgrades occurred, including the construction of a 90 mile fiber optic network, two data center moves, several new buildings were brought online, two Microsoft Exchange Upgrades, and the implementation of an Asset management system was completed. There were also several sizeable software selections and implementations, including an ERP System, document management, video surveillance software, and the changing of a Police Records Management system (New World Systems, running on an A/S 400) that coordinated the changing of Police records in 9 separate jurisdictions to one single package. During Dale's tenure, the department consistently received national accolades, including several consecutive year appearances on the Digital Counties Survey top 10 and two consecutive years on CIO Magazine's Top 100 IT departments list. Dale joined the Plante Moran staff in 2011.

Praxity MEMBER
GLOBAL ALLIANCE OF INDEPENDENT FIRMS

Plante Moran was founded as a professional services firm in 1924. We have been specializing in assisting municipalities with technology matters for over 30 years. Some highlights of our practice include:

- Significant and recent experience in conducting Project Management, Information Technology Assessments and related Technology Consulting for municipal clients including current and recent engagements for the following entities
  - City of Chandler, AZ
  - Ottawa County , MI
  - Town of Hempstead, NY
  - Johnson County, KS*
  - Waukesha County, WI*
  - Muskegon County, MI*
  - City of Carlsbad, CA
  - Washtenaw County, MI*
  - City of Mesa, AZ*
  - Oakland County, MI*

  "" – denotes organizations that have been recognized by the Center for Digital Government as winners for their respective populations served*
- Within the public sector, we are independent from all hardware, software and communications products and solutions allowing us complete independence when recommending solutions for our public sector clients.
- Significant expertise in the area of IT Governance. In fact, our proposed Project Director, Adam Rujan, has recently contributed a chapter on the topic to a recent PTI published book.
- Active participation in numerous organizations serving the technology needs of our municipal clients including Public Technology Institute (PTI), Government Management Information Sciences (GMIS) and Governmental Finance Officers Association (GFOA)

Our proposed team blends the technology and municipal operations knowledge with seasoned, consultants to work on this important initiative. We believe that based upon these experiences and the quality of our proposed team, we are well qualified to provide objective and project management services to the City.

If you have any questions concerning this proposal, please contact:

Mr. Adam Rujan, Partner
27400 Northwestern Hwy.
Southfield, MI 48037-0307
Phone Number: 800.544.0203
adam.rujan@plantemoran.com

Mr. Rujan is authorized to contractually bind the Firm. Plante Moran has provided our standards terms and conditions for the City's review. Our proposal is valid for 90 days from the response date.

Very truly yours,
PLANTE & MORAN, PLLC

Adam Rujan, Partner

Table of Contents

1. References 4
2. Experience 6
3. Fees 10
4. Company 11
5. Personnel 18
6. Appendix A – Terms and Conditions 22
7. Appendix B – Forms 25

1. References

City of Fayetteville, AR
Mr. Paul Becker
Finance Director
113 West Mountain Street
Fayetteville, AR 72701
479-575-8330
pbecker@ci.fayetteville.ar.us

Information Technology Assessment, Strategic Planning & Implementation

Conducted an Information Technology Assessment for the County that included a review of all aspects of organization, administration and use of technology within the County. As part of the engagement we conducted IT departmental interviews, interviews with all County staff departments, an end-user survey of all County staff and a benchmarking survey of peer County organizations from across the country. Specific areas of focus included IT governance, IT organization structure, enterprise resource planning (ERP), line of business applications (e.g., GIS, courts, etc.), cost allocation methodology, IT infrastructure, project management approach, project portfolio management and identifying opportunities for alternative delivery of services.

Muskegon County, MI
Mr. Eric Stevens
Circuit Court Administrator
141 E. Apple Avenue
Muskegon, MI 49442
(231)724-6293

StevensEr@co.muskegon.mi.us

ECM Software Selection

Assisted the County in the selection of a new Electronic Content Management Software solution. Activities included conducting of interviews, RFP development, proposal analysis and assistance to the County in the due diligence process of reviewing various solutions.

ECM Implementation Management Assistance

Currently assisting the County in the implementation of a new Electronic Content Management Software solution by providing project management assistance, including PMO support, project administration, and business analysis services.

Ottawa County, MI
Mr. Alan Vanderberg
County Administrator
Fillmore Street Complex
12220 Fillmore Street
Room 310
West Olive, MI 49469
616-738-4068

avanderberg@miottawa.org

IT Assessment

As a continuous improvement effort, conducted an Information Technology Assessment that included a review of all aspects of the organization, but specifically focused on creating a roadmap for readying the organization to adopt emerging technologies. Examined the current department technologies process and staffing and provided a 5-year technology plan that will enable the department to embrace the current trends in technology and those that are still evolving. The engagement also included an assessment of the current technologies in use as well as an analysis of the opportunities available for collaboration with other entities such as other cities, townships, villages, and school districts. Specific areas of focus included Organizational Support Structure, Infrastructure, IT Governance, and plan for adoption of new technologies.

City of Carlsbad, CA
Ms. Cynthia Haas
Deputy City Manager
1200 Carlsbad Village Dr.
Carlsbad, CA 92008
760-434-2829

IT Assessment

Assisted the City with an information technology assessment and evaluation of IT sourcing options. Activities include conducting an assessment in the areas of organization, administration, infrastructure, and enterprise applications. Compiled interim issues and opportunities and cost savings opportunities and presented these to City management. Conducted comparative research of similar organizations. Prepared a cost of services analysis relative to IT services. Presented IT assessment results and plan to the City management.

City of Mesa, AZ
Ms. Diane Gardner
Chief Information Officer (CIO)
200 South Center Street
Building 2
P.O. Box 1466
Mesa, AZ 85211-1466
480-644-3449

ERP Implementation Management Assistance

Assisted the City in the implementation of the selected ERP solution as part of the city's project management office (PMO). Also had direct project management responsibility for a number of implementation teams.

City of Colorado Springs, CO
Mr. Jesse James
Interim CIO
30 S. Nevada Ave.
Colorado Springs, CO 80903
719-385-5767

IT Assessment

Assisted the City with an information technology assessment and evaluation of IT sourcing options. Activities include conducting an assessment in the areas of organization, administration, infrastructure, and enterprise applications. Compiled interim issues and opportunities and cost savings opportunities and presented these to City management. Conducted comparative research of similar organizations. Prepared a cost of services analysis relative to IT services. Presented IT assessment results and plan to the City management.

2. Experience

Summary

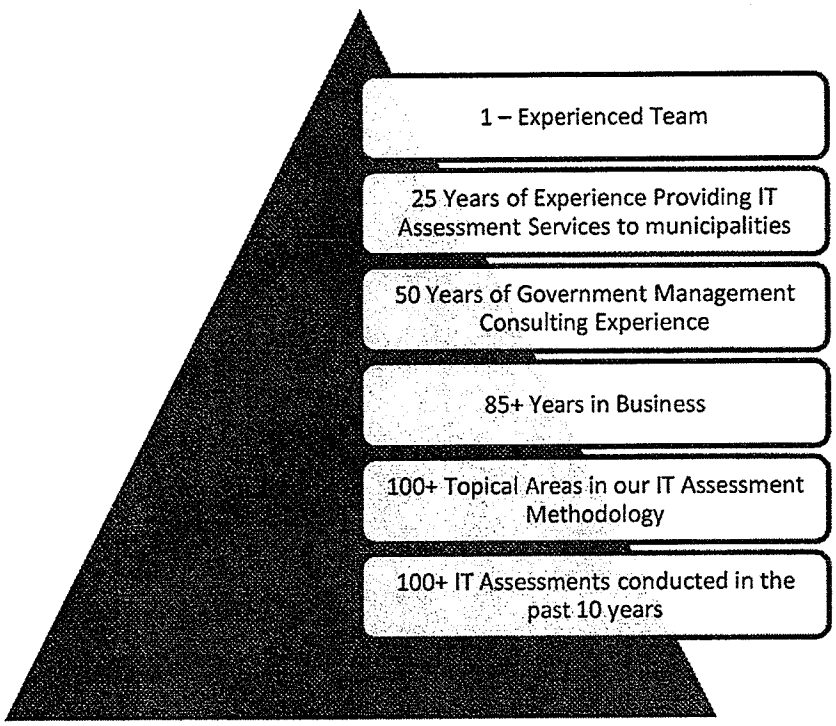

Plante Moran Background and Experience

Founded in 1924, Plante & Moran, PLLC (Plante Moran) is the twelfth largest management consulting and public accounting firm in the United States. Plante Moran operates as a partnership. Plante Moran's staff of over 1,600 persons is organized into four major service areas: Management Consulting, Accounting and Auditing, Tax Consulting, and Personal Financial Planning Services.

Over the past several years, Plante Moran has continually expanded the scope and experience of its Management Consulting Services Group. The firm is committed to continuing this growth by retaining and attracting qualified professionals to provide the broad range of management and technical services that are necessary to effectively serve the needs of our clients.

Plante Moran takes great pride in the quality of services it provides to its clients. We have a rigorous set of quality controls designed to provide assurance that professional standards are followed and our clients receive a high quality product. Plante Moran takes equal pride in our people and our professional work environment. Some of the facts about our firm that we are proud of include:

- Our partnership group is comprised of 19% women, which is the highest percentage of female equity partners among the nation's largest public accounting firms, according to CPA Personnel Report, a national public accounting trade publication.
- Staff turnover rate below 15% which is significantly lower than that of other national public accounting firms.

- The firm has been named to Fortune Magazine's "100 Best Companies to Work for in America" for the last 14 years.
- The firm is ranked 55th on list of Training magazine's "Top 100 Training Organizations"
- Plante Moran's Management Consulting Group, consisting of over 125 dedicated consultants, is a versatile, full service consulting organization with a proven track record for providing quality professional services.

Our emphasis and commitment to management consulting has resulted in the extension of the consulting practice into all major aspects of government and education addressing our clients' unique needs related to information technology, security, compliance, and policy.

Plante Moran has become a leader in providing services to governmental organizations. At present, we work with well over 200 County and local governments. Our professionals have made substantial commitments to working with local, County and state government agencies. Our extensive experience with governmental clients has enabled us to assemble a project team that we believe is uniquely qualified to perform the proposed project.

Government Consulting Services Overview

Plante Moran has assumed a leadership role in providing consulting services to governmental entities. The range of services we provide includes the following:

- Information Technology Consulting
- Communications & Networking Services
- Project Management and Oversight
- Operations Analysis
- Consolidation Studies
- Organizational Planning and Development
- Financial Management Services
- Human Capital Management and Development
- Market Research Services
- Business Planning and Feasibility Analysis
- Employee Benefits Analysis
- Assurance Services
- Real-estate, Design and Construction Consulting

Plante & Moran's management consultants have made a significant commitment to assist governmental clients develop and implement appropriate technology. The services we offer address virtually all aspects of information systems including:

- Information Technology Assessments including:
  - Organization
  - Administration
  - Technology
- Strategic Information Technology planning
- Communications and networking including:
  - WAN/LAN architecture and development
  - Network analysis and optimization
  - Telecommunications
  - Voice/data/video integration

- Performance assessment
- Bandwidth utilization

- Security assurance including:
  - Information system reviews
  - System trust services
  - Network security reviews
  - SAS/70 reviews
- Solution delivery including:
  - Needs assessment
  - Cost benefit analysis
  - Requirements definition
  - Software selection
  - Contract negotiations
  - Process improvement
  - Implementation management
- Outsourcing analysis
- e-Government Strategy and development
- Technology management
- Project management

We have developed significant research capabilities to assist our clients in new and emerging technologies and issues. In addition, our consultants are very active in making presentations to a variety of governmental organizations on current issues. Our library of resource materials is readily available to our consultants to effectively satisfy our clients' unique needs.

Like many technology project management projects the firm has conducted, clients typically have particular areas of interest to be explored. Our qualifications and capabilities in areas of interest likely to be reviewed as part of the project with the City are as follows:

Area of Interest	Firm Qualifications
Infrastructure	Our Communications and Networking practice includes staff who have been involved on IT planning and assessment projects to conduct a full assessment of IT infrastructure including hardware, data, communications, networking, server, storage and data center environments.
Disaster Recovery	Our Security Assurance practice includes staff who are focused on the development and/or review of Disaster Recovery, Business Continuity and COOP plans.

Area of Interest	Firm Qualifications
Help Desk / ITIL	Our staff have significant experience in conducting help desk assessments and performance metric development. Additionally, we have staff who are ITIL V3 Foundation Certified.
Project and Task Management	Our staff have significant background in project management procedures, methods and tools. We use project management techniques and supporting tools on our technology planning initiatives that are covered in more detail in our project work plan. This includes the use of MS Project and MS SharePoint as a collaborative environment for managing client projects.
Industry Standards	Our Operations Improvement practice within the firm has significant experience in the development and deployment of Balanced Scorecard programs for our clients more specifically in the Manufacturing sector. Our governmental consulting staff have implemented a number of these concepts for our clients although not specifically under the mantra of Balanced Scorecard to include the establishment of metrics for measuring IT performance and the tools and methods for monitoring and reporting on these metrics.
Internet / Intranet	Our Web Services group has experience in developing e-government strategies and significant experience in deploying both Internet and Intranet sites for public sector clients. Additionally, our web assessment projects include the review of a City's overall approach towards Internet, Intranet, e-government, portals and Web 2.0 technologies. Through our involvement at PTI we have also been exposed to creative uses of web technologies by other governmental jurisdictions.
Policies and Service Level Agreement	Our staff have significant experience in the review of IT policies, procedures and service level agreements. Through numerous projects that we have conducted over the last several years we have developed a repository of IT policies and procedures used by other municipal jurisdictions.

Overall, our approach to each consulting engagement is structured to provide the services and level of professional support required to meet the individual needs of the client. Although we have developed well-defined methodologies for conducting consulting engagements, we do not attempt to impose a rigid structure onto each assignment. Rather, we attempt to understand the fundamental challenges and opportunities of our clients and develop an approach that addresses those particular conditions.

3. Fees

Our fee is based on our blended consulting rate of $195 per hour. This hourly rate is all inclusive and will include all travel and other incidental expenses. At a total of 520 hours, this equates to a total cost for this effort of $101,400.

These services are expected to commence about January 1, 2014 and continue for 6 months. We anticipate that Mr. Vanderford will be on site every other week, or some other mutually agreeable schedule.

Additional Plante Moran experts can be made available, on an, as needed, and requested basis at this same cost.

4. Company

Experience

Plante Moran has been providing software selection and implementation consulting services to governmental clients for the last thirty years. We provide the full-range of services related to the planning for, selection, contract negotiations and implementation of new technologies and processes for municipal governmental software.

The following matrix identifies desired consultant capabilities, skills and core competencies required as part of this engagement and how our firm matches up against these criteria:

Required Capabilities	Plante Moran Match
1) Experience with governmental systems and implementations with a scope similar to the City's size of project.	Our firm has been involved in assisting governmental clients in the selection and implementation of technology solutions for over 30 years including clients of comparable size and complexity to the City.
2) Strong written and oral communications skills that engage the entire team and maintain efficient communications and decision-making throughout the engagement. The City requires candidates with experience giving technical or executive presentations and practicing disciplined documentation throughout the entire process.	All of the senior staff assigned to the project regularly communicate with Councils, Commissions and Boards and senior management within governmental organizations either as part of the facilitation of projects for the client or in giving oral presentations presenting the results of a project.
3) Ability to form effective working relationships with management, supervisory, operational, and technical personnel from the City, other involved vendors, and any other stakeholders engaged in the success of this project.	Our selection process is a very participatory one that includes senior management, technical staff, operational staff, outside vendors and other relevant stakeholders. We are very adept at working with all of these constituencies.
4) Ability to take direction and then work without immediate supervision to stay focused on meeting the City's requirements with high satisfaction.	Our team includes staff that are experienced and self-motivated requiring little direction while able to lead the project or phases they are responsible for.
5) Demonstrate a willingness to implement innovative program and project management methodologies, approaches and tools.	We regularly look for innovative ways in which to deliver our services in a more efficient and effective manner through the use of newer technologies and methods. For example, as a standard part of all projects performed we provide a collaboration center (e.g. MS SharePoint) in which to manage all activities on the project that is accessed by the client and our team.

Required Capabilities	Plante Moran Match
6) Highly disciplined, focused leader, who can effectively assess project risk and take action to mitigate risks.	Staff assigned to the project are experienced in these types of projects and use project management methods including regular assessment of project risk. Furthermore, our significant experience in the selection and implementation of software solutions has resulted in our ability to identify risks common to these types of projects, early in the project.
7) Ability to consistently meet deadlines while exercising strong project and fiscal controls.	Our staff are committed to meeting deadlines that are established by the client for an engagement while meeting both quality and fiscal controls.
8) Professional behavior and appearance.	Plante Moran has a very rigorous hiring process to ensure that there is a fit between the individual and the core values of the firm that stress services to the client in a professional manner.
9) Ability to provide clear direction to multiple stakeholders and hold them accountable for producing the required results.	At the start of the project, we engage the various stakeholders on the project that will be required to provide input during the process to articulate what we will need from them and when. This information is captured in a Project Charter that is developed at the start of the project.
10) Passion for escalating issues appropriately to ensure quick problem resolution.	The process used on our projects ensures that any outstanding issues are quickly escalated such that delays in the project do not occur. This escalation process is defined during the early stages of the project. Furthermore, we will regularly conduct project reviews with client management to identify and discuss outstanding issues and risks.
11) Proven ability to organize large projects, structure the processes for change management, risk management and project controls.	Our staff is adept on the various aspects of managing and delivering large-scale information technology projects within the public sector. We are well aware of both the technical and organizational challenges in implementing a new system and regularly counsel our clients on various dimensions and related to the fact that implementing a new system will affect people, process and technology.

The following list provides a description of the municipal IT projects that our firm has performed over the last several years. Several of these past clients are provided as references in *Section 2* of this proposal response.

Client Name	Project Title	Project Date
City of Pueblo, CO	ERP Due Diligence and Implementation Management Assistance	Mar 2013 – Present
Cape Fear Public Utility Authority, NC	ERP Needs Assessment	Mar 2013 – Present
Village of Northbrook, IL	ERP Selection	Mar 2013 – Present
New Braunfels Utilities, TX	ERP Needs Assessment and Selection	Dec 2012 – Present
City of Grand Rapids, MI	ERP Needs Assessment and Selection	Nov 2012 – Present
County of Sumner, TN	ERP Needs Assessment and Selection	Aug 2012 – Present
City of Ann Arbor, MI	HR/Payroll Software Assessment	Jul 2012 – Dec 2012
City of Corpus Christi, TX	ERP Selection	Jul 2012 – June 2013
Town of Jupiter, FL	Utility Billing and Enterprise Assessment Management Software Selection	May 2012 – Nov 2012
City of Hallandale Beach, FL	ERP Selection	May 2012 – Present
City of Columbia, MO	ERP Needs Assessment and Selection	May 2012 – Present
Livingston County, MI	ERP Selection and Implementation Management Assistance	May 2012 – Present
Horry County, SC	ERP Needs Assessment and Selection	Feb 2012 – Present
City of Oakland Park, FL	ERP Selection	Feb 2012 – Jan 2013
City of Cooper City, FL	ERP Selection	Feb 2012 – Oct 2012
Marin County, CA	ERP Operations Review	Feb 2012 – Present
City of Greenville, NC	ERP Selection	Dec 2011 – Present
Hampton Roads Sanitation District, VA	ERP Needs Assessment and Selection	Jan 2012 – Present
City of East Lansing, MI	ERP Needs Assessment	Dec 2011 – Aug 2012
Broward County, FL	ERP Selection Assistance	July 2011 – Present
City of North Miami Beach, FL	ERP Needs Assessment and System Selection	Apr 2011 – Present
City of Chandler, AZ	Oracle Upgrade Project Management Services	Mar 2011 – Nov 2011
Town of Jupiter, FL	Financial Management System Selection and Implementation Management Assistance	Mar 2011 – Nov 2012
City of Flagstaff, AZ	ERP Due Diligence Assistance	Jan 2011 – Aug 2011
Muskegon County, MI	FMIS Software Selection and Implementation Management Assistance	Jan 2011 – Present
City of Owensboro, KY	ERP Selection	Nov 2010 – Dec 2011

Client Name	Project Title	Project Date
City of Asheville, NC	Development Services Software Selection	Oct 2010 – Sep 2011
City of Casper, WY	Software System Assessment	Aug 2010 – Aug 2011
City of Alexandria, VA	ERP Needs Assessment and Selection	Aug 2010 – June 2011
Borough of State College, PA	ERP Selection, Contract Negotiations and Implementation Management Assistance	Jul 2010 – Present
City of Miramar, FL	ERP Selection and Implementation Management Assistance	May 2010 – Jul 2012
City of Roswell, GA	ERP Selection, Contract Negotiations and Implementation Management Assistance	Jan 2010 – Present
Town of Hempstead, NY	Tax System Selection and Implementation Mgt.	Jun 2009 – Present
City of Mesa, AZ	ERP Selection and Implementation Management Assistance	Apr 2009 – Aug 2012
Cook County Public Guardian, IL	System Assessment and Selection	Apr 2009 – Present
Village of Mt. Prospect, IL	ERP Selection and Contract Negotiations	May 2009 – Dec 2009
Mid-America Regional Council (MARC)	ERP Selection and Contract Negotiations	Mar 2009 – Dec 2009
City of St. Charles, MO	ERP Selection and Contract Negotiations	Jan 2009 – Dec 2009
Waukesha County, WI	Financial Applications Analysis Study and RFP Development	May 2008 – Mar 2011
City of Asheville, NC	ERP Selection and Implementation Management	Oct 2007 – Dec 2010
St. Louis County, MO	ERP Selection and Implementation Management	Apr 2007 – Feb 2010
City of Sheboygan, WI	ERP Selection and Implementation Management	Mar 2007 – Dec 2008
City of St. Clair Shores, MI	Time and Attendance Software Selection	2007
City of Elgin, IL	FMIS Software Selection Assistance	Jun 2006 – May 2007
City of Cleveland, OH	FMIS Selection and Implementation Management	Oct 2006 – Feb 2010
City of Livonia, MI	Financial System Upgrade Implementation Management Assistance	2006 - 2008
Shelby Township, MI	ERP Selection and Implementation Management Assistance	2006 - 2008
Hancock County, OH	ERP Selection and Contract Negotiations	Jan 2004 – Dec 2004
City of Kalamazoo, MI	ERP Software Selection	2004 - 2005
Dane County, WI	FMIS Software Selection	Sep 2003 – Jan 2004

Company Principals

Plante Moran is guided by our philosophy that is based on certain core values and perhaps best expressed in condensed form by the Golden Rule: "Do unto others as you would have others do unto you." It is symbolized by the Plante Moran gold ruler and implied in the Plante Moran motto: "We care." We care about our clients, we care about our work, we care about our families and our communities, and we care about each other.

Although the Plante Moran philosophy can be summarized by the Golden Rule, it is composed of many principles, such as those in our Statement of Principles, namely: service, ethics, recruitment, compensation, individual progress, advancement, teamwork, delegation, education, leadership, individual freedom, communication, decision making, the common good, and balance.

These important principles include fairness; doing everything reasonable for the individual up to the point of harming the team; helping the individual to become all that he or she is capable of becoming; optimizing, rather than maximizing, or financial success; and doing what is right for the right reasons, with major emphasis on the long-range consequences of our decisions.

Although we will continue to expand and refine the principles embodied in the Plante Moran philosophy, our emphasis will be on communicating, exemplifying, and living the Golden Rule day in and day out.

Capabilities

Plante Moran takes great pride in the quality of services it provides to its clients. We have a rigorous set of quality controls designed to provide assurance that professional standards are followed and our clients receive a high quality product. The following characteristics provided our credentials to deliver IT services to the City:

- ***Longevity of Practice***: As a firm, we have over 30 years' experience in assisting clients in conducting IT projects for all areas of governmental operations including Financials, Human Resources / Payroll, Utility Billing, Community Services, Tax and Public Safety.
- ***Experienced Project Team:*** Our project team has significant and recent experience in performing similar work for other governmental clients. We generally have approximately 15 – 20 projects going on at any one time which allows our consultants to maintain currency related to all facets and phases of a variety of IT projects.
- ***Involvement in Complex IT Projects***: We have significant experience in working with ERP solution providers whose solution set involves a complexity of software solutions to meet the entire needs of a large organization. This has translated to involvement in working with clients and the selected vendor in negotiating complex contracts and statements of work. More recently, this has included involvement with clients who are intending to have their entire ERP Solution provided via Managed Services in which Managed Services options have significant variability in what can be provided.
- ***Completeness of IT Expertise***: As a full-service consulting and accounting firm, we have both depth and breadth in the types of IT services that we can provide within a single firm. We are able to provide the following set of complementary services that are frequently viewed by our clients as value-add:
    - Chart of Accounts development
    - Business process redesign

- Internal controls
- Security
- IT staff assessments to assist clients in understanding the degree to which their IT organizations have the needed skills and certifications to support a new ERP environment
- Organizational assessments to assist clients in restructuring their organization including staff roles and responsibilities
- Change management services to assist client staff in the transition from legacy technologies and business processes to more current technology and redesigned business processes
- Application controls reviews
- Disaster recovery planning

- ***Vendor Marketplace Knowledge:*** We have extensive knowledge of the ERP software vendor marketplace and system integrator marketplace for those vendors that will be likely providers of software and services to the City. This experience has been gained through a number of activities including work with other clients in selecting and implementing ERP solutions, participation in conferences in which ERP vendors are participating (e.g., GFOA annual conference) and proactive meetings with ERP vendors to understand their latest product and service offerings to governmental clients. For example, over the last several months we have had meetings and/or phone calls with the following vendors to discuss aspects of the current and future plans related to their ERP products and services including:
  - Sungard (on-site meeting in January 2013)
  - Oracle (on-site meeting in December 2012)
  - Microsoft (discussions related to their Dynamics AX product)
  - Workday (conference calls and participation in webinars)
  - Agresso (on-site meeting scheduled for February 2013)
  - Infor (on-site meeting scheduled for February/March 2013)
  - Springbrook (series of conference calls to discuss their current and future plans)
  - New World Systems (meeting at their location)
  - Tyler Technologies (on-going involvement with them related to recent selection initiatives)
- ***Tools, Templates and Methods:*** We have developed a vast repository of tools, templates and methods that provide significant value and stream-lining to IT projects while ensuring that the integrity and thoroughness of the process is maintained.
- ***Independence:*** We are completely independent from all providers of IT solutions and system integrators. As a result, we will be working with the City to select a Solution that provides the best overall value to the City and its stakeholders.
- ***Best Practice Identification:*** We have extensive knowledge of IT-related best practices through involvement in numerous software selection and implementation projects for other governmental clients. Through these projects and through our involvement in governmental operations reviews, we have developed a set of best practices related to execution of the various functional areas including Financial, Human Capital Management and Supply Chain.
- ***Client Retention:*** The biggest testament to our capabilities and project staff is the desire for our clients to continue using our services after an initial assessment/selection or other

technology-related project. In our client references section, we highlight such clients including those that have used our services in multiple instances due to the high degree of satisfaction with the quality of our services and our staff.

Company Organization

Plante Moran, PLLC is a limited partnership, owned and operated by its partners. Plante Moran has over 2,000 staff firm-wide performing Management Consulting, Assurance and Tax services to clients throughout the U.S. with additional clients around the globe. Our Management Consulting practice area, which will perform the services requested by the City of Fayetteville consists of:

- Over 175 staff and partners
- 17 of which are dedicated to serving governmental clients across the U.S.

We have provided and are currently providing implementation management services to a number of municipal clients. All of our office locations are listed below.

Illinois

Chicago
225 W. Washington Street
Suite 2700
Chicago, IL 60606

Northwest Chicago
2155 Point Boulevard
Suite 200
Elgin, IL 60123

Michigan

Ann Arbor
1000 Oakbrook Dr.
Suite 400
Ann Arbor, MI 48104

Auburn Hills
2601 Cambridge Court
Suite 500
Auburn Hills MI 48326 ,

Detroit
7310 Woodward Ave.
Suite 740
Detroit, MI 48202

East Lansing
1111 Michigan Avenue
East Lansing, MI 48823

Flint
111 E. Court St
Suite 1A
Flint, MI 48502-1647

Grand Rapids
634 Front Avenue NW
Suite 400
Grand Rapids, MI 49504

Kalamazoo
750 Trade Centre Way
Portage, MI 49002

Macomb
19176 Hall Road
Suite 300
Clinton Township, MI 48038

St. Joseph
511 Renaissance Drive
Suite 120
St. Joseph, MI 49085

Southfield
27400 Northwestern Highway
Southfield, MI 48034

Southfield (East Office)
26300 Northwestern Highway
Suite 120
Southfield, MI 48076

Traverse City
600 E. Front Street
Suite 300
Traverse City, MI 49686

Ohio

Cincinnati
537 E. Pete Rose Way
Cincinnati, OH 45202

Cleveland
1111 Superior Ave
Suite 1250
Cleveland, OH 44114

Columbus
65 E. State Street
Suite 600
Columbus, OH 43215

Toledo
3434 Granite Circle
Toledo, OH 43617

5. Personnel

Our staffing approach is designed to assign personnel to areas of the project where their expertise is required. All of the proposed team members have worked together on a number of engagements for municipal clients. Communication, involvement and teamwork characterize our management philosophy and are extremely important on this project internally and with the City.

Overall, we are offering the City an experienced project management and information technology director, Mr. Dale Vanderford. Mr. Vanderford has served as IT Director for Washtenaw County, a county of about 300,000 people during a time of tremendous growth and change and as the Infrastructure Manager in the City of Ann Arbor during the New World Systems ERP Implementation. In addition, we will make available an additional pool of IT professionals to assist in related technical matters, such as security, infrastructure, communications, etc, on an as needed basis at the discretion of your management team. With this management orientation, we believe that all project tasks can be effectively achieved and any issues or problems can be resolved effectively and expediently, resulting in the successful accomplishment of the project objectives. In addition, we assure that all team members will be available for the duration of the project, as need be. All of the consultants identified in this proposal are employees of Plante Moran.

Team Member	Project Role and Responsibility	Relevant References
Adam Rujan Partner Plante & Moran, PLLC Services Exp: 25 yrs	**Project Director** Overall responsibilities for ensuring that engagement with City remains within schedule and budget and that all project deliverables meet the required quality standards.	City of Cleveland, OH City of Alexandria, VA St. Louis County, MO City of Asheville, NC City of Round Rock, TX County of Chester, PA City of Fayetteville, AR
Dale Vanderford Manager Plante & Moran, PLLC	**Project Manager** Responsible for leading City technology initiatives and providing professional services for any projects specified by the City during the contract period. Dale will act as the primary day to day contract manager for the City.	Muskegon, MI Ottawa County , MI Broward County, FL Horry County, SC City of Carlsbad, CA Colorado Springs, CO

Dale Vanderford

Manager
Technology Consulting & Solutions

EXPERIENCES INCLUDE:

Mid-size IT Department Management: Served as Director at Washtenaw County, MI, where he directed the work of 30 IT Professionals and managed the needs of 26 disparate County departments. He coordinated a shared services initiative where sharing of services, including outsourced desktop support to other local units of government,, a shared Electronic Content Management System, surveillance camera system, and data center with the City of Ann Arbor, MI were all enacted. Improved the Governance process for IT, so that all technology projects were submitted to a governance board for approval and prioritization, and all projects had a complete Return on Investment/Total Costs of Ownership evaluation performed on them.

IT Organizational Assessment and Strategic Planning: Experience in analyzing IT organizational staffing, process and technology relationships. Knowledge of best in class public sector transaction detail and staffing levels. Expertise in identifying opportunities to enhance current policy and procedure to maximize existing staff expertise or technology infrastructure. Performed Technology reviews in several cities and counties, including Colorado Springs, Colorado, Horry County, SC, Macomb County, MI, and Carlsbad, CA.

IT Governance Review: Expertise in analyzing and designing organizational IT governance, specifically post implementation system support structures.

Business Process Documentation and Reengineering: Experience in documenting as-is business processes and identifying areas for business process improvement. Specialization in implementing a results based budget methodology. Experience in implementing change management techniques to ensure user acceptance of new business processes and/or technology.

New Construction Technology Engineering and Implementation: Oversaw the technology design and implementation of 9 new facilities, ranging from office buildings to detention facilities to data centers. Planned the initial IT and Telecom needs for the new building with users and architects. Worked with construction personnel to design building wiring systems and to design IT closet locations throughout the building. Planned and implemented technology equipment installation and coordinated facility move in.

Software Needs Assessment: Specialization in analyzing the business case for enterprise system improvement or replacement. Experience in facilitating functional area process discussions and identifying opportunities for technology to enable business process improvement. Extensive knowledge of the public sector enterprise system marketplace and intimate knowledge in regard to viable enterprise solutions.

System Selection: Experience in the process of selecting and deploying enterprise systems. Developed technology specifications for inclusion in public sector request for proposal for enterprise systems. Extensive experience in vendor proposal analysis and demonstration script development. Has participated in the system selection process of multiple ERP, ECM, cloud-based security and email, Access Control, SAN, and consulting services.

Technology Implementation Management: Provided implementation management services associated with deployment of newly selected systems. Activities have included, project planning, review of project deliverables, management of the project issues, facilitation of project status review, review and approval of project invoicing and others as dictated by the project. Specifically, managed the technical implementation of New World .NET product, as well as the installation and expansion of the Hyland OnBase Document management system and several Email upgrades of Microsoft Exchange.

Cross Boundary Collaboration: Architected and implemented partnership of multiple local units of governments in regards to Information Technology staffing, resources, and infrastructure utilization cooperation agreements.

EDUCATION:

Eastern Michigan University — Bachelor of Science, Communications Technology

PROFESSIONAL AFFILIATIONS AND CERTIFICATIONS:

- Specialized Training: Effective Communications and Human Relations, Dale Carnegie, Ann Arbor, MI, 2006
- Former Board Member, Washtenaw County Homeland Security Local Response Team
- Member, CIO Council, Public Technology Institute, Washington, D.C.
- Board of Directors, Washtenaw County/EMU Legal Resource Center, Ann Arbor, MI
- Member, Metropolitan Information Exchange

PRIOR ORGANIZATIONAL AFFILIATIONS:

Washtenaw County, MI – Director of Technology and Operations

Directed the operations of the Technology Department to support efficient and effective service delivery for a county government with 1,300 employees and a $200 million annual budget, serving 340,000 residents. Developed and implemented the 5-year Technology Plan which supported the County's strategic direction by providing technical knowledge, skills, and resources to enhance the ability of internal and external customers to create a positive impact in the community. Hired, trained, and led a team of 34 employees (management, technical, and administrative staff), with an $9 million annual operating budget, to effectively implement the Plan. Key areas of focus included:

- Employee Help Desk and System Support
- Application and Database Support
- Network Administration
- Voice and Data Communications
- Geographic Information Systems
- IT Services to Local Governments and Community Residents

KEY CLIENTS:

- City of Colorado Springs, CO
- Borough of State College, PA
- City of Carlsbad, CA
- County of Ottawa, MI
- County of Muskegon, MI
- City of Hallandale Beach, FL
- County of Macomb, MI
- County of Broward, FL
- County of Horry, SC
- City of Columbia, MO
- City of Colorado Springs, CO
- Numerous projects as IT Director for Washtenaw County

NOTABLE PROJECTS:

- ***City of Colorado Springs, CO:*** Dale served as a lead project consultant to assist the City during the process of performing a complete IT Assessment and staffing plan for the city. The result of the work that Dale did was a staffing plan that provided for a realignment of resources to be able to provide better service with the same amount of staff. The other focus of the IT Assessment was on the IT service portfolio, cost of IT services, benchmarking with other governmental and private sector organizations and a determination of strategic sourcing options.
- **Muskegon County, MI:** Dale performed a needs analysis with the County's departments to determine the County's approach and process to transition from a legacy Document Management system. He worked with the County to determine present and future needs and to assist with the procurement process through a staeering committee. Subsequently, he is working with the County to finalize project plans and to assist in contract negotiation.
- ***City of Carlsbad, CA:*** Dale served as a lead project consultant to assist the City in a complete IT assessment of the services that was offering the organization and its citizens and worked with the team to develop a cost of IT services for the city to help in determining what multiple services actually cost the City to deliver.
- ***Macomb County, MI:*** Dale served as the Project Manager and Lead consultant on an IT assessment that assessed the skill levels of staff, the services that IT was delivering to the county, the state of the infrastructure that was deployed in the county after the departure of the IT Director. The result was a streamlined department that is able to server the staff and constituents in a more productive and effective way.
- ***Ottawa County, MI:*** Dale served as the Project Manager on this IT Assessment and Strategic Plan development project that examined the current department technologies process and staffing and provided a 5-year technology plan that will enable the department to embrace the current trends in technology and those that are still evolving. The engagement also included an assessment of the current technologies in use as well as an analysis of the opportunities available for collaboration with other entities such as other cities, townships, villages, and school districts.

6. Appendix A – Terms and Conditions

Professional Services Agreement – Consulting Services
Addendum to Plante & Moran, PLLC Engagement Agreement Dated <Date>

This Professional Services Agreement is part of the engagement agreement for our consulting services dated <Date> between Plante & Moran, PLLC (referred to herein as "P&M", "we", "our" or "us") and City of Fayetteville (referred to herein as "the City", "you" and "your").

1. **Management Responsibilities** – The consulting services we will provide are inherently advisory in nature. We have no responsibility for any management decisions or management functions in connection with our engagement to provide these services. Further, you acknowledge that the City is responsible for all such management decisions and management functions; for evaluating the adequacy and results of the services we will provide and accepting responsibility for the results of those services; and for establishing and maintaining internal controls, including monitoring ongoing activities, in connection with our engagement. You have designated <Designated Project Supervisor, Title> to oversee the services we will provide.

2. **Nature of Services** – Our project activities will be based on information and records provided to us by the City. We will rely on such underlying information and records and our project activities will not include audit or verification of the information and records provided to us in connection with our project activities.

   The project activities we will perform will not constitute an examination or audit of any the City financial statements or any other items, including the City's internal controls. This engagement also will not include preparation or review of any tax returns or consulting regarding tax matters. If you require financial statements or other financial information for third-party use, or if you require tax preparation or consulting services, a separate engagement letter will be required. Accordingly, you agree not to associate or make reference to P&M in connection with any financial statements or other financial information of the City. In addition, our engagement is not designed and cannot be relied upon to disclose errors, fraud or illegal acts that may exist. However, we will inform you of any such matters that come to our attention.

3. **Use of Report** – At the conclusion of our project activities, we will provide you with a written report as described in the engagement agreement. Our report will be restricted solely to use by management of the City and you agree that our report will not be distributed to any outside parties for any purpose other than to carry out legal responsibilities of the City. We will have no responsibility to update our report for any events or circumstances that occur or become known subsequent to the date of that report.

4. **Confidentiality, Ownership and Retention of Workpapers** – During the course of this engagement, P&M and P&M staff may have access to proprietary information of the City, including, but not limited to, information regarding trade secrets, business methods, plans, or projects. We acknowledge that such information, regardless of its form, is confidential and proprietary to the City, and we will not use such information for any purpose other than our consulting engagement or disclose such information to any other person or entity without the prior written consent of the City.

   In some circumstances, we may use local or international third-party service providers or P&M affiliates to assist us with our engagement. In order to enable these service providers to assist us in this capacity, we must disclose information to these service providers that is relevant to the services they provide. Disclosure of such information shall not constitute a breach of the provisions of this agreement.

In the interest of facilitating our services to you, we may communicate or exchange data by internet, e-mail, facsimile transmission or other methods. While we use our best efforts to keep such communications and transmissions secure in accordance with our obligations under applicable laws and professional standards, you recognize and accept that we have no control over the unauthorized interception of these communications or transmissions once they have been sent, and consent to our use of these electronic devices during this engagement.

Professional standards require that we create and retain certain workpapers for engagements of this nature. All workpapers created in the course of this engagement are and shall remain the property of P&M. We will maintain the confidentiality of all such workpapers as long as they remain in our possession.

Both the City and P&M acknowledge, however, that we may be required to make our workpapers available to regulatory authorities or by court order or subpoena. Disclosure of confidential information in accordance with requirements of regulatory authorities or pursuant to court order or subpoena shall not constitute a breach of the provisions of this agreement. In the event that a request for any confidential information or workpapers covered by this agreement is made by regulatory authorities or pursuant to a court order or subpoena, we agree to inform the City in a timely manner of such request and to cooperate with the City should you attempt, at your cost, to limit such access. This provision will survive the termination of this agreement.

We reserve the right to destroy, and it is understood that we will destroy, workpapers created in the course of this engagement in accordance with our record retention and destruction policies, which are designed to meet all relevant regulatory requirements for retention of workpapers. P&M has no obligation to maintain workpapers other than for its own purposes or to meet those regulatory requirements.

Upon the City's written request, we may, at our sole discretion, allow others to view any workpapers remaining in our possession if there is a specific business purpose for such a review. We will evaluate each written request independently. You acknowledge and agree that we will have no obligation to provide such access or to provide copies of our workpapers, without regard to whether access had been granted with respect to any prior requests.

5. **Fee Estimates –** In any circumstance where we have provided estimated fees, fixed fees or not to exceed fees, these estimated, fixed or not-to-exceed fees are based on the City personnel providing P&M staff the assistance necessary to satisfy the City responsibilities under the scope of services. This assistance includes availability and cooperation of those the City personnel relevant to our project activities and providing needed information to us in a timely and orderly manner. In the event that undisclosed or unforeseeable facts regarding these matters causes the actual work required for this engagement to vary from our estimates, our estimated fees will be adjusted for the additional time we incur as a result.

   In any circumstance where our work is rescheduled, we offer no guarantee, express or implied, that we will be able to meet any previously established deadline related to the completion of our work. Because rescheduling our work imposes additional costs on us, in any circumstance where we have provided estimated fees, those estimated fees may be adjusted for additional time we incur as a result of rescheduling our work.

   Any fee adjustments will be determined in accordance with the Fee Adjustments provision of this agreement.

6. **Payment Terms –** Our invoices for professional services are due upon receipt unless otherwise specified in our engagement letter. In the event any of our invoices are not paid in accordance with the terms of this agreement, we may elect, at our sole discretion, to suspend work until we receive payment in full for all amounts due or terminate this engagement. In the event that work is suspended, for nonpayment or other reasons, and subsequently resumed, we offer no guarantee, express or implied, that we will be able to meet any previously established deadlines related to the

completion of our consulting work or issuance of our consulting report upon resumption of our work.

7. **Fee Adjustments –** Any fee adjustments for reasons described in this agreement will be determined based on the actual time that P&M staff expends at the hourly rates stated in this agreement, plus all reasonable and necessary travel and out-of-pocket costs incurred, and included as an adjustment to our invoices related to this engagement. You acknowledge and agree that payment for all such fee adjustments will be made in accordance with the payment terms provided in this agreement.

8. **Termination of Engagement –**This agreement may be terminated by either party upon written notice. Upon notification of termination, our services will cease and our engagement will be deemed to have been completed. You will be obligated to compensate us for all time expended and to reimburse us for all out-of-pocket expenditures through the date of termination of this engagement.

9. **Hold Harmless and Indemnification** - As a condition of this engagement, City of Fayetteville agrees to hold P&M, and all of its partners and staff, harmless against any losses, claims, damages, or liabilities, to which P&M may become subject in connection with services performed in the engagement, unless a court having jurisdiction shall have determined in a final judgment that such loss, claim, damage, or liability resulted primarily from the willful misconduct or gross negligence of P&M, or one of its partners or staff. This hold harmless includes the agreement to reimburse P&M for any legal or other expenses incurred by P&M, as incurred, in connection with investigating or defending any such losses, claims, damages, or liabilities. This provision shall survive any termination of this engagement.

10. **Conflicts of Interest** - Our engagement acceptance procedures include a check as to whether any conflicts of interest exists that would prevent our acceptance of this engagement. No such conflicts have been identified. You understand and acknowledge that P&M may be engaged to provide professional services, now or in the future, unrelated to this engagement to parties whose interests may not be consistent with yours.

11. **Agreement Not to Influence –** the City and P&M each agree that each respective organization and its employees will not endeavor to influence the other's employees to seek any employment or other contractual arrangement with it, during this engagement or for a period of one year after termination of the engagement. the City agrees that P&M employees are not "contract for hire." P&M may release the City from these restrictions if the City agrees to reimburse P&M for its recruiting, training, and administrative investment in the applicable employee. In such event, the reimbursement amount shall be equal to two hundred hours of billings at the hourly rate stated in this agreement for the P&M employee.

12. **Governing Law –** This agreement shall be governed by and construed in accordance with the laws of the State of Michigan.

End of Professional Services Agreement – Consulting Services

7. Appendix B – Forms

Fayetteville
ARKANSAS

City of Fayetteville, Arkansas
Purchasing Division – Room 306
113 W. Mountain
Fayetteville, AR 72701
Phone: 479.575.8220
TDD (Telecommunication Device for the Deaf): 479.521.1316

RFP (REQUEST FOR PROPOSAL)

REQUEST FOR PROPOSAL: RFP 13-16, IT Support Services
DEADLINE: Friday, November 01, 2013 before 2:00:00 PM, local time
RFP DELIVERY LOCATION: Room 306 – 113 W. Mountain, Fayetteville, AR 72701
PURCHASING AGENT: Andrea Foren, CPPO, CPPB, aforen@ci.fayetteville.ar.us
DATE OF ISSUE AND ADVERTISEMENT: Tuesday, October 15, 2013

REQUEST FOR PROPOSAL
RFP 13-16, IT Support Services

No late proposals shall be accepted. RFP's shall be submitted in sealed envelopes labeled with the project number and name as well as the name and address of the firm.

All proposals shall be submitted in accordance with the attached City of Fayetteville specifications and bid documents attached hereto. Each Proposer is required to fill in every blank and shall supply all information requested; failure to do so may be used as basis of rejection. Any bid, proposal, or statements of qualification will be rejected that violates or conflicts with state, local, or federal laws, ordinances, or policies.

The undersigned hereby offers to furnish & deliver the articles or services as specified, at the prices & terms stated herein, and in strict accordance with the specifications and general conditions of submitting, all of which are made a part of this offer. This offer is not subject to withdrawal unless upon mutual written agreement by the Proposer/Bidder and City Purchasing Agent.

Name of Firm: Plante & Moran, PLLC

Contact Person: Adam Rujan Title: Partner

E-Mail: adam.rujan@plantemoran.com Phone: 800.544.0203

Business Address: 27400 Northwestern Hwy

City: Southfield State: MI Zip: 48034

Signature: Date: October 31, 2013

City of Fayetteville
RFP 13-16, IT Support Services
SECTION E: Signature Submittal

1. Disclosure Information

Proposer must disclose any possible conflict of interest with the City of Fayetteville, including, but not limited to, any relationship with any City of Fayetteville employee. Proposer response must disclose if a known relationship exists between any principal or employee of your firm and any City of Fayetteville employee or elected City of Fayetteville official.

If, to your knowledge, no relationship exists, this should also be stated in your response. Failure to disclose such a relationship may result in cancellation of a purchase and/or contract as a result of your response. This form must be completed and returned in order for your bid/proposal to be eligible for consideration.

PLEASE CHECK ONE OF THE FOLLOWING TWO OPTIONS, AS IT APPROPRIATELY APPLIES TO YOUR FIRM:

___X___ 1) NO KNOWN RELATIONSHIP EXISTS

_____ 2) RELATIONSHIP EXISTS (Please explain): _____

I certify that; as an officer of this organization, or per the attached letter of authorization, am duly authorized to certify the information provided herein are accurate and true; and my organization shall comply with all State and Federal Equal Opportunity and Non-Discrimination requirements and conditions of employment.

2. At the discretion of the City, one or more firms may be asked for more detailed information before final ranking of the firms, which may also include oral interviews. NOTE: Each Proposer shall submit to the City a primary contact name, e-mail address, and phone number (preferably a cell phone number) where the City selection committee can call for clarification or interview via telephone.

Name of Firm: **Plante & Moran, PLLC**

Name of Primary Contact: **Adam Rujan**

Title of Primary Contact: **Partner**

Phone#1 (cell preferred): **248.891.0430** Phone#2: **248.223.3328**

E-Mail Address: **adam.rujan@plantemoran.com**

3. Please acknowledge receipt of addenda for this invitation to bid, request for proposal, or request for qualification by signing and dating below. All addendums are hereby made a part of the bid or RFP documents to the same extent as though it were originally included therein. Proposers/Bidders should indicate their receipt of same in the appropriate blank listed herein. Failure to do so may subject vendor to disqualification.

ADDENDUM NO.	SIGNATURE AND PRINTED NAME	DATE ACKNOWLEDGED

4. PRICE BID: Firm proposes the following all inclusive hourly rate. Rate includes all expenses to the city including but not limited to services, travel, overhead, re-location, etc. The City shall not pay additional fees outside of contracted hourly rate for the services listed in this RFP. In the event of contract extension or renewal, the number of hours will be increased.

Item	Description	Estimated Quantity (# hours in 6 months)	Proposed Hourly Rate		Total Fee for 6 months
1	IT Services as described	520	x $ 195.00	=	$ 101,400.00

5. As an interested party on this project, you are required to provide debarment/suspension certification indicating in compliance with the below Federal Executive Order. Certification can be done by completing and signing this form.

Federal Executive Order (E.O.) 12549 "Debarment and Suspension" requires that all contractors receiving individual awards, using federal funds, and all sub-recipients certify that the organization and its principals are not debarred, suspended, proposed for debarment, declared ineligible, or voluntarily excluded by any Federal department or agency from doing business with the Federal Government.

6. Signature certifies that neither you nor your principal is presently debarred, suspended, proposed for debarment, declared ineligible, or voluntarily excluded from participation in this transaction by any federal department or agency.

Questions regarding this form should be directed to the City of Fayetteville Purchasing Division.

NAME: Adam Rujan

COMPANY: Plante & Moran, PLLC

PHYSICAL ADDRESS: 27400 Northwestern Hwy., Southfield, MI 48034

MAILING ADDRESS: 27400 Northwestern Hwy., Southfield, MI 48034

PHONE: 800.544.0203 FAX: 248.233.8587

E-MAIL: adam.rujan@plantemoran.com

SIGNATURE:

TITLE: Partner

DATE: October 31, 2013

{Thank You!}

plante moran

For more information contact:

Adam Rujan, Partner
800.544.0203
Adam.rujan@plantemoran.com

plantemoran.com

Plante and Moran, PLLC
Plante & Moran, PLLC
27400 Northwestern Highway
P.O. Box 307
Southfield, MI 48037-0307
Tel: 248.352.2500
Fax: 248.352.0018
plantemoran.com

RECEIVED
JUL 1 2014
CITY OF FAYETTEVILLE
MAYOR'S OFFICE

June 30, 2014

Don Marr
Chief of Staff, City of Fayetteville, AR
113 West Mountain Street
Fayetteville, AR 72701

Dear Don:

Thank you for the opportunity to allowing us to discuss with you the proposed changes in scope to our engagement for Project Management and Program Support. We are pleased to present our proposal amendment to assist the City of Fayetteville or the "City" in filling the staffing need to assist you in getting through the planning/budget process and to further implementing IT projects and additional organizational changes.

PROJECT BACKGROUND

In October of 2013, Plante Moran responded to and was subsequently awarded the bid for RFP 13-16, "Proposal to Provide IT Services". The contract was executed on January 7, 2014 as City Council resolution number 2013-0242 and IT services commenced at the end of January. Since the engagement initiation, Plante Moran staff have worked with the City to initiate and/or complete many projects for the city, including the conversion from GroupWise email to Office 365, replacement of the AS/400, the filling of a DBA vacancy to continue critical project work, authoring of several new IT policies and procedures, development of a Request for Proposal to replace the City's content management system , as well as the awarding of that contract and subsequent negotiations.

However, there still remains much to do. The Content Management System project will soon be beginning and needs project oversight, as well as the Database Cluster Replacement, Disaster Recovery Plan Re-Redevelopment, ERP readiness, GIS Database Upgrade, and the institution of additional processes and procedures to help instil a management structure for the department based on metrics and data. In addition to the project work there is a need for the continued development of processes and procedures for the City's IT operations.

PROJECT SCOPE AND PROPOSED WORK PLAN

Scope of Services:

Project Management staffing

Plante Moran will furnish one consultant for an additional amount of 546 hours from the last part of June through December 2014. The breakdown in hours is as estimated as follows:

Week	Estimated Hours
23-Jun	42
7-Jul	42
28-Jul	42
11-Aug	42
25-Aug	42
8-Sep	42
22-Sep	42
6-Oct	42
20-Oct	42
3-Nov	42
17-Nov	42
1-Dec	42
15-Dec	42
Cumulative Hours	546
Estimated Additional Budget Required	**$ 106,470**

The majority of this time will be spent on-site with the City, with ancillary hours spent off-site as needed to monitor operations and project progress.

PROFESSIONAL SERVICES FEES

Our fees for providing assistance to the City of Fayetteville, AR will not exceed $106,470 for all of the staff time spent on services related to the Project Management project, inclusive of any expenses incurred.

Fees associated with any potential changes to our scope of services and/or other optional assistance as deemed necessary by the City, or future phases to be determined, can be provided at your request at a later date and will not be billed until formally approved, separately, by the City of Fayetteville.

Don Marr, Chief of Staff
City of Fayetteville

We appreciate the opportunity to be of continued service to the City. If you agree with the terms of this engagement as described in this letter, please sign the enclosed copy and return it to us via email at dale.vanderford@plantemoran.com. If you have any questions regarding this proposal, please do not hesitate to contact Dale Vanderford or Scott Eiler at 800.544.0203.

All terms and conditions agreed to in the contract executed January 7, 2014 and are specifically related to the duties and obligations set forth in RFP 13-16.

Very truly yours,
Plante & Moran, PLLC

E. Scott Eiler

Scott Eiler

ACCEPTED:

_____

LIONELD JORDAN, Mayor

ATTEST:

_____

Sondra E. Smith,
City Clerk/Treasurer

City of Fayetteville Staff Review Form

2014-0272

Legistar File ID

7/15/2014

City Council Meeting Date - Agenda Item Only
N/A for Non-Agenda Item

Fritz Gisler	6/20/2014	Government Channel / Communications & Marketing Department
Submitted By	**Submitted Date**	**Division / Department**

Action Recommendation:

Recognize $4,000 in revenue from Public Access Television fees to pay for promotional activities for Public Access Television, and approve a budget adjustment.

Budget Impact:

1010.0600.5342.00	1010 - General
Account Number	Fund
51022.1101	Public Access Television Fees
Project Number	Project Title

Budgeted Item?	Yes	Current Budget	$	758.00
		Funds Obligated	$	-
		Current Balance	**$**	**758.00**
Does item have a cost?	No	Item Cost	$	-
Budget Adjustment Attached?	Yes	Budget Adjustment	$	4,000.00
		Remaining Budget	**$**	**4,758.00**

V20140610

Previous Ordinance or Resolution # _____

Original Contract Number: _____ Approval Date: _____

Comments: A budget adjustment will move $4,000.00 from Public Access TV Fees revenue account to the Media Services Promotional Activities account to pay for promotional activities for Public Access Television.

6/24/14

Marsha Hartsock 6/24/14

Don Marr 6/24/14

LOGGED 6/24/14

ENTERED 6/24/14

CITY OF Fayetteville ARKANSAS

STAFF MEMO

TO: City Council

THRU: Lindsley Smith, Director of Communications

FROM: Fritz Gisler, Director of Media Services

DATE: July 1, 2014

SUBJECT: **Receipt of Public Access Fees**

RECOMMENDATION:
Recognize revenue from Public Access activity and approve a budget adjustment to allow expenditure for the promotion of Fayetteville Public Access Television.

BACKGROUND:
As per the contract to provide Public Access Television Services to the City of Fayetteville, Your Media, Inc. charges users for certain items. These items include things like contract production, DVD duplication, tape transfers, and blank recording media. These fees are deposited into and held in a trust account until such time as the Director of Media Services determines a need to use them for the support of Public Access Television.

DISCUSSION:
The amount in the trust account has reached $4,000.00. This amount has been deposited into the Public Access Television Fees revenue account at the City. The Executive Director of Your Media and the Director of Media Services would like to transfer those funds to the Promotional Activities account of Media Services to be utilized to conduct a promotional campaign for Fayetteville Public Access Television. The goal of the campaign is to increase awareness of both the learning opportunities and the new diverse programming that are available at Fayetteville Public Access Television. Among the activities planned:

- Duplication and distribution of USB 'thumb' drives that would have the FPAT logo on them. They would contain all the forms utilized by users, orientation information, and other promotional information.
- Placement of targeted online advertising using outlets such as Google AdWords.
- Strategic use of posters, drop cards, disc cases, etc. that can carry messaging about FPAT and particular programs.
- Synergistic joint activities (TBD) in conjunction with program producers to help promote viewership.

BUDGET/STAFF IMPACT:
Approval of the Budget Adjustment will increase the Promotional Activities budget for Media Services by $4,000.00.

RESOLUTION NO. _____

A RESOLUTION TO APPROVE A BUDGET ADJUSTMENT IN THE AMOUNT OF $4,000.00 RECOGNIZING PUBLIC ACCESS TELEVISION FEE REVENUE TO BE USED FOR PROMOTIONAL ACTIVITIES

BE IT RESOLVED BY THE CITY COUNCIL OF THE CITY OF FAYETTEVILLE, ARKANSAS:

Section 1: That the City Council of the City of Fayetteville, Arkansas hereby approves a budget adjustment in the amount of $4,000.00 recognizing public access television fee revenue to be used for promotional activities. A copy of the budget adjustment is attached to this Resolution as Exhibit "A".

PASSED and **APPROVED** this 15th day of July, 2014.

APPROVED: ATTEST:

By: _____ By: _____
LIONELD JORDAN, Mayor **SONDRA E. SMITH**, City Clerk/Treasurer

City of Fayetteville, Arkansas - Budget Adjustment Form (Legistar)

Budget Year	Division:	Government Channel	Adjustment Number
2014	Dept.:	Communications & Marketing	
	Requestor:	Fritz Gisler	

BUDGET ADJUSTMENT DESCRIPTION / JUSTIFICATION:

Transfer funds from Public Access Fees revenue account to Media Services Promotional Activities account to pay for Public Access promotional activities.

COUNCIL DATE: 7/1/2014

LEGISTAR FILE ID#: **2014-0272**

Kevin Springer
6/20/2014 9:16 AM

Budget Director Date

TYPE:

DESCRIPTION:

GLDATE:

POSTED: /

RESOLUTION/ORDINANCE

v.20140619

	Increase / (Decrease)		Project.Sub#			
Account Number	Expense	Revenue	Project	Sub	AT	Account Name
TOTAL	4,000	4,000				
1010.0001.4449.00		4,000	51022	1101	RE	Public Access Television Fees
1010.0600.5342.00	4,000		51022	1101	EX	Promotional Activities
	-	-				
	-	-				
	-	-				
	-	-				
	-	-				
	-	-				
	-	-				
	-	-				
	-	-				
	-	-				
	-	-				
	-	-				

EXHIBIT A

FAYETTEVILLE

CITY OF FAYETTEVILLE

113 WEST MOUNTAIN STREET
FAYETTEVILLE, AR 72701

DATE: **6/05/2014** *RECEIPT NO.:* **140167769**

RECEIPT DESCRIPTION		AMOUNT
Misc Recpt Community Access Television	Public Access TV Fees	$ 4,000.00
Thank You!		
RECEIVED FROM Community Access Television	*TOTAL AMOUNT*	**$ 4,000.00**

ACCTG

RECEIVED BY: _____

ORIGINAL

City of Fayetteville Staff Review Form

2014-0276

Legistar File ID

7/15/2014

City Council Meeting Date - Agenda Item Only
N/A for Non-Agenda Item

Matt Mihalevich	6/23/2014	Engineering / Development Services Department
Submitted By	**Submitted Date**	**Division / Department**

Action Recommendation:

Staff recommends approval of grant agreement #2014-731 with the Walton Family Foundation in the amount of $815,000 and approval of a budget adjustment to recognize revenue. The grant funds will be used for the construction of three sections of the Town Branch Trail from Walker Park west to Interstate 49.

Budget Impact:

4470.9470.5814.05	Sales Tax Cap Imp
Account Number	Fund
02016	Trail Development
Project Number	Project Title

Budgeted Item?	Yes	Current Budget	$	3,625,008.00
		Funds Obligated	$	1,952,546.00
		Current Balance	$	1,672,462.00
Does item have a cost?	No	Item Cost	$	-
Budget Adjustment Attached?	Yes	Budget Adjustment	$	815,000.00
		Remaining Budget	$	2,487,462.00

V20140610

Previous Ordinance or Resolution # _____

Original Contract Number: _____

Approval Date: _____

ENTERED 10-23-14

ENTERED 6/24/14

Comments:

June 24, 2014

Marsha Watwood 6/24/14

6/24/14

CITY OF Fayetteville ARKANSAS

CITY COUNCIL AGENDA MEMO

MEETING OF JULY 15TH, 2014

TO: Mayor and City Council

THRU: Don Marr, Chief of Staff
Jeremy Pate, Development Services Director
Chris Brown, City Engineer

FROM: Matt Mihalevich, Trails Coordinator

DATE: June 26th, 2014

SUBJECT: **Walton Family Foundation Grant Acceptance – Town Branch Trail**

RECOMMENDATION:
Staff recommends approval of grant agreement #2014-731 with the Walton Family Foundation in the amount of $815,000 and approval of a budget adjustment to recognize this revenue. The grant funds will be used for the construction of three sections of the Town Branch Trail from Walker Park west to Interstate 49.

BACKGROUND:
The development of the Regional Park and acquisition of the Mt Kessler property has spurred an interest for completing a series of planned trails in south Fayetteville that would connect the Regional Park and Mt. Kessler properties to the Razorback Regional Greenway. On April 12th, 2014 the extension of the Frisco Trail from MLK Boulevard southward to Walker Park opened to the public allowing increased connectivity to the southern areas of Fayetteville. With this critical connection complete, the Fayetteville Alternative Transportation and Trails (FATT) Master Plan envisions a series of three trails extending to the south; the Tsa-La-Gi Trail located parallel to MLK Blvd, which is 80% completed, the Town Branch Trail that is located south of 15th Street and is partially completed and the Cato Springs Trail which follows the Cato Springs Branch and will pass over the Fulbright Expressway and under I-49 along Razorback Road. With this grant award, the City of Fayetteville will complete the Tsa-La-Gi and Town Branch Trails identified as Project 1 and divided into phases A, B and C on the attached map. The 5 year trails work plan includes these three trail connections to be designed and constructed in-house by the City's Engineering and Transportation Divisions.

DISCUSSION:
The completion of the Town Branch and Tsa-La-Gi Trails will provide the basis for the further expansion of the trail system to the Regional Park and Mt. Kessler preserve through the future construction of the Cato Springs and Shiloh Trails. The south Fayetteville trail network, once completed, will connect the entire Northwest Arkansas region to the open space amenities provided by the Mt. Kessler preserve and Regional Park via the Razorback Regional Greenway. The qualitative benefits of this extensive active transportation network will advance regional sustainability through reductions in vehicle miles travelled, increased opportunities for

community health and wellness benefits and through the exposure that people will have to the adjacent natural systems replete with flora and fauna.

BUDGET/STAFF IMPACT:
The Walton Family Foundation Grant is a 50:50 matching grant program. The City portion of the matching funds are available through the Trail Development Capital Improvement Program for 2014 and 2015. The $815,000 in grant funding will be divided into the three trail project phases as described below and shown on the attached map:

Project A – Walker Park to 71B	$325,000 (2014)
Project B – Greathouse Park to Razorback Road	$230,000 (2015)
Project C - Beechwood to Hollywood Streets	$260,000 (2015)
	$ 815,000

Attachments:
Walton Family Foundation Grant #2014-731 agreement
Map - Regional Park/Kessler Reserve Connection Trails

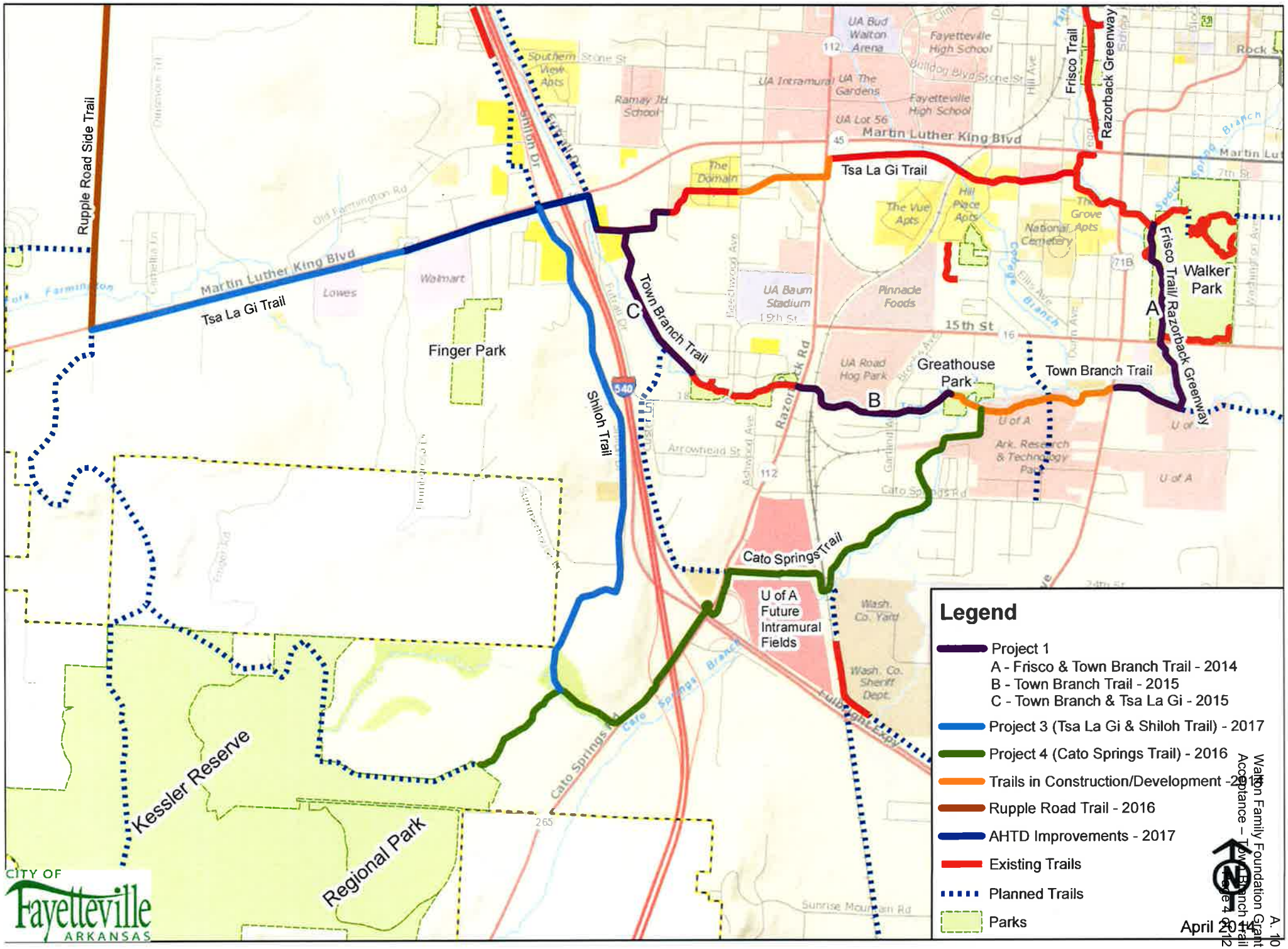

Regional Park / Kessler Reserve Connection Trails

April 2014

A. 10
Walton Family Foundation Grant
Acceptance – Town Branch Trail
Page 4 of 12

RESOLUTION NO. _____

A RESOLUTION TO EXPRESS THE CITY COUNCIL'S THANKS AND GRATITUDE TO THE WALTON FAMILY FOUNDATION FOR ITS GENEROUS $815,000.00 MATCHING GRANT FOR THE COMPLETION OF TOWN BRANCH AND TSA-LA-GI TRAILS, TO APPROVE THE GRANT AGREEMENT AND TO APPROVE A BUDGET ADJUSTMENT TO RECOGNIZE THIS $815,000.00 GRANT

WHEREAS, the Walton Family Foundation has proven to be a strong supporter of Fayetteville's trail systems including the Mount Kessler acquisition; and

WHEREAS, the Walton Family Foundation has offered a 50/50 grant in the amount of $815,000.00 for the completion of the Town Branch and Tsa-La-Gi Trails which will provide the basis for further expansion of our trail system to our Regional Park.

NOW, THEREFORE BE IT RESOLVED BY THE CITY COUNCIL OF THE CITY OF FAYETTEVILLE, ARKANSAS:

Section 1: That the City Council of the City of Fayetteville, Arkansas hereby thanks and expresses its gratitude to the Walton Family Foundation for its generous $815,000.00 matching grant for the completion of Town Branch and Tsa-La-Gi Trails, approves the attached Grant Agreement, authorizes Mayor Jordan to sign this Grant Agreement and agrees to match the grant using the Trail Development Capital Improvement Program.

Section 1: That the City Council of the City of Fayetteville, Arkansas hereby approves the attached budget adjustment.

PASSED and **APPROVED** this 15th day of July, 2014.

APPROVED: ATTEST:

By: _____ By: _____

LIONELD JORDAN, Mayor **SONDRA E. SMITH**, City Clerk/Treasurer

City of Fayetteville, Arkansas - Budget Adjustment Form (Legistar)

Budget Year	Division:	Development Services	Adjustment Number
2014	Dept.:	Development Services	
	Requestor:	Matt Mihalevich	

BUDGET ADJUSTMENT DESCRIPTION / JUSTIFICATION:

The Walton Family Foundation approved the City's application for a grant in the amount of $815,000 for the construction of the Town Branch Trail to be divided into three funding phases. This grant requires a 50:50 match with the City portion available through the Trail Development Capital Improvement Program for budget years 2014 and 2015.

Grant #2014-731

COUNCIL DATE: 7/15/2014

LEGISTAR FILE ID#: **2017-276**

Budget Director Date

TYPE:

DESCRIPTION:

GLDATE:

POSTED: /

RESOLUTION/ORDINANCE

v.20140619

	Increase / (Decrease)		Project.Sub#			
Account Number	Expense	Revenue	Project	Sub	AT	Account Name
TOTAL	815,000	815,000				
4470.0947.4305.00	-	325,000	02016	1302	RE	Commercial Grants
4470.0947.4305.00	-	230,000	02016	1403	RE	Commercial Grants
4470.0947.4305.00	-	260,000	02016	1404	RE	Commercial Grants
4470.9470.5814.05	325,000	-	02016	1302	EX	Trails
4470.9470.5814.05	230,000	-	02016	1403	EX	Trails
4470.9470.5814.05	260,000	-	02016	1404	EX	Trails
	-	-				
	-	-				
	-	-				
	-	-				
	-	-				
	-	-				
	-	-				
	-	-				
	-	-				

The
WALTON FAMILY
FOUNDATION

| P.O. Box 2030 | Bentonville | AR 72712-2030

RECEIVED
JUN 6 2014
CITY OF FAYETTEVILLE
MAYOR'S OFFICE

June 3, 2014

Mayor Lioneld Jordan
City of Fayetteville
113 W. Mountain Street
Fayetteville, AR 72701

RE: Grant #2014-731

Dear Mayor Jordan,

It is my pleasure to inform you that The Walton Family Foundation, Inc. ("WFF" - the "Foundation") has approved a grant in the amount of up to $815,000.00 to the City of Fayetteville (the "Grantee"). This grant is subject to the following terms and conditions:

1. **Purpose:** The purpose of the grant is to provide funding to complete the Tsa-La-Gi and Town Branch Trails. The successful completion of these two trails will create a key East-West Loop at the southern terminus of the Razorback Regional Greenway. This grant is more fully described in Grantee's proposal dated April 22, 2014. Grantee agrees to use all grant funds exclusively for the grant's purposes. Any changes in these purposes must be authorized in advance by the Foundation in writing.

2. **Amount: Up to Eight Hundred Fifteen Thousand Dollars ($815,000.00).**

3. **Payable:** Upon receipt of a copy of this letter acknowledging the terms and conditions set forth herein, payments in the amount of up to $815,000 shall be eligible for payment on a drawdown basis no more frequently than monthly. With each payment request, the City will submit a report outlining work completed and expenses incurred to date, as well as all paid invoices. A WFF consultant will inspect work completed for adherence to design standards as well as original budget and, upon approval, WFF will reimburse no more than 50% of paid invoices and eligible expenses, not to exceed 50% of the cost of construction, up to $815,000. All payment requests must be received no later than December 1, 2015 to be eligible for payment.

All payments shall be contingent upon the Foundation's approval of the Grantee's activities of the grant as evidenced by the reports described in paragraph 5) below and other information the Foundation may gather.

4. **Accounting:** (a) The Foundation encourages, whenever feasible, the deposit of grant funds in an interest-bearing account. For purposes of this letter, the term "grant funds" includes the grant and any income earned thereon.

(b) Grantee will maintain records of receipts and expenditures made in connection with the grant funds and will keep these records during the period covered by the Grantee's reporting obligations specified in paragraph 5 and for at least four years thereafter ("Maintenance Period"). Grantee will make its books and records in connection with the grant funds available for inspection by

the Foundation during normal business hours as the Foundation may request at any time during the Maintenance Period.

5. **Reporting and Evaluation:** Grantee will provide the Foundation with financial and narrative reports by the due dates listed in the report schedule below. Each report shall include an account of expenditures of grant funds, and a brief narrative of what was accomplished (including a description of progress made in fulfilling the purposes of the grant and a confirmation of Grantee's compliance with the terms of the grant).

Report Date	Report Type
12/15/2014	Financial & Narrative
6/30/2015	Financial & Narrative
12/31/2015	Final report - end of grant

Success will be measured against the outputs and outcomes described in Appendix A.

All reports will be sent electronically to HomeRegion@wffmail.com. Please reference Grant #2014-731 on all reports submitted.

Grantee payments are always contingent upon the Foundation's approval of Grantee's operations based on the above reports and the Foundation's satisfaction with such information as it chooses to obtain from other sources.

6. **Representations:** Grantee represents and warrants to the Foundation that:

(a) Grantee is an organization in good standing, is either an organization described in section 501(c) (3) of the Internal Revenue Code ("Code") or a governmental unit, and is not a "private foundation" described in section 509(a) of the Code. Grantee will promptly notify the Foundation of any change in Grantee's tax status under the Code.

(b) In no event will Grantee use any grant funds:

(i) to carry on propaganda, or otherwise to attempt, to influence legislation;

(ii) to influence the outcome of any specific public election or to carry on, directly or indirectly, any voter registration drive; or

(iii) to undertake any activity other than for a charitable, educational or other exempt purpose specified in section 170(c)(2)(B) of the Code.

(c) Grantee will comply with all applicable laws and regulations.

7. **Repayment:** Grantee agrees to repay to the Foundation any portion of the grant funds not used for the grant's purposes. In addition, the Foundation may discontinue any further payments to Grantee, and may direct Grantee to repay any unexpended grant funds to the Foundation, if any of the following events occurs:

(i) Grantee ceases to maintain its tax-exempt status as described in paragraph 6(a) above;

(ii) Grantee fails to comply with the terms of this letter; or

(iii) There is a material change in Grantee's key personnel that in the sole opinion of the Foundation adversely affects Grantee's management of the grant.

8. **Release and Indemnity:** Unless prohibited by law, Grantee shall release, indemnify, defend and hold harmless the Foundation and its directors, officers, employees and agents from and against any and all claims, actions, suits, demands, damages, losses, expenses and liabilities, arising out of or related in any way to the actions or omissions of Grantee (or its directors, officers, employees, agents or contractors) in connection with the Grant and the project funded by the Grant, except to the extent caused by the Foundation's (or its directors', officers', employees' or agents') negligent actions or omissions. Grantee further agrees to carry insurance in such forms and amounts as are commercially reasonable and appropriate to cover Grantee's operations and to enable Grantee to indemnify and defend the Foundation as provided hereunder.

9. **Grant Publicity:** Grant publicity related to this grant consistent with Grantee's normal practice is permitted, subject to the following provisions. The Foundation expects any announcements and other publicity to focus on Grantee's work and the project or issue funded by the grant. Recognition of the Foundation's role in funding the project is permitted, provided that the timing, content and strategic focus of such publicity should be approved by the Foundation contact listed in paragraph 11. Publicizing the grant and the Foundation in Grantee's publications and communications in a manner consistent with similar grants obtained by Grantee is permitted.

The Foundation may ask Grantee to provide illustrations, photographs, videos, recordings, information or other materials related to the grant (collectively "Grant Work Product") for use in Foundation communications including the Foundation's website, annual report, newsletters, board materials, presentations, communications and other publications. Grantee agrees to provide the Foundation with such items upon the Foundation's reasonable request and hereby grants to the Foundation and anyone acting under the authority of the Foundation a fully paid-up, world-wide, right and license to use, reproduce, display and distribute the Grant Work Product in connection with the Foundation's charitable operations and activities. In connection therewith, Grantee shall be responsible for obtaining all necessary rights and permissions from third parties for the Foundation to use the Grant Work Product for these purposes. By signing this Agreement, Grantee also acknowledges and agrees to use by the Foundation of historical, programmatic and other information relating to Grantee and the grant hereunder.

10. **Gratuities:** The Foundation desires that all of Grantee's resources be dedicated to accomplishing its philanthropic purposes. Therefore, Grantee agrees that it will not furnish the Foundation or its Board of Directors, officers, staff or affiliates with any type of benefit related to this grant including tickets, tables, memberships, commemorative items, recognition items, or any other benefit or gratuity of any kind.

11. **Contact:** For all communications regarding this grant, please contact the Foundation by email at HomeRegion@wffmail.com. Please reference Grant #2014-731 in your communication.

We have enclosed two original grant letters. Please sign one copy as Grantee's acknowledgment of the terms and conditions herein stated and return it to me in the enclosed self-addressed envelope. If the signed acknowledgment of this letter is not received in the Foundation's office by June 30, 2014, the Foundation will consider the Grantee to have declined the grant.

On behalf of the Foundation, I extend every good wish for the success of your organization's endeavors.

Sincerely,

Buddy D. Philpot
Executive Director

ACKNOWLEDGED AND AGREED

By: _____

Lioneld Jordan (Date)
City of Fayetteville

Appendix A: City of Fayetteville
Town Branch/Tsa-La-Gi Loop Trail

Output Performance Measures:

- The City will successfully acquire all rights-of-way or easements needed to complete this trail by November 2015.

- The City will complete construction of a minimum of 10,975 linear feet of 12' wide concrete trail by December 2015. This trail will be a minimum of 12' wide concrete and will be built to uniform design and construction standards per design guidelines outlined in the "Trail Design Resource Notebook" developed by ALTA Planning and utilized for the Razorback Regional Greenway as evidenced by inspection of WFF consultant.

Outcome Performance Measures:

- By January 2016, the City will commit to manage and maintain this section of trail to the same standards as the Razorback Regional Greenway as evidenced by a signed letter by the Mayor.

City of Fayetteville Staff Review Form

2014-0277

Legistar File ID

7/15/2014

City Council Meeting Date - Agenda Item Only
N/A for Non-Agenda Item

Matt Mihalevich	6/23/2014	Engineering / Development Services Department
Submitted By	**Submitted Date**	**Division / Department**

Action Recommendation:

Staff recommends approval of grant agreement #2014-734 with the Walton Family Foundation in the amount of $150,000 and approval of a budget adjustment to recognize revenue. The grant funds will be used for the design and engineering of the Cato Springs Trail from Greathouse Park to the Fayetteville Regional Park and Mt. Kessler Preserve.

Budget Impact:

4470.9470.5814.05	Sales Tax Cap Imp
Account Number	Fund
02016	Trail Development
Project Number	Project Title

Budgeted Item?	Yes	Current Budget	$	3,625,008.00
		Funds Obligated	$	1,952,546.00
		Current Balance	$	1,672,462.00
Does item have a cost?	No	Item Cost	$	-
Budget Adjustment Attached?	Yes	Budget Adjustment	$	150,000.00
		Remaining Budget	$	1,822,462.00

V20140610

Previous Ordinance or Resolution # _____

Original Contract Number: _____

Approval Date: _____

ENTERED 6-23-14 DM

ENTERED 6/24/14 PK

Comments:

June 24, 2014

Marsha Hartwick 6/24/14

6/24/14

CITY OF Fayetteville ARKANSAS

CITY COUNCIL AGENDA MEMO

MEETING OF JULY 15TH, 2014

TO: Mayor and City Council

THRU: Don Marr, Chief of Staff
Jeremy Pate, Development Services Director
Chris Brown, City Engineer

FROM: Matt Mihalevich, Trails Coordinator

DATE: June 26th, 2014

SUBJECT: **Walton Family Foundation Grant Acceptance – Cato Springs Trail Design**

RECOMMENDATION:
Staff recommends approval of grant agreement #2014-734 with the Walton Family Foundation in the amount of $150,000 and approval of a budget adjustment to recognize this revenue. The grant funds will be used for the design and engineering of the Cato Springs Trail from Greathouse Park to the Fayetteville Regional Park and Mt. Kessler Preserve.

BACKGROUND:
The City of Fayetteville is undertaking an aggressive trail building campaign in southern Fayetteville over the next 5 years. The Frisco Trail extension south from MLK Boulevard across S. School St. and into Walker Park was opened to the public on April, 12th 2014. With this critical connection complete, the Fayetteville Alternative Transportation and Trails (FATT) Master Plan envisions a series of three trails extending to the south; the Tsa-La-Gi Trail located parallel to MLK Blvd, which is 80% completed, the Town Branch Trail that is located south of 15th Street and is partially completed and the Cato Springs Trail which follows the Cato Springs Branch and will pass over the Fulbright Expressway and under I-49 along Razorback Road.

DISCUSSION:
The Walton Family Foundation grant funding will matched 50:50 with City funds and utilized to hire an engineering consultant to perform the complete design and permitting for the Cato Springs Trail project. The Cato Springs Trail will go south along the Cato Springs Branch and portions of Razorback Road across the Fulbright Expressway and I-49 to the Fayetteville Regional Park and the Mt. Kessler Preserve. This Trail will be designed as a 12 foot wide concrete multi-use trail with pedestrian lighting. In addition, the trail will include a bridge across the Cato Springs Branch and a bridge over the Fulbright Expressway that will require considerable design and permit approval from the Arkansas State Highway and Transportation Department. Preliminary estimates establish its length at 10,836 linear feet or slightly over 2 miles. The City estimates that the design and permitting phase will take 18 months, from July of 2014 until January of 2016. This trail project will then be bid and constructed by a private contractor while the City's in-house trail construction crews continues work on other trail connections.

BUDGET/STAFF IMPACT:
The Walton Family Foundation Grant is a 50:50 matching grant program. The $150,000 in grant funding will be matched with $150,000 in City funds for a total design budget of $300,000. The City portion of the matching funds are available through the Trail Development Capital Improvement Program for 2014.

Attachments:
Walton Family Foundation Grant #2014-734 agreement
Map - Regional Park/Kessler Reserve Connection Trails

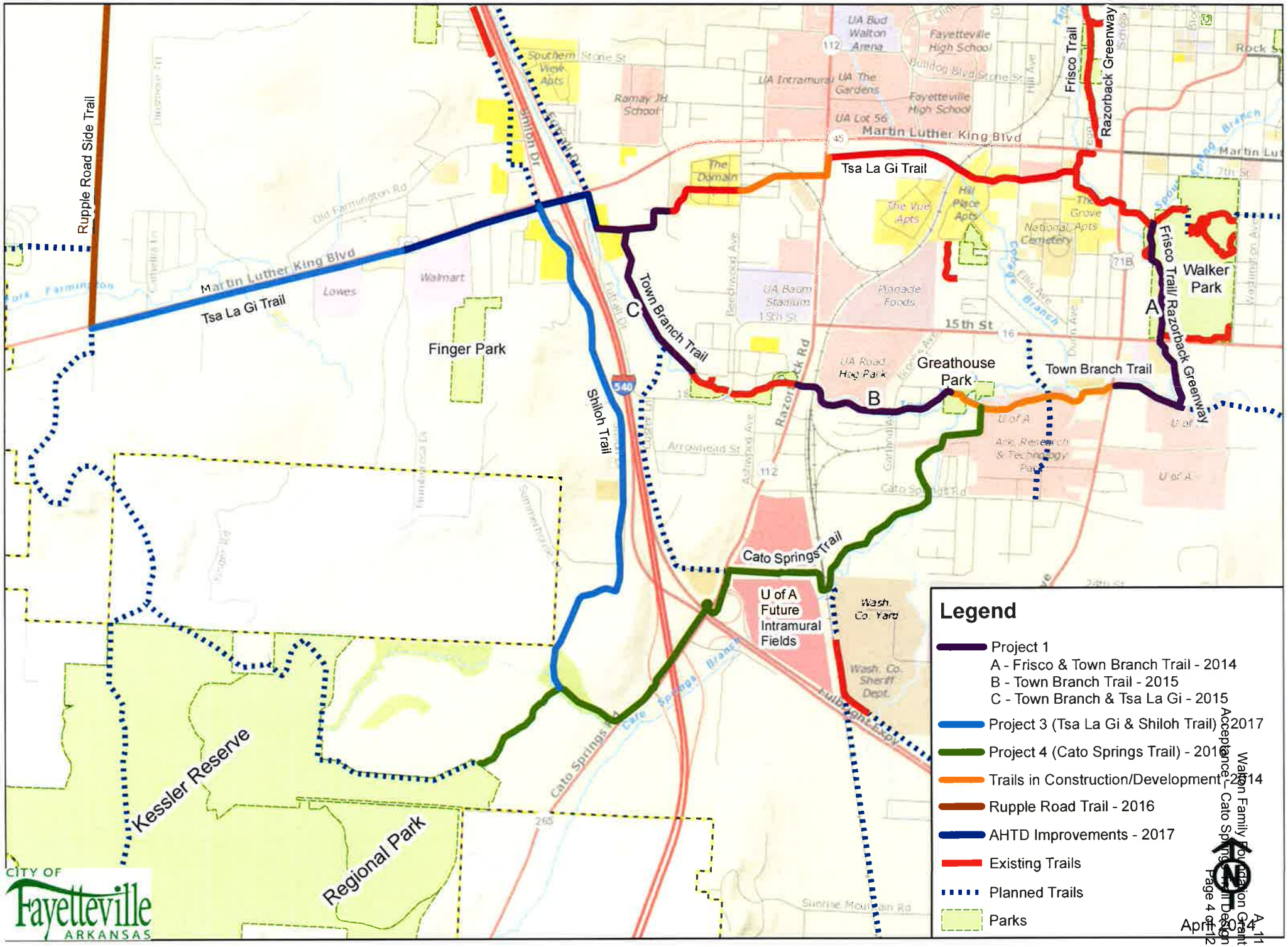

Regional Park / Kessler Reserve Connection Trails

Walton Family Foundation Grant
Acceptance - Cato Springs Trail Design
April 2014
Page 4 of 12
A-11

RESOLUTION NO. _____

A RESOLUTION TO EXPRESS THE CITY COUNCIL'S THANKS AND GRATITUDE TO THE WALTON FAMILY FOUNDATION FOR ITS GENEROUS $150,000.00 MATCHING GRANT FOR THE DESIGN AND ENGINEERING OF THE CATO SPRINGS TRAIL, TO APPROVE THE GRANT AGREEMENT AND TO APPROVE A BUDGET ADJUSTMENT TO RECOGNIZE THIS $150,000.00 GRANT

WHEREAS, the Walton Family Foundation has proven to be a strong supporter of Fayetteville's trail systems including the Mount Kessler acquisition; and

WHEREAS, the Walton Family Foundation has offered a 50/50 grant in the amount of $150,000.00 for the design and engineering of the Cato Springs Trail which will provide the access for our trail system to our Regional Park and Mount Kessler.

NOW, THEREFORE BE IT RESOLVED BY THE CITY COUNCIL OF THE CITY OF FAYETTEVILLE, ARKANSAS:

Section 1: That the City Council of the City of Fayetteville, Arkansas hereby thanks and expresses its gratitude to the Walton Family Foundation for its generous $150,000.00 matching grant for the design and engineering of the Cato Springs Trail, approves the attached Grant Agreement, authorizes Mayor Jordan to sign this Grant Agreement and agrees to match the grant using the Trail Development Capital Improvement Program.

Section 1: That the City Council of the City of Fayetteville, Arkansas hereby approves the attached budget adjustment.

PASSED and **APPROVED** this 15th day of July, 2014.

APPROVED: ATTEST:

By: _____ By: _____

LIONELD JORDAN, Mayor **SONDRA E. SMITH**, City Clerk/Treasurer

City of Fayetteville, Arkansas - Budget Adjustment Form (Legistar)

Budget Year	Division:	Development Services	Adjustment Number
2014	Dept.:	Development Services	
	Requestor:	Matt Mihalevich	

BUDGET ADJUSTMENT DESCRIPTION / JUSTIFICATION:

The Walton Family Foundation approved the City's application for a grant in the amount of $150,000 for the design and engineering of the Cato Springs Trail. This grant requires a 50:50 match with the City portion available through the Trail Development Capital Improvement Program for budget year 2014.

Grant #2014-734

COUNCIL DATE: 7/15/2014

LEGISTAR FILE ID#: **2017-0277**

Budget Director Date

TYPE:

DESCRIPTION:

GLDATE:

POSTED: /

RESOLUTION/ORDINANCE

v.20140619

Account Number	Increase / (Decrease) Expense	Increase / (Decrease) Revenue	Project.Sub# Project	Sub	AT	Account Name
TOTAL	150,000	150,000				
4470.0947.4305.00	-	150,000	02016	1405	RE	Commercial Grants
4470.9470.5814.05	150,000	-	02016	1405	EX	Trails
	-	-				
	-	-				
	-	-				
	-	-				
	-	-				
	-	-				
	-	-				
	-	-				
	-	-				
	-	-				
	-	-				
	-	-				

The
WALTON FAMILY
FOUNDATION

P.O. Box 2030 | Bentonville | AR 72712-2030

June 11, 2014

Lioneld Jordan
Mayor
City of Fayetteville
113 W. Mountain Street
Fayetteville, AR 72701

RE: Grant #2014-734

Dear Mayor Jordan,

It is my pleasure to inform you that The Walton Family Foundation, Inc. (the "Foundation") has approved a grant in the amount of up to $150,000.00 to the City of Fayetteville (the "Grantee"). This grant is subject to the following terms and conditions:

1. **Purpose:** The purpose of the grant is to support the design phase of the planned Cato Springs Trail project. The Cato Springs Trail will go south along the Cato Springs Branch and portions of Razorback Road across the Fulbright Expressway and I-49 to the Fayetteville Regional Park and the Mt. Kessler Preserve. This Trail will be designed as a 12-foot wide concrete multi-use trail with pedestrian lighting. This trail will include a bridge across the Cato Springs Branch and a bridge over the Fulbright Expressway. This grant is more fully described in Grantee's proposal dated April 24, 2014. Grantee agrees to use all grant funds exclusively for the grant's purposes. Any changes in these purposes must be authorized in advance by the Foundation in writing.

2. **Amount: Up to One Hundred Fifty Thousand Dollars ($150,000.00).**

3. **Payable:** Upon receipt of a copy of this letter acknowledging the terms and conditions set forth herein, payments in the amount of up to $150,000.00 shall be eligible for payment on a drawdown basis no more frequently than quarterly. With each payment request, the City will submit a report outlining work completed as well as all paid invoices to date. A WFF consultant will inspect the work completed for adherence to design standards as well as original budget and, upon approval, WFF will reimburse no more than 50% of eligible paid invoices and expenses, not to exceed 50% of the cost of construction, up to $150,000.00. All payment requests must be received by no later than August 15, 2016 to be eligible for payment.

Further installments shall be contingent upon the Foundation's approval of the Grantee's activities of the grant as evidenced by the reports described in paragraph 5) below and other information the Foundation may gather.

4. **Accounting:** (a) The Foundation encourages, whenever feasible, the deposit of grant funds in an interest-bearing account. For purposes of this letter, the term "grant funds" includes the grant and any income earned thereon.

(b) Grantee will maintain records of receipts and expenditures made in connection with the grant funds and will keep these records during the period covered by the Grantee's reporting obligations specified in paragraph 5 and for at least four years thereafter ("Maintenance Period"). Grantee will make its books and records in connection with the grant funds available for inspection by the Foundation during normal business hours as the Foundation may request at any time during the Maintenance Period.

5. **Reporting and Evaluation:** Grantee will provide the Foundation with financial and narrative reports by the due dates listed in the report schedule below. Each report shall include an account of expenditures of grant funds, and a brief narrative of what was accomplished (including a description of progress made in fulfilling the purposes of the grant and a confirmation of Grantee's compliance with the terms of the grant).

Report Date	Report Type
12/15/2014	Financial & Narrative
6/30/2015	Financial & Narrative
12/15/2015	Financial & Narrative
8/15/2016	Final report - end of grant

Success will be measured against the outputs and outcomes described in Appendix A.

All reports will be sent electronically to HomeRegion@wffmail.com. Please reference Grant #2014-734 on all reports submitted.

Grantee payments are always contingent upon the Foundation's approval of Grantee's operations based on the above reports and the Foundation's satisfaction with such information as it chooses to obtain from other sources.

6. **Representations:** Grantee represents and warrants to the Foundation that:

(a) Grantee is an organization in good standing, is either an organization described in section 501(c) (3) of the Internal Revenue Code ("Code") or a governmental unit, and is not a "private foundation" described in section 509(a) of the Code. Grantee will promptly notify the Foundation of any change in Grantee's tax status under the Code.

(b) In no event will Grantee use any grant funds:

(i) to carry on propaganda, or otherwise to attempt, to influence legislation;

(ii) to influence the outcome of any specific public election or to carry on, directly or indirectly, any voter registration drive; or

(iii) to undertake any activity other than for a charitable, educational or other exempt purpose specified in section 170(c)(2)(B) of the Code.

(c) Grantee will comply with all applicable laws and regulations.

7. **Repayment:** Grantee agrees to repay to the Foundation any portion of the grant funds not used for the grant's purposes. In addition, the Foundation may discontinue any further payments to Grantee, and may direct Grantee to repay any unexpended grant funds to the Foundation, if any of the following events occurs:

(i) Grantee ceases to maintain its tax-exempt status as described in paragraph 6(a) above;

(ii) Grantee fails to comply with the terms of this letter; or

(iii) There is a material change in Grantee's key personnel that in the sole opinion of the Foundation adversely affects Grantee's management of the grant.

8. **Release and Indemnity:** Unless prohibited by law, Grantee shall release, indemnify, defend and hold harmless the Foundation and its directors, officers, employees and agents from and against any and all claims, actions, suits, demands, damages, losses, expenses and liabilities, arising out of or related in any way to the actions or omissions of Grantee (or its directors, officers, employees, agents or contractors) in connection with the Grant and the project funded by the Grant, except to the extent caused by the Foundation's (or its directors', officers', employees' or agents') negligent actions or omissions. Grantee further agrees to carry insurance in such forms and amounts as are commercially reasonable and appropriate to cover Grantee's operations and to enable Grantee to indemnify and defend the Foundation as provided hereunder.

9. **Grant Publicity:** Grant publicity related to this grant consistent with Grantee's normal practice is permitted, subject to the following provisions. The Foundation expects any announcements and other publicity to focus on Grantee's work and the project or issue funded by the grant. Recognition of the Foundation's role in funding the project is permitted, provided that the timing, content and strategic focus of such publicity should be approved by the Foundation contact listed in paragraph 11. Publicizing the grant and the Foundation in Grantee's publications and communications in a manner consistent with similar grants obtained by Grantee is permitted.

The Foundation may ask Grantee to provide illustrations, photographs, videos, recordings, information or other materials related to the grant (collectively "Grant Work Product") for use in Foundation communications including the Foundation's website, annual report, newsletters, board materials, presentations, communications and other publications. Grantee agrees to provide the Foundation with such items upon the Foundation's reasonable request and hereby grants to the Foundation and anyone acting under the authority of the Foundation a fully paid-up, world-wide, right and license to use, reproduce, display and distribute the Grant Work Product in connection with the Foundation's charitable operations and activities. In connection therewith, Grantee shall be responsible for obtaining all necessary rights and permissions from third parties for the Foundation to use the Grant Work Product for these purposes. By signing this Agreement, Grantee also acknowledges and agrees to use by the Foundation of historical, programmatic and other information relating to Grantee and the grant hereunder.

10. **Gratuities:** The Foundation desires that all of Grantee's resources be dedicated to accomplishing its philanthropic purposes. Therefore, Grantee agrees that it will not furnish the Foundation or its Board of Directors, officers, staff or affiliates with any type of benefit related to this grant including tickets, tables, memberships, commemorative items, recognition items, or any other benefit or gratuity of any kind.

11. **Contact:** For all communications regarding this grant, please contact the Foundation by email at HomeRegion@wffmail.com. Please reference Grant #2014-734 in your communication.

We have enclosed two original grant letters. Please sign one copy as Grantee's acknowledgment of the terms and conditions herein stated and return it to me in the enclosed self-addressed envelope. If the signed acknowledgment of this letter is not received in the Foundation's office by June 30, 2014, the Foundation will consider the Grantee to have declined the grant.

On behalf of the Foundation, I extend every good wish for the success of your organization's endeavors.

Sincerely,

Buddy D. Philpot
Executive Director

ACKNOWLEDGED AND AGREED

By: _____
Lioneld Jordan (Date)
City of Fayetteville

Appendix A: City of Fayetteville
Cato Springs Trail - Design, engineering & permitting

Who is doing what?	By When?	Measured By?
Goal: Develop construction-ready design and engineering documents for the Cato Springs Trail in Fayetteville, AR.		
Outputs		
City of Fayetteville will sign a contract with a qualified and experienced design and engineering firm.	July 31, 2014	Signed contract
The design firm will conduct all required public input sessions.	December 31, 2015	Program records
The design firm will develop a set of construction-ready design and engineering documents for the Cato Springs Trail in Fayetteville, Arkansas that adheres to uniform design and construction standards, per state and federal requirements, as well as design guidelines outlined in the "trail design resource notebook" developed by ALTA Planning and utilized for the Razorback Regional Greenway.	May 31, 2016	As reviewed by WFF consultant
Outcomes		
The design firm will obtain all AHTD approvals for proposed design and route.	July 31, 2016	Signed AHTD approval document

City of Fayetteville Staff Review Form

2014-0294

Legistar File ID

7/15/2014

City Council Meeting Date - Agenda Item Only
N/A for Non-Agenda Item

Alan Spann	6/27/2014	Parks & Recreation / Parks & Recreation Department
Submitted By	**Submitted Date**	**Division / Department**

Action Recommendation:

A resolution to approve a Budget Adjustment in the amount of $28,202 recognizing and allocating donation revenue from citizens and business made to the Yvonne Richardson Community Center (YRCC) during the first half of 2014.

Budget Impact:

1010.5280.5342.00/ 1010.5280.5400.00	1010 - General
Account Number	Fund
33051.1001 / 33051.1002	Parks & Recreation Donations
Project Number	Project Title

Budgeted Item?	Yes	Current Budget	$	26,840.00
		Funds Obligated	$	7,786.50
		Current Balance	**$**	**19,053.50**
Does item have a cost?	No	Item Cost	$	-
Budget Adjustment Attached?	Yes	Budget Adjustment	$	28,202.00
		Remaining Budget	**$**	**47,255.50**

V20140610

Previous Ordinance or Resolution # _____

Original Contract Number: _____

ENTERED 7/1/14

Approval Date: _____

Comments:

7/1/14

Paul A. Becker 7-2-2014

Don Marr 7-2-14

ENTERED 7/11/14

CITY OF Fayetteville ARKANSAS

STAFF MEMO

MEETING OF JULY 15, 2014

TO: Mayor and City Council

THRU: Don Marr, Chief of Staff
Kit Williams, City Attorney
Connie Edmonston, Parks and Recreation Director

FROM: Alan Spann, Recreation Superintendent

DATE: June 27, 2014

SUBJECT: Recognition of donations to Yvonne Richardson Community Center (YRCC)

RECOMMENDATION:
Parks and Recreation staff recommend the approval of a Budget Adjustment in the amount of $28,202 recognizing and allocating donation revenue from citizens and business made to the Yvonne Richardson Community Center (YRCC) during the first half of 2014.

BACKGROUND:
A variety of citizen groups and businesses have made several donations during the first half of 2014 to be used to maintain free YRCC programming or to improve equipment and facilities.

DISCUSSION:
Approval allows for the recognition of funds along with the allocation of funds toward their intended usage, according to the donating party. This includes funding free programs for at-risk youth, program equipment needs, and the purchase of new gym flooring. (See the attached detail list of donations.)

BUDGET/STAFF IMPACT:
Recognize YRCC Donations in the amount of $28,202.

Attachments:
YRCC Donation Breakdown
Staff Review Form
Budget Adjustment Form

RESOLUTION NO. _____

A RESOLUTION TO APPROVE A BUDGET ADJUSTMENT IN THE TOTAL AMOUNT OF $28,202.00 REPRESENTING DONATION REVENUE TO THE YVONNE RICHARDSON COMMUNITY CENTER FOR THE FIRST HALF OF 2014

BE IT RESOLVED BY THE CITY COUNCIL OF THE CITY OF FAYETTEVILLE, ARKANSAS:

Section 1: That the City Council of the City of Fayetteville, Arkansas hereby approves a budget adjustment, a copy of which is attached as Exhibit "A", in the total amount of $28,202.00 representing donation revenue to the Yvonne Richardson Community Center for the first half of 2014.

Section 2: That the City Council of the City of Fayetteville, Arkansas hereby expresses its sincere appreciation for the donations.

PASSED and **APPROVED** this 15th day of July, 2014.

APPROVED:

By: _____
LIONELD JORDAN, Mayor

ATTEST:

By: _____
SONDRA E. SMITH, City Clerk/Treasurer

City of Fayetteville, Arkansas - Budget Adjustment Form (Legistar)

Budget Year	Division:	Parks & Recreation	Adjustment Number
2014	Dept.:	Parks & Recreation	
	Requestor:	Alan Bearden	

BUDGET ADJUSTMENT DESCRIPTION / JUSTIFICATION:

Recognize and allocate donation revenue from citizens and business made to the Yvonne Richardson Community Center (YRCC) during the first half of 2014.

COUNCIL DATE: 7/15/2014

LEGISTAR FILE ID#: **2014-0294**

Kevin Springer
6/27/2014 12:53 PM

Budget Director Date

TYPE:

DESCRIPTION:

GLDATE:

RESOLUTION/ORDINANCE

POSTED: /

v.20140619

	Increase / (Decrease)		Project.Sub#			
Account Number	Expense	Revenue	Project	Sub	AT	Account Name
TOTAL	28,202	28,202				
1010.5280.5342.00	4,663		33051	1001	EX	Promotional Activities
1010.5280.5400.00	12,500		33051	1002	EX	Building & Grounds Maintenance
1010.5280.5342.00	11,039	-	33051	1001	EX	Promotional Activities
1010.0001.4808.03		4,663	33051	1001	RE	Donations - YRCC
1010.0001.4808.03		12,500	33051	1002	RE	Donations - YRCC
1010.0001.4808.03	-	11,039	33051	1001	RE	Donations - YRCC
	-	-				
	-	-				
	-	-				
	-	-				
	-	-				
	-	-				
	-	-				
	-	-				
	-	-				
	-	-				

EXHIBIT
A

Year-To-Date Donations Received For YRCC

Date	GL Revenue Account	Amount	Received From	Donation to be used for
1/21/2014	1010.0001.4808.03 33051.1002	$5,000.00	Southeast Fayetteville Community Center	YRCC - Floor Project
1/22/2014	1010.0001.4808.03 33051.1001	$335.00	Jewelers Mutual Insurance Company	YRCC - Promotional Activities
2/20/2014	1010.0001.4808.03 33051.1002	$7,500.00	Northwest Arkansas Economic	YRCC - Floor Project
2/24/2014	1010.0001.4808.03 33051.1001	$1,200.00	Southeast Fayetteville Community Center	YRCC - Promotional Activities
2/24/2014	1010.0001.4808.03 33051.1001	$100.00	Vickie & Michael Bollinger	YRCC - Promotional Activities
3/4/2014	1010.0001.4808.03 33051.1001	$6.00	U of A Dept. of Intercollegiate Athletics	YRCC - Promotional Activities
3/4/2014	1010.0001.4808.03 33051.1001	$1,127.00	University of Arkansas	YRCC - Promotional Activities
3/4/2014	1010.0001.4808.03 33051.1001	$100.00	Pettit Property Management	YRCC - Prom. Activities - Pickle Ball Equip.
4/4/2014	1010.0001.4808.03 33051.1001	$200.00	Gail Mills	YRCC - Promotional Activities
4/18/2014	1010.0001.4808.03 33051.1001	$945.00	Fayetteville Youth Wrestling Club	YRCC - Promotional Activities
4/18/2014	1010.0001.4808.03 33051.1001	$500.00	Southeast Fayetteville Community Center	YRCC - Promotional Activities
4/18/2014	1010.0001.4808.03 33051.1001	$50.00	Zachary L. Ziler	YRCC - Promotional Activities
4/30/2014	1010.0001.4808.03 33051.1001	$100.00	Rita Childress	YRCC - Promotional Activities
5/14/2014	1010.0001.4808.03 33051.1001	$239.00	Unitarian Universalist Fellowship of Fay.	YRCC - Promotional Activities
5/28/2014	1010.0001.4808.03 33051.1001	$1,000.00	Compassion Fayetteville - Nancy Harris	YRCC - Promotional Activities
6/13/2014	1010.0001.4808.03 33051.1001	$450.00	Rotary Club of Fayetteville	YRCC - Promotional Activities
6/23.2014	1010.0001.4808.03 33051.1001	$9,350.00	Southeast Fayetteville Community Center	YRCC - Promotional Activities
	YRCC Subtotal	**$28,202.00**		

City of Fayetteville Item Review Form

2014-0293

Legistar File Number

07/15/14

City Council Meeting Date - Agenda Item Only

N/A for Non-Agenda Item

Kristina Jones

Submitted By

Sustainability & Resilence

Department

Action Required:

Staff recommends approval of a $2,465 grant for representatives from the Cities of Fayetteville and Columbia, Mo to travel and meet in Lawrence, KS for a 2.5 day meeting including garden tours and networking events, in August 2014 to help staff from each City exchange information regarding the implementation of urban agriculture policies and successful community garden programs.

Does this item have a cost? No

$0.00	$2,465.00	Urban Ag Peer Exchange Grant
Cost of this request	Category or Project Budget	Program or Project Name
1010.0001.4305.00	$0.00	Commercial Grant
Account Number	Funds Used to Date	Program or Project Category
31402	$2,465.00	General Fund
Project Number	Remaining Balance	Fund Name

Budgeted Item? Yes **Budget Adjustment Attached?** Yes

V20130812

ENTERED 10-26-14

ENTERED 7/1/14

Previous Ordinance or Resolution #

Original Contract Number:

Comments:

BT - 6/30/14

Paul A. Becker 7-1-2014

7-1-14

CITY OF Fayetteville ARKANSAS

CITY COUNCIL AGENDA MEMO

MEETING OF JULY 15, 2014

TO: Mayor and City Council

THRU: Don Marr, Chief of Staff
Peter Nierengarten, Sustainability & Resilience Director

FROM: Kristina Jones, Sustainability & Resilience Designer and Project Coordinator

DATE: June 27, 2014

SUBJECT: **Acceptance of Urban Ag Peer Exchange Grant**

RECOMMENDATION:
Approval of a $2,465 grant for representatives from the Cities of Fayetteville and Columbia, Mo to travel and meet in Lawrence, KS for a 2.5 day meeting including garden tours and networking events, in August 2014 to help staff from each City exchange information regarding the implementation of urban agriculture policies and successful community garden programs.

BACKGROUND:
In March of 2013, in response to citizen demand for greater access to more locally produced food, the Fayetteville City Council passed a resolution requesting staff to draft changes to Fayetteville's Unified Development Code that would increase citizens' access to urban agriculture and provide greater food security for Fayetteville. These changes, a new "urban ag" ordinance, including provisions for the keeping of fowl, bees, and goats, and limited sales of home produced products in residential areas, were brought forward and adopted by City Council in March 2014. The next area of focus for the City, as requested by the community, is greater access to community gardens.

DISCUSSION:
In May of 2014, the City of Fayetteville, in partnership with the sustainability offices of Columbia, MO and Lawrence, KS applied for and was awarded a grant through the USDN (Urban Sustainability Directors Network) to organize a peer exchange event. All three Cities are all currently working on food policy initiatives and this event will allow 16 staff and community representatives to exchange best practices and implementation strategies for urban agriculture related policies. Of particular interest to the City of Fayetteville is Lawrence's "Common Ground" program, a community gardening and urban farming program that utilizes vacant, city-owned properties. Fayetteville's Sustainability and Resilience Department seeks to return home with a better understanding of ways to promote community gardens and support existing urban agriculture policies, as well as a strengthened relationship with our peer cities.

BUDGET/STAFF IMPACT:
None

ATTACHMENTS:

- Grant Proposal
- Grant Acceptance Agreement
- Budget Adjustment

RESOLUTION NO. _____

A RESOLUTION TO AUTHORIZE ACCEPTANCE OF A GRANT FROM THE URBAN SUSTAINABILITY DIRECTORS NETWORK IN THE AMOUNT OF $2,465.00, AND TO APPROVE A BUDGET ADJUSTMENT

BE IT RESOLVED BY THE CITY COUNCIL OF THE CITY OF FAYETTEVILLE, ARKANSAS:

Section 1. That the City Council of the City of Fayetteville, Arkansas hereby authorizes acceptance of a grant from the Urban Sustainability Directors Network in the amount of $2,465.00.

Section 2. That the City Council of the City of Fayetteville, Arkansas hereby approves a budget adjustment, a copy of which is attached to this Resolution as Exhibit "A".

PASSED and **APPROVED** this 15th day of July, 2014.

APPROVED:

By: _____
LIONELD JORDAN, Mayor

ATTEST:

By: _____
SONDRA E. SMITH, City Clerk/Treasurer

City of Fayetteville, Arkansas - Budget Adjustment Form (Legistar)

Budget Year	Division:	Sustainability & Resilience	Adjustment Number
2014	Dept.:	Chief of Staff	
	Requestor:	Peter Nierengarten	

BUDGET ADJUSTMENT DESCRIPTION / JUSTIFICATION:

Approval of a $2,465 grant and Budget Adjustment for representatives from the Cities of Fayetteville and Columbia, Mo to travel and meet in Lawrence, KS for a 2.5 day meeting including garden tours and networking events, in August 2014 to help staff from each City exchange information regarding the implementation of urban agriculture policies and successful community garden programs.

COUNCIL DATE: 7/15/2014

LEGISTAR FILE ID#: **2014-0293**

Kevin Springer
6/26/2014 3:02 PM

Budget Director Date

TYPE:

DESCRIPTION:

GLDATE:

POSTED: /

RESOLUTION/ORDINANCE

v.20140619

Account Number	Increase / (Decrease) Expense	Increase / (Decrease) Revenue	Project.Sub# Project	Sub	AT	Account Name
TOTAL	2,465	2,465				
1010.6310.5304.00	2,465	-	31402	1	EX	Travel & Training
1010.0001.4305.00	-	2,465	31402	1	RE	Commercial Grants
	-	-				
	-	-				
	-	-				
	-	-				
	-	-				
	-	-				
	-	-				
	-	-				
	-	-				
	-	-				
	-	-				
	-	-				

EXHIBIT A

USDN | urban sustainability directors network

A Project of Global Philanthropy Partnership

June 13, 2014

Peter Nierengarten
Director – Sustainability and Resilience Dept.
Fayetteville AR
479.575.8272,
pnierengarten@fayetteville-ar.gov

RE: PE07

Dear Peter,

We are pleased to proceed with a USDN Peer Learning Exchange grant for $2,465 for representatives from Columbia and Fayetteville to travel to and meet in Lawrence for a 2.5 day meeting in August 2014 to help staff from each City move forward with progressive Urban Agriculture Policies and successful community garden programs.

The outcomes of the peer learning exchange will include:

- Better understanding by individual cities of ways to promote community gardens and develop successful urban agriculture policy
- After-Action report and Crystal Ball report
- Report to the Sustainable Food Systems Group (written and via phone conference, if desired)

Here are other terms of the grant:

- There are four reporting requirements for grantees within 30 days after the peer exchange for the two lead cities has taken place:
    1. After-Action Report: Two-page synopsis of meetings and discussions capturing key lessons learned due within 30 days of completion of the exchange.
    2. Crystal Ball Report: One-page documents from each of the participating cities forecasting the anticipated impacts of the exchange with as much specificity as possible due within 30 days of completion of the exchange. The intent is to capture what each participating community believes may happen as a result of the exchange.
    3. Products produced as described above.

4. Detailed record of expenditures of grant funds.

- The grant funds cannot be used for lobbying.
- The grant funds must be expended per the proposed budget.
- The City of Fayetteville will provide oversight and will administer the grant and reimburse participants.
- Under United States law, Grant Funds may be expended only for charitable, scientific, literary, or educational purposes. This Grant is made only for the purposes stated in this Agreement and Grant Funds shall be used for such purposes in accordance with the proposed budget. Any Grant Funds not expended or committed for the purposes of the Grant, or within the period stated, must be returned to USDN, unless otherwise authorized in writing by USDN, a project of Global Philanthropy Partnership.

Please sign this letter indicating that you agree with the terms. USDN is a project of Global Philanthropy Partnership. Once Global Philanthropy Partnership receives your signed letter with description of how the check should be issued, it will disburse the grant funds.

Sincerely,

April Donnellan

Executive Director

Global Philanthropy Partnership

cc: Nils Moe, Managing Director

Urban Sustainability Directors Network

Acceptance of Grant Terms

Mayor Lioneld Jordan accepts the grant conditions of this letter

Name: Lioneld Jordan

Title: Mayor

Date:

Signature:

How the Check Should Be Issued: City of Fayelleville, Arkansas

Project Manager: Peter Nierengarten

Project Budget

Description	Cost	Quantity	Total	Notes
Van Rental	$150	2	$300	Van for 2 morning tours
Hotel	$125	10	$1,250	10 people, 2 nights
Per diem	$61	15	$915	15 people, 2 days
		Total Request	**$2,465**	

USDN Peer Exchange Proposal: Urban Agriculture
Applicants: Fayetteville, AR; Columbia, MO; Lawrence; KS
Primary contact: Peter Nierengarten, City of Fayetteville, 479.575.8272, pnierengarten@fayetteville-ar.gov

During the last few decades American communities have seen a rebirth of interest in locally produced foods and products. A local foods movement strives to build a locally based, sustainable food economy where production, processing and distribution are integrated with an emphasis on social health benefits and environmentally sustainable local food crops and products. Additionally, supporting a strong local foods system is essential to addressing the issues of hunger and nutrition.

In March of 2013, in response to citizen demand for greater access to more locally produced food, the Fayetteville City Council passed a resolution requesting staff to draft changes to Fayetteville's Unified Development Code that would increase citizens' access to urban agriculture and provide greater food security for Fayetteville. The City's Sustainability and Resilience Department then began working with stakeholders and developed a list of recommended changes. During the winter of 2013/14 those recommended changes were presented to the public and were eventually adopted by City Council in March 2014. This new ordinance is an update and replacement of the previous "Animals & Fowl" ordinance and includes provisions for the keeping of fowl, bees, and goats, and allows for limited sales of home produced products in residential areas. The next area of focus for the City that the community has requested is greater access to community gardens.

The City of Lawrence has a strong local food movement and a Douglas County Food Policy Council that advises the City and County on local government policies to encourage a local food economy. In 2011, the City of Lawrence created the Common Ground Program, a community gardening and urban farming program that utilizes vacant, city-owned properties. The City offers a free lease to residents who are interested in creating community gardens or urban farms within the city limits. In the past three years the program has expanded to eight food-producing sites for a total of six acres in production. These creative, community-led projects range from community gardens in neighborhoods to orchards along bike trails to student farms. Common Ground has helped the City connect with the nonprofits and schools doing food system work in the community, and helped increase access to homegrown food in the city's "food deserts."

The Douglas County Food Policy Council is currently working on their 2015-2016 workplan, to outline key food policy initiatives to support. The Council is currently focused on economic development and food insecurity topics, but are looking to expand into urban agriculture policies such as the ones recently adopted in Fayetteville, AR.

Support for local foods in Columbia, MO is also a result of strong community advocacy. In 2010, the city enacted its "Chicken ordinance", allowing residences to have 6 chickens on residential lots. This was at the push of local urban agriculture advocates like Columbia Garden Coalition and Columbia Center for Urban Agriculture. Columbia also participated with St. Louis and Kansas City in a successful USDN Innovation Fund project that produced a scan and dynamic website of urban agriculture policies and resources of North American cities. Many aspects of urban agriculture and community gardens address goals and guiding principles of the Columbia Imagined Comprehensive Plan and the Mayor's Climate Protection Agreement. Following the success of the Unite4Health community garden adjacent to the Health Department, the City of Columbia is interested in increasing community gardens or urban agriculture sites offered on City-owned property. The City's hope is that implementing programs and plans of peer cities will assist the city of Columbia in fulfilling its goals, principles, objectives and priorities outlined in these plans.

Fayetteville, Columbia and Lawrence are very similar in many ways. Geographically they are located in similar growing regions within the breadbasket of America. Demographically they are progressive mid-sized college communities with growing local foods movements and strong support for Urban Agriculture.

Proposed Exchange Summary
Representatives from the Cities of Fayetteville and Columbia will travel to Lawrence in late August 2014 to:

- Discuss and tour Lawrence's Common Ground – Community Garden Program

- Review and share Urban Agriculture Policy
- Discuss strategic partnerships with local food advocacy groups and their methods of success.
- Review health impacts of urban agriculture and community gardens.

Participating cities and staff
Five City of Fayetteville and five City of Columbia representatives will travel to Lawrence at the end of August (tentatively scheduled for August 25th – 27th).

Fayetteville
- Peter Nierengarten, Director – Fayetteville Sustainability and Resilience Dept.
- Kristina Jones, Project Coordinator – Fayetteville Sustainability and Resilience Dept.
- Byron Humphrey, Maintenance Superintendent - Fayetteville Parks & Rec Dept.
- Don Bennett, Executive Director - Tricycle Farms (non-profit)
- Adrienne Shaunfield, Executive Director – Feed Fayetteville (non-profit)

Coumbia
- Barbara Buffaloe, City of Columbia Sustainability Manager
- Mike Heimos, City of Columbia Stormwater Educator
- Bill McKelvey, Columbia Garden Coalition president (non-profit)
- Adam Saunders, Columbia Center for Urban Agriculture (non-profit)
- Mike Snyder, Columbia Parks and Recreation Park Development Superintendent

Lawrence
- Eileen Horn, City/County Sustainability Coordinator
- Amy Miller, Assistant Director of Planning and Development Services
- Ernie Shaw, Director of Lawrence Parks and Recreation Department
- Jill Elmers, Chair of the Douglas County Food Policy Council
- Bob Schumm, City Commissioner, Supporter of Common Ground Program
- Chris Tilden and Charlie Bryan, Douglas County Community Health Planners
- Garden and farm coordinators from the 8 Common Ground sites

Other participants may include:
- Members of the Douglas County Food Policy Council
- Members of the City of Lawrence Sustainability Advisory Board
- Livewell Lawrence Coalition (through the Lawrence-Douglas County Health Dept)

Grant requested
We request a maximum of $2,465 to enable five City of Fayetteville and five City of Columbia representatives to travel to Lawrence.

Meeting topics
1) **Common Ground Tour** – Group will tour 4 different community gardens in the Common Ground program. The goal of the tours is to give participants an opportunity to experience different types of gardens and to interact with garden managers/farmers. Topics include but are not limited to:
    - Structure and governance for each garden
    - Connections with neighborhood associations, nonprofits, academic institutions
    - Factors that determine which sites are fit for land-lease programs, etc.

2) **Common Ground Program Details** - What are the details related to how the Common Ground program operates? The primary goals of this session are to help participants understand the legal, financial and organizational structure of the program. Topics include but are not limited to:
    - How to do outreach and recruit potential program partners
    - How to identify appropriate properties
    - Infrastructure supports (i.e. access to water)

- How to identify and solicit non-profit partners through application process
- Lease structure and requirements
- Legal and insurance requirements
- Lessons learned and best practices

3) **Urban Agriculture Policy** – What are the history and details of the new Fayetteville's Urban Agriculture Ordinance? The goal of this session is to help participants understand the steps and strategies involved with this year-long policy development process. Topics include but are not limited to:
    - History of ordinance development
    - Stakeholder engagement process
    - Public outreach/participating
    - Ordinance highlights and implementation

4) **Garden Partnerships (municipal, non-profits, neighborhoods, health departments, etc.)** How do the community garden and urban agriculture groups in Columbia manage their operations and partnerships with others? The goal of this session is to give partners and City staff from Fayetteville and Lawrence ideas to increase the success of their local food advocates through strategic partnership. Examples include, but are not limited to:
    - Successful operational management - especially of the volunteer Community Garden Coalition that has been successful since 1983 and non-profit Columbia Center for Urban Agriculture (CCUA)
    - Partnerships with community action agencies, school districts, and housing authorities
    - Partnerships with for-profits and homeowners to establish financial base
    - Partnerships with local health organizations and municipal staff to achieve mutual benefits from different strategic priority areas

5) **Health Impact Discussion** - Participant cities will discuss how the health impacts of community gardens are measured. How do we know that they are having an impact on human health and addressing our cities' "food deserts"? What tools can cities use to track the impacts of community garden programs?

In addition, the group may substitute (or add) a School Garden Tour as part of their activities on the second day. School gardens are becoming increasingly popular and could benefit from increased coordination with nearby community gardens.

Pre-meeting preparation
In advance of the meeting, we will share background documents and arrange 1-2 conference calls to review what steps have been taken to date as well as future plans. These pre-meeting discussions will ensure that all participants are familiar with the status, goals and details of each development, and enable us to engage in detailed discussions of the topics outlined above immediately upon arrival. Specific conversations in advance of the meeting will include an overview of the Urban Agriculture Policies and Community Gardens in each community.

Additional participants: USDN member cities Kansas City, Oklahoma City, St. Louis and Lincoln will be informed of the meeting and invited to participate.

Meeting Plan: Detailed schedule

	DAY 1
6:00 PM	Fayetteville and Columbia Staff arrive in Lawrence
7:00 PM	Networking Dinner
	DAY 2
7:30 AM	Meet for Breakfast
8:15 AM	Van Pick-up for Common Ground Garden Tours (Leader: Eileen Horn, Lawrence)
8:30 AM	Garden 1 Tour (tbd)
9:15 AM	Garden 2 Tour (tbd)
10:00 AM	Garden 3 Tour (tbd)
11:00 AM	Common Ground Tour Debrief (Leader: Eileen Horn, Lawrence)
12:00 PM	Working Lunch
1:00 PM	Common Ground Program Details (Leader: Eileen Horn, Lawrence)
2:45 PM	Break
3:00 PM	Urban Agriculture Policy Discussion (Leader: Peter Nierengarten, Fayetteville)
5:15 PM	Break
6:30 PM	City Council Introduction
7:00 PM	Networking Dinner with Douglas County Food Policy Council
	DAY 3
7:30 AM	Meet for Breakfast
8:15 AM	Van Pick-up for Common Ground Garden Tours (Leader: Eileen Horn, Lawrence)
8:30 AM	Garden 4 Tour (tbd)
9:30 AM	Community Garden Efforts, Partnering w/ Non-Profits (Barbara Buffaloe, Columbia)
11:15 PM	Break
11:30 PM	Health Impact Assessment of Urban Agriculture and Community Gardens (Leader: Chris Tilden, Lawrence)
12:30 PM	Working Lunch and Debrief
2:00 PM	Departure for Fayetteville and Columbia

Proposed Outcomes

The exchange with Fayetteville, Columbia and Lawrence will help staff from each City move forward with progressive Urban Agriculture Policies and successful community garden programs. Proposed deliverables are:

- Better understanding by individual cities of ways to promote community gardens and develop successful urban agriculture policy
- After-Action report and Crystal Ball report
- Report to the Sustainable Food Systems Group (written and via phone conference, if desired)

Grant management

The City of Fayetteville will act as lead applicant and administer all funds associated with the grant.

Project Budget

Description	Cost	Quantity	Total	Notes
Van Rental	$150	2	$300	Van for 2 morning tours
Hotel	$125	10	$1,250	10 people, 2 nights
Per diem	$61	15	$915	15 people, 2 days
		Total Request	**$2,465**	

Timeline (including meeting, After-action report and Crystal Ball Report)

June – July 2014	Preparatory calls, exchange of documents, briefing of staff participants from all cities on details of the projects.
Late-July	Conference call to finalize agenda
August 25th – 27th	1.5 day meeting
Late September	Submission of After-Action and Crystal Ball reports

City of Fayetteville Item Review Form

2014-0282

Legistar File Number

July 15, 2014

City Council Meeting Date - Agenda Item Only

N/A for Non-Agenda Item

Yolanda Fields

Submitted By

Development Services

Department

Action Required:

Approval of the purchase order for a moderate rehabilitation project at 1211 N. Starr Dr. as part of the CDBG Housing Program

Does this item have a cost? Yes

$38,190.00	$482,037.00	Contract Services
Cost of this request	Category or Project Budget	Program or Project Name
2180.4940.5315.00	$88,138.84	Housing Services
Account Number	Funds Used to Date	Program or Project Category
62123.1404	$355,708.16	Community Development
Project Number	Remaining Balance	Fund Name

Budgeted Item? Yes **Budget Adjustment Attached?** No

V20130812

Previous Ordinance or Resolution # _____

Original Contract Number: _____

ENTERED 7/1/14

ENTERED 7/1/14

Comments:

Chighron for Jeremy Pate 7/1/14

Paul A. Becker 7-1-2014

Don Marr 7-2-14

CITY OF Fayetteville ARKANSAS

CITY COUNCIL AGENDA MEMO

MEETING OF JULY 15, 2014

TO: Mayor and City Council

THRU: Jeremy Pate, Dir. Development Services

FROM: Yolanda Fields, Dir. Community Services

DATE: June 24, 2014

SUBJECT: **Approval of Purchase Order for Community Resources Division**

RECOMMENDATION:
Staff recommends approval of the attached purchase order for the housing project located at 1211 N. Starr Dr.

BACKGROUND:
Community Resources has deemed the $38,190 housing rehabilitation project cost necessary in order to fully rehabilitate the home located at 1211 N. Starr Dr.

DISCUSSION:
In December 2013, a Fayetteville home-owner applied for a housing rehabilitation project on their home at 1211 N. Starr Dr. After verifying that the owner qualified for the program by being within the low-income population, Community Resources conducted an environmental review of the property, performed an assessment of the property, and completed a dwelling assessment on the property. The housing structure was deemed stable, livable, and eligible for rehabilitation.

In June 2014, the bid for the rehab project was advertised in the local newspaper and emails were sent out to contractors with the bid packet attached. Only one contractor, Evans Construction & Remodeling, placed a bid on the entire project. There was an additional bid by another contractor which was deemed incomplete and ineligible.

BUDGET/STAFF IMPACT:
Project cost is $38,190

Attachments:
Purchase Order
Receipt of Bids and Bids
Bid Invitation Packet

RESOLUTION NO. _____

A RESOLUTION TO AUTHORIZE A CONTRACT WITH EVANS CONSTRUCTION AND REMODELING, LLC IN THE AMOUNT OF $38,190.00 FOR COMMUNITY DEVELOPMENT BLOCK GRANT REHABILITATION OF AN ELIGIBLE RESIDENCE LOCATED AT 1211 N. STARR DRIVE

BE IT RESOLVED BY THE CITY COUNCIL OF THE CITY OF FAYETTEVILLE, ARKANSAS:

Section 1. That the City Council of the City of Fayetteville, Arkansas hereby authorizes a contract with Evans Construction and Remodeling, LLC in the amount of $38,190.00 for Community Development Block Grant rehabilitation of an eligible residence located at 1211 N. Starr Drive.

PASSED and **APPROVED** this 15th day of July, 2014.

APPROVED:

By: _____
LIONELD JORDAN, Mayor

ATTEST:

By: _____
SONDRA E. SMITH, City Clerk/Treasurer

City Of Fayetteville - Purchase Order (PO) Request

(Not a Purchase Order)

All purchases under $2500 shall be used on a P-Card unless medical or 1099 service related. (Call x256 with questions)

All PO Request shall be scanned to the Purchasing e-mail: Purchasing@ci.fayetteville.ar.us

Requisition No.:	Date: 6/25/2014
P.O Number:	Expected Delivery Date: ASAP
Vendor #: 19403	Vendor Name: Evans Construction & Remodeling LLC
Mail Yes:__ No:____	
Address: 1123 Crutcher St.	Fob Point:
Taxable Yes: No:____	Quotes Attached Yes:__X___ No:_____
City: Springdale	State: AR
Zip Code: 72764	Ship to code:
Divison Head Approval:	
Requester: Cherrell Lee	Requester's Employee #: 3386
Extension: 8260	

Item	Description	Quantity	Unit of Issue	Unit Cost	Extended Cost	Account Numbers	Project/Subproject #	Inventory #	Fixed Asset #
1	Moderate Rehabilitation at 1211 N. Starr Dr.	1		38,190.00	$38,190.00	2180.4940.5315.00	62123.1404		
2					$0.00				
3					$0.00				
4					$0.00				
5					$0.00				
6					$0.00				
7					$0.00				
8					$0.00				
9					$0.00				
10					$0.00				
*	Shipping/Handling		Lot		$0.00				

Special Instructions:

Subtotal:	$38,190.00
Tax:	
Total:	$38,190.00

Approvals:

Mayor: _____ Department Director:_____ Purchasing Manager: _____

Finance & Internal Services Director: _____ Budget Manager: _____ IT Manager:_____

Dispatch Manager:_____ Utilities Manager:_____ Other:_____

Revised 1/2/2008

CITY OF Fayetteville ARKANSAS
COMMUNITY DEVELOPMENT BLOCK GRANT PROGRAM

RECEIPT OF BIDS

OWNER(S): City of Fayetteville

ADDRESS: 1211 N. Starr Dr. PROJECT No: 62123-1404

PROJECT TITLE: Moderate Rehabilitation of Residential Building

BID CLOSING DAY/DATE/TIME: June 23, 2014, 4:00 P.M.

CONTRACTOR: Evans Construction & Remodeling BID AMOUNT: $38,190

CONTRACTOR: Ozark Mountain Glass BID AMOUNT: _____
Bid on only 1 piece of project (incomplete)
did not meet requirements

CONTRACTOR: _____ BID AMOUNT: _____

CONTRACTOR: _____ BID AMOUNT: _____

CONTRACTOR: _____ BID AMOUNT: _____

Certified by: [signature] Date: 6/23/14

Witness: [signature] Date: 6/23/2014

CITY OF Fayetteville ARKANSAS

STANDARD BID PROPOSAL FORM

PROJECT NUMBER: 62123-1404 **DATE ISSUED:** 06-9-2014

DATE AND TIME OF OPENING: Monday, 4:00 pm, June 23, 2014

OWNER'S NAME: City of Fayetteville

PROJECT ADDRESS: 1211 N. Starr Dr., Fayetteville, AR 72701

ATTENTION

The City has the right to select which of the items listed below will be completed based on the amount of funds available.

*In blanks below please quote price for each item and the total for project at the bottom.

A) Flooring: 4,000

B) Walls, Trim & Paint: 2,410

C) Insulation: 1400

D) Windows & Doors: 9,405

E) Plumbing: 2,200

F) Electrical: 405

G) Venting: 300

H) Exteriors: 15,400

I) Cleanup: 500

J) Other: 2,170

MY TOTAL BID PRICE FOR THIS PROJECT IS $ 38,190.00

Upon signing this Bid, the bidder certifies that they have viewed the property, read and agree to the requirements set forth in this bid proposal, including specifications, terms and standard conditions, and pertinent information regarding the articles being bid on, and agree to furnish these articles at the prices stated.

Complete Business Address:

Name of Firm: Evans Construction + Remodeling LLC Phone # (479) 530-0801

Residential Contractor's License number 0204640814

Street address or P.O. Box 1123 Crutcher St

City / State/ Zip Code Springdale, AR 72764

Printed Name: Randall Evans

Signature: [signature] Title: President

CITY OF Fayetteville ARKANSAS

STANDARD BID PROPOSAL FORM

PROJECT NUMBER: 62123-1404 **DATE ISSUED:** 06-9-2014

DATE AND TIME OF OPENING: Monday, 4:00 pm, June 23, 2014

OWNER'S NAME: City of Fayetteville

PROJECT ADDRESS: 1211 N. Starr Dr., Fayetteville, AR 72701

ATTENTION

The City has the right to select which of the items listed below will be completed based on the amount of funds available.

*In blanks below please quote price for each item and the total for project at the bottom.

A) Flooring: _____

B) Walls, Trim & Paint: _____

C) Insulation: _____

D) Windows & Doors: Supplier- Mid West Window + Door 10,500.00

E) Plumbing: _____

F) Electrical: _____

G) Venting: _____

H) Exteriors: _____

I) Cleanup: included in total price ☺

J) Other: _____

MY TOTAL BID PRICE FOR THIS PROJECT IS $ 10,500.00

Upon signing this Bid, the bidder certifies that they have viewed the property, read and agree to the requirements set forth in this bid proposal, including specifications, terms and standard conditions, and pertinent information regarding the articles being bid on, and agree to furnish these articles at the prices stated.

Complete Business Address:

Name of Firm: Ozark Mountain Glass Inc. Phone # 479-283-6341

Residential Contractor's License number 0242140513

Street address or P.O. Box 2231 North Lowell St. Suite D1

City / State/ Zip Code Springdale, Ar 72764

Printed Name: Kaci Alterici

Signature: Kaci Alterici Title: HR- Estimator - VP

CITY OF
Fayetteville
ARKANSAS

CITY OF FAYETTEVILLE

113 W. Mountain St.
Fayetteville, AR 72701

INVITATION TO BID

Bid# 62123-1404

Community Resources Division
(479) 575-8240

BID#: 62123-1404

DATE ISSUED: 06-9-2014

DATE & TIME OF OPENING: Monday, June 23, 2014 4:00pm

CONTACT: Kyle Belt—(479) 575-8240

CITY OF
Fayetteville
ARKANSAS

INVITATION TO BID

DATE ISSUED: June 9, 2014

RECEIPT OF BIDS: Monday, 4:00 pm, June 23, 2014
Community Resources Division
125 West Mountain Street
Fayetteville, AR 72701

COMMUNITY DEVELOPMENT PROGRAMS ADMINISTRATOR:
Kyle Belt
CDBG Programs Administrator
113 West Mountain Street
Fayetteville, Arkansas 72701
Phone (479) 575-8240

BRIEF SCOPE OF PROJECT: Flooring repairs, wall changes and repairs. Drywall and paint repairs. Add some trim. Add floor insulation and vapor barrier. Replace windows and doors. Plumbing, electrical, and venting changes. New deck, siding, and gutters. Repair storage room roof. Cleanup and trash removal.

PROJECT NUMBER: 62123-1404

PROJECT LOCATION: 1211 N. Starr Dr., Fayetteville, AR 72701

CITY OF FAYETTEVILLE: The City of Fayetteville encourages participation of small, minority and women owned business enterprises in the procurements of goods, services, and construction, either as a general contractor or subcontractor. The City is an affirmative action / equal opportunity employer. Section 55.55 prohibits discrimination against qualified individuals because of their handicapped status.

GENERAL: A copy of the Specifications is available at the Community Resources Division's office.

****** **Attention! New Requirements!** ******

- **New permitting requirements, please see attached**
- **Any bid of $20,000 or over must be accompanied by a certified check or bid bond in an amount not less than five percent (5%) of the amount bid.**
- **A one hundred percent (100%) performance and payment bond is required with a contract awarded amount of over $20,000 and filed with the Washington County Circuit Clerk.**
- **A State of Arkansas Residential Contractor's License is required for ALL bids.**

CITY OF
Fayetteville
ARKANSAS
COMMUNITY DEVELOPMENT BLOCK GRANT PROGRAM

SPECIAL TERMS AND CONDITIONS

1. All bids shall be submitted in a sealed envelope and must be submitted on forms provided by the city. No employees of the Community Resources Division are allowed to fill out bid sheets for Contractors.

2. The company or contractor name and project # shall be stated on the face of the sealed bid envelope.

3. Bidders shall include all applicable local, state, and federal sales tax in the bid. The responsibility of payment shall remain with the successful bidder.

4. Prices shall include all labor, materials, profit, insurance, etc., to cover the furnishing of the items of the bid.

5. Bids received after the date and time set for receiving bids will not be considered.

6. The Owner reserves the right to accept or reject any and all bids, waive formalities in the bidding and make a bid award deemed to be in the best interest of the Owner. The Owner shall be able to purchase more or less than the quantity indicated subject to availability of funds.

7. The bid price shall remain good and firm for a period of thirty (30) calendar days from bid opening date; however, the prices may remain firm for a longer period of time if mutually agreeable between bidder and the Owner.

8. All products delivered shall comply with applicable standards of quality.

9. Any exceptions to the requirements of the City of Fayetteville must be noted on the Bid Form or on an attached form.

10. In the event of two or more identical low bids, the contract may be awarded arbitrarily or for any reason to any such bidders, at the discretion of the Owner.

11. **The Contractor is to supply the City with evidence of the following:**

    1) **Current and valid Certificate of Liability Insurance that includes coverage for a) Workman's Compensation and Employer Liability in accordance with the laws of the State of Arkansas, b) Commercial General Liability that covers public liability and property damage and c) Automobile Liability, if applicable. All premiums and**

costs shall be paid by the Contractor. In no way will the Owner be responsible in case of accident.

2) **Current and valid license from the State of Arkansas Contractors Licensing Board.**
3) **EPA/HUD Approved Lead Safety Training Program certification.**

12. Specifications furnished with this invitation are intended to establish a desired quality or performance level, or other minimum dimensions and capacities, which will provide the best product at the lowest possible price. Other than designated brands and/or models approved as equal to designated products shall receive equal consideration.

13. The City reserves the right to request any additional information it deems necessary from any or all bidders after the submission deadline.

14. Quality, time and probability of performance may be factors in making an award.

15. Any ambiguity in any bid as a result of omission, error, lack of clarity or non-compliance by the bidder with specifications, instructions, and all conditions of bidding shall be construed in the light most favorable to the Owner.

16. Bidders must provide the City with their bids signed by an employee having legal authority to submit bids on behalf of the bidder.

17. The request for bid is not to be construed as an offer, a contract, or a commitment of any kind; nor does it commit the city to pay for any costs incurred by bidder in preparation of bid.

18. Bids must be hand delivered or received by mail in the Community Resources Office, 125 West Mountain St. Fayetteville, and AR. 72701, on or before the time of closing listed on the Bid Form. Under no circumstances will faxed bids be allowed.

19. The successful bidder will be required to enter into a contract with the Owner and shall provide a certificate of insurance to the Community Resources Division within ten (10) days of notice of bid award.

20. In the event a contract is entered into pursuant to the "Invitation to Bid", the bidder shall not discriminate against any qualified employee or qualified applicant for employment because of race, sex, color, creed, national origin, or ancestry. The bidder must include in any and all subcontracts a provision similar to the above.

21. The contractor must be prepared to commence work on start date per Notice to Proceed issued by the City Community Resources Division, and must complete the work within Thirty (30) calendar days. Exceptions as noted in the Rehabilitation Contract.

CITY OF Fayetteville ARKANSAS

COMMUNITY DEVELOPMENT BLOCK GRANT PROGRAM

22. A Maximum of three payments may be made on each Housing Rehabilitation Project. Upon satisfactory completion of 40% of the work and submission of proper documentation, 30% of the contract amount may be released to the contractor with 10% being held as retainer. Upon satisfactory completion of 70% of the work and submission of proper documentation, 60% of the contract amount may be released to the contractor with 10% being held as retainer. Final payment shall be made after satisfactory completion and acceptance of the project. Retainers shall be released with the final payment.

23. A certificate of final inspection by the City of Fayetteville's Building Safety Division must be performed before the release of the final check.

24. Any construction material containing Lead-Based Paint (LBP) shall be removed by workers certified in LBP Interim Controls and with adherence to the current HUD Regulation on LBP Hazards.

CITY OF
Fayetteville
ARKANSAS
COMMUNITY DEVELOPMENT BLOCK GRANT PROGRAM

Residential Permit Application and Plan Review Requirements

The following shall be the submittal requirements:

- **Completion of the Master Permit application and review before any work starts.**
- **"CDBG" will be entered in the Description of Work field.**
- **Specification sheets will be submitted with the application.**
- **CDBG fee waiver sheet for the application process. (Provided by CDBG Staff)**
- **A site plan of the property drawn to scale will be submitted according to permitting procedures.**
- **A floor plan drawn to scale will be submitted indicating where changes to the structure are to occur. This can be done in two parts as before and after with 8 ½ x 11 plans.**
- **The Master permit must be issued before any other permit may be applied for.**

Highland Home Builder, Inc.
Bruce Kerr 479-903-0966
Community Resources Spec writer
brucegkerr@netzero.com
Community Resources Division

HIGHLAND
Home Builder, Inc.

MODERATE HOUSING REHABILITATION PROJECT

Scope of Project: Flooring repairs, wall changes and repairs. Drywall and paint repairs. Add some trim. Add floor insulation and vapor barrier. Replace windows and doors. Plumbing, electrical, and venting changes. New deck, siding, and gutters. Repair storage room roof. Cleanup and trash removal.

Owner's Name: Sandra Vann **Phone:** 479-443-3312

Project Location: 1211 N Starr Dr, Fayetteville AR

Project #62123-1404

Administrator: Kyle Belt Phone: 479-575-8240 Fax: 479-444-3445

Contractors Description of Work:
Minimum requirements for bidder: Proof of current Arkansas Residential Contractor's license (or Commercial Contractor's license if required by law) which is provided by the State of Arkansas Contractors Licensing Board, Certificate of Liability Insurance, and a statement of Completion of EPA/HUD Approved Lead Safety Training if applicable.

GENERAL:

The contractor will be responsible for all aspects of the construction, installation, repairs, and cleanup as stated in the Scope of Work and Specifics at the project location stated above. Each bidder will be responsible for a complete inspection of the property at the project location before submitting bid. Give occupant 24 hour notice before inspection. All the distances, measurements, procedures, and listed materials should be verified before submitting your bid to complete the work. The requirements listed here, in the description of work, are general requirements and it will be the responsibility of the winning bidder to assure the City of Fayetteville that the finished project is in compliance with all applicable codes and standards and achieves the goal of raising the efficiency of the building.
The contractor's duties and responsibilities include, but are not limited to, the following:
1) Purchasing of all materials.
2) Supervision of all employees and subcontractors.
3) Coordination with the City of Fayetteville CDBG Administrator, the City of Fayetteville Code Compliance Office and owners.
4) Project design.
5) Clean and restore all lawns, planters, walking and driving surfaces to original condition.
6) Keep job site safe for others and practice safe working practices as required.

SPECIFICS:

A: FLOORING

A - 1 The kitchen floor has a bad spot in the middle of the floor. Remove the temporary covering over the area.

A - 2 Replace any bad joists and replace the affected subfloor with the same thickness material.

A – 3 Remove the other old flooring in the kitchen and breakfast area and prepare it for new flooring.

A – 4 Install new vinyl flooring in the kitchen and breakfast and in the front bathroom off the left front bedroom. Have the customer approve a color and pattern.

B: WALLS, TRIM, AND PAINT

B - 1 The bedroom and bathroom have some bad spots in the ceiling from old leaks in the roof. Repair the drywall.

B - 2 In the back bathroom, extend the half wall next to the tub to go to the ceiling. Demo any old tile around the tub. Add drywall to the new wall. Repair any other drywall around the tub that has been damaged by water from the tub.

B - 3 Mud and texture all new drywall and repaired areas to match surrounding ceiling or walls. Make any needed drywall repairs needed as windows and doors are installed.

B – 4 Add baseboards to the front bathroom that is off the front left bedroom. Repair or replace any trim needed around doors or windows that were changed out.

B – 4 Paint patched ceiling areas, newly drywalled walls, and new trim added to match the surrounding ceiling, walls and trim.

B – 5 Remove old drywall from the walls and ceiling of the storage room on the left side of the home. The walls will be left as bare stud walls.

C: INSULATION

C – 1 Add floor insulation between the joists in the crawlspace.

C – 2 Add a vapor barrier to the dirt floor in the crawlspace.

D: WINDOWS AND DOORS

D – 1 All windows and slider doors added will be white vinyl with Energy Star rating for efficiency. Replace the three slider doors on the exterior walls only in the porch and the one to the back of the home. Replace the back bathroom window and all the bedroom windows with side slide windows. Replace the front half bath window with a single hung window. The two windows on either side of the fireplace should be replaced with single hung windows if possible or picture windows. All opening windows should be complete with screens.

D – 2 Replace the 32 inch door exiting the left side of the home with a new 6 panel steel door with double bore. Reinstall the hardware or buy new hardware to provide a door handle and deadbolt. They should be keyed alike and the keys given to the homeowner.

E: PLUMBING

E – 1 Add a new toilet in the half bathroom off the left front bathroom using a new wax seal.

E – 2 In the back bathroom add a new shower/tub faucet. The shower head needs to be a removable hand wand. Add a new plastic surround above the existing tub. Add new safety grab bars on the side and back wall to assist the homeowner to get into the shower. Add any needed supports in the wall to make the grab bars sturdy.

E – 3 Add a submersible pump to the area of the water heater in the crawlspace. The pump should be positioned so the water will not rise above to reach the water heater. (It has been flooding it and putting out the pilot light) Put the pump in a container to keep the dirt out and dig the pump down if needed. Have the water pumped to an area outside the block foundation where it will flow down the hill behind the home.

F: ELECTRICAL

F – 1 Provide a source of electricity for the pump in the crawlspace and make any needed connections.

F – 2 Remove and reinstall the light fixtures around the home to accommodate the installation of the vinyl siding. Install a new exterior light outside the door on the left side of the home. Detach and reattach any other possible electric components outside the home for the installation of the siding.

G: VENTING

G – 1 Replace the piping to the dryer vent. It currently is clogged with lint. It should be vented to the outside with the appropriate vent on the outside wall that has a flap that closes when not used.

G – 2 Disconnect the HVAC vent that goes to the storage room on the left side of the home that is accessible from the parking pad.

H: EXTERIORS

H – 1 Remove the remaining roof that was once part of the carport. The roof should remain over the storage area on the left of the home. Add any structure needed to add a soffit and fascia around the storage room. Demo the old handrail on the parking pad on the left side of the home.

H – 2 Make any repairs, remove any trim in the way, and cut away any vines that are moving up the home that has been doing damage.

H – 3 Replace any damaged crawlspace doors and paint or cover with siding.

H – 4 Add any missing foundation vents and seal any holes leading to the crawlspace to keep pests out.

H – 5 Add new vinyl siding and vinyl soffits to all exteriors of the home. Use aluminum fascia and wrap any exposed wood that cannot be covered with the vinyl siding. Have the homeowner approve any siding color and profile.

H – 6 Add seamless gutters to the home. The gutters should match the fascia color.

H – 7 Remove the old flat roofing off of the storage room roof area on the left side of the home. Replace any rotten roof joists and roof sheathing. Apply roll roofing to the roof. Add any needed flashings needed between the flat section of roof and the main roof.

H – 8 Remove back deck and stairs. Add a new deck the length of the back slider door that extends four feet out from the home. Build a new set of stairs to replace the old one. All lumber should be pressure treated wood. The deck should have bent flashing against the house to direct water away from behind the rim board that is attached to the home. Add concrete footings and all needed handrails to code. The deck should be bolted to the home and the joists should have pressure blocks between joists or joist hangers on them.

I: CLEANUP

I - 1 All new, used, and excess construction materials that relate to the job or a change order(s) belongs to the contractor and can be removed from the property by the contractor as needed during the project and shall be removed at completion.

I - 2 All trash shall be hauled off by contractor and preferably recycled if possible.

I - 3 All affected areas shall be left broom clean.

I - 4 If lead paint is present, cleanup will be compliant with EPA/HUD Approved Lead Safety standards.

J: OTHER

J - 1 All work or materials which are not directly noted in the Scope of Work and Specifics, but are necessary for the proper carrying out of the obvious intentions thereof, are to be understood as implied work and will be provided for by the contractor as if specifically described or drawn.

J - 2 All work shall be performed in a workmanlike manner according to common construction practices, according to the specifications set forth in the Community Resources Program's General Specification Manual, and with adherence to city, state, and national codes.

J - 3 Any damage to the dwelling or property caused by the contractor, his/her worker(s) or delivery person, and/or their vehicles during the project shall be repaired to like new conditions.

J - 4 Where applicable, all plumbing work shall be performed by a Arkansas State licensed plumbing contractor with adherence to the current Arkansas Plumbing Code.

J - 5 Where applicable, all electrical work shall be performed by a Arkansas State licensed electrical contractor with adherence to the current National Electrical Code.

J - 6 Where applicable, all HVAC work shall be performed under the supervision of a licensed HVAC contractor with adherence to all codes.

CITY OF
Fayetteville
ARKANSAS

STANDARD BID PROPOSAL FORM

PROJECT NUMBER: 62123-1404 **DATE ISSUED:** 06-9-2014

DATE AND TIME OF OPENING: Monday, 4:00 pm, June 23, 2014

OWNER'S NAME: City of Fayetteville

PROJECT ADDRESS: 1211 N. Starr Dr., Fayetteville, AR 72701

ATTENTION

The City has the right to select which of the items listed below will be completed based on the amount of funds available.

*In blanks below please quote price for each item and the total for project at the bottom.

A) Flooring: _____

B) Walls, Trim & Paint: _____

C) Insulation: _____

D) Windows & Doors: _____

E) Plumbing: _____

F) Electrical: _____

G) Venting: _____

H) Exteriors: _____

I) Cleanup: _____

J) Other: _____

MY TOTAL BID PRICE FOR THIS PROJECT IS $_____
Upon signing this Bid, the bidder certifies that they have viewed the property, read and agree to the requirements set forth in this bid proposal, including specifications, terms and standard conditions, and pertinent information regarding the articles being bid on, and agree to furnish these articles at the prices stated.

Complete Business Address:

Name of Firm:_____ Phone #_____

Residential Contractor's License number_____

Street address or P.O. Box _____

City / State/ Zip Code _____

Printed Name: _____

Signature:_____ Title: _____

City of Fayetteville Item Review Form

2014-0286

Legistar File Number

July 15, 2014

City Council Meeting Date - Agenda Item Only

N/A for Non-Agenda Item

Jeremy Pate

Submitted By

Development Services

Department

Action Required:

A resolution approving of an agreement with SourceGas for gas relocations related to the Spring Street Municipal Parking Deck and approval of a 20% contingency.

Does this item have a cost? Yes

$39,805.00	$6,639,754.60	Spring St Municipal Parking Deck
Cost of this request	Category or Project Budget	Program or Project Name
4560.9560.5804.00	$1,225,228.95	Building Costs
Account Number	Funds Used to Date	Program or Project Category
11028.1203	$5,374,720.65	Parking Deck Project Expenses
Project Number	Remaining Balance	Fund Name

Budgeted Item? Yes **Budget Adjustment Attached?** No

V20130812

ENTERED 6-2-2014

Previous Ordinance or Resolution #

Original Contract Number:

ENTERED 7/1/14

Comments:

for Jeremy Pate

BP - 6/30/14 (see memo)

7-1-2014

7-1-14

CITY OF Fayetteville ARKANSAS

CITY COUNCIL AGENDA MEMO

MEETING OF JULY 15, 2014

TO: Mayor and City Council

THRU: Don Marr, Chief of Staff
Jeremy Pate, Development Services Director

FROM: Chris Brown, City Engineer CB

DATE: June 26, 2014

SUBJECT: **Spring Street Parking Deck-Agreement with SourceGas for Utility Line Relocation on Spring and School due to Parking Deck Construction**

RECOMMENDATION:
Staff recommends approval of a resolution to approve an agreement with SourceGas for relocation of facilities they own along Spring Street and School Avenue that conflict with the proposed parking deck, liner building, and associated street and drainage infrastructure. The amount of the agreement is $39,804.79. The agreement obligates the City to pay the actual cost of relocations; therefore, a contingency amount of 20% ($8,000) is also recommended.

BACKGROUND:
The City of Fayetteville is constructing a parking deck in the downtown area/entertainment district on the northwest corner of School Avenue and Spring Street, adjacent to and southeast of the Walton Arts Center (WAC) facility. The objective is to relieve current parking shortfalls and to create supply in an area anticipated to see increased parking demand.

The parking deck and associated sidewalk, drainage, and street trees are in conflict with multiple utilities on the site. City staff is working with each Design on the deck is nearing completion, and the site preparation, demolition, and excavation package is out for bid. The gas line adjacent to the deck will be in conflict with the excavation in some areas and will be under the street trees for the entire frontage.

DISCUSSION:

SourceGas has presented a contract for relocation of their gas lines along Spring Street and School Avenue in the estimated amount of $39,804.79. As noted in the contract, the City is responsible for the full cost of the work, so the actual amount paid may be more or less than the estimate. Staff requests approval of a 20% contingency to cover any costs that may be in excess of the estimate.

BUDGET/STAFF IMPACT:

Funding for this work is coming from parking revenue bond proceeds and parking funds budgeted for the project.

Attachments:
Proposed SourceGas Contract
Purchase Order Request

OFFICE OF THE
CITY ATTORNEY

DEPARTMENTAL CORRESPONDENCE

Kit Williams
City Attorney

Blake Pennington
Assistant City Attorney

Patti Mulford
Paralegal

TO: **Mayor Jordan**
City Council

CC: **Kit Williams**, City Attorney

FROM: **Blake Pennington**, Assistant City Attorney

DATE: **June 30, 2014**

RE: **Utility Work Agreement with SourceGas for Relocation of Gas Lines on Spring Street Parking Deck Site**

Some portions of the proposed utility work agreement with SourceGas are contrary to City Policy IC-02 which details language that should and should not be included in City contracts. If SourceGas is unwilling to modify the contract, as I suspect they probably are, it is a policy decision by the administration and City Council whether to approve the agreement.

In Section 1, the agreement requires the City to release SourceGas from any liability for damage to city streets or lands arising out of performance of the work authorized by the agreement. IC-2.8(1), regarding unacceptable contract language and provisions notes that the City should not agree to hold harmless clauses typically because that could pierce the city's sovereign immunity. However, in this case, because it is City owned property, the City would be taking on full responsibility of fixing any damage SourceGas causes to public property.

In Section 4, the agreement provides for interest at the rate of 10 percent per annum for any invoices not paid within thirty days of receipt. IC-2.8(3) states that the City does not agree to any interest or penalty for untimely payments.

Finally, Chris Brown noted that SourceGas refused to sign the proposed agreement prior to approval by the Council and Mayor, which is contrary to IC-2.3. However, all of these are policy decisions to be made by the Council and Mayor and can be approved even with the language noted above that violates the policy, particularly since time is of the essence with this project.

RESOLUTION NO. _____

A RESOLUTION TO APPROVE A UTILITY WORK AGREEMENT WITH SOURCEGAS ARKANSAS, INC. IN THE AMOUNT OF $39,804.79 FOR THE RELOCATION OF GAS MAINS AND FACILITIES NECESSARY FOR THE SPRING STREET PARKING DECK PROJECT, AND TO APPROVE A PROJECT CONTINGENCY OF $8,000.00

WHEREAS, the Spring Street Parking Deck Project will require certain gas mains and facilities belonging to SourceGas Arkansas, Inc. ("SourceGas") to be relocated; and

WHEREAS, Ordinance No. 5542, which was passed and approved on November 20, 2012, waives the requirement of formal bidding on "all such projects necessitated by any road reconstruction or widening projects with SourceGas Arkansas, Inc. within Fayetteville until December 31, 2016".

NOW, THEREFORE, BE IT RESOLVED BY THE CITY COUNCIL OF THE CITY OF FAYETTEVILLE, ARKANSAS:

Section 1. That the City Council of the City of Fayetteville, Arkansas hereby approves a utility work agreement with SourceGas Arkansas, Inc., a copy of which is attached as Exhibit "A", in the amount of $39,805.00 for the relocation of gas mains and facilities necessary for the Spring Street Parking Deck Project, and further approves a project contingency of $8,000.00.

PASSED and **APPROVED** this 15th day of July, 2014.

APPROVED:

By: _____
LIONELD JORDAN, Mayor

ATTEST:

By: _____
SONDRA E. SMITH, City Clerk/Treasurer

SourceGas
Arkansas

UTILITY WORK AGREEMENT
(MUNICIPALITY)

Municipality: City of Fayetteville, AR
Municipality's Address: 113 W. Mountain St., Fayetteville, AR. 72701
Job Location: 229 N. School Ave., Fayetteville, AR 72701

This Utility Work Agreement ("Agreement") is made and entered into this ____ day of ____, ____, by and between City of Fayetteville (hereinafter referred to as "Municipality"), and SourceGas Arkansas Inc. (hereinafter referred to as "SourceGas").

WHEREAS, Municipality proposes to make certain improvements at the location designated above, and as a result of such improvements, SourceGas must adjust, enhance, locate, observe, and/or relocate certain of its existing facilities, or construct additional facilities; and

WHEREAS, in connection with Municipality's proposed improvements, Municipality wishes SourceGas to do the following:

Relocate 500' of existing 3" Polyethylene (P.E.) plastic pipe due to the City of Fayetteville's construction of the "Entertainment District Parking Deck" on the southeast portion of PARCEL ID 765-01733-000 of the City of Fayetteville, Board of Trustees, U of A (Walton Arts Center) property. The project will start at GPS -94.164269, 36.065626 on the west side of School Ave. and travel southward to the intersection with Spring St. at GPS -94.164297, 36.064802. From this point it will travel westward along the north side of Spring St., ending at GPS -94.164864, 36.064804 and will tie in to existing 6-inch P.E. gas line.

(hereinafter referred to as the "Work"); and

WHEREAS, such Work is shown in detail in SourceGas' plans, sketches, estimate of cost, and specifications (when applicable), which are attached to this Agreement and made a part hereof; and

WHEREAS, Municipality agrees to pay for the cost of such Work to the extent herein agreed upon.

EXHIBIT
A

SourceGas
Arkansas

NOW, THEREFORE, IN CONSIDERATION OF THE PROMISES AND OTHER VALUABLE CONSIDERATION HEREIN ACKNOWLEDGED, MUNICIPALITY AND SOURCEGAS AGREE AS FOLLOWS:

1. Where applicable hereunder by reason of new utility occupancy or crossing of Municipality's property, Municipality hereby grants to SourceGas an easement or license to install and operate utility facilities on or across Municipality's property as shown on the approved plans or sketch maps attached hereto and made a part hereof. Prior to SourceGas beginning the Work, Municipality will, at no cost to SourceGas, furnish SourceGas with all necessary easements, rights of way and permits. Those easements, rights of way and permits shall release SourceGas from any and all claims for damage done to streets, land, fences, and crops arising out of the performance of the Work.

2. Where applicable hereunder by reason of new construction on existing utility rights of way, SourceGas hereby grants to Municipality the right to use for Municipality's purposes the lands within the limits of the improvement project limits on or across which SourceGas holds a valid property interest antedating Municipality's rights which were subsequently acquired in the same lands, and which property rights SourceGas shall retain so long as SourceGas, its successors or assigns continues such use and occupancy and does not abandon, and thereby release, such property interest to Municipality through removal of facilities in performing the Work or by subsequent removal of facilities for SourceGas' convenience; and Municipality hereby agrees that SourceGas, by granting said right and by said continued joint use and occupancy, does not waive any future claim for reimbursement for any costs as may be eligible for reimbursement by reason of such prior property interest, nor does SourceGas waive any other legal or property right held under the laws or Constitution of the State of Arkansas or the United States.

3. In the event that future construction, reconstruction, expansion, relocation, rehabilitation, betterment, maintenance, or other work on the facilities owned and operated by either Municipality or SourceGas in the area jointly occupied or used under either or both Paragraphs 1 or 2 of this Agreement will disturb, detrimentally affect, interfere, or be inconvenient to the facilities or responsibilities of either party, the parties hereto shall reach agreement in writing as to locations, extent, and methods of such work before the work is undertaken. In a case of emergency, and where immediate action is necessary for the protection of the public and to minimize damage to or loss of investment in the property of Municipality or of SourceGas, either party hereto may, at its own responsibility and risk, make any necessary emergency repairs, and shall notify the other party hereto of such action as soon as practicable.

SourceGas
Arkansas

4. Municipality will pay SourceGas 100% of the actual cost of the Work. The estimated cost of the Work is $**39,804.79**. After it has completed the Work, SourceGas will bill Municipality for 100% of the actual cost of the Work. Municipality shall pay such invoice within 30 days of Municipality's receipt of the invoice. If Municipality fails to pay any such invoice within 30 days of receipt, the amount due under the invoice shall accrue interest at the rate of 10 per cent per annum until paid.

5. SourceGas will perform the Work, as described on the first page of this Agreement. SourceGas will endeavor to perform the Work within a reasonable time period, subject to applicable laws, rules and regulations of governmental authorities, and subject to any delay occasioned by lack of right of way, availability of materials and supplies, force majeure or events or conditions of whatsoever nature reasonably beyond SourceGas' control, and further conditioned upon the receipt of all required approvals and consents in form and substance acceptable to SourceGas. SourceGas shall not be obligated to commence the Work unless and until, at no cost to SourceGas, all necessary easements and rights of way have been executed, acknowledged and delivered to SourceGas in a form acceptable to SourceGas.

6. Title to and ownership of facilities which are the subject of the Work shall forever be and remain exclusively and unconditionally vested in SourceGas. Municipality understands, acknowledges and agrees that Municipality shall have no title to, interest in, or ownership of those facilities.

7. It is mutually agreed by the parties hereto that the provisions of this Agreement pertaining to property rights, right of way occupancy permission, access for servicing when applicable, and joint use of rights of way shall continue in full force and effect from the date of this Agreement, and shall be perpetually binding upon each party, and its representatives, successors and assigns.

8. Municipality and SourceGas acknowledge that there are no agreements or understandings, either written or oral, between the parties related to the Work, other than as set forth in this Agreement, and that this Agreement (including any attachments hereto) contains the entire agreement between the parties regarding the Work.

9. This Agreement shall be governed in accordance with the laws of the State of Arkansas, the rules and regulations of the Arkansas Public Service

SourceGas
Arkansas

Commission, and the Tariff of SourceGas. In the event of a conflict between this Agreement and any such laws, rules, regulations or Tariff, such laws, rules, regulations or Tariff shall control.

10. In the event SourceGas is required to initiate litigation to enforce the terms and conditions of this Agreement, then SourceGas shall have the right to recover from Municipality SourceGas' costs and expenses of such litigation, including reasonable attorney fees.

11. Municipality acknowledges that it has been afforded an opportunity to have its attorney review and explain the terms of this Agreement.

IN WITNESS WHEREOF, the parties hereto have caused this Agreement to be executed in duplicate by their duly authorized representatives on the date stated above.

SOURCEGAS ARKANSAS INC.	CITY OF FAYETTEVILLE
By:_____ Douglas Whitefoot	By: _____
Its: Sr. Vice President Operations	Its: _____

City Of Fayetteville - Purchase Order (PO) Request

(Not a Purchase Order)

All purchases under $2500 shall be used on a P-Card unless medical or 1099 service related. (Call x256 with questions)

All PO Request shall be scanned to the Purchasing e-mail: Purchasing@ci.fayetteville.ar.us

Requisition No.:

Date: **6/26/2014**

P.O Number:

Expected Delivery Date:

Vendor #: **840**

Vendor Name: **SourceGas**

Mail Yes:__ XX No:__

Address: **PO Box 13288**

Fob Point:

Taxable Yes:__ No:_XX__

Quotes Attached Yes:_____ No:___XX__

City: **Fayetteville**

State: **AR**

Zip Code: **72703**

Ship to code:

Division Head Approval:

Requester: **Chris Brown**

Requester's Employee #: **2695**

Extension: **575-8207**

Item	Description	Quantity	Unit of Issue	Unit Cost	Extended Cost	Account Numbers	Project/Subproject #	Inventory #	Fixed Asset #
1	**Building Costs**	**1**		**39,805.00**	**$39,805.00**	**4560.9560.5804.00**	**11028.1201**		
2					**$0.00**				
3					**$0.00**				
4					**$0.00**				
5					**$0.00**				
6					**$0.00**				
7					**$0.00**				
8					**$0.00**				
9					**$0.00**				
10					**$0.00**				
*	Shipping/Handling		Lot		**$0.00**				

Special Instructions:

Subtotal: **$39,805.00**

Tax:

Total: **$39,805.00**

Approvals:

Mayor: _____

Department Director: _____

Purchasing Manager: _____

Finance & Internal Services Director: _____

Budget Manager: _____

IT Manager: _____

Dispatch Manager: _____

Utilities Manager: _____

Other: _____

City of Fayetteville Item Review Form

2014-0296

Legistar File Number

July 15, 2014

City Council Meeting Date - Agenda Item Only

N/A for Non-Agenda Item

Tim Nyander

Submitted By

Utilities

Department

Action Required:

Request for approval to allow extension of the sewer service outside the City's corporate limits to a single residence located at 55 South Harvey Dowell Road.

Does this item have a cost? No

$0.00	$0.00	N/A
Cost of this request	Category or Project Budget	Program or Project Name
N/A	$0.00	Sewer Main Maintenance
Account Number	Funds Used to Date	Program or Project Category
N/A	$0.00	Water/Sewer
Project Number	Remaining Balance	Fund Name

Budgeted Item? Yes **Budget Adjustment Attached?** No

V20130812

ENTERED 6/27/14 PM

ENTERED 6/30/14 P.K

Previous Ordinance or Resolution #

Original Contract Number:

Comments:

6/30/14

Paul A. Becker 6-30-2014

6-30-14

CITY OF Fayetteville ARKANSAS

CITY COUNCIL AGENDA MEMO

MEETING OF JULY 15, 2014

TO: Mayor Lioneld Jordon
Fayetteville City Council

THRU: Don Marr, Chief of Staff

FROM: Tim Nyander, Interim Director for Water & Sewer

DATE: June 27, 2014

SUBJECT: **A Resolution To Allow Extension Of Sewer Service Outside The City's Corporate Limits To A Single Property on Harvey Dowell Road.**

RECOMMENDATION:
Staff recommends approval of the request to allow extension of the sewer service outside the City's corporate limits to a single residence located at 55 South Harvey Dowell Road.

BACKGROUND:
On June 12, 2014 the City received notification from the owner of 55 S. Harvey Dowell Road that they had been experiencing problems with their septic system since the City installed a sewer main in their driveway, front yard and field. This installation was in 2008. The owner is requesting a connection to the sewer system in lieu of repairing the septic system.

DISCUSSION:
In 2008, a contractor working for the City rerouted a 42-inch sewer pipe approximately 20 feet deep around the house located at this address. Upon visual inspection of the property it is evident that there is a failure of the septic system. The sewage is "ponding" on the surface of the ground.

BUDGET/STAFF IMPACT:
The owner will have to agree to pay all applicable tapping fees.

Attachments:
Arial Photo of property and sewer line location

OFFICE OF THE
CITY ATTORNEY

DEPARTMENTAL CORRESPONDENCE

Kit Williams
City Attorney

Blake Pennington
Assistant City Attorney

Patti Mulford
Paralegal

TO: **Mayor Jordan**
City Council

CC: **Don Marr**, Chief of Staff
Tim Nyander, Water and Sewer Director

FROM: **Blake Pennington**, Assistant City Attorney

DATE: **July 1, 2014**

RE: **Harvey Dowell Road Sewer Service Extension**

§51.113(C) of the Code of Ordinances sets forth the City's policy for extension of sewer services. That policy states:

> *Sewer extensions outside the city.* Except for facilities needed to serve property within the city's limits, such as major transmission lines and pump stations to deliver sewage to disposal sites, and except through contractual arrangements with other municipal corporations, the city's sewerage system shall not be extended outside the city's corporate limits except on the express approval of the City Council.

The City has already located a 42 inch sewer main on this property and allowing the property owner to hook into the City's line would not be difficult and the costs involved (tapping fees) would be paid by the property owner. However, since the property is located outside the corporate limits of Fayetteville and is not a facility needed to serve property within the city limits, the City Council must expressly approve this arrangement.

RESOLUTION NO. _____

A RESOLUTION TO APPROVE THE EXTENSION OF THE CITY'S SEWERAGE SYSTEM BEYOND THE CITY LIMITS TO A SINGLE RESIDENCE LOCATED AT 55 S. HARVEY DOWELL ROAD

WHEREAS, §51.113(C) **Sewer Service and Extension Policy** states that "the city's sewerage system shall not be extended outside the city's corporate limits except on the express approval of the City Council," and;

WHEREAS, the homeowners are currently experiencing a septic system failure and would be able to easily tap into the sewer main the City re-routed across their property in 2008.

NOW, THEREFORE BE IT RESOLVED BY THE CITY COUNCIL OF THE CITY OF FAYETTEVILLE, ARKANSAS:

Section 1: That the City Council of the City of Fayetteville, Arkansas hereby approves and authorizes an extension of the City's sewerage system beyond the city limits to a single residence located at 55 S. Harvey Dowell Road upon payment of all applicable tapping fees by the property owner.

PASSED and **APPROVED** this 15th day of July, 2014.

APPROVED: ATTEST:

By: _____ By: _____

LIONELD JORDAN, Mayor **SONDRA E. SMITH**, City Clerk/Treasurer

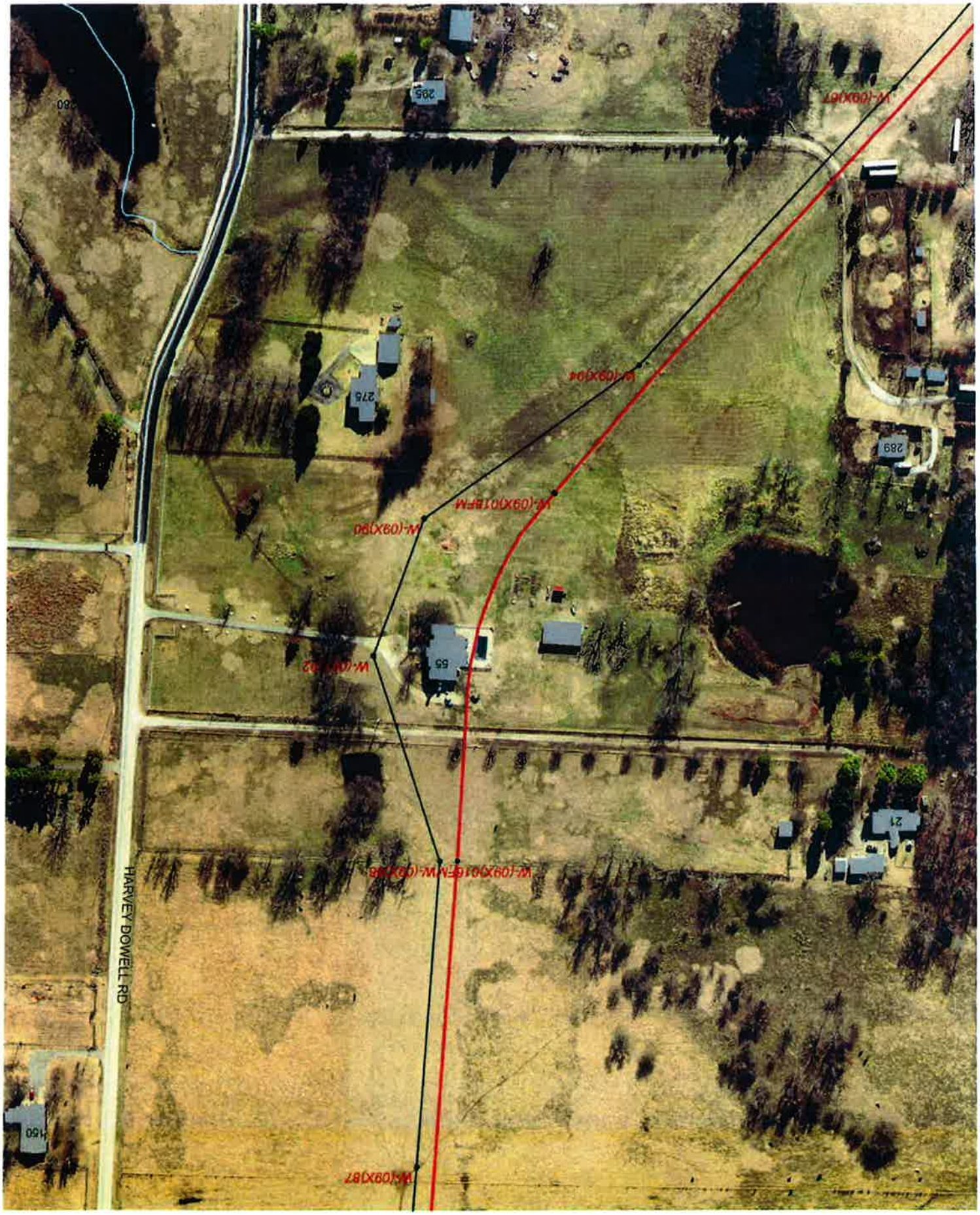
HARVEY DOWELL RD
W-(09X)87
W-(09X)01EN
W-(09X)01EM
W-(09X)90
W-(09X)94
W-(09X)87
21
55
275
289
295
280
150

City of Fayetteville Item Review Form

2014-0264

Legistar File Number

07/15/2014

City Council Meeting Date - Agenda Item Only

N/A for Non-Agenda Item

Quin Thompson

Submitted By

Development Services

Department

Action Required:

RZN 14-4703: Rezone (NORTHEAST CORNER OF WEDINGTON AND RUPPLE ROAD/WEDINGTON ZONE 2, 400): Submitted by CITY STAFF for property located at the NORTHEAST CORNER OF WEDINGTON AND RUPPLE ROAD within the Wedington Corridor Plan Area. The property is zoned C-1, NEIGHBORHOOD COMMERCIAL, C-2, THOROUGHFARE COMMERCIAL, and I-PZD, INDUSTRIAL PLANNED ZONING DISTRICT, and contains approximately 6.88 acres. The request is to rezone the property to CS COMMUNITY SERVICES.

Does this item have a cost? ☐

Cost of this request	Category or Project Budget	Program or Project Name
Account Number	Funds Used to Date	Program or Project Category
	$0.00	
Project Number	Remaining Balance	Fund Name

Budgeted Item? ☐ **Budget Adjustment Attached?** ☐

V20130812

ENTERED 6/12/14

Previous Ordinance or Resolution # _____

Original Contract Number: _____

Comments:

06-11-2014

6-12-2014

Paul A. Becker 6-12-2014

6-13-14

CITY OF Fayetteville ARKANSAS

CITY COUNCIL AGENDA MEMO

MEETING OF JULY 15, 2014

TO: Fayetteville City Council

THRU: Andrew Garner, City Planning Director ang

FROM: Quin Thompson, Current Planner

DATE: June 10, 2014

SUBJECT: **RZN 14-4703: Rezone (NORTHEAST CORNER OF WEDINGTON AND RUPPLE ROAD/WEDINGTON ZONE 2, 400):** Submitted by CITY STAFF for property located at NORTHEAST CORNER OF WEDINGTON AND RUPPLE ROAD within the Wedington Corridor Plan Area. The property is zoned C-1, NEIGHBORHOOD COMMERCIAL, C-2, THOROUGHFARE COMMERCIAL, and I-PZD, INDUSTRIAL PLANNED ZONING DISTRICT, and contains approximately 6.88 acres. The request is to rezone the property to CS COMMUNITY SERVICES.

RECOMMENDATION:
Staff and the Planning Commission recommend approval of an ordinance to rezone the property to CS, Community Services.

BACKGROUND:
The subject property is located at the northeast corner of Wedington and Rupple Road. The properties are zoned C-1, Neighborhood Commercial, C-2, Thoroughfare Commercial, and an expired I-PZD, Industrial Planned Zoning District (Westside Mini-storage) and contain a total of approximately 6.88 acres. The property directly at the northeast corner of Wedington Drive and Rupple Road is developed with a commercial strip center, the property to the north of the commercial center is a self-storage facility; the remainder of the property is undeveloped. Prior to the adoption of the Tree Preservation Ordinance, the self-storage facility was rezoned subject to a Bill of Assurance that preserved trees on the property. If the subject rezoning is approved the Bill of Assurance would be automatically removed.

Wedington Neighborhood: Since 2006, The City's comprehensive land use plan (currently known as City Plan 2030) set a goal to generate a complete neighborhood plan or corridor plan on a regular basis for key areas of the City. These plans were intended to incorporate key principles of City Plan 2030, including appropriate infill and revitalization, traditional neighborhood development, growing a livable transportation network, assembling an enduring green network, and attainable housing. On Thursday, October 25, 2012, the City of Fayetteville began the planning process for the Wedington Corridor Plan. During the week of October 25 through November 1, 2012, more than 100 citizens offered input on the vision for the Wedington Corridor Plan area during a charrette process that included a hands-on design session, an open design studio, and a work-in-progress session. The Wedington Corridor Plan was adopted by City

Council on March 19, 2013. Through this collaborative process the Wedington Corridor was envisioned as an area developed with a complete, compact and connected neighborhood including civic, residential and commercial uses. The vision document provides implementation steps for the near-term (0-5 years) and long-term (5-20 years). One of the first short-term goals identified as crucial for the implementation of the Wedington Corridor Plan is a city-initiated rezoning in key locations to enable development and re-development in traditional form and to enhance opportunities for protection of the natural environment, responsible growth, and revitalization.

Research and Planning Process: After adoption of the Downtown Master Plan, Walker Park Master Plan, and Fayette Junction Master Plan, the City of Fayetteville rezoned numerous properties within the project boundary to zoning districts that were consistent with the vision and goals of each plan. The same methodology and process is being used in the Wedington Corridor Plan Area. This area has been one of the fastest growing areas in the City of Fayetteville in the last decade, contains a significant amount of undeveloped land and continues to receive increased development pressure. When beginning the planning process for the rezoning proposal, Planning staff identified priority areas that are considered critical to the success of the Wedington Corridor Plan. The subject property is a high priority area as the intersection of Wedington/Rupple is identified as a potential location for the "heart of the neighborhood" in the plan. The subject property is currently regulated by zoning districts that are not consistent with the Wedington Corridor Plan. Based on this information, staff determined the most appropriate zoning district(s) that would bring the property into alignment with the plan and the goals of City Plan 2030.

City Plan 2030 Future Land Use Plan designates this site as the ***Complete Neighborhood Plan/Wedington Corridor Plan Area****.* The Wedington Corridor plan document and illustrative map provide a vision and a framework for transforming and taming an arterial roadway and interstate interchange while creating a more livable neighborhood that is complete and connected. The CS zoning district is consistent with planning objectives, principles, and policies put forward in the Wedington Corridor Plan. The proposed zoning is compatible and consistent with the vision for this property which calls for a variety and mix of nonresidential and residential uses in a traditional development pattern.

Notification and Public Comment: Planning staff sent letters via certified mail to each property owner, summarizing the key elements of the Wedington Corridor Plan, describing staff's rezoning proposal for the specific property and noting the public hearing date, time, and location. Planning staff also spoke with the owners of the properties proposed to be rezoned. Mr. Tobin (who owns the commercial strip center at the corner of Wedington/Rupple) objects to this rezoning, and Mr. Caudle (who owns the self-storage facility) is in favor of the rezoning.

DISCUSSION:
On June 9, 2014 the Planning Commission forwarded this item to the City Council with a recommendation of approval with a vote of 6-0-0.

BUDGET/STAFF IMPACT:
N/A

Attachments:
CC Ordinance
Exhibit A
Planning Commission Staff Report

DEPARTMENTAL CORRESPONDENCE

OFFICE OF THE
CITY ATTORNEY

Kit Williams
City Attorney

Blake Pennington
Assistant City Attorney

Patti Mulford
Paralegal

TO: **Mayor Jordan**
City Council

CC: **Don Marr,** Chief of Staff
Jeremy Pate, Development Services Director

FROM: **Kit Williams**, City Attorney

DATE: **June 12, 2014**

RE: **Loss of Bill of Assurance to protect trees that screen mini-storage units on Rupple Road**

As Planner Quin Thompson points out in his memo: "Prior to the adoption of the Tree Preservation Ordinance, the self-storage facility was rezoned subject to a Bill of Assurance that preserved trees on the property. If the subject rezoning is approved the Bill of Assurance would automatically be removed."

I believe the Bill of Assurance was offered by the owner to the City to permit his construction of mini-storage units on this once forested property. As you can see on page 22, these trees are located along the borders of the mini-storage facility to screen it from neighboring residential, commercial and mixed use property. Mini-storage unit construction became so controversial and the focus of such neighborhood opposition about a decade ago that it was placed in its own use unit (38) and not allowed in any regular residentially zoned districts, nor in R-O, Neighbor Services, Neighbor Commercial, Community Services or any Downtown Zoning districts. It is allowed in Thoroughfare Commercial (C-2), Urban Thoroughfare, Heavy Commercial, Light Industrial (I-1), and

General Industrial (I-2) **only as a Conditional Use**. Screening from neighboring lots is always a consideration {see § 163.02 (C)(3)(c)(ii)e} for a Conditional Use and would normally be required by the Planning Commission when granting a Conditional Use for a proposed mini-storage.

I believe by rezoning this parcel the existing (as required by the current Bill of Assurance) trees that at least partially screen the mini-storage facility from neighboring residential, commercial and mixed used parcels would be endangered. Hopefully, the owner would not cut down the currently protected trees, but as Quin has pointed out their protection would be lost if this rezoning is approved.

ORDINANCE NO.

AN ORDINANCE REZONING THAT PROPERTY DESCRIBED IN REZONING PETITION RZN 14-4703, FOR APPROXIMATELY 6.88 ACRES, LOCATED AT THE NORTHEAST CORNER OF WEDINGTON AND RUPPLE ROAD FROM C-1, NEIGHBORHOOD COMMERCIAL, C-2, THOROUGHFARE COMMERCIAL, AND I-PZD, INDUSTRIAL PLANNED ZONING DISTRICT WESTSIDE MINI-STORAGE TO CS, COMMUNITY SERVICES.

BE IT ORDAINED BY THE CITY COUNCIL OF THE CITY OF FAYETTEVILLE, ARKANSAS:

Section 1: That the City Council of the City of Fayetteville, Arkansas hereby changes the zone classification of the following described property from C-1, Neighborhood Commercial, C-2, Thoroughfare Commercial, and I-PZD Industrial Planned Zoning District Westside Mini-storage to CS, Community Services, as shown on Exhibit "A" attached hereto and made a part hereof.

Section 2: That the City Council of the City of Fayetteville, Arkansas hereby amends the official zoning map of the City of Fayetteville to reflect the zoning change provided in Section 1.

PASSED and **APPROVED** this day of , 2014.

APPROVED:

By: _____
LIONELD JORDAN, Mayor

ATTEST:

By: _____
SONDRA E. SMITH, City Clerk/Treasurer

EXHIBIT 'A'
14-4703

RZN14-4703

Close Up View

WEDINGTON ZONE 2

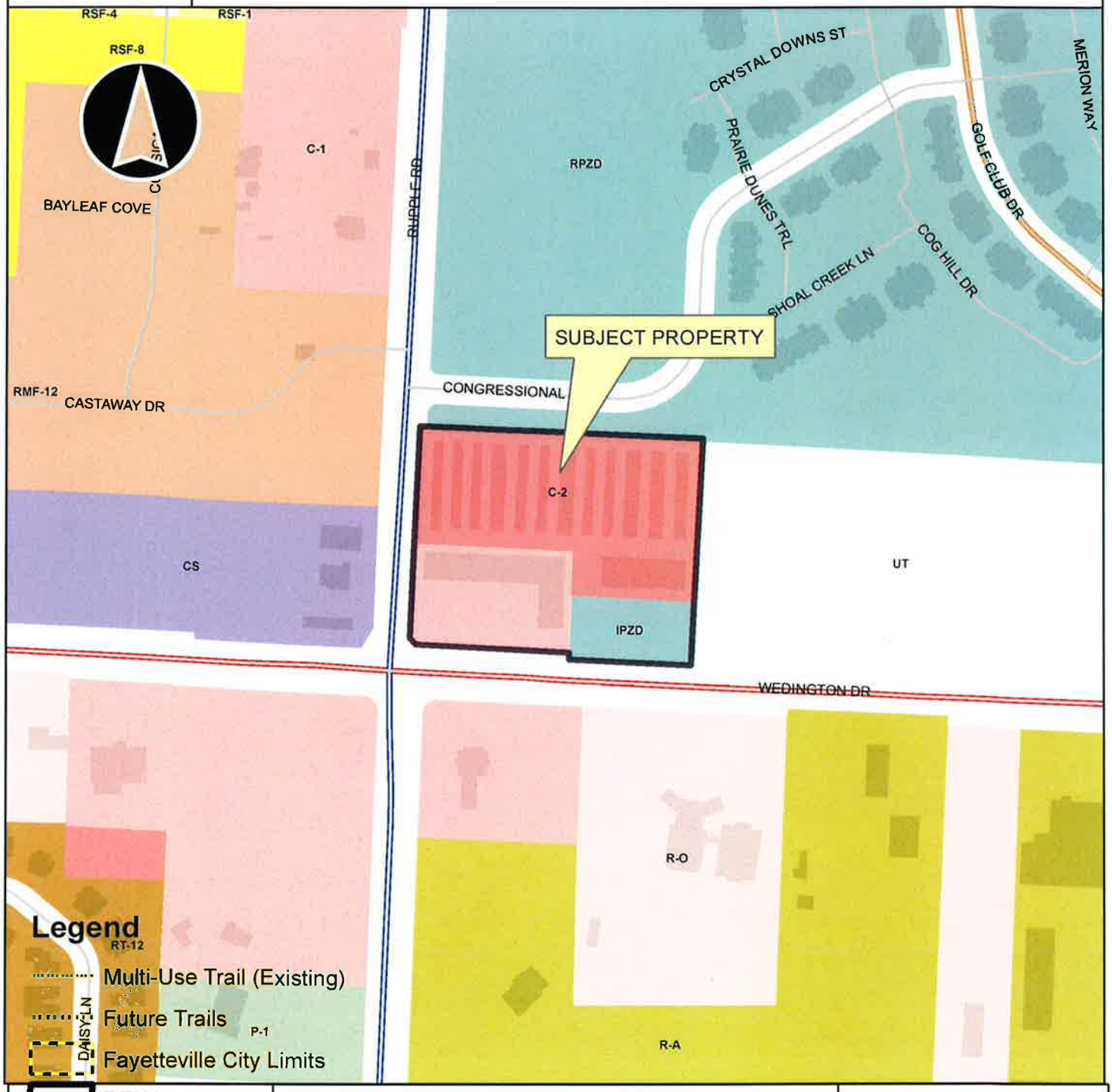

Overview

- RZN14-4703
- Footprints 2010
- Hillside-Hilltop Overlay District
- Design Overlay District
- Design Overlay District
- Planning Area

0 125 250 500 750 1,000 Feet

CITY OF Fayetteville ARKANSAS

PLANNING COMMISSION MEMO

TO: Fayetteville Planning Commission

THRU: Andrew Garner, City Planning Director

FROM: Quin Thompson, Current Planner

MEETING DATE: ~~June 09, 2014~~ Updated June 10, 2014

SUBJECT: **RZN 14-4703: Rezone (NE CORNER OF WEDINGTON AND RUPPLE ROAD/WEDINGTON ZONE 2, 400):** Submitted by CITY STAFF for property located at NE CORNER OF WEDINGTON AND RUPPLE ROAD within the Wedington Corridor Neighborhood Plan Area. The property is zoned C-1, NEIGHBORHOOD COMMERCIAL, C-2, THOROUGHFARE COMMERCIAL, and I-PZD, INDUSTRIAL PLANNED ZONING DISTRICT and contains approximately 6.88 acres. The request is to rezone the property to CS COMMUNITY SERVICES

RECOMMENDATION:
Staff recommends forwarding **RZN 14-4703** to the City Council with a recommendation for approval.

BACKGROUND:

The subject property is located north of Wedington and east of Rupple Road. The properties are zoned C-1, Neighborhood Commercial, C-2, Thoroughfare Commercial, and an expired I-PZD, Industrial Planned Zoning District (Westside Mini-storage) and contain a total of approximately 6.88 acres. The property directly at the northeast corner of Wedington Drive and Rupple Road is developed with a commercial strip center, owned by Pat and Darlene Tobin, the property to the north of the commercial center is a self-storage facility, owned by Dennis Caudle; the remainder of the property is undeveloped. Prior to the adoption of the Tree Preservation Ordinance, the self-storage facility was rezoned subject to a Bill of Assurance that preserved trees on the property. If the subject rezoning is approved the Bill of Assurance would be automatically removed. Surrounding land use and zoning is depicted on *Table 1*.

On May 12, 2014, the Planning Commission tabled this item at the request of the applicant (City of Fayetteville) to allow more time for public notification.

Table 1
Surrounding Land Use and Zoning

Direction from Site	Land Use	Zoning
North	Multi-family Residential	R-PZD, Residential Planned Zoning District
South	Bank; Airways Freight (office)	C-1, Neighborhood Commercial; R-O, Residential Office
East	Undeveloped	UT, Urban Thoroughfare
West	Gas station/office	CS, Community Services

Wedington Neighborhood: Since 2006, The City's comprehensive land use plan (currently known as City Plan 2030) has set a goal of using a charrette process to generate a complete neighborhood plans or corridor plans on a regular basis for key areas of the City. These plans were intended to incorporate key principles of City Plan 2030, including appropriate infill and revitalization, traditional neighborhood development, growing a livable transportation network, assembling an enduring green network, and attainable housing. On Thursday, October 25, 2012, the City of Fayetteville began the planning process for the Wedington Corridor Neighborhood Master Plan, a complete neighborhood plan that incorporates the key principles, goals, and objects of City Plan 2030. During the week of October 25 through November 1, 2012, more than 100 citizens offered input on the vision for the Wedington Corridor Neighborhood Master Plan area during a charrette process that included a hands-on design session, an open design studio, and a work-in-progress session.

Through this collaborative process, Wedington Corridor is envisioned as an area that integrates the built and natural environment to encourage this area to develop as a complete, compact and connected neighborhood with civic, residential and commercial uses. The vision document provides implementations steps for the near-term (0-5 years) and long-term (5-20 years). One of the first short-term goals identified as crucial for the implementation of the Wedington Corridor Plan vision is a city-initiated rezoning in key locations to enable development in traditional form and to enhance opportunities for protection of the natural environment, responsible growth, and revitalization within the area. The Illustrative Master Plan is attached to this staff report.

Research and Planning Process: After adoption of the Downtown Master Plan, Walker Park Master Plan, and Fayette Junction Master Plan, the City of Fayetteville rezoned numerous properties within the project boundary to zoning districts that were consistent with the vision and goals of each plan. The same methodology and process is being used in the Wedington Master Plan Area. The Wedington Corridor Master Plan area was one of the fastest growing areas in the City of Fayetteville in the last decade, and still contains a significant amount of undeveloped land that is expected to receive increased development pressure in the near future.

When beginning the planning process for the rezoning proposal, Planning staff identified priority areas that are considered critical to the success of the Wedington Corridor Master Plan vision. Staff found that several of those properties were regulated by zoning districts that are not consistent with the Wedington Corridor Master Plan. Based on this information, staff determined the most appropriate zoning district(s) that would bring the properties into alignment with the Wedington Corridor Master Plan and the goals of City Plan 2030.

Notification and Public Comment: Planning staff sent an letters via certified mail to each subject property owner, summarizing the key elements of the Wedington Neighborhood Plan and describing staff's rezoning proposal for the specific property and noting the public hearing date, time, and location. Sample letters are included in this staff report. Planning staff also spoke with

the property owners in the rezoning area. Mr. Tobin objects to this rezoning, and Mr. Caudle is in favor of the rezoning.

DISCUSSION:

Request: The City of Fayetteville requests to rezone approximately 6.88 acres from C-1, C-2, and I-PZD to CS, Community Services.

All land uses present at the time of rezoning will be protected under *UDC Section 164.12 Non-conforming Structures, Uses, and Lots*. The existing self-storage use would be the only use that would become a non-conforming use within the CS zone. The CS zone expands the number of uses allowed by right and by Conditional Use Permit over and above those allowed within the C-1 zone.

INFRASTRUCTURE:

Streets: The site has access to Rupple Road and Wedington Drive. Wedington Drive is a fully improved 4-lane state highway. Rupple road is fully improved at the intersection with Wedington Drive, but has open ditches on its west side at the northern property frontage onto Rupple Road. Required improvements would be determined at the time of development.

Water: Public water is accessible to the portion of the site adjacent to Rupple Road. A 6" water main is present in Rupple Road. Public water is not available to the Wedington Drive frontage and would have to be extended from the south side of Wedington Drive north to the property.

Sewer: Sanitary sewer is available to the site. A 6" main exists on the north side of Wedington Drive and an 8" main exists in Rupple Road.

Drainage: Any additional improvements or requirements for drainage will be determined at time of development. This property is not affected by the 100-year floodplain or the Streamside Protection Ordinance.

Fire: This development will be protected by Engine 7 located at 835 Rupple Road. It is 0.25 miles from the station with an anticipated response time of 1 minute to the beginning of the development. The Fayetteville Fire Department does not feel this rezoning will affect calls for service or response times.

Police: The Police Department did not have any concerns with this request.

PLANNING COMMISSION ACTION: Required

Date: June 09, 2014 ☐ **Tabled** ☒ **Forwarded** ☐ **Denied**

Motion: Chesser

Second: Autry

Vote: 6-0-0

CITY COUNCIL ACTION: Required

Date: July 07, 2014 ☐ **Approved** ☐ **Denied**

CITY PLAN 2030 FUTURE LAND USE PLAN: *City Plan 2030 Future Land Use Plan designates this site as the* ***Complete Neighborhood Plan/Wedington Corridor Plan Area****. The Wedington Corridor plan document and illustrative map provide a vision and a framework for transforming and taming an arterial roadway and interstate interchange while creating a more livable neighborhood that is complete and connected.*

WEDINGTON CORRIDOR PLAN: Wedington Corridor Illustrative Plan, approved March 19, 2013 by the City Council, identifies an area near the Rupple Road and Wedington Drive intersection as the future 'heart' of the west Wedington neighborhood, and encourages a walkable residential and commercial destination that would serve as a central node in this expanding part of the City.

Wedington Corridor Plan, pg. 37:

> At the [Wedington Corridor Design] charrette the public overwhelmingly expressed a desire to see a walkable urban center develop at the intersection of Wedington Drive and Rupple Road. At this time, a number of sizable parcels of land are undeveloped northwest of this intersection. The illustrative plan envisions this area as a complete, compact and connected neighborhood with civic, residential and commercial uses. The utilization of the City's form based zoning districts will be essential to ensure that the development pattern prescribed here is walkable and urban. Form based zoning districts are also much more flexible in allowing for a variety of residential and commercial densities and intensities. This encourages a diverse mixture of building types, scales and uses that are not separated from each other but instead are co-mingled to create a unified, sustainable and cohesive whole.

FINDINGS OF THE STAFF

1. A determination of the degree to which the proposed zoning is consistent with land use planning objectives, principles, and policies and with land use and zoning plans.

Finding: **Staff finds that the proposed zone is consistent with planning objectives, principles, and policies put forward in the Wedington Neighborhood Plan, which states that:**

"The utilization of the City's form based zoning districts will be essential to ensure that the development pattern prescribed here is walkable and urban. Form based zoning districts are also much more flexible in allowing for a variety of residential and commercial densities and intensities. This encourages a diverse mixture of building types, scales and uses that are not separated from each other but instead are co-mingled to create a unified, sustainable and cohesive whole."

The proposed zoning is compatible and consistent with the Wedington Corridor Plan vision for this property which calls for a variety and mix of nonresidential and residential uses.

2. A determination of whether the proposed zoning is justified and/or needed at the time the rezoning is proposed.

Finding: **Staff finds that the proposed zoning is justified and needed as the first step of implementation for the Wedington Corridor Plan, as adopted by the Fayetteville City Council, to allow for the continuance of the existing land uses, and to encourage the future redevelopment of specific properties in accordance with the City's planning policies and objectives.**

City Plan 2030 goal number three calls for *"making traditional town form the standard."* Traditional town form is identified by an urban development pattern that prioritizes an interconnected street network with buildings that are placed near the street and parking located to the side or preferably the rear of the site. Currently, the Wedington Corridor is primarily zoned utilizing suburban commercial, office and multi-family zoning districts. These zoning districts prescribe the existing suburban development pattern seen today along the corridor and it has created unintended consequences that should not be repeated going forward if the goal is to create a walkable urban core in this area.

In order to encourage the desired development patterns, it is critical to implement form-based zoning codes that are designed for this purpose. The Wedington Corridor Plan indicates that this area should be planned as part of the commercial and social 'heart' of the wider Wedington neighborhood. The property is currently zoned as C-1, C-2, and I-PZD. These zoning districts are generally incompatible the Wedington Corridor Plan.

The proposed CS, Community Services, zoning district would allow for a variety of residential types, offices, and commercial businesses that are located adjacent to the street instead of being set back in a typical automobile-oriented development pattern that discourages pedestrian traffic and re-creates sprawling thoroughfare development as seen throughout the Wedington corridor where development has taken place in recent years. Several properties have recently been rezoned, or rezoning has been requested, within the Plan boundary that do not meet current policies and

objectives. It is critical to the success of the Wedington Corridor Plan to have appropriate zoning in place before development is initiated.

3. A determination as to whether the proposed zoning would create or appreciably increase traffic danger and congestion.

Finding: **The properties primarily consist of developed land, currently in uses that would be allowed or protected under the proposed zoning district. Increased traffic volumes are unlikely given that the existing and proposed zoning permit similar uses.**

4. A determination as to whether the proposed zoning would alter the population density and thereby undesirably increase the load on public services including schools, water, and sewer facilities.

Finding: **The proposed rezoning could increase population density as CS is a mixed use zoning that permits residential use. However given the small size of the proposed rezoning and unlikely use of this busy corner for residential use it is not likely the subject property would be redeveloped for a high density project. Public service providers have reviewed the rezoning request and do not anticipate an undesirable increase on provision of public services.**

5. If there are reasons why the proposed zoning should not be approved in view of considerations under b (1) through (4) above, a determination as to whether the proposed zoning is justified and/or necessitated by peculiar circumstances such as:

   a. It would be impractical to use the land for any of the uses permitted under its existing zoning classifications;

   b. There are extenuating circumstances which justify the rezoning even though there are reasons under b (1) through (4) above why the proposed zoning is not desirable.

Finding: **N/A**

BUDGET/STAFF IMPACT:
None

ATTACHMENTS:

- Existing and proposed zoning criteria
- Fire Department comments
- Police Department comments
- Staff's request letter
- Property owner notification letters
- Rezoning exhibit/aerial photo
- Current land use map
- Close up map
- Future land use map
- One mile map
- Wedington Corridor Illustrative Master Plan

161.18 District C-1, Neighborhood Commercial

(A) *Purpose.* The Neighborhood Commercial District is designed primarily to provide convenience goods and personal services for persons living in the surrounding residential areas.

(B) *Uses.*

(1) *Permitted uses.*

Unit 1	City-wide uses by right
Unit 5	Government Facilities
Unit 13	Eating places
Unit 15	Neighborhood shopping
Unit 18	Gasoline service stations and drive-in/drive through restaurants
Unit 25	Offices, studios, and related services
Unit 44	Cottage Housing Development

(2) *Conditional uses.*

Unit 2	City-wide uses by conditional use permit
Unit 3	Public protection and utility facilities
Unit 4	Cultural and recreational facilities
Unit 16	Shopping goods
Unit 34	Liquor stores
Unit 35	Outdoor music establishments*
Unit 36	Wireless communications facilities*
Unit 40	Sidewalk Cafes
Unit 42	Clean technologies

(C) *Density.* None.

(D) *Bulk and area regulations.* None

(E) *Setback regulations.*

Front	15 ft.
Front, if parking is allowed between the right-of-way and the building	50 ft.
Side	None
Side, when contiguous to a residential district	10 ft.

Rear	20 ft.

(F) *Building height regulations.*

Building Height Maximum	56 ft.*

*Any building which exceeds the height of 20 feet shall be setback from any boundary line of any residential district a distance of one foot for each foot of height in excess of 20 feet.

(G) *Building area.* On any lot the area occupied by all buildings shall not exceed 40% of the total area of such lot.

(Code 1965, App. A., Art. 5(V); Ord. No. 2603, 2-19-80; Ord. No. 1747, 6-29-70; Code 1991, §160.035; Ord. No. 4100, §2 (Ex. A), 6-16-98; Ord. No. 4178, 8-31-99; Ord. 5028, 6-19-07; Ord. 5195, 11-6-08; Ord. 5312, 4-20-10; Ord. 5339, 8-3-10; Ord. 5462, 12-6-11; Ord. 5592, 6-18-13; Ord. 5664, 2-18-14)

161.19 Community Services

(A) *Purpose.* The *Community Services* district is designed primarily to provide convenience goods and personal services for persons living in the surrounding residential areas and is intended to provide for adaptable mixed use centers located along commercial corridors that connect denser development nodes. There is a mixture of residential and commercial uses in a traditional urban form with buildings addressing the street. For the purposes of Chapter 96: Noise Control, the Community Services district is a commercial zone. The intent of this zoning district is to provide standards that enable development to be approved administratively.

(B) *Uses.*

(1) *Permitted uses.*

Unit 1	City-wide uses by right
Unit 4	Cultural and recreational facilities
Unit 5	Government facilities
Unit 8	Single-family dwellings
Unit 9	Two-family dwellings
Unit 10	Three-family dwellings
Unit 13	Eating places
Unit 15	Neighborhood Shopping goods
Unit 18	Gasoline service stations and drive-in/drive through restaurants
Unit 24	Home occupations
Unit 25	Offices, studios and related services
Unit 26	Multi-family dwellings
Unit 44	Cottage Housing Development

Note: Any combination of above uses is permitted upon any lot within this zone. Conditional uses shall need approval when combined with pre-approved uses.

(2) *Conditional uses.*

Unit 2	City-wide uses by conditional use permit
Unit 3	Public protection and utility facilities
Unit 14	Hotel, motel and amusement services
Unit 16	Shopping goods
Unit 17	Transportation, trades and services
Unit 19	Commercial recreation, small sites

Unit 28	Center for collecting recyclable materials
Unit 34	Liquor stores
Unit 35	Outdoor music establishments
Unit 36	Wireless communication facilities*
Unit 40	Sidewalk Cafes
Unit 42	Clean technologies

(C) *Density. None*

(D) *Bulk and area regulations.*

(1) *Lot width minimum.*

Dwelling	18 ft.
All others	None

(2) *Lot area minimum.* None

(E) *Setback regulations.*

Front:	A build-to zone that is located between 10 feet and a line 25 feet from the front property line.
Side and rear:	None
Side or rear, when contiguous to a single-family residential district:	15 feet

(F) *Building Height Regulations.*

Building Height Maximum	56 ft.

(G) *Minimum buildable street frontage.* 50% of the lot width.

(Ord. 5312, 4-20-10; Ord 5339, 8-3-10; Ord 5462, 12-6-11; Ord. 5592, 6-18-13; Ord. 5664, 2-18-14)

161.20 District C-2, Thoroughfare Commercial

(A) *Purpose.* The Thoroughfare Commercial District is designed especially to encourage the functional grouping of these commercial enterprises catering primarily to highway travelers.

(B) *Uses.*

(1) *Permitted uses.*

Unit 1	City-wide uses by right
Unit 4	Cultural and recreational facilities
Unit 5	Government Facilities
Unit 13	Eating places
Unit 14	Hotel, motel, and amusement facilities
Unit 16	Shopping goods
Unit 17	Transportation trades and services
Unit 18	Gasoline service stations and drive-in/drive through restaurants
Unit 19	Commercial recreation, small sites
Unit 20	Commercial recreation, large sites
Unit 25	Offices, studios, and related services
Unit 33	Adult live entertainment club or bar
Unit 34	Liquor store
Unit 44	Cottage Housing Development

(2) *Conditional uses.*

Unit 2	City-wide uses by conditional use permit
Unit 3	Public protection and utility facilities
Unit 21	Warehousing and wholesale
Unit 28	Center for collecting recyclable materials
Unit 29	Dance Halls
Unit 32	Sexually oriented business
Unit	Outdoor music establishments

35	
Unit 36	Wireless communications facilities
Unit 38	Mini-storage units
Unit 40	Sidewalk Cafes
Unit 42	Clean technologies
Unit 43	Animal boarding and training

(C) *Density.* None.

(D) *Bulk and area regulations.* None.

(E) *Setback regulations.*

Front	15 ft.
Front, if parking is allowed between the right-of-way and the building	50 ft.
Side	None
Side, when contiguous to a residential district	15 ft.
Rear	20 ft.

(F) *Building height regulations.*

Building Height Maximum	75 ft.*

*Any building which exceeds the height of 20 feet shall be set back from a boundary line of any residential district a distance of one foot for each foot of height in excess of 20 feet.

(G) *Building area.* On any lot, the area occupied by all buildings shall not exceed 60% of the total area of such lot.

(Code 1965, App. A., Art. 5(VI); Ord No. 1833, 11-1-71; Ord. No. 2351, 6-2-77; Ord. No. 2603, 2-19-80; Ord. No. 1747, 6-29-70; Code 1991, §160.036; Ord. No. 4034, §3, 4, 4-15-97; Ord. No 4100, §2 (Ex. A), 6-16-98; Ord. No. 4178, 8-31-99; Ord. 4727, 7-19-05; Ord. 4992, 3-06-07; Ord. 5028, 6-19-07; Ord. 5195, 11-6-08; Ord 5312, 4-20-10; Ord 5339, 8-3-10; 5353, 9-7-10; Ord 5462, 12-6-11; Ord. 5592, 6-18-13; Ord. 5664, 2-18-14)

The City of Fayetteville Fire Department
303 W. Center St. Fayetteville, AR. 72701
Phone (479) 575-8365 Fax (479) 575-0471

To: **Quin Thompson**

From: **Will Beeks**

Date: **April 10, 2014**

Re: **14-4703**

This development will be protected by Engine 7 located at 835 Rupple Rd.
It is .25 miles from the station with an anticipated response time of 1 minute to the beginning of the development.
The Fayetteville Fire Department does not feel this development will affect our calls for service or our response times.

If you have any questions please feel free to contact me.

Will Beeks
Assistant Fire Marshal
Fayetteville Fire Department

Honor, Commitment, Courage;
Our people make the difference!

CITY OF
Fayetteville
ARKANSAS

MEMORANDUM

TO: Jesse Fulcher

FROM: Captain Jamie Fields
Corporal Kevin Phillips

DATE: April 15, 2014

SUBJECT: 14-4703 RZN Wedington – Rupple

In reviewing the rezoning, the Fayetteville Police Department has no issue with the request at this time. When plans are made for future development, we will review the information and provide a response.

FAYETTEVILLE POLICE DEPARTMENT
100 W. Rock Street
Fayetteville, AR 72701-6057

www.fayetteville-ar.gov

CITY OF
Fayetteville
ARKANSAS

April 1, 2014

Craig Honchell, Chair
Planning Commission
City of Fayetteville, Arkansas
113 W. Mountain St
Fayetteville, AR 72701

Re: Rezone Request-Wedington Road

Dear Planning Commission Chair,

Please accept this letter as a formal request to allow the rezoning of property located at the intersection of Wedington Road and Rupple Road from C-1, Neighborhood Commercial and C-2, Thoroughfare Commercial to CS, Community Services. The City of Fayetteville is making this request because current zoning no longer matches City of Fayetteville planning goals and principles as adopted with the Wedington Corridor Master Plan (October 25, 2012.)

In order to implement the adopted goals of the Wedington Corridor Master Plan, planning staff is working to rezone properties within the boundaries of Master Plan area. The property is currently developed, and while staff does not foresee redevelopment in the near future, it is appropriate to rezone the subject properties before redevelopment is proposed.

Existing uses will be protected and limited by ordinance (UDC 164.12) and the existing businesses will not be adversely impacted by the rezone.

The City Plan 2030 Future Land Use Map designates this property and surrounding properties as City Neighborhood Area.

Should any additional information be required to process this request, please do not hesitate to contact me.

Sincerely,

Quin Thompson
Current Planner
City of Fayetteville Development Services
qthompson@ci.fayetteville.ar.us
479-575-8327

CITY OF
Fayetteville
ARKANSAS

May 21, 2014

Dennis Caudle
c/o West Side Storage, Inc.
1192 N Rupple Road,
Fayetteville, AR 72704

RE: Wedington Plan Rezoning (Revised Hearing Date)

Dear Mr. Caudle,

This letter is in reference to your property, parcel #765-16231-000, located northeast of the intersection of Wedington and Rupple Roads, and within the Wedington Corridor Neighborhood Master Plan area. On Thursday, October 25, 2012, the City of Fayetteville began the planning process for the Wedington Corridor Neighborhood Master Plan, a complete neighborhood plan that incorporates the key principles, goals, and objects of City Plan 2030. During the week of October 25 through November 1, 2012, more than 100 citizens offered input on the vision for the Wedington Corridor Neighborhood Master Plan area during a charrette process that included a hands-on design session, an open design studio, and a work-in-progress session.

As an initial step in the process of building this vision, planning staff will bring forward a rezoning proposal to the Planning Commission on **June 09, 2014** and propose to rezone your property (the parcel referenced above) from C-2, Thoroughfare Commercial and I-PZD (expired) to CS, Community Services. Included in this letter are the uses and criteria for the current zoning districts (C-2, Thoroughfare Commercial.) and the proposed zoning district (CS, Community Services.) Should you have any questions or concerns about this information, please contact me.

Project Description:

The City of Fayetteville proposes to rezone select properties, being within the Wedington Corridor Neighborhood Master Plan area, from C-2, Thoroughfare Commercial and I-PZD (expired) to CS, Community Services.

Public Hearings:

At the request of the applicant (City of Fayetteville,) this request was tabled at the Planning Commission meeting of May 12, 2014.

The next scheduled public hearing on the rezoning proposal is the Planning Commission meeting at **5:30 PM on June 09, 2014**; 113 West Mountain Street (City Administration Building, Rm 219) Fayetteville, AR 72701.

Review Location:
Additional project information is available for public review at the City of Fayetteville Planning Division, 125 West Mountain Street, Fayetteville, AR 72701, Monday - Friday between 8:00 AM and 5:00 PM.

Regards,

Quin Thompson
Current Planner
City of Fayetteville
Ph 479-575-8327
qthompson@fayetteville-ar.gov

att: C-2 Zoning District
CS Zoning District

CITY OF
Fayetteville
ARKANSAS

May 21, 2014

Patrick J & Darlene Tobin
2901 N Tobin Ln
Fayetteville, AR 72703-6409

RE: Wedington Plan Rezoning (revised hearing date)

Dear Mr. & Mrs. Tobin,

This letter is in reference to your properties, parcels #765-16232-000 and #765-16233-000, located northeast of the intersection of Wedington and Rupple Roads, and within the Wedington Corridor Neighborhood Master Plan area. On Thursday, October 25, 2012, the City of Fayetteville began the planning process for the Wedington Corridor Neighborhood Master Plan, a complete neighborhood plan that incorporates the key principles, goals, and objects of City Plan 2030. During the week of October 25 through November 1, 2012, more than 100 citizens offered input on the vision for the Wedington Corridor Neighborhood Master Plan area during a charrette process that included a hands-on design session, an open design studio, and a work-in-progress session.

As an initial step in the process of building this vision, planning staff will bring forward a rezoning proposal to the Planning Commission on **June 09, 2014**, and propose to rezone your property (the parcel referenced above) from C-1, Neighborhood Commercial to CS, Community Services. Included in this letter are the uses and criteria for the current zoning districts (C-1, Neighborhood Commercial) and the proposed zoning district (CS, Community Services.) Should you have any questions or concerns about this information, please contact me.

Project Description:
The City of Fayetteville proposes to rezone select properties, being within the Wedington Corridor Neighborhood Master Plan area, from C-1, Neighborhood Commercial to CS, Community Services.

Public Hearings:

At the request of the applicant (City of Fayetteville,) this request was tabled at the Planning Commission meeting of May 12, 2014.

The next scheduled public hearing on the rezoning proposal is the Planning Commission meeting at 5:30 PM on June 09, 2014; 113 West Mountain Street (City Administration Building, Rm 219) Fayetteville, AR 72701.

Review Location:
Additional project information is available for public review at the City of Fayetteville Planning Division, 125 West Mountain Street, Fayetteville, AR 72701, Monday - Friday between 8:00 AM and 5:00 PM.

Respectfully,

Quin Thompson
Current Planner
City of Fayetteville
Ph: 479-575-8327
qthompson@fayetteville-ar.gov

att: C-1 Zoning District
CS Zoning District

west side storage, inc
zone 2
tobin, patrick
& darlene
100 50 0 100 Feet

RZN14-4703

Current Land Use

WEDINGTON ZONE 2

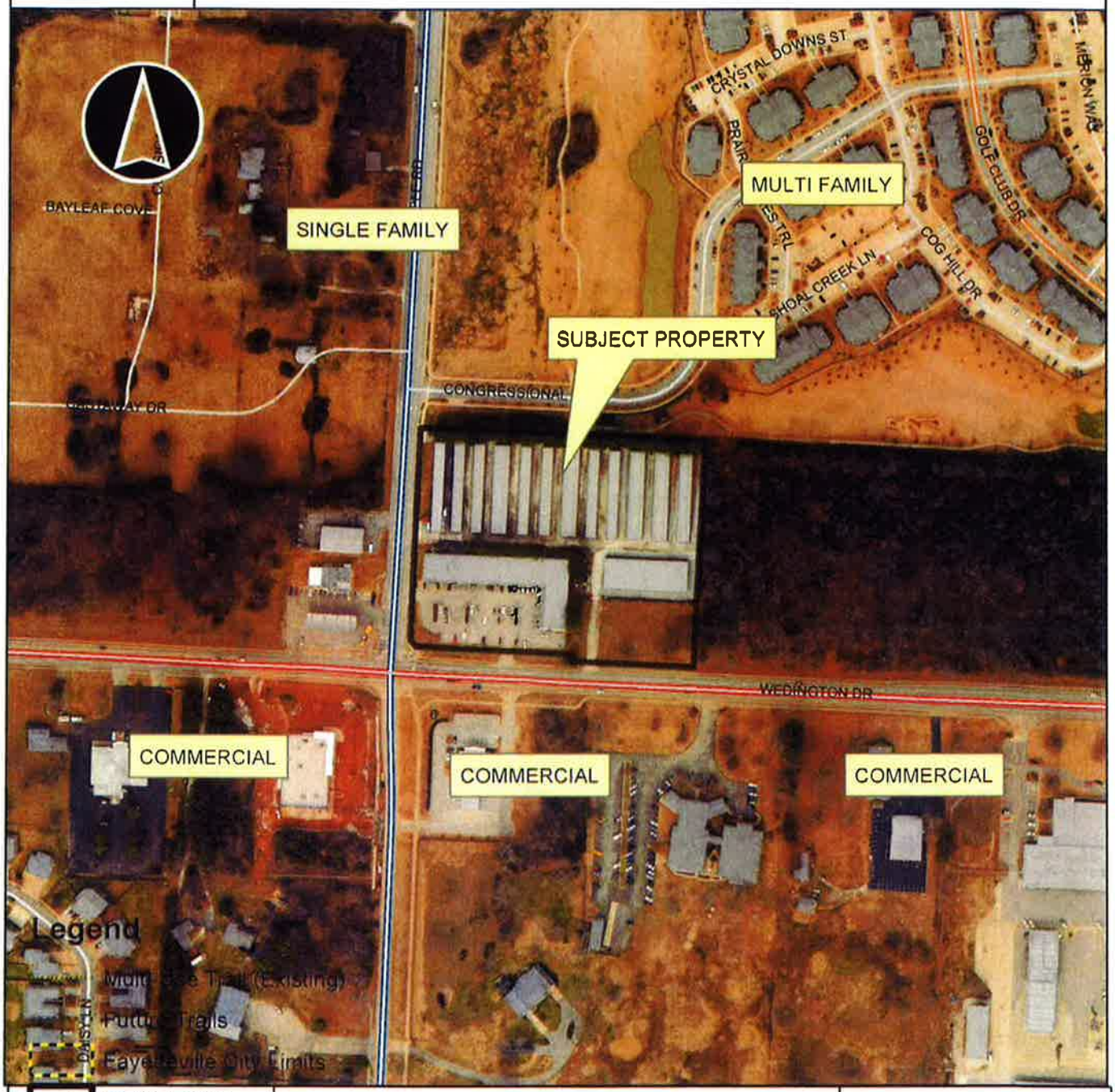

Overview RZN14-4703

Footprints 2010

Hillside-Hilltop Overlay District

Design Overlay District

Design Overlay District

Planning Area

0 125 250 500 750 1,000 Feet

RZN14-4703

Close Up View

WEDINGTON ZONE 2

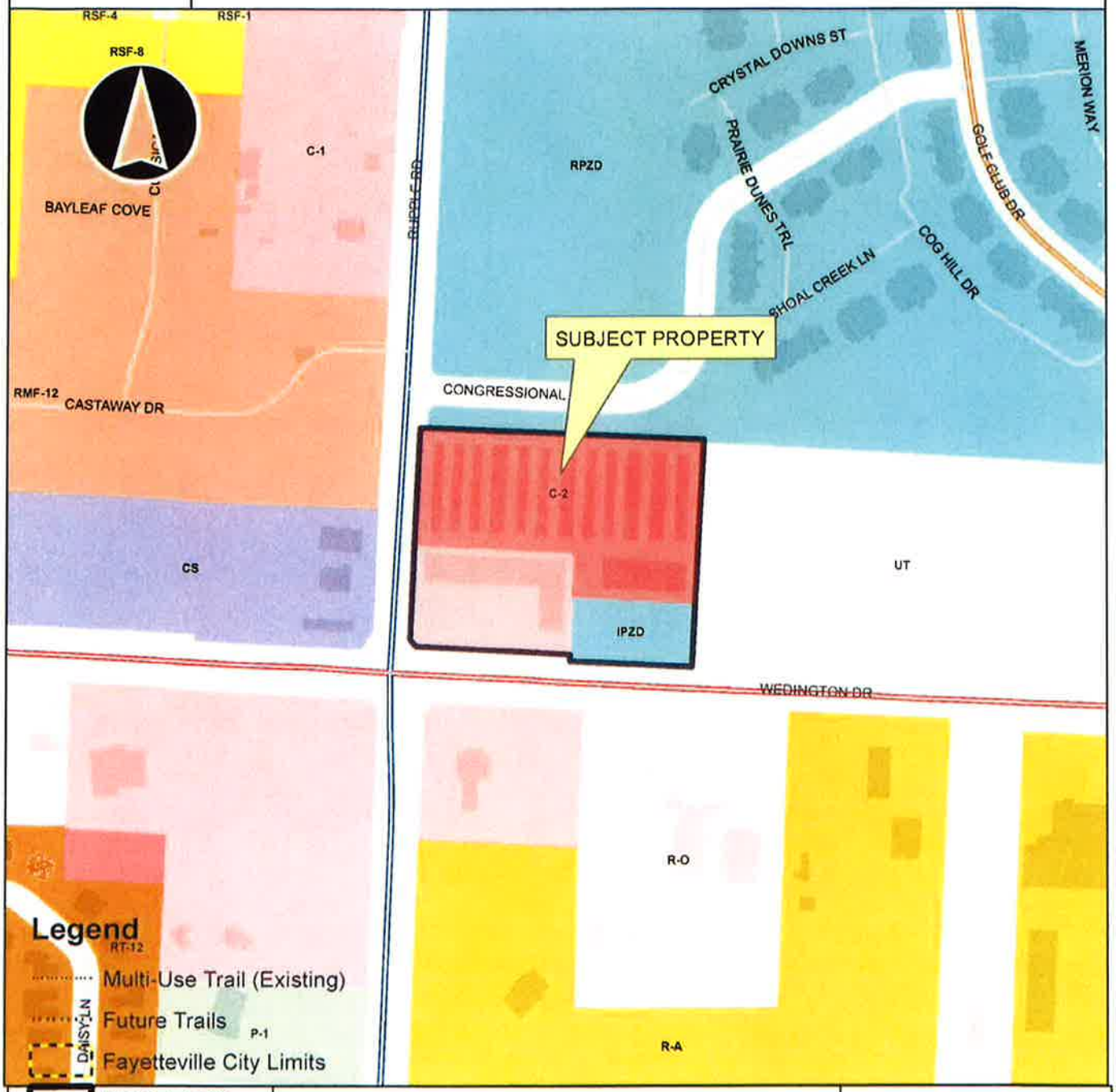

Overview RZN14-4703

Footprints 2010

Hillside-Hilltop Overlay District

Design Overlay District

Design Overlay District

Planning Area

0 125 250 500 750 1,000 Feet

Planning Commission
June 9, 2014
Agenda Item 4
14-4703 RZN (Wedington Zone 2)
Page 23 of 26

RZN14-4703

Future Land Use

WEDINGTON ZONE 2

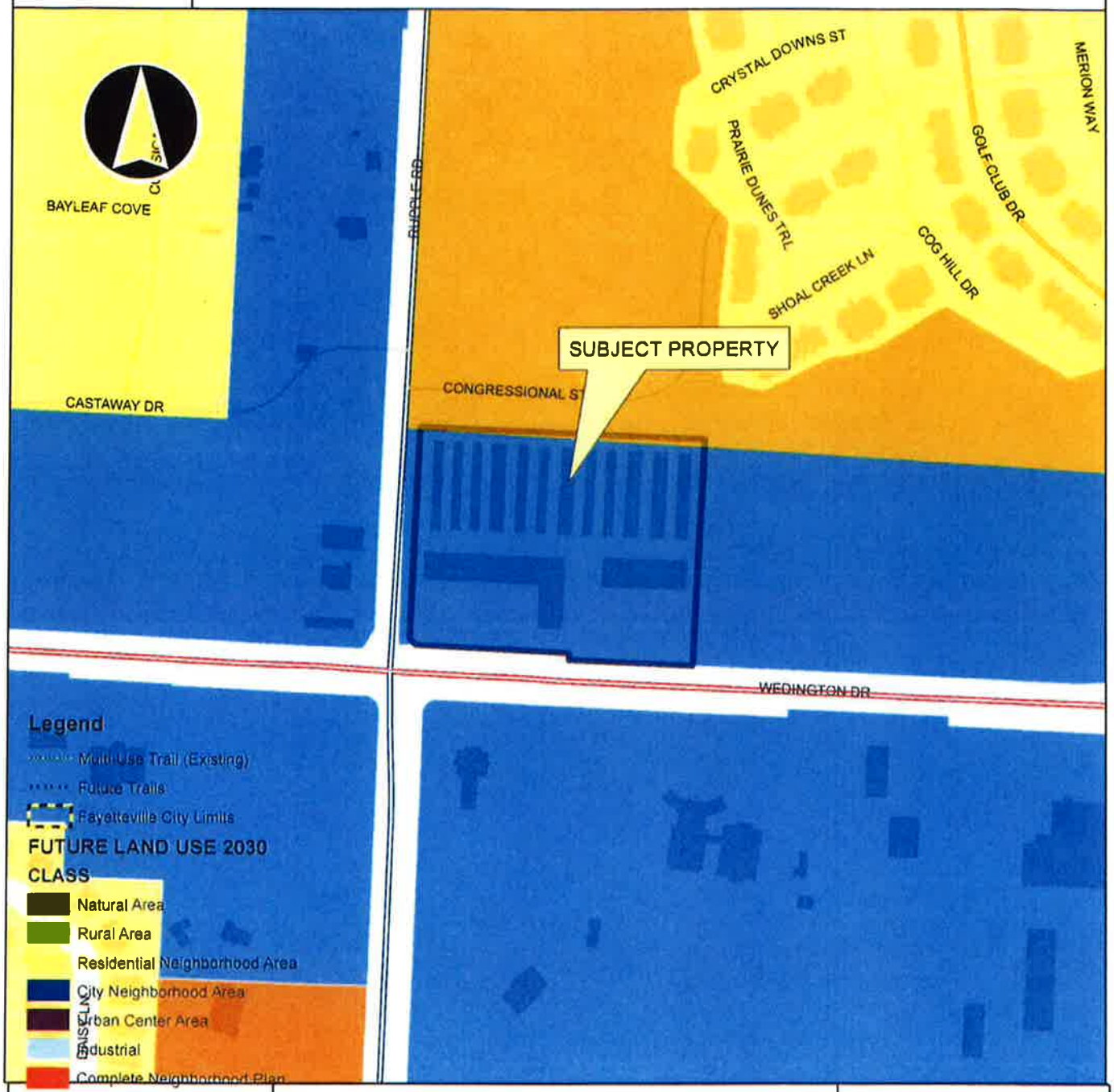

RZN14-4703

One Mile View

WEDINGTON ZONE 2

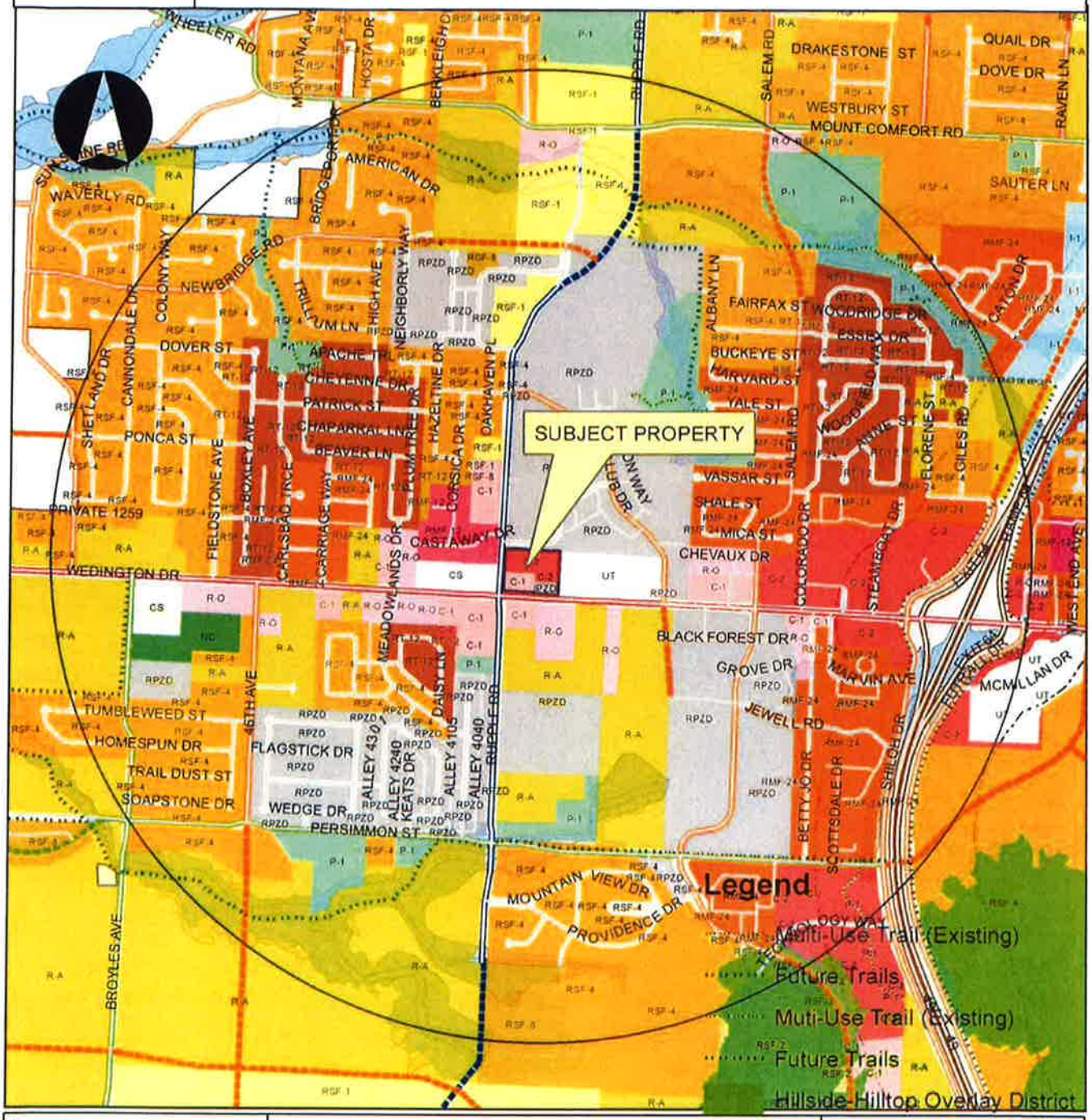

Overview

Legend

Subject Property

RZN14-4703

Boundary

RZN14-4703

Design Overlay District

Planning Area

Fayetteville

0 0.25 0.5 1 Miles

Planning Commission
June 9, 2014
Agenda Item 4
14-4703 RZN (Wedington Zone 2)
Page 25 of 26

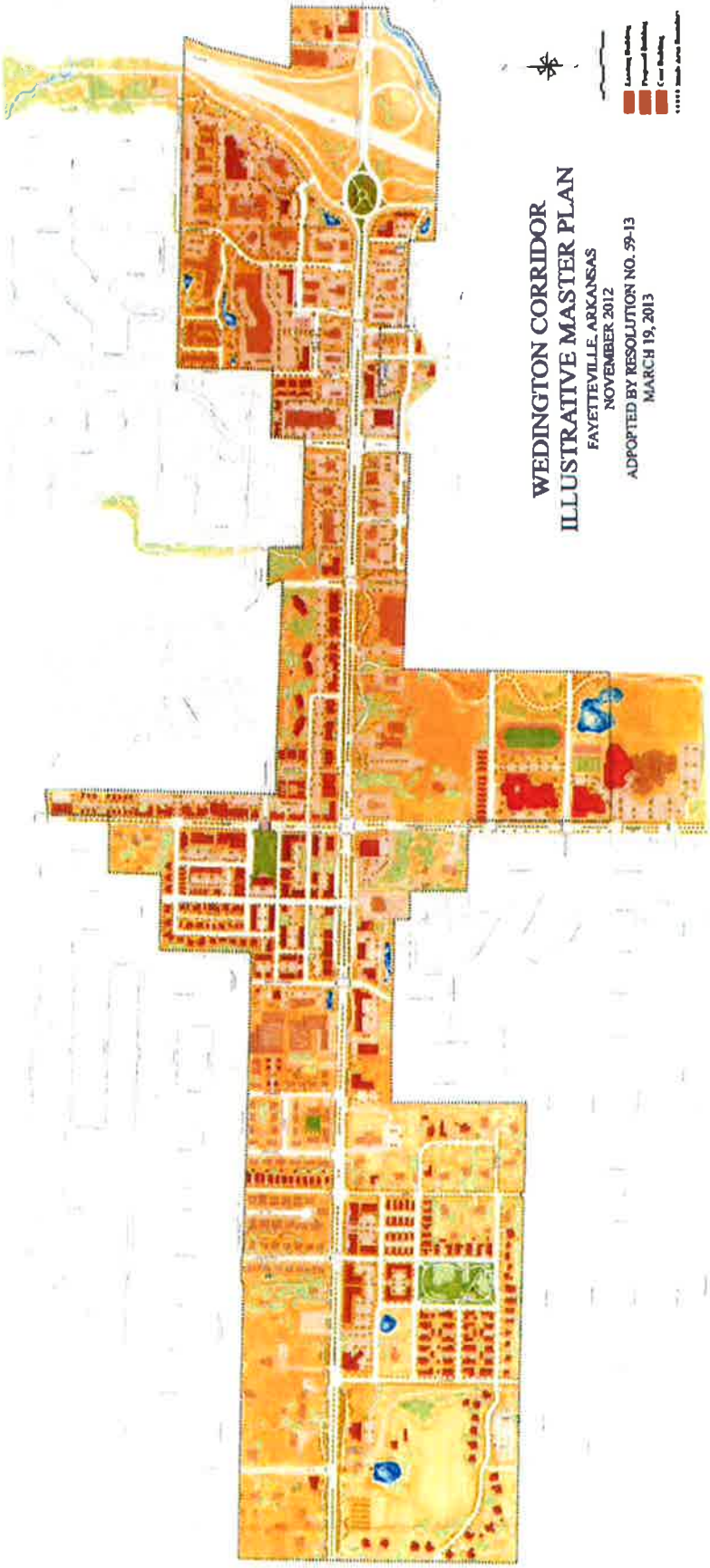
WEDINGTON CORRIDOR
ILLUSTRATIVE MASTER PLAN
FAYETTEVILLE, ARKANSAS
NOVEMBER 2012
ADOPTED BY RESOLUTION NO. 59-13
MARCH 19, 2013

City of Fayetteville Item Review Form

2014-0267

Legistar File Number

07/15/2014

City Council Meeting Date - Agenda Item Only

N/A for Non-Agenda Item

Jesse Fulcher

Submitted By

Development Services

Department

Action Required:

RZN 14-4729: Rezone (CATO SPRINGS RD./CHAMBERS BANK, 673): Submitted by HUNTER HAYNES for property located at CATO SPRINGS ROAD. The property is zoned R-PZD, RESIDENTIAL PLANNED ZONING DISTRICT SOUTHPASS and contains approximately 253.23 acres. The request is to rezone the property to UT, URBAN THOROUGHFARE, CS, COMMUNITY SERVICES, AND NC, NEIGHBORHOOD CONSERVATION.

Does this item have a cost?

Cost of this request	Category or Project Budget	Program or Project Name
Account Number	Funds Used to Date	Program or Project Category
Project Number	$0.00 Remaining Balance	Fund Name

Budgeted Item? **Budget Adjustment Attached?**

V20130812

ENTERED 10-19-14 DM

Previous Ordinance or Resolution #

Original Contract Number:

Comments:

ENTERED 6/23/14 BRP

06.18.2014

6-23-14

6/23/14

6/23/14

CITY OF Fayetteville ARKANSAS

CITY COUNCIL AGENDA MEMO

MEETING OF JULY 15, 2014

TO: Fayetteville City Council

THRU: Andrew Garner, Planning Director amg

FROM: Jesse Fulcher, Senior Planner

DATE: June 9, 2014

SUBJECT: **RZN 14-4729: Rezone (CATO SPRINGS RD./CHAMBERS BANK, 673):** Submitted by HUNTER HAYNES for property located at CATO SPRINGS ROAD. The property is zoned R-PZD, RESIDENTIAL PLANNED ZONING DISTRICT SOUTHPASS and contains approximately 253.23 acres. The request is to rezone the property to UT, URBAN THOROUGHFARE, CS, COMMUNITY SERVICES, AND NC, NEIGHBORHOOD CONSERVATION.

RECOMMENDATION:
The Planning Commission and City Planning Staff recommend approval of an ordinance to rezone the property to UT, Urban Thoroughfare, CS, Community Services, and NC, Neighborhood Conservation.

BACKGROUND:
The subject property is located along Cato Springs Road (south Razorback Road) just west of I-49/540 and the Fulbright Expressway. The property is a part of the SouthPass Planned Zoning District that was approved in 2008 on approximately 900 acres. The SouthPass development is still an approved project, but the property is now owned by Chambers Bank.

The 253 acres owned by Chambers Bank includes all of the property along Cato Springs Road (a principal arterial). The approved development plan for this area includes several planning areas that permit a mixture of commercial, residential and civic land uses in a traditional town form.

CITY PLAN 2030 FUTURE LAND USE PLAN: City Plan 2030 Future Land Use Map designates this property as a Natural Area, Residential Neighborhood Area, Civic and Private Open Space Parks, and Urban Center Area.

COMPATIBILITY: The requested zoning designations will allow a development pattern that is consistent with the existing SouthPass development plan, the future land use map and City Plan 2030 goals. This includes a walkable, mixed-use environment and a variety of housing types, sizes and densities.

These characteristics are essential for reducing the dependency on the automobile, which is typically the second largest expense behind housing. It also provides the ability for an aging population to reduce their dependency on driving and to age in place.

Finally, the development pattern and potential densities allowed by these zoning designations allow efficient use of land and public infrastructure. The SouthPass development plan contained dense areas of development, but at the same time it was also spread out across 400 acres. With the purchase of Mount Kessler Preserve, the overall development area has been reduced to approximately 250 acres and all of this land is concentrated along the east portion of the property with frontage on a state highway (Cato Springs Road).

DISCUSSION:
On June 9, 2014 the Planning Commission forwarded this item to the City Council with a recommendation for approval with a vote of 6-0-0.

BUDGET/STAFF IMPACT:
N/A

Attachments:
CC Ordinance
Exhibit A
Exhibit B
Planning Commission Staff Report

ORDINANCE NO.

AN ORDINANCE REZONING THAT PROPERTY DESCRIBED IN REZONING PETITION RZN 14-4729, FOR APPROXIMATELY 253.23 ACRES, LOCATED ALONG CATO SPRINGS ROAD ADJACENT TO THE CITY'S REGIONAL PARK PROPERTY FROM R-PZD, RESIDENTIAL PLANNED ZONING DISTRICT SOUTHPASS 08-2898, TO UT, URBAN THOROUGHFARE, CS, COMMUNITY SERVICES, AND NC, NEIGHBORHOOD CONSERVATION.

BE IT ORDAINED BY THE CITY COUNCIL OF THE CITY OF FAYETTEVILLE, ARKANSAS:

Section 1: That the City Council of the City of Fayetteville, Arkansas hereby changes the zone classification of the following described property from R-PZD, Residential Planned Zoning District Southpass 08-2898 to UT, Urban Thoroughfare, CS, Community Services, and NC, Neighborhood Conservation as shown on Exhibits "A" and "B" attached hereto and made a part hereof.

Section 2: That the City Council of the City of Fayetteville, Arkansas hereby amends the official zoning map of the City of Fayetteville to reflect the zoning change provided in Section 1.

PASSED and **APPROVED** this day of , 2014.

APPROVED: ATTEST:

By: _____ By: _____

LIONELD JORDAN, Mayor **SONDRA E. SMITH**, City Clerk/Treasurer

EXHIBIT 'A'
14-4729

RZN14-4729

Close Up View

CHAMBERS BANK

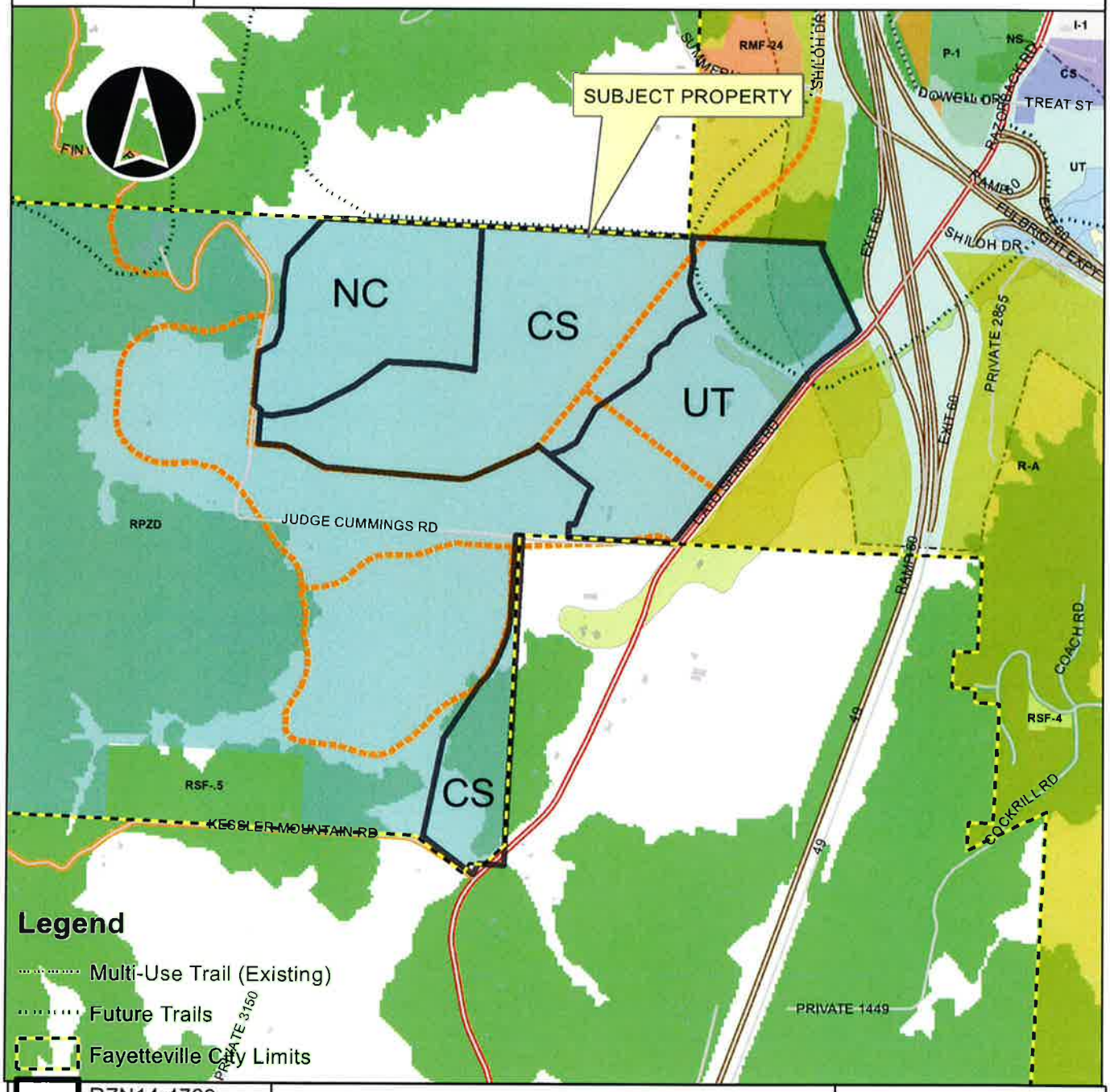

EXHIBIT 'B'
14-4729

Description of Rezone Tract #1 (UT, Urban Thoroughfare)

Located in a part of the SE ¼ of Section 30 and in a part of the NW ¼ of Section 29, Township 16 North, Range 30 West in Washington County, Arkansas, more precisely described as follows: Starting at the Northwest Corner of the NW ¼ of the SW ¼ of Section 29;
thence along the North line of the NW ¼ of the SW ¼,
South 87 degrees 02 minutes 54 seconds East, 38.84 feet to the true POINT OF BEGINNING;
thence continue along said North line,
South 87 degrees 02 minutes 54 seconds East, 1109.31 feet;
thence South 09 degrees 21 minutes 27 seconds West, 48.62 feet;
thence South 24 degrees 41 minutes 28 seconds East, 767.50 feet;
thence along the Westerly right-of-way of Cato Springs Road and a non tangent curve to the right, with a radius of 1105.92 feet, an arc length of 168.32 feet, and a chord of South 48 degrees 21 minutes 49 seconds West, 168.16 feet;
thence continue along said right-of-way the following courses:
South 52 degrees 43 minutes 25 seconds West, 205.00 feet;
thence along a non tangent curve to the left, with a radius of 1185.92 feet, an arc length of 304.99 feet, and a chord of South 45 degrees 21 minutes 28 seconds West, 304.15 feet;
thence South 37 degrees 59 minutes 25 seconds West, 136.98 feet;
thence South 37 degrees 59 minutes 25 seconds West 1618.91 feet;
thence leaving said right-of-way and along the South line of the SE ¼ of the SE ¼,
North 87 degrees 14 minutes 10 seconds West, 901.69 feet;
thence North 02 degrees 57 minutes 59 seconds East, 115.76 feet;
thence South 87 degrees 00 minutes 05 seconds East, 55.82 feet;
thence North 21 degrees 06 minutes 01 seconds East, 293.94 feet;
thence North 38 degrees 01 minutes 43 seconds East, 50.50 feet;
thence North 51 degrees 58 minutes 17 seconds West, 462.85 feet;
thence along the Easterly side of a multi use trail easement the following courses:
North 71 degrees 06 minutes 52 seconds East, 128.87 feet;
thence North 60 degrees 30 minutes 43 seconds East, 131.59 feet;
thence North 28 degrees 31 minutes 13 seconds East, 332.63 feet;
thence North 55 degrees 42 minutes 46 seconds East, 451.12 feet;
thence North 42 degrees 18 minutes 39 seconds East, 121.17 feet;
thence North 08 degrees 58 minutes 10 seconds East, 110.61 feet;
thence North 43 degrees 18 minutes 48 seconds East, 121.12 feet;
thence North 65 degrees 25 minutes 27 seconds East, 75.47 feet;
thence North 28 degrees 10 minutes 09 seconds East, 69.29 feet;
thence North 42 degrees 01 minutes 28 seconds East, 110.35 feet;
thence North 56 degrees 23 minutes 14 seconds East, 36.65 feet;
thence North 63 degrees 57 minutes 50 seconds East, 189.20 feet;
thence North 41 degrees 20 minutes 40 seconds West, 15.34 feet;
thence North 31 degrees 47 minutes 17 seconds West, 144.18 feet;

thence North 14 degrees 29 minutes 06 seconds West, 135.62 feet;
thence North 03 degrees 25 minutes 49 seconds East, 57.68 feet;
thence North 11 degrees 10 minutes 56 seconds East, 62.53 feet;
thence North 08 degrees 30 minutes 38 seconds East, 51.94 feet;
thence North 06 degrees 07 minutes 40 seconds East, 47.88 feet;
thence North 07 degrees 18 minutes 24 seconds West, 56.57 feet;
thence North 02 degrees 24 minutes 28 seconds East, 123.61 feet to the true POINT OF BEGINNING containing 78.782 acres more or less and being subject to the right-of-way of Cato

EXHIBIT 'B'
14-4729

Springs Road.

Description of Tract #2 (CS, Community Services)

Located in a part of the SE ¼ and in a part of the SW ¼ of Section 30 and in a part of the NW ¼ of the SW ¼ of Section 29, Township 16 North, Range 30 West in Washington County, Arkansas, more precisely described as follows: Starting at the Northeast Corner of the NE ¼ of the SE ¼ of Section 30 for the true POINT OF BEGINNING;
thence along the North line of the NW ¼ of the SW ¼,
South 87 degrees 02 minutes 54 seconds East, 38.84 feet;
thence along the Easterly side of a multi use trail easement the following courses:
South 02 degrees 24 minutes 28 seconds West, 123.61 feet;
thence South 07 degrees 18 minutes 24 seconds East, 56.57 feet;
thence South 06 degrees 07 minutes 40 seconds West, 47.88 feet;
thence South 08 degrees 30 minutes 38 seconds West, 51.94 feet;
thence South 11 degrees 10 minutes 56 seconds West, 62.53 feet;
thence South 03 degrees 25 minutes 49 seconds West, 57.68 feet;
thence South 14 degrees 29 minutes 06 seconds East, 135.62 feet;
thence South 31 degrees 47 minutes 17 seconds East, 144.18 feet;
thence South 41 degrees 20 minutes 40 seconds East, 15.34 feet;
thence South 63 degrees 57 minutes 50 seconds West, 189.20 feet;
thence South 56 degrees 23 minutes 14 seconds West, 36.65 feet;
thence South 42 degrees 01 minutes 28 seconds West, 110.35 feet;
thence South 28 degrees 10 minutes 09 seconds West, 69.29 feet;
thence South 65 degrees 25 minutes 27 seconds West, 75.47 feet;
thence South 43 degrees 18 minutes 48 seconds West, 121.12 feet;
thence South 08 degrees 58 minutes 10 seconds West, 110.61 feet;
thence South 42 degrees 18 minutes 39 seconds West, 121.17 feet;
thence South 55 degrees 42 minutes 46 seconds West, 451.12 feet;
thence South 28 degrees 31 minutes 13 seconds West, 332.63 feet;
thence South 60 degrees 30 minutes 43 seconds West, 131.59 feet;
thence South 71 degrees 06 minutes 52 seconds West, 128.87 feet;
thence leaving said multi use trail easement,
North 51 degrees 58 minutes 17 seconds West, 125.11 feet;
thence along a non tangent curve to the right, with a radius of 301.46 feet, an arc length of 63.15 feet, and a chord of South 52 degrees 42 minutes 27 seconds West, 63.03 feet;
thence along a non tangent curve to the right, with a radius of 923.88 feet, an arc length of 93.05 feet, and a chord of South 64 degrees 35 minutes 06 seconds West, 93.01 feet;
thence South 66 degrees 01 minutes 06 seconds West, 470.23 feet;
thence along a non tangent curve to the right, with a radius of 250.14 feet, an arc length of 128.71 feet, and a chord of South 80 degrees 45 minutes 50 seconds West, 127.30 feet;
thence North 84 degrees 59 minutes 04 seconds West, 1095.13 feet;
thence along a non tangent curve to the right, with a radius of 195.85 feet, an arc length of 91.34 feet, and a chord of North 74 degrees 33 minutes 17 seconds West, 90.52 feet;
thence North 60 degrees 22 minutes 54 seconds West, 265.82 feet;
thence along a non tangent curve to the left, with a radius of 250.00 feet, an arc length of 97.46 feet, and a chord of North 71 degrees 25 minutes 38 seconds West, 96.85 feet;
thence North 84 degrees 56 minutes 16 seconds West, 197.11 feet;
thence North 03 degrees 35 minutes 47 seconds East, 252.99 feet;
thence South 83 degrees 34 minutes 51 seconds East, 103.42 feet;

EXHIBIT 'B'
14-4729

thence North 79 degrees 43 minutes 51 seconds East, 304.83 feet;
thence North 62 degrees 33 minutes 24 seconds East, 441.82 feet;
thence North 53 degrees 13 minutes 50 seconds East, 346.93 feet;
thence South 87 degrees 27 minutes 30 seconds East, 438.57 feet;
thence South 81 degrees 26 minutes 29 seconds East, 315.93 feet;
thence North 02 degrees 43 minutes 07 seconds East, 1242.60 feet;
thence along the North line of the NW ¼ of the SE ¼,
South 87 degrees 14 minutes 48 seconds East, 467.09 feet;
thence along the North line of the NE ¼ of the SE ¼,
South 87 degrees 14 minutes 48 seconds East 1315.53 feet to the true POINT OF BEGINNING containing 97.114 acres more or less.

Description of Tract #3 (NC, Neighborhood Conservation)

Located in a part of the SW ¼ and in a part of the NW ¼ of the SE ¼ of Section 30, Township 16 North, Range 30 West in Washington County, Arkansas, more precisely described as follows: Starting at the Northeast Corner of the NW ¼ of the SE ¼ of Section 30;
thence along the North line of the NW ¼ of the SE ¼,
North 87 degrees 14 minutes 48 seconds West, 467.09 feet to the true POINT OF BEGINNING;
thence South 02 degrees 43 minutes 07 seconds West, 1242.60 feet;
thence North 81 degrees 26 minutes 29 seconds West, 315.93 feet;
thence North 87 degrees 27 minutes 30 seconds West, 438.57 feet;
thence South 53 degrees 13 minutes 50 seconds West, 346.93 feet;
thence South 62 degrees 33 minutes 24 seconds West, 441.82 feet;
thence South 79 degrees 43 minutes 51 seconds West, 304.83 feet;
thence North 83 degrees 34 minutes 51 seconds West, 103.42 feet;
thence North 03 degrees 35 minutes 47 seconds East, 37.86 feet;
thence North 52 degrees 53 minutes 46 seconds West 74.06 feet;
thence North 05 degrees 00 minutes 56 seconds East, 407.82 feet;
thence along a curve to the right having a radius of 500.00 feet, an arc length of 50.72 feet, and a chord of North 07 degrees 55 minutes 18 seconds East, 50.70 feet;
thence North 62 degrees 14 minutes 34 seconds East, 144.11 feet;
thence North 21 degrees 49 minutes 09 seconds East, 147.86 feet;
thence North 03 degrees 48 minutes 55 seconds East, 256.86 feet;
thence North 02 degrees 29 minutes 50 seconds East, 150.44 feet;
thence North 09 degrees 10 minutes 25 seconds East, 205.19 feet;
thence North 42 degrees 00 minutes 27 seconds East, 459.26 feet;
thence along the North line of the SW ¼ and the SE ¼,
South 87 degrees 14 minutes 48 seconds East, 1351.64 feet to the true POINT OF BEGINNING containing 54.030 acres more or less.

Description of Tract #7 (CS, Community Services)

Located in a part of the NE ¼ and in a part of the NW ¼ of the SE ¼ of Section 31, Township 16 North, Range 30 West in Washington County, Arkansas, more precisely described as follows: Starting at the Southwest Corner of the SW ¼ of the NE ¼ of Section 31;

EXHIBIT 'B'
14-4729

thence South 87 degrees 21 minutes 02 seconds East, 611.31 feet to the true POINT OF BEGINNING;
thence North 11 degrees 38 minutes 17 seconds East, 854.64 feet;
thence North 33 degrees 27 minutes 57 seconds East, 568.10 feet;
thence along a non tangent curve to the left, with a radius of 800.00 feet, an arc length of 309.60 feet, and a chord of North 33 degrees 25 minutes 46 seconds East, 307.67 feet;
thence North 22 degrees 20 minutes 34 seconds East, 97.52 feet;
thence along a curve to the left having a radius of 800.00 feet, an arc length of 264.94 feet, and a chord of North 12 degrees 51 minutes 19 seconds East, 263.73 feet; thence North 03 degrees 22 minutes 05 seconds East, 676.13 feet;
thence South 87 degrees 14 minutes 10 seconds East, 61.42 feet;
thence South 03 degrees 10 minutes 53 seconds West, 2628.17 feet;
thence South 02 degrees 57 minutes 17 seconds West, 214.50 feet;
thence North 87 degrees 02 minutes 43 seconds West, 214.50 feet;
thence South 28 degrees 45 minutes 47 seconds West, 105.32 feet;
thence North 52 degrees 17 minutes 51 seconds West, 543.73 feet to the true POINT OF BEGINNING containing 23.297 acres more or less.

CITY OF Fayetteville ARKANSAS

PLANNING COMMISSION MEMO

TO: Fayetteville Planning Commission

THRU: Andrew Garner, City Planning Director

FROM: Jesse Fulcher, Senior Planner

MEETING DATE: ~~June 9, 2014~~ *Updated June 11, 2014*

SUBJECT: **RZN 14-4729: Rezone (CATO SPRINGS RD./CHAMBERS BANK, 673):** Submitted by HUNTER HAYNES for property located at MT. KESSLER PARK. The property is zoned R-PZD, RESIDENTIAL PLANNED ZONING DISTRICT and contains approximately 253.23 acres. The request is to rezone the property to UT, URBAN THOROUGHFARE, CS, COMMUNITY SERVICES, AND NC, NEIGHBORHOOD CONSERVATION.

RECOMMENDATION:
Staff recommends forwarding **RZN 14-4729** to the City Council with a recommendation for approval.

BACKGROUND:

The subject property is located along Cato Springs Road (south Razorback Road) just west of I-49/540 and the Fulbright Expressway. The property is a part of the SouthPass Planned Zoning District that was approved in 2008 on approximately 900 acres. The SouthPass development is still an approved project, but the property is now owned by Chambers Bank.

The 253 acres owned by Chambers Bank includes all of the property along Cato Springs Road (a principal arterial). The approved development plan for this area includes several planning areas that permit a mixture of commercial, residential and civic land uses in a traditional town form. Surrounding land use and zoning is depicted on Table 1.

Table 1
Surrounding Land Use and Zoning

Direction from Site	Land Use	Zoning
North	Single-family residential	Washington County
South	Single-family residential	Washington County
East	Single-family residential	Washington County, R-A Residential Agricultural
West	Single-family residential	Washington County

DISCUSSION:

Request: The request is to rezone 253.23 acres of R-PZD 08-2898 SouthPass Development as follows:

- 78.78 acres to UT, Urban Thoroughfare
- 120.41 acres to CS, Community Services
- 54.03 acres to Neighborhood Conservation

Public Comment: Staff has not received public comment.

PLANNING COMMISSION ACTION: Required

Date: June 9, 2014 ❒ **Tabled** √ **Forwarded** ❒ **Denied**

Motion: Winston **Second: Chesser** **Vote: 6-0-0**

CITY COUNCIL ACTION: Required

Date: July 1, 2014 ❒ **Approved** ❒ **Denied**

INFRASTRUCTURE:

Streets: The site has access to Cato Springs Road, a two-lane state highway, Judge Cummings Road, an unimproved gravel road and Archie Watkins Road, an unimproved dirt road. Roadway improvements will be determined at the time of development.

Water: Public water is accessible to the site. A 2" water main exists on Archie Watkins Road. The property encompasses two city water storage tanks with a 30" outlet line. The feasibility to connect to this line will be determined by the Water Department.

Sewer: No public sanitary sewer is available to the site.

Drainage: Any additional improvements or requirements for drainage will be determined at time of development. This property is affected by the 100-year floodplain and the Streamside Protection Ordinance.

Fire: This development will be protected by Engine 6 located at 900 S. Hollywood. It is 3.1 miles from the station with an anticipated response time of 7 minutes to the beginning of the development. The Fayetteville Fire Department feels this development will have a moderate effect on calls for service and response times.

Police: The Police Department did not express any concerns with this request.

CITY PLAN 2030 FUTURE LAND USE PLAN: ***City Plan 2030 Future Land Use Map designates this property as a Natural Area, Residential Neighborhood Area, Civic and Private Open Space Parks, and Urban Center Area.***

FINDINGS OF THE STAFF

1. A determination of the degree to which the proposed zoning is consistent with land use planning objectives, principles, and policies and with land use and zoning plans.

Finding: **The requested zoning designations will allow a development pattern that is consistent with the existing SouthPass development plan, the future land use map and City Plan 2030 goals. This includes a walkable, mixed-use environment and a variety of housing types, sizes and densities.**

These characteristics are essential for reducing the dependency on the automobile, which is typically the second largest expense behind housing. It also provides the ability for an aging population to reduce their dependency on driving and to age in place.

Finally, the development pattern and potential densities allowed by these zoning designations allow efficient use of land and public infrastructure. The SouthPass development plan contained dense areas of development, but at the same time it was also spread out across 400 acres. With the purchase of Mount Kessler Preserve, the overall development area has been reduced to approximately 250 acres and all of this land is concentrated along the east portion of the property with frontage on two existing roadways.

2. A determination of whether the proposed zoning is justified and/or needed at the time the rezoning is proposed.

Finding: **The rezoning is justified at this time, because there have been a number of changes in land ownership, since the project was approved in 2008. As noted above, the amount of land area to be privately developed has been reduced from 400 acres to 250 acres. The amount of publicly owned property has increased from approximately 200 acres to over 600 acres.**

Another reason to rezone the property is to replace very complicated and site specific zoning regulations associated with the Planned Zoning District. The PZD booklet, which describes the project and includes the zoning criteria and architectural standards is 69 pages long. Rezoning the property to standard form based zoning districts will be much simpler for staff to administer and for the owner to market for development.

3. A determination as to whether the proposed zoning would create or appreciably increase traffic danger and congestion.

Finding: **Rezoning the property as described should not appreciably increase traffic danger or congestion. The property is already approved for the development of 4,200 residential units and 359,000 square feet of nonresidential space. The new zoning designations will permit a similar development pattern, however, the amount of land to be developed has been reduced almost in**

half from the original PZD approval and therefore the impact of future development on traffic congestion should be much less.

4. A determination as to whether the proposed zoning would alter the population density and thereby undesirably increase the load on public services including schools, water, and sewer facilities.

Finding: **The proposed zoning request will not alter population density or increase the load on public services. As noted already, this property is approved for a large number of residential units and nonresidential square footage. The development of this property, likely over several decades, will substantially change the population density of the area and require substantial investment in public infrastructure that will be borne by the developer. In 2008, the Fire Department noted in their comments that the number of residential units in the SouthPass Development would hit one of the trigger points for department expansion. Improvements to public infrastructure and the expansion of services will have to be evaluated carefully as future development plans are presented to the Planning Commission.**

5. If there are reasons why the proposed zoning should not be approved in view of considerations under b (1) through (4) above, a determination as to whether the proposed zoning is justified and/or necessitated by peculiar circumstances such as:

   a. It would be impractical to use the land for any of the uses permitted under its existing zoning classifications;

   b. There are extenuating circumstances which justify the rezoning even though there are reasons under b (1) through (4) above why the proposed zoning is not desirable.

Finding: **N/A**

BUDGET/STAFF IMPACT:
None

ATTACHMENTS:
- Proposed zoning criteria
- Fire Department comments
- Applicant's letter
- Planned Zoning District materials
- Rezoning exhibit/survey
- Maps

161.21 Urban Thoroughfare

(A) *Purpose.* The Urban Thoroughfare District is designed to provide goods and services for persons living in the surrounding communities. This district encourages a concentration of commercial and mixed use development that enhances function and appearance along major thoroughfares. Automobile-oriented development is prevalent within this district and a wide range of commercial uses is permitted. For the purposes of Chapter 96: Noise Control, the Urban Thoroughfare district is a commercial zone. The intent of this zoning district is to provide standards that enable development to be approved administratively.

(B) *Uses.*

(1) Permitted uses

Unit 1	City-wide uses by right
Unit 4	Cultural and recreational facilities
Unit 5	Government facilities
Unit 8	Single-family dwellings
Unit 9	Two-family dwellings
Unit 10	Three-family dwellings
Unit 13	Eating places
Unit 14	Hotel, motel and amusement services
Unit 16	Shopping goods
Unit 17	Transportation trades and services
Unit 18	Gasoline service stations and drive-in/drive through restaurants
Unit 19	Commercial recreation, small sites
Unit 24	Home occupations
Unit 25	Offices, studios, and related services
Unit 26	Multi-family dwellings
Unit 34	Liquor store
Unit 41	Accessory Dwellings
Unit 44	Cottage Housing Development

Note: Any combination of above uses is permitted upon any lot within this zone. Conditional uses shall need approval when combined with pre-approved uses.

(2) Conditional uses

Unit 2	City-wide uses by conditional use permit
Unit 3	Public protection and utility facilities
Unit 20	Commercial recreation, large sites
Unit 21	Warehousing and wholesale
Unit 28	Center for collecting recyclable materials
Unit 29	Dance halls
Unit 33	Adult live entertainment club or bar
Unit 35	Outdoor music establishments
Unit 36	Wireless communication facilities
Unit 38	Mini-storage units
Unit 40	Sidewalk cafes
Unit 42	Clean technologies
Unit 43	Animal boarding and training

(C) *Density.* None

(D) *Bulk and area regulations.*

(1) Lot width minimum

Single-family dwelling	18 feet
All other dwellings	None
Non-residential	None

(2) Lot area minimum. None

(E) *Setback regulations.*

Front:	A build-to zone that is located between 10 feet and a line 25 feet from the front property line.
Side and rear:	None
Side or rear, when contiguous to a single-family residential district:	15 feet

(F) *Building height regulations.*

Building Height Maximum	56/84 ft.*

*A building or a portion of a building that is located between 10 and 15 ft. from the front property line or any master street plan right-of-way line shall have a maximum height of 56 feet. A building or portion of a building that is located greater than 15 feet from the master street plan right-of-way shall have a maximum height of 84 feet.

Any building that exceeds the height of 20 feet shall be set back from any boundary line of a single-family residential district, an additional distance of one foot for each foot of height in excess of 20 feet.

(G) *Minimum buildable street frontage.* 50% of the lot width.

(Ord. 5312, 4-20-10; Ord. 5339, 8-3-10; Ord. 5353, 9-7-10; Ord. 5462, 12-6-11; Ord. 5592, 6-18-13; Ord. 5664, 2-18-14)

161.19 Community Services

(A) *Purpose.* The *Community Services* district is designed primarily to provide convenience goods and personal services for persons living in the surrounding residential areas and is intended to provide for adaptable mixed use centers located along commercial corridors that connect denser development nodes. There is a mixture of residential and commercial uses in a traditional urban form with buildings addressing the street. For the purposes of Chapter 96: Noise Control, the Community Services district is a commercial zone. The intent of this zoning district is to provide standards that enable development to be approved administratively.

(B) *Uses.*

(1) *Permitted uses.*

Unit 1	City-wide uses by right
Unit 4	Cultural and recreational facilities
Unit 5	Government facilities
Unit 8	Single-family dwellings
Unit 9	Two-family dwellings
Unit 10	Three-family dwellings
Unit 13	Eating places
Unit 15	Neighborhood Shopping goods
Unit 18	Gasoline service stations and drive-in/drive through restaurants
Unit 24	Home occupations
Unit 25	Offices, studios and related services
Unit 26	Multi-family dwellings
Unit 44	Cottage Housing Development

Note: Any combination of above uses is permitted upon any lot within this zone. Conditional uses shall need approval when combined with pre-approved uses.

(2) *Conditional uses.*

Unit 2	City-wide uses by conditional use permit
Unit 3	Public protection and utility facilities
Unit 14	Hotel, motel and amusement services
Unit 16	Shopping goods
Unit 17	Transportation, trades and services
Unit 19	Commercial recreation, small sites
Unit 28	Center for collecting recyclable materials
Unit 34	Liquor stores
Unit 35	Outdoor music establishments
Unit 36	Wireless communication facilities*
Unit 40	Sidewalk Cafes
Unit 42	Clean technologies

(C) *Density. None*

(D) *Bulk and area regulations.*

(1) *Lot width minimum.*

Dwelling	18 ft.
All others	None

(2) *Lot area minimum.* None

(E) *Setback regulations.*

Front:	A build-to zone that is located between 10 feet and a line 25 feet from the front property line.
Side and rear:	None
Side or rear, when contiguous to a single-family residential district:	15 feet

(F) *Building Height Regulations.*

Building Height Maximum	56 ft.

(G) *Minimum buildable street frontage.* 50% of the lot width.

(Ord. 5312, 4-20-10; Ord. 5339, 8-3-10; Ord. 5462, 12-6-11; Ord. 5592, 6-18-13; Ord. 5664, 2-18-14)

161.26 Neighborhood Conservation

(A) *Purpose.* The *Neighborhood Conservation* zone has the least activity and a lower density than the other zones. Although *Neighborhood Conservation* is the most purely residential zone, it can have some mix of uses, such as civic buildings. *Neighborhood Conservation* serves to promote and protect neighborhood character. For the purposes of Chapter 96: Noise Control, the Neighborhood Conservation district is a residential zone.

(B) *Uses.*

(1) *Permitted uses.*

Unit 1	City-wide uses by right
Unit 8	Single-family dwellings
Unit 41	Accessory dwellings

(2) *Conditional uses.*

Unit 2	City-wide uses by conditional use permit
Unit 3	Public protection and utility facilities
Unit 4	Cultural and recreational facilities
Unit 9	Two-family dwellings
Unit 10	Three-family dwellings
Unit 12	Limited Business *
Unit 24	Home occupations
Unit 25	Offices, studios, and related services
Unit 28	Center for collecting recyclable materials
Unit 36	Wireless communication facilities
Unit 44	Cottage Housing Development

(C) *Density.* 10 Units Per Acre.

(D) *Bulk and area regulations.*

(1) *Lot width minimum.*

Single Family	40 ft.
Two Family	80 ft.
Three Family	90 ft.

(2) *Lot area minimum.* 4,000 Sq. Ft.

(E) *Setback regulations.*

Front	A build-to zone that is located between the front property line and a line 25 ft. from the front property line.
Side	5 ft.
Rear	5 ft.
Rear, from center line of an alley	12 ft.

(F) *Building height regulations.*

Building Height Maximum	45 ft.

(Ord. 5128, 4-15-08; Ord. 5312, 4-20-10; Ord. 5462, 12-6-11; Ord. 5592, 6-18-13; Ord. 5664, 2-18-14)

Fayetteville
ARKANSAS
www.accessfayetteville.org

THE CITY OF FAYETTEVILLE, ARKANSAS
FIRE DEPARTMENT
303 West Center Street
Fayetteville, AR 72701
P (479) 575-8365 F (479) 575-0471

Zoning Review

To: **Jesse Fulcher**
From: **Will Beeks**
Date: **May 8, 2014**
Re: **RZN 14-4729**

This development will be protected by Engine 6 located at 900 S Hollywood Ave.
It is 3.1 miles from the station with an anticipated response time of 7 minutes to the beginning of the development.
The Fayetteville Fire Department feels this development will have a moderate effect on our calls for service or our response times.

If you have any questions please feel free to contact me.

Will Beeks
Assistant Fire Marshal
Fayetteville Fire Department

April 24, 2014

Planning Commission City of Fayetteville, AR

Re: Rezone of the Chambers Bank property @ Cato Springs Rd.

- The property is currently owned by Chambers Bank.
- The need for rezoning the property stems from the complexity of its current PZD zoning structure and it is believed a more traditional zoning standard would help streamline the development process and understanding.
- The proposed zoning would be complimentary in use to the surrounding land uses and would be in line and in some instances more restrictive, with the zoning currently found in its PZD form. The proposed zoning would be in line with the existing traffic as well as the proposed master street plan. The proposed zoning would not affect signage.
- There is sewer available off site, which would require the development of a force main to provide adequate service. There is a both 12" and 8" water line adjacent to the property.
- The prosed zoning is believed to be consistent with the land use planning objectives by providing mixed use development in conjunction with a neighborhood development, while respecting the surrounding natural areas value and uses.
- The proposed zoning is justified as it exists in the current PZD, and is needed as its current PZD designation is both confusing and in some areas not in line with surrounding natural areas value and uses.
- The proposed zoning will not create an appreciable increased traffic danger, but would work to alleviate congestion by creating development along the City's Master Street Pan routes, i.e. the Shiloh Rd. extension.
- The proposed zoning would not alter population density but rather allow for controlled growth in an area of the city that is underdeveloped, along with positively contributing to the schools, and to the City's sewer and water systems.
- In some areas the existing zoning classification calls for uses that are not practical in certain areas and others that are in close proximity to sensitive and valuable natural areas.

Fulcher, Jesse

From: Hunter Haynes <hunter@hchconsulting.us>
Sent: Wednesday, June 04, 2014 9:21 AM
To: Fulcher, Jesse
Subject: Cato Springs Chambers Property Rezone
Attachments: hch rezone exhibit.pdf

Jesse:

As we discussed the proposed zoning designations and their respective locations yesterday, please find the attached to be a drawing showing the areas we are requesting to rezone on the Cato Springs/Chambers property. The areas are labeled according to the following, I have also included the requested zoning for each area below.

Area #1 - 78.78 acres - Request Urban Thoroughfare Area #2 - 97.11 acres - Request Community Services Area #3 - 54.03 acres - Request Neighborhood Conservation Tract #7 - 23.29 acres - Request Community Services

Upon review please do not hesitate with anything.

Thanks
hch

CITY COUNCIL
APPROVED
DATE: 11-04-08

SouthPass Master Development Plan

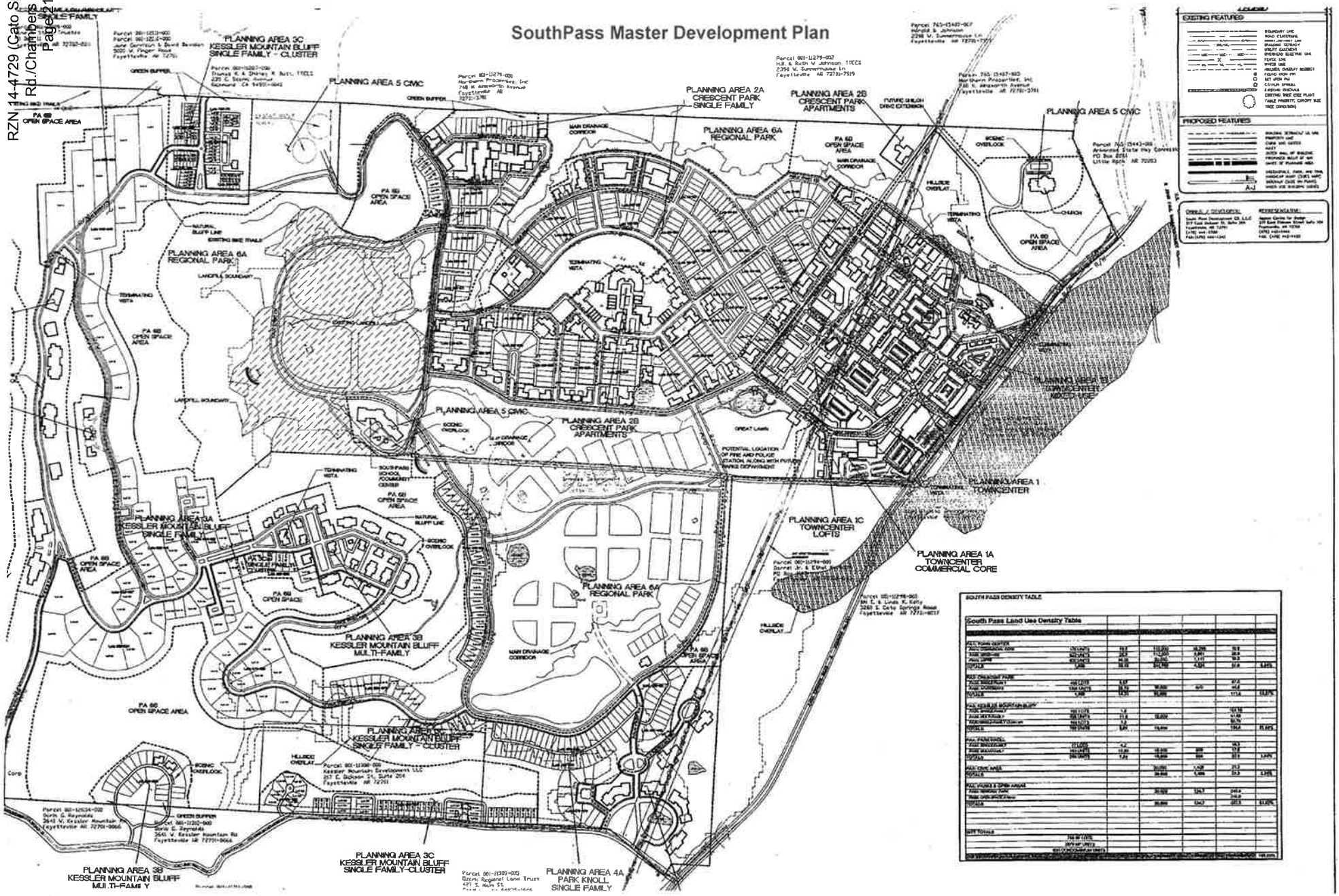

SouthPass Maste

Proposal: Master Development Plan of a Residential Planned Zoning District (R-PZD)

TABLE 1

SOUTH PASS LAND USE TABLE

PLANNING AREAS	ACREAGE	RESIDENTIAL UNITS	DENSITY (UNITS/ ACRE)	NON-RESIDENTIAL SF	INTENSITY (SF/ACRE)	% of ACRES
PA-1: TOWN CENTER						
PA1A: Commercial Core	10.90	175	16.06	112,000	10,275	
PA1B: Mixed Use	28.90	823	28.48	112,000	3,875	
PA1C: Lofts	18.00	630	35.00	20,000	1,111	
TOTALS	**57.80**	**1,628**	**28.17**	**244,000**	**4,221**	**6.35%**
PA-2: CRESCENT PARK						
PA2A: Single Family	67	400	5.97	0	0	
PA2B: Apartments	44.8	1,200	26.79	30,000	662	
TOTALS	**111.80**	**1,600**	**14.31**	**30,000**	**268**	**12.28%**
PA-3: KESSLER MOUNTAIN BLUFF						
PA3A: Single Family	104.16	103	1.00	0	0	
PA3B: Multi-Family	41.68	500	12.00	0	0	
PA3C: Single Family Cluster	50.22	171	3.41	0	0	
TOTALS	**196**	**774**	**3.95**	**0**	**0**	**21.54%**
PA-4: PARK KNOLL						
PA4A: Single Family	18.30	77	4.21	0	0	
PA4B: Multi-Family	17.60	183	10.40	10,000	568	
TOTALS	**36**	**260**	**7.22**	**10,000**	**279**	**3.94%**
PA-5: CIVIC AREA						
PA-5: CIVIC AREA	**21.30**	**0**	**0.00**	**30,000**	**1,408**	
TOTALS	**21.30**	**0**	**0.00**	**30,000**	**1,408**	**2.34%**
PA-6: PARKS AND OPEN SPACE						
PA6A: Regional Park	240.60	0	0.00	30,000	125	
PA6B: Open Space	246.90	0	0.00	0	0	
TOTALS	**487.50**	**0**	**0.00**	**30,000**	**62**	**53.55%**
SITE TOTALS		751 SF LOTS				
		2,881 MF UNITS				
		630 CONDO UNITS				
TOTAL SITE	**910.36**	**4,262**	**4.7**	**344,000**	**378**	**100.00%**

K:\Reports\2008\PC Reports\17-September 8\R-PZD 08-2989 (Southpass).doc

Table 2
SouthPass Project Description

Planning Area	Description
PA1: Town Center	The most compact, dense, and intense planning area is the Town Center, located in the northeast corner of the site along the arterial street of Cato Springs Road and just southwest of the I-540 intersection. The Town Center is based around a traditionally mixed use downtown form and features the center of commercial activity in the site. The design incorporates traditional town form design features including narrow streets, buildings close to the street, and wide urban sidewalks. There are several terminating vistas that will be focal points from the main thoroughfares. The Town Center provides non-residential amenities, restaurants, and shopping for residents in the immediate vicinity, and users of the adjacent 200+ acre regional park. The most urban and commercial area in the south transitions into a more mixed use area with non-residential uses at the street level and residences above. The topography in this area of the site rolls gently.
PA2: Crescent Park	The new extension of Shiloh Road defines the edge between Town Center and the Crescent Park neighborhood. Crescent Park starts ascending Kessler Mountain to the west of Town Center. This neighborhood fronts Shiloh Road with a number of multi-family buildings and row homes. Continuing west the neighborhood transitions to single family residential, then the density increases again with a number of multi-family buildings that front onto either public streets or shared green areas or courtyard. The center of Crescent Park contains a common destination for the pedestrian-shed in this neighborhood on a hilltop with wide vistas of Fayetteville and the surrounding countryside. A community meeting place and large central green are located in the interior.
PA3: Kessler Mountain Bluff	This neighborhood is located along the ridgelines, knolls, and hilltops of Kessler Mountain in the western portion of the site. This area is isolated from the Town Center by topography and the new regional park. This neighborhood provides a variety of residential housing options from large rural lots on the hillside, to dense clusters of multi-family and single family lots. The layout of the development pattern incorporates the natural contours of the landform and the roads wind along the ridges and in and out of densely forested areas. This area of the site has a variety of topography changes and landforms and currently has a number of informal hiking and mountain biking trails that have been incorporated into the design. This trail system will provide opportunities for all residents to connect from this neighborhood to the regional park down below the mountain.
PA4: Park Knoll	This neighborhood is located in the southeast portion of the site on a knoll adjacent to Cato Springs Road that is approximately 80 feet above the planned regional park adjacent to the north. This neighborhood provides a variety of detached and attached homes on small lots designed for adults 55 and older. Shared indoor and outdoor amenities will be provided in courtyards and in the larger multi-family buildings.
PA5: Civic Areas	This planning area is comprised of three distinct areas including a church located on a knoll in the northern portion of the site, an elementary school in the central portion of the site, and the existing water tank site. Both the school and church are set apart from the Town Center, taking in views.
PA6: Regional Park and Open Space	A primary feature of this planning area is the active sports park with soccer, baseball, softball, and multi-purpose fields for various "pick-up" games. An area for tennis courts will be situated near parking lots and playgrounds. The organized fields will have bleachers, concession stands, and restroom facilities. An amphitheatre is located along the park road for concerts and other events. New police and fire substations will also be within this planning area. The existing 33-acre landfill is located in this planning area and will be remediated and may be used for active recreation and forested area. Over 246 acres of this planning area is designated for open space and will serve as preservation areas for natural drainage systems, tree preservation areas, and natural buffers between SouthPass and surrounding rural-residential uses. An extensive trail system in this planning area provides non-vehicular linkages through the development.

G. Zoning Comparison Chart

Description	Current County Zoning	Current City Zoning R-A	PA-1A Town Center Commercial Core	PA-1B Town Center Mixed-Use	PA-1C Town Center Lofts	PA-2A Crescent Park Single-Family	PA-2B Crescent Park Apartments	PA-3A Kessler Mtn. Bluff Single Family
Permitted Use Units Allowed	Unit 6 Agriculture Unit 8 Single-family dwellings	Unit 1 City-wide uses by right Unit 3 Public Protection and Utility Facilities Unit 5 Agriculture Unit 7 Animal Husbandry Unit 8 Single-family dwellings Unit 9 Two-family dwellings Unit 37 Manufactured Homes	Unit 1 City-wide uses by right Unit 4 Cultural and recreational facilities Unit 5 Government facilities Unit 12 Offices, studios, and related services Unit 13 Eating places Unit 14 Hotel, motel, and amusement facilities Unit 15 Neighborhood shopping Unit 16 Shopping goods Unit 19 Commercial recreation, small sites Unit 24 Home occupations Unit 25 Professional offices Unit 26 Multi-family dwellings Unit 34 Liquor store	Unit 1 City-wide uses by right Unit 4 Cultural and recreational facilities Unit 5 Government facilities Unit 12 Offices Studios, etc Unit 13 Eating Facilities Unit 14 Hotel, Motel and amusement Unit 15 Neighborhood Shopping Goods Unit 16 Shopping Goods Unit 19 Commercial recreation, small sites Unit 24 Home Occupations Unit 25 Professional Offices Unit 26 Multi-family Dwellings Unit 34 Liquor Stores	Unit 1 City-wide uses by right Unit 3 Public Protection and Utility Facilities Unit 4 Cultural and Recreational Facilities Unit 5 Government Facilities Unit 10 Three-family Dwellings Unit 12 Offices Studios, etc Unit 14 Hotel, Motel and amusement Unit 24 Home Occupations Unit 26 Multi-family Dwellings Accessory Dwellings	Unit 1 City-wide uses by right Unit 8 Single Family Dwellings	Unit 1 City-wide uses by right Unit 9 Two-Family Dwellings Unit 10 Three-Family Dwellings Unit 12 Offices Studios, etc Unit 26 Multi-Family Dwellings	Unit 1 City-wide uses by right Unit 8 Single Family Dwellings
Conditional Use Units Allowed	By review of Washington County Planning Board	Unit 2 City wide uses by conditional use permit Unit 4 Cultural and recreational facilities Unit 5 Government facilities Unit 20 Commercial recreation, large sites Unit 24 Home occupations Unit 36 Wireless Communication facilities	Unit 2 City-wide uses by conditional use permit Unit 29 Dance Halls Unit 35 Outdoor music establishment Unit 40 Sidewalk cafes	Unit 2 City-wide uses by conditional use permit Unit 29 Dance Halls Unit 35 Outdoor Music Establishment Unit 40 Sidewalk cafes	Unit 2 City-wide uses by conditional use permit Unit 13 Eating Facilities Unit 15 Neighborhood Shopping Goods Unit 16 Shopping Goods Unit 25 Professional Offices Unit 40 Sidewalk cafes	Unit 2 City-wide uses by conditional use permit Unit 3 Public Protection and Utility Facilities Unit 4 Cultural and Recreational Facilities Unit 5 Government Facilities Unit 9 Two-Family Dwellings Unit 24 Home occupation Unit 25 Professional Offices Accessory Dwellings	Unit 2 City-wide uses by conditional use permit Unit 3 Public Protection and Utility Facilities Unit 4 Cultural and Recreational Facilities Unit 5 Government Facilities Unit 13 Eating Places Unit 15 Neighborhood Shopping Goods Unit 24 Home Occupation Unit 25 Professional Offices Unit 40 Sidewalk Cafes	Unit 2 City-wide uses by conditional use permit Unit 3 Public Protection and Utility Facilities Unit 4 Cultural and Recreational Facilities Unit 5 Government Facilities Unit 9 Two-Family Dwellings Unit 10 Three-Family Dwellings Unit 24 Home Occupation Unit 25 Professional Offices
Lot Width Minimum	Single-family 75 ft	200 ft minimum	No Minimum	No Minimum	No Minimum	32 ft	40 ft	Lots 1-52 shall have a minimum lot width of 80 Lots 53-103 shall have a minimum lot width of 60 feet
Lot Area Minimum	Single-family 1 acre	2 acres	No Maximum	No Maximum	N/A	2,800 sq ft	Minimum 1,200 sq ft for live house office of community, 900 sq ft for town-homes 6,000 sq ft for a typical lot	Lots 1-52 shall have a 10,000sq ft lot width minimum Lots 53-103 shall have 5,000sq ft lot width minimum
Land Area per Dwelling Unit	Single-family 1 acre	2 acres	No Bedroom 670 sq ft One Bedroom 800 sq ft Two or more Bedrooms 1,000 sq ft minimums	No Bedroom 670 sq ft One Bedroom 800 sq ft Two or more Bedrooms 1,000 sq ft minimums	No Bedroom 670 sq ft One Bedroom 800 sq ft Two or more Bedrooms 1,000 sq ft minimums	Single-Family 2,800 sq ft	No Bedroom 670 sq ft One Bedroom 800 sq ft Two or more Bedrooms 1,000 sq ft minimums	Single-Family 5,000 sq ft
Density	Single-family 1 unit per acre	0.5 unit/acre	16 Units per acre or less 10,266 sq ft per acre or less	28.5 Units per acre or less 3,881 sq ft per acre or less	35 Units per acre or less 1,111 sq ft per acre or less	5.97 Units per acre or less	26.79 Units per acre or less 662 sq ft per acre or less	1 Units per acre or less
Setback Requirements	Front 25 ft Side 10 ft Rear 25 ft	Front 35 ft Side 20 ft Rear 35 ft	Front - 75% of the lot width at the street frontage shall be covered by buildings at the right-of-way line. The BTL does not apply to Cato Springs Rd and Judge Cummings Rd Side Internal - 0 ft Side Adjacent Lot - 5 ft Side Street - 6 ft Rear - 0 ft	Front - 70% of building frontage is required to be built up to the Build to Line Side Internal- 0 ft Side Adjacent Lot - 5 ft Side Street - 6 ft Rear - 0 ft	Front - 50% of building frontage is required to be built up to the Build to Line Side Internal - 0ft Side Adjacent Lot - 5ft Side Street - 6ft Rear - 0ft	Front - Minimum - 8 ft Maximum - 15 ft Side - 6' from wall 4' from eave 0' on opposite P/L Rear - 0 ft Rear Garage - 7.5 ft If abutting alley from rear lot line	Front - Shall be setback in a 0' to 15' Build to Zone measured from the ROW Side - 6' from wall 4' from eave 0' on opposite P/L Rear - 0 ft Rear Garage - 7.5 ft If abutting alley from rear lot line	Front - Minimum - 0 ft Maximum - 15 ft Side - 6' from wall 4' from eave 0' on opposite P/L Rear - 0 ft Rear Garage - 7 ft
Height Regulations	None	Any building over 15 ft shall be set back from and boundary line of any residential district a distance of one foot per each foot of height in excess of 15 ft	20 ft minimum 55 ft maximum	24 ft minimum 80 ft maximum	24 ft minimum 80 ft maximum	Primary Building - Minimum - 24 ft Maximum - 45 ft	Minimum Height - 24 ft Maximum Height - 60 ft	Maximum Height - 45'
Building Area	Not to exceed 40% of total lot area	None	No Minimum	N/A	N/A	80% Maximum	70% Maximum	70% Maximum

© 2008 Appian Centre for Design, Inc

Description	PA-3B Kessler Mtn. Bluff Multi-Family	PA-3C Kessler Mtn. Bluff Single Family Cluster	PA-4A Park Knoll Single Family	PA-4B Park Knoll Multi Family	PA-5 Civic Areas	PA-6A Regional Park	PA-6B Open Space Area
Permitted Use Units Allowed	Unit 1 City - wide uses by right Unit 8 Single-Family Dwellings Unit 9 Two-family Dwellings Unit 10 Three-family Dwellings Unit 26 Multi-Family Dwellings	Unit 1 City-wide uses by right Unit 8 Single Family Dwellings Accessory Dwellings	Unit 1 City-wide uses by right Unit 8 Single Family Dwellings Unit 9 Two-family Dwellings Unit 10 Three-family Dwellings Accessory Dwellings	Unit 1 City-wide uses by right Unit 9 Two-family Dwellings Unit 10 Three-family Dwellings Unit 26 Multi-family Dwellings	Unit 1 City-wide uses by right Unit 4 Cultural and recreational facilities Unit 5 Government facilities	Unit 1 City-wide uses by right Unit 4 Cultural and recreational facilities Unit 5 Government facilities	Unit 1 City-wide uses by right
Conditional Use Units Allowed	Unit 2 City-wide uses by conditional use permit Unit 3 Public Protection and Utility Facilities Unit 4 Cultural and Recreational Facilities Unit 5 Government Facilities Unit 13 Eating Places Unit 15 Neighborhood Shopping Goods Unit 24 Home Occupation Unit 25 Professional Offices Unit 40 Sidewalk Cafes	Unit 2 City-wide uses by conditional use permit Unit 3 Public Protection and Utility Facilities Unit 4 Cultural and Recreational Facilities Unit 5 Government Facilities Unit 9 Two-family Dwellings Unit 13 Eating Places Unit 15 Neighborhood Shopping Goods Unit 24 Home Occupation Unit 25 Professional Offices Unit 26 Multi-family Dwellings	Unit 2 City-wide uses by conditional use permit Unit 3 Public Protection and Utility Facilities Unit 4 Cultural and Recreational Facilities Unit 5 Government Facilities Unit 24 Home Occupation	Unit 2 City-wide uses by conditional use permit Unit 3 Public Protection and Utility Facilities Unit 4 Cultural and Recreational Facilities Unit 5 Government Facilities Unit 13 Eating Places Unit 15 Neighborhood Shopping Goods Unit 24 Home Occupation Unit 25 Professional Offices Unit 40 Sidewalk Cafes	Unit 2 City-wide uses by conditional use permit Unit 3 Public Protection and Utility Facilities	Unit 2 City-wide uses by conditional use permit Unit 3 Public Protection and Utility Facilities Unit 20 Commercial Recreation Large Sites	Unit 2 City-wide uses by conditional use permit Unit 4 Cultural and Recreational Facilities Unit 20 Commercial Recreation Large Sites
Lot Width Minimum	60 ft	Lots 1-54 shall have a minimum lot width of 24 feet Lots 55-106 shall have a minimum lot width of 50 feet Lots 107-168 shall have a minimum lot width of 40 feet	35 ft	40 ft	No Minimum	N/A	N/A
Lot Area Minimum	4 000 sq ft	Lots 1-54 shall have a 2 500 sq ft lot area minimum Lots 55-106 shall have a 8 000 sq ft lot area minimum Lots 107-168 shall have a 5 000 sq ft lot area minimum	3 000 sqft	Minimum 1,200sq ft for live/work, office, or community commercial 900sq ft for townhomes 6,000sq ft for typical lot	No Minimum	N/A	N/A
Land Area per Dwelling Unit	No Bedroom 670 sq ft One Bedroom 800 sq ft Two or more Bedrooms 1,000 sq ft minimums	Single-Family 2,400 sqft	Single-Family 3,000 sqft	No Bedroom 670 sq ft One Bedroom 800 sq ft Two or more Bedrooms 1,000 sq ft minimum	N/A	N/A	N/A
Density	12 Units per acre or less 159 sq ft per acre or less	3 4 Units per acre or less	4 2 Units per acre or less	10 5 units per acre	1,408 sqft per acre or less	124 7 sqft per acre or less	N/A
Setback Requirements	Front - Minimum - 0 ft Maximum - 15 ft Side - 6' from wall 4' from eave 0' on opposite P/L Rear - 7 ft Rear Garage - 7 5 ft If abutting alley from rear lot line	Front - Minimum - 0 ft Maximum - 15 ft Side - 6' from wall 4' from eave 0' on opposite P/L Rear - 7 ft Rear Garage - 7 5 ft If abutting alley from rear lot line	Front - 8 ft Side - 6' from wall 4' from eave 0' on opposite P/L Rear - 7 ft Rear Garage - 7 5 ft If abutting alley from rear lot line	Front - Shall be setback in a 10' to 25' Build to Zone measured from the ROW Side - 6' from wall 4' from eave 0' on opposite P/L Rear - 7 ft Rear Garage - 7 ft	Front - Minimum - 10ft Side - 8 ft Rear - 7 ft Rear Garage - N/A	Front - Minimum 20 ft Side - Minimum 15 ft Rear - Minimum 15 ft	Front - Minimum 20 ft Side - Minimum 15 ft Rear - Minimum 15 ft
Height Regulations	40 ft max	45 ft max	45 ft max	60 ft max	Minimum Height - 24 ft Maximum Height - 60 ft	40 ft	N/A
Building Area	80% Maximum	70% Maximum	70% Maximum	70% Maximum	70% Maximum	N/A	N/A

© 2008 Appian Centre for Design, Inc

© 2008 Appian Centre for Design, Inc.

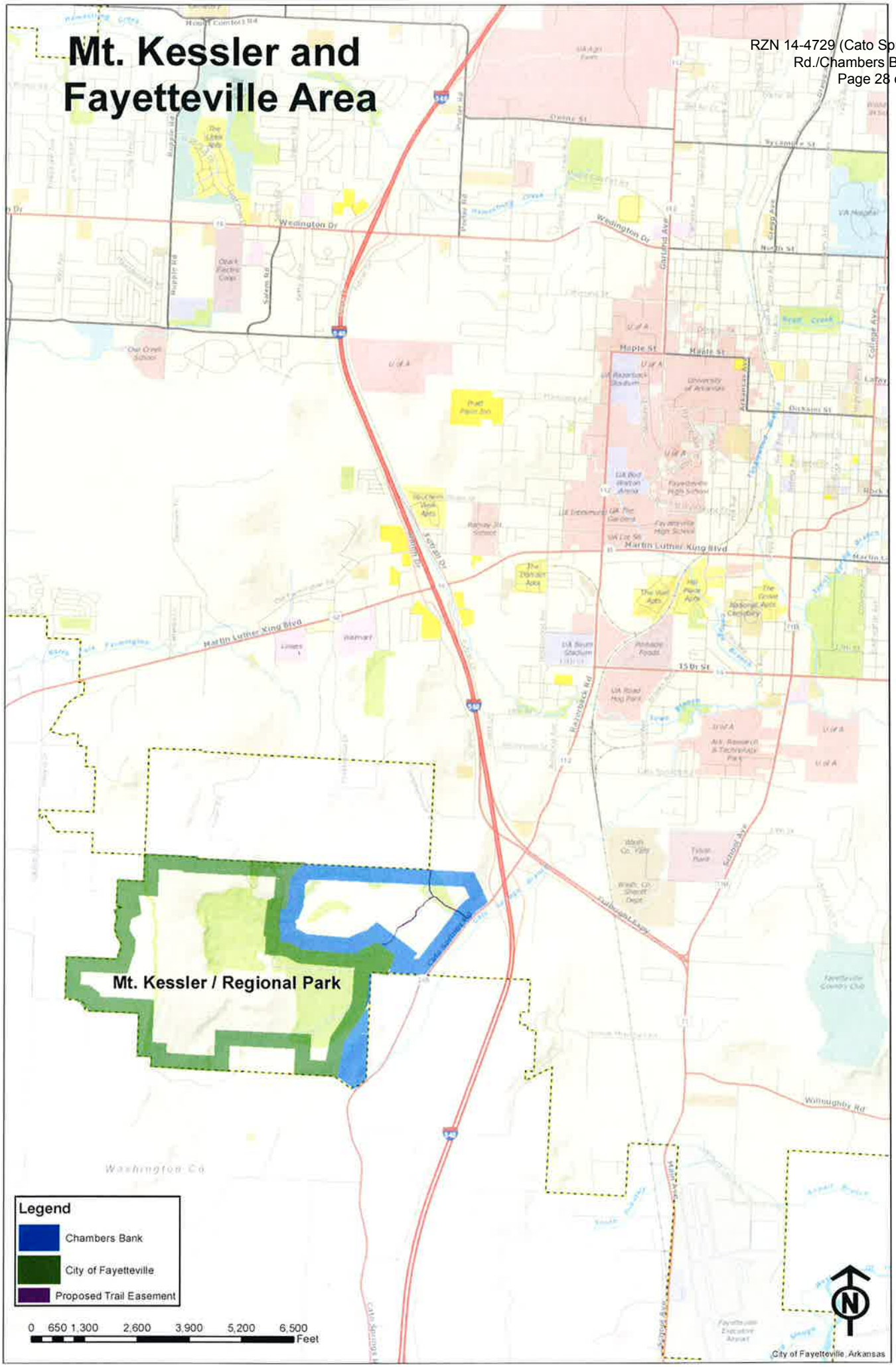
Mt. Kessler and Fayetteville Area
Mt. Kessler / Regional Park
Legend
Chambers Bank
City of Fayetteville
Proposed Trail Easement
0 650 1,300 2,600 3,900 5,200 6,500
Feet
City of Fayetteville, Arkansas

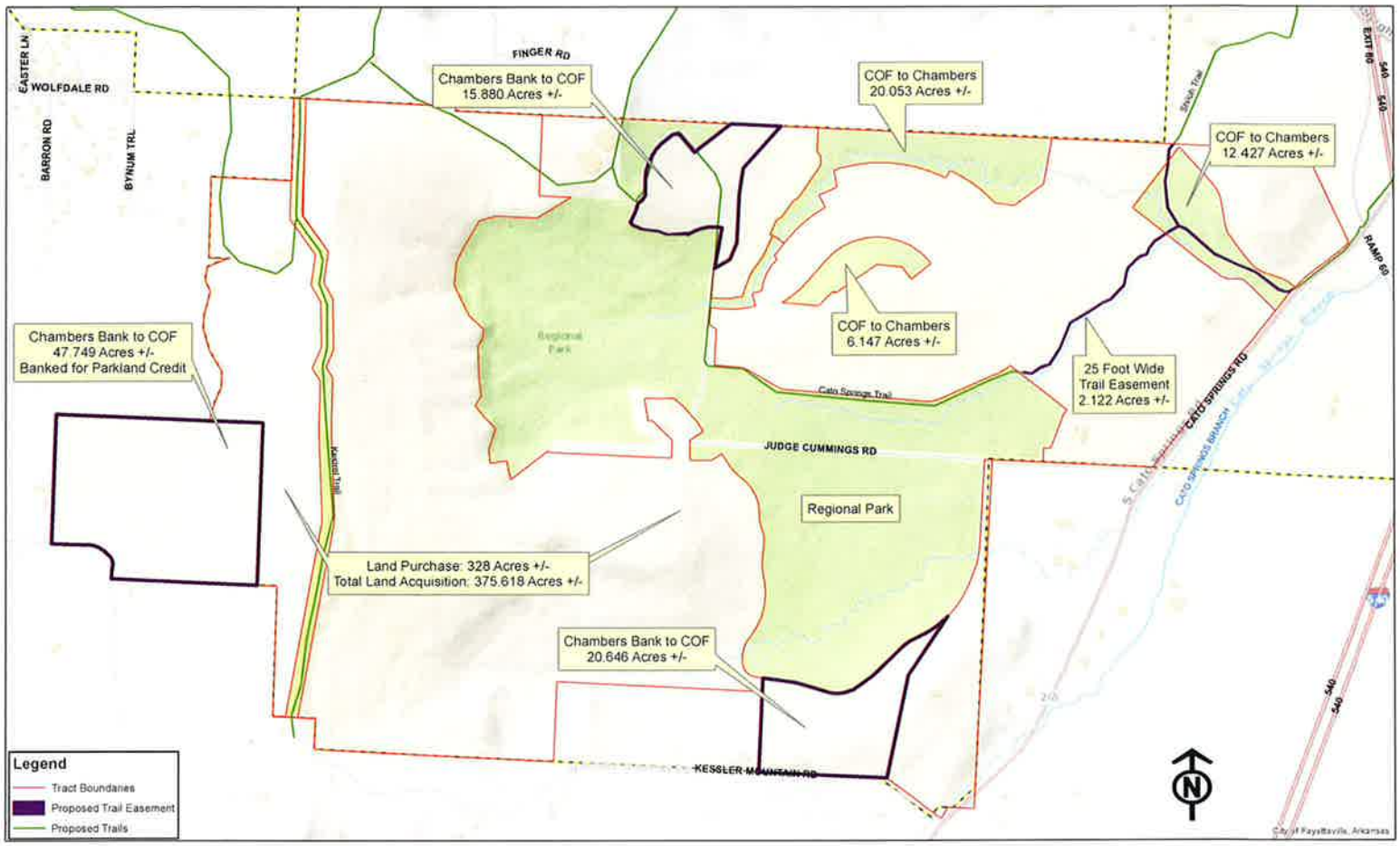

0 225 450 900 1,350 1,800 2,250 Feet

Mt. Kessler / Regional Park

February 3rd, 2014 Fayetteville

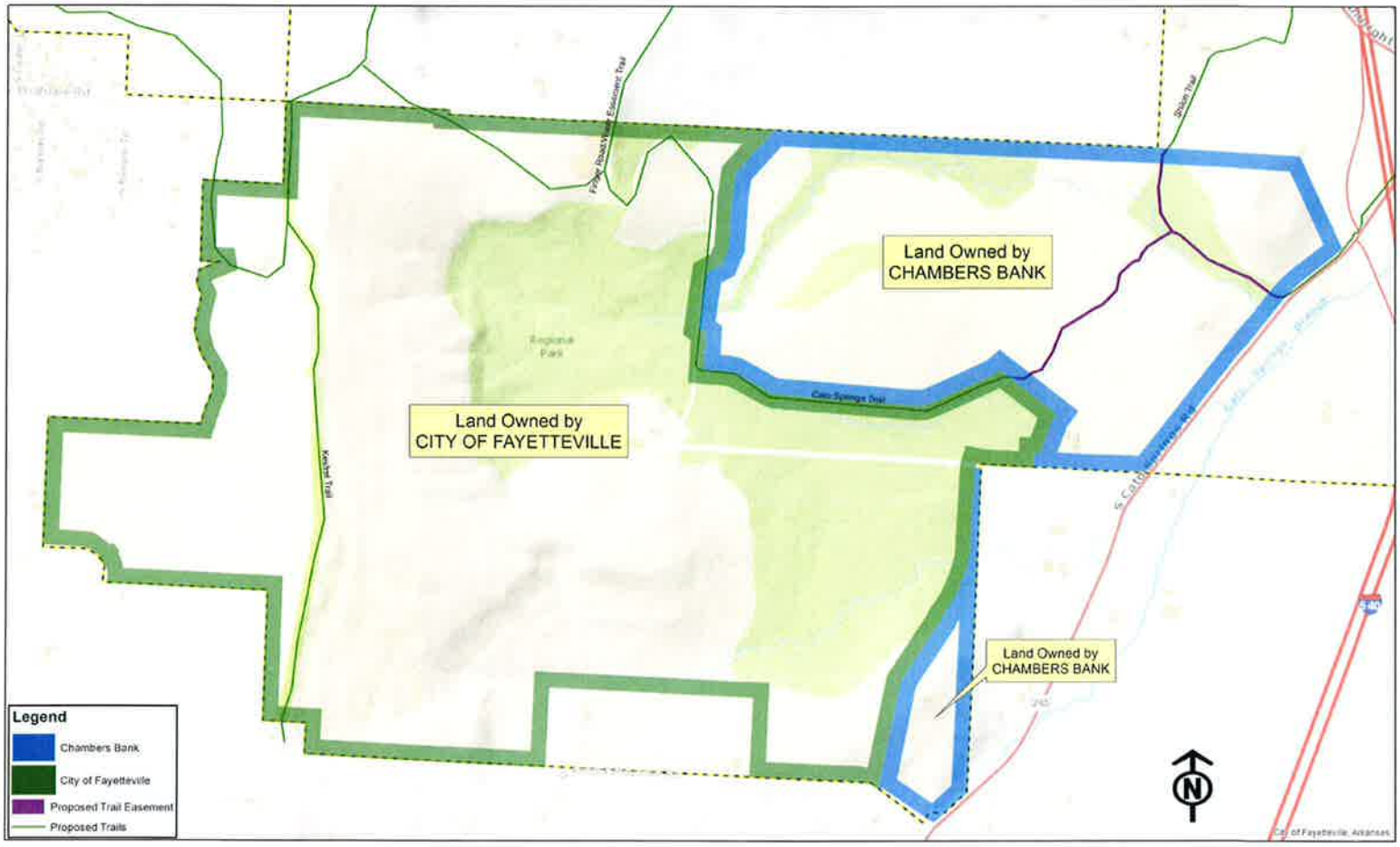
Land Owned by
CHAMBERS BANK
Land Owned by
CITY OF FAYETTEVILLE
Land Owned by
CHAMBERS BANK
Cato Springs Trail
Kessler Trail
Shiloh Trail
Legend
Chambers Bank
City of Fayetteville
Proposed Trail Easement
Proposed Trails
0 225 450 900 1,350 1,800 2,250
Feet
Mt. Kessler / Regional Park
February 3rd, 2014
Fayetteville

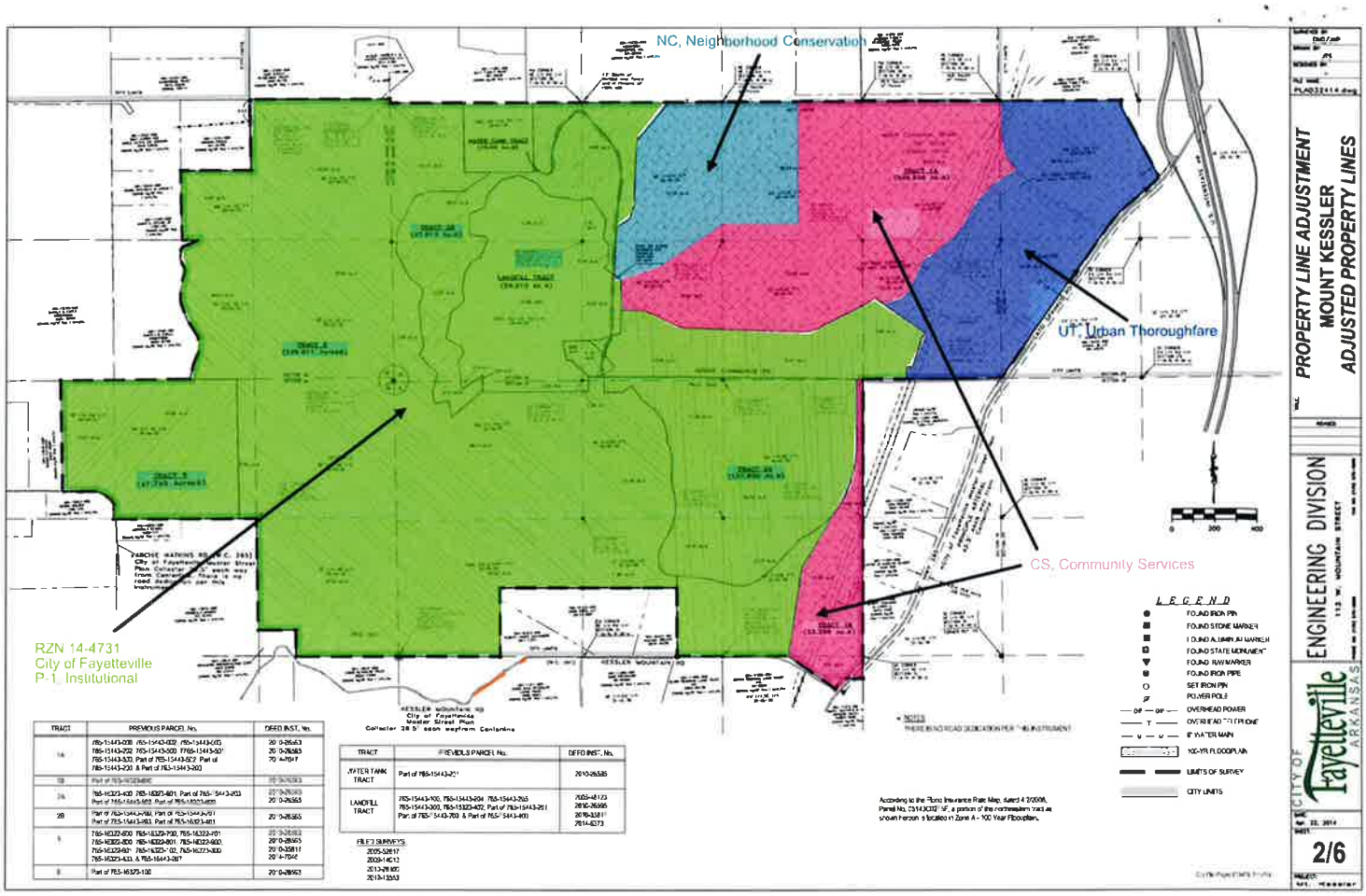
NC, Neighborhood Conservation
UT, Urban Thoroughfare
CS, Community Services
RZN 14-4731
City of Fayetteville
P-1, Institutional
PROPERTY LINE ADJUSTMENT
MOUNT KESSLER
ADJUSTED PROPERTY LINES
ENGINEERING DIVISION
CITY OF Fayetteville ARKANSAS
2/6
LEGEND
FOUND IRON PIN
FOUND STONE MARKER
FOUND ALUMINUM MARKER
FOUND STATE MONUMENT
FOUND NAIL MARKER
FOUND IRON PIPE
SET IRON PIN
POWER POLE
OVERHEAD POWER
OVERHEAD TELEPHONE
8" WATER MAIN
100-YR FLOODPLAIN
LIMITS OF SURVEY
CITY LIMITS
0 200 400

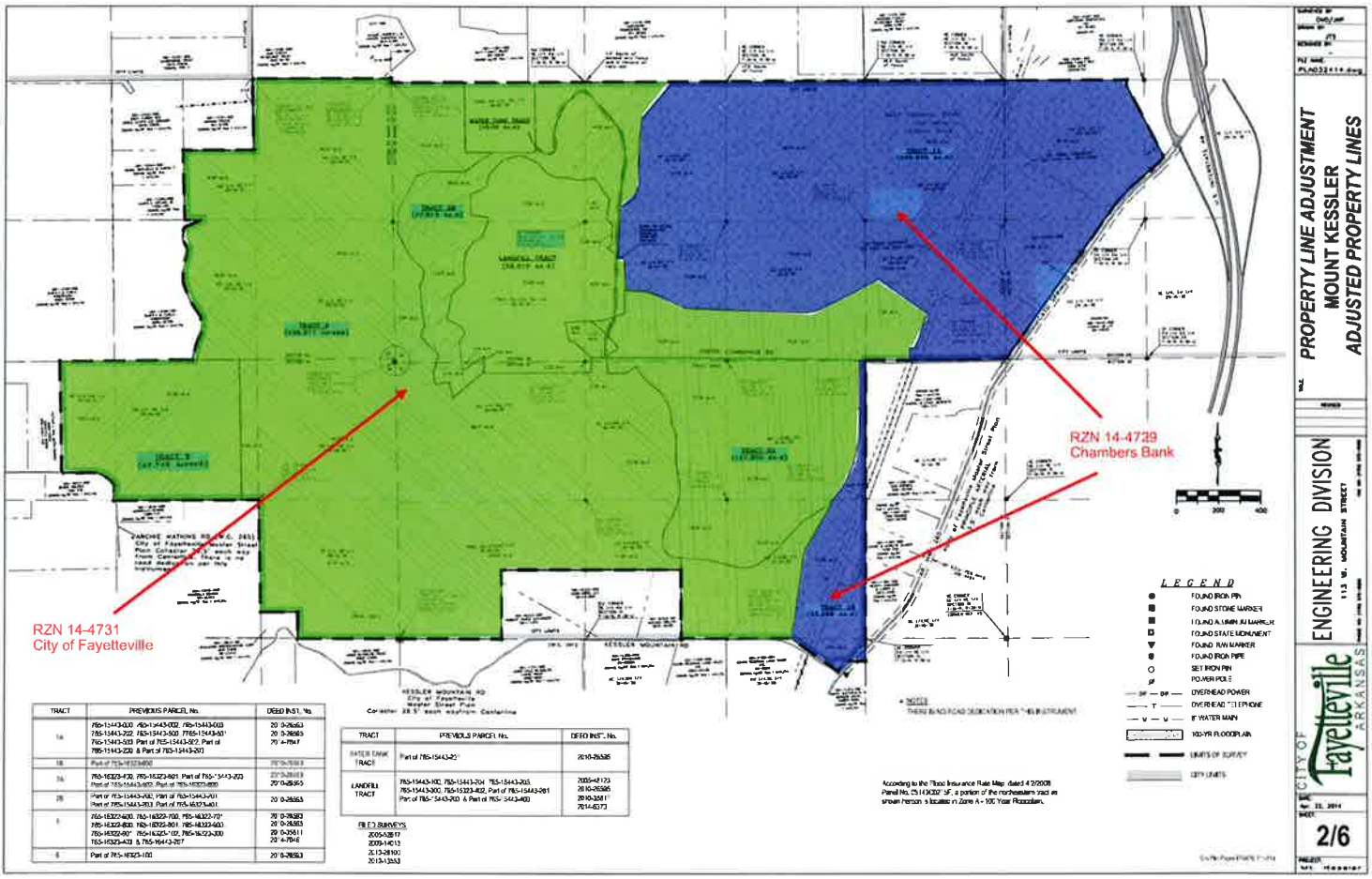

TRACT	PREVIOUS PARCEL No.	DEED INST. No.
1a	765-15443-000, 765-15443-002, 765-15443-003, 765-15443-222, 765-15443-500, 765-15443-501, 765-15443-502, Part of 765-15443-502, Part of 765-15443-220, & Part of 765-15443-201	20 0-26563 20 0-26565 70 4-7847
1b	Part of 765-16323-400	2010-26565
1c	765-16323-430, 765-16323-601, Part of 765-15443-223, Part of 765-15443-402, Part of 765-16323-600	2010-26565 20 0-26565
2b	Part of 765-15443-402, Part of 765-15443-401, Part of 765-15443-303, Part of 765-16323-401	20 0-26563
3	765-16323-400, 765-16323-700, 765-16323-701, 765-16323-800, 765-16323-801, 765-16323-600, 765-16323-901, 765-16325-102, 765-16323-300, 765-16323-403 & 765-16443-207	20 0-26563 20 0-26563 20 0-25611 20 4-7846
4	Part of 765-16323-100	20 0-26563

TRACT	PREVIOUS PARCEL No.	DEED INST. No.
WATER TANK TRACT	Part of 765-15443-201	2010-26565
LANDFILL TRACT	765-15443-100, 765-15443-204, 765-15443-203, 765-15443-300, 765-16323-402, Part of 765-15443-201, Part of 765-15443-203 & Part of 765-15443-400	2005-4723 2010-26565 2010-3581 2014-6373

RZN14-4729

Current Land Use

CHAMBERS BANK

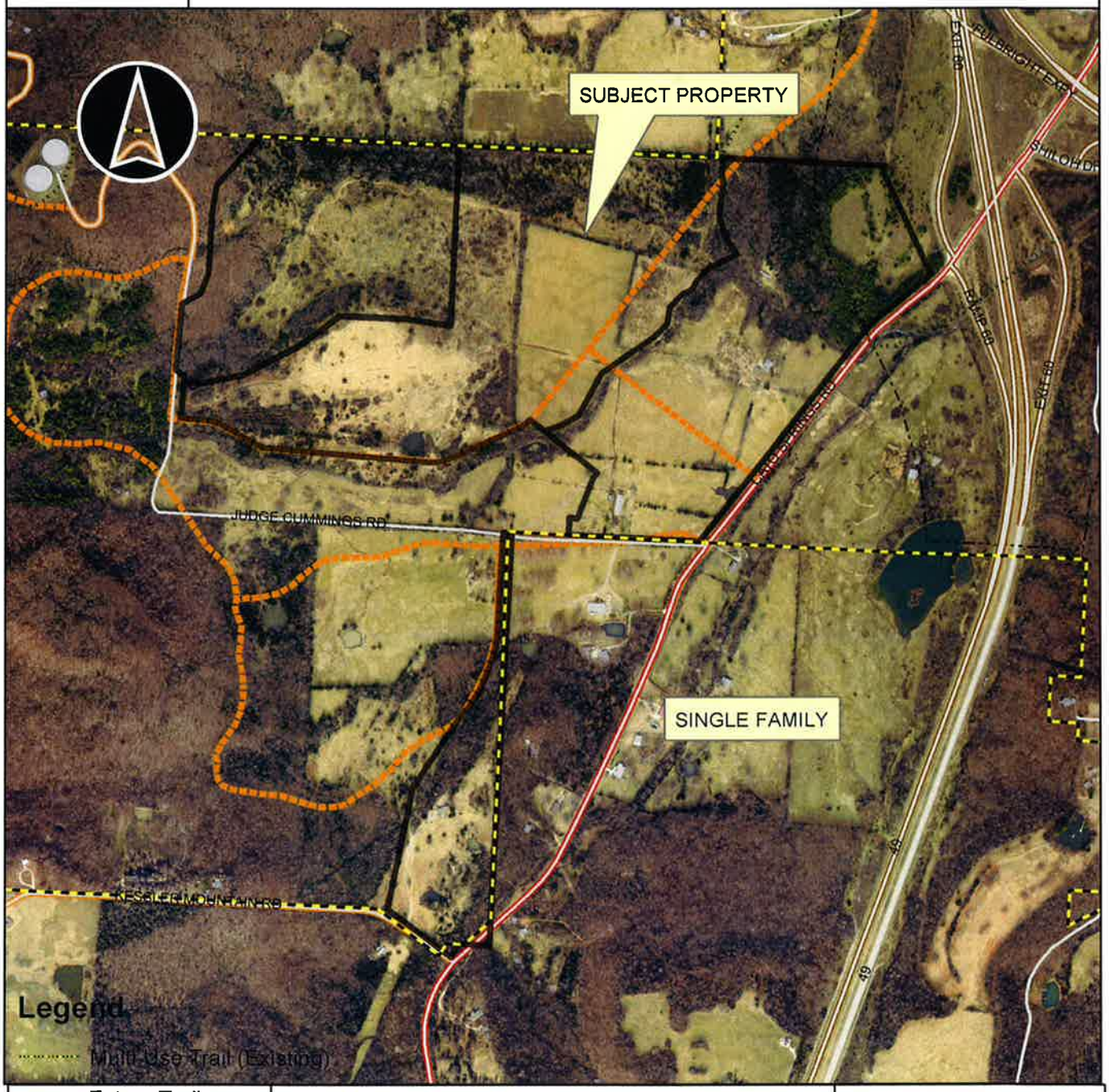

Overview

- Future Trails
- Fayetteville City Limits
- RZN14-4729
- Footprints 2010
- Design Overlay District
- Planning Area

0 450 900 1,800 2,700 3,600 Feet

RZN14-4729

Close Up View

CHAMBERS BANK

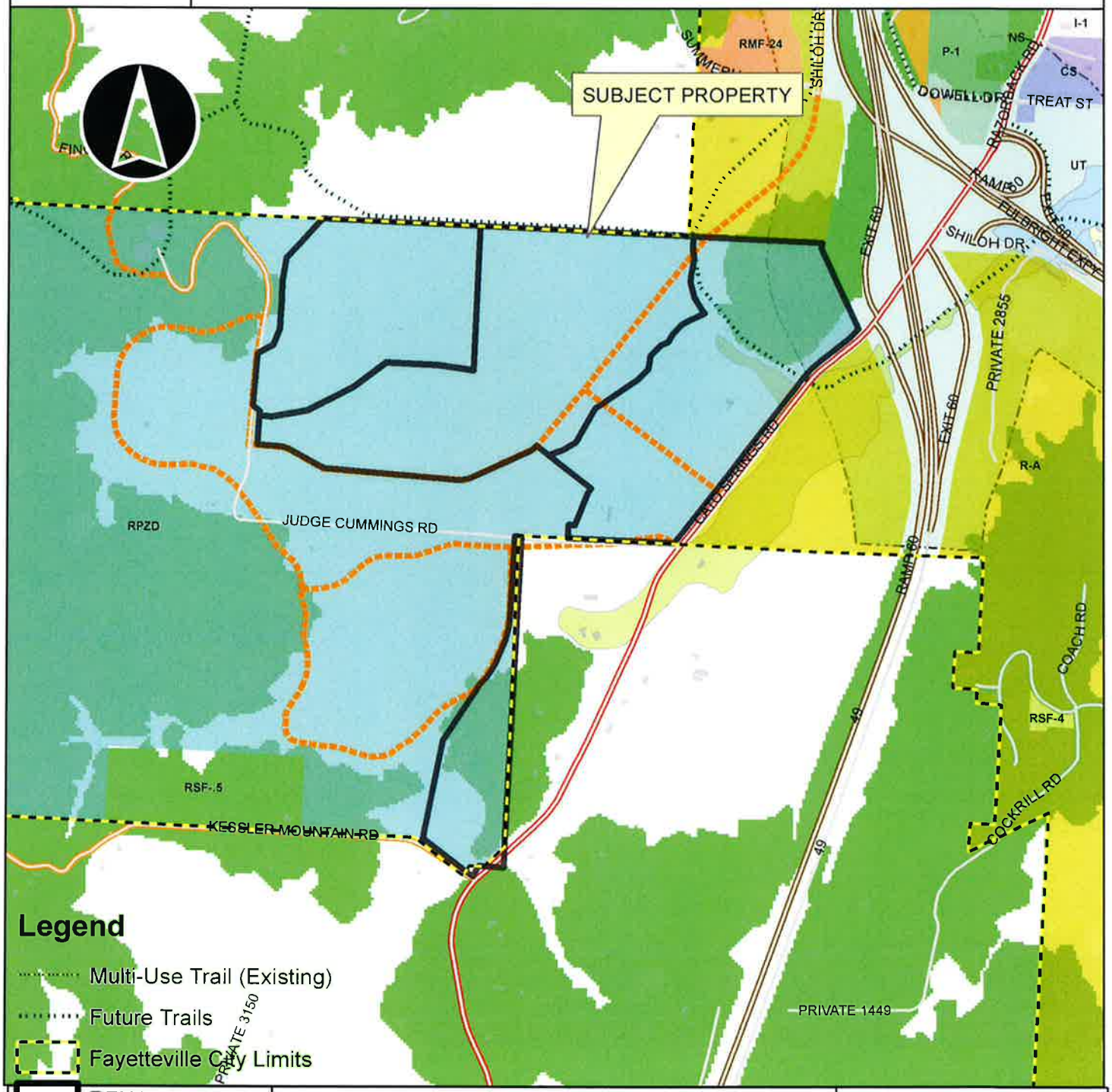

Legend

- Multi-Use Trail (Existing)
- Future Trails
- Fayetteville City Limits
- Overview RZN14-4729
- Footprints 2010
- Hillside-Hilltop Overlay District
- Design Overlay District
- Design Overlay District
- Planning Area

0 450 900 1,800 2,700 3,600 Feet

RZN14-4729

Future Land Use

CHAMBERS BANK

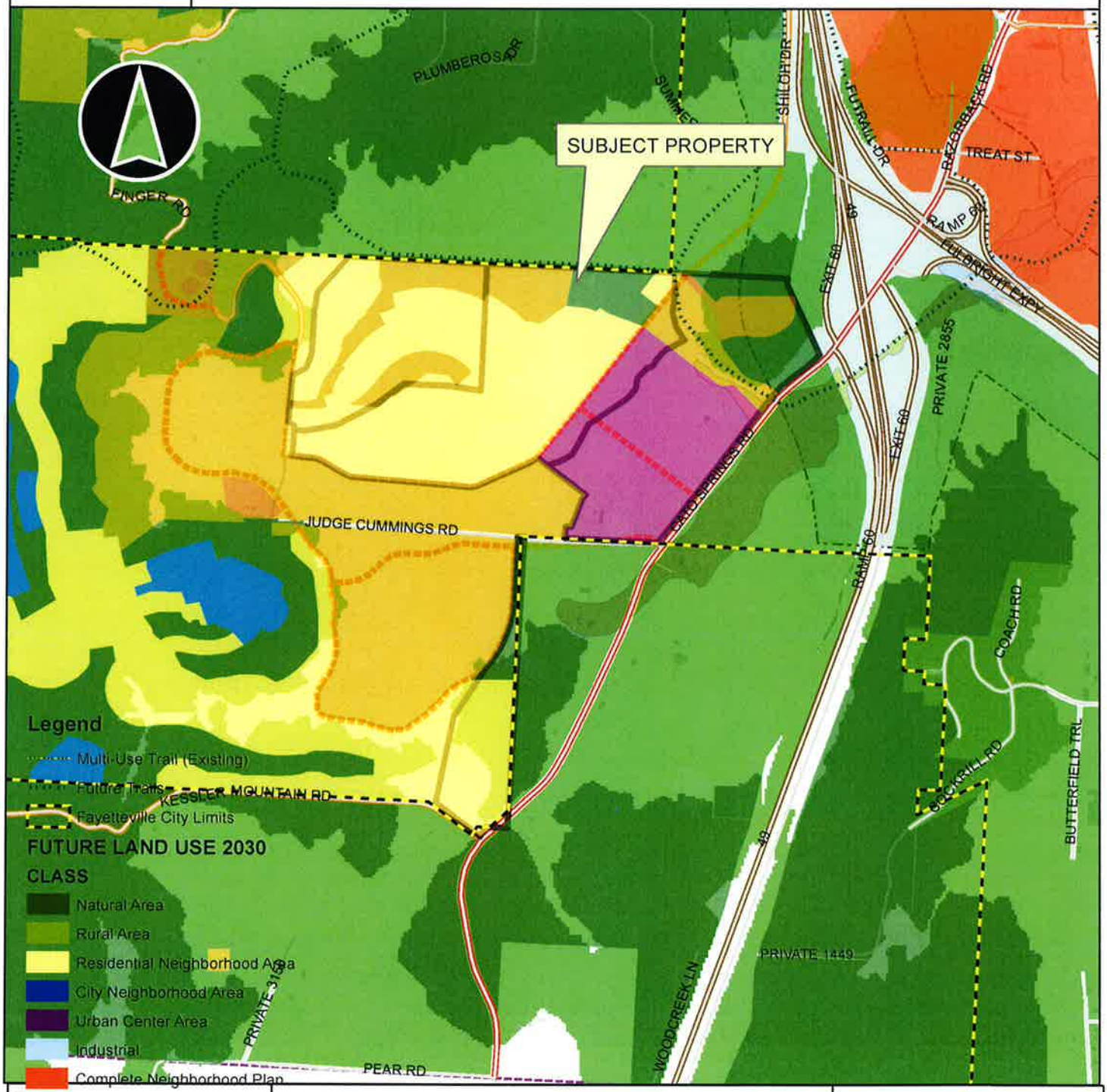

RZN14-4729

One Mile View

CHAMBERS BANK

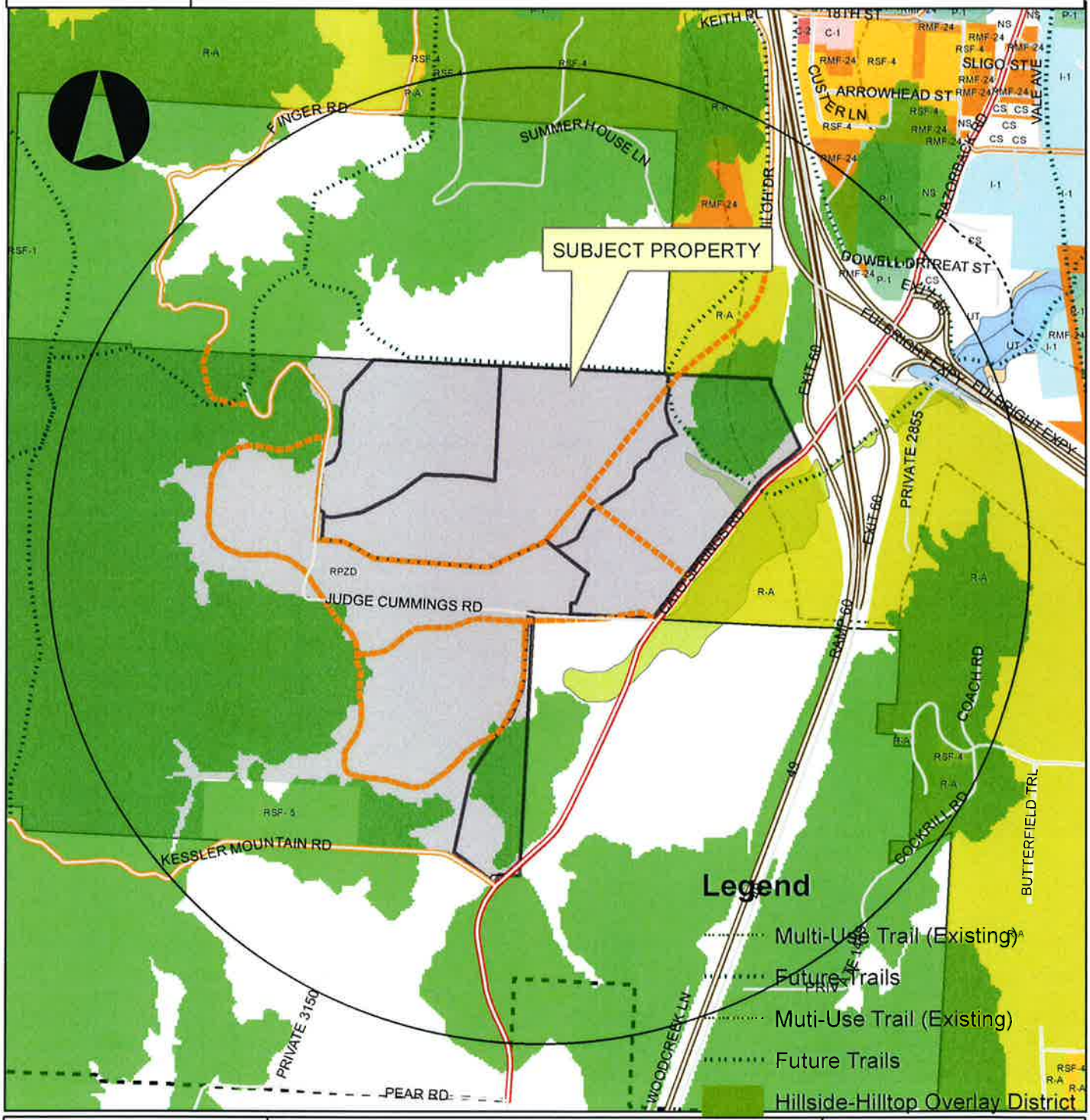

Overview

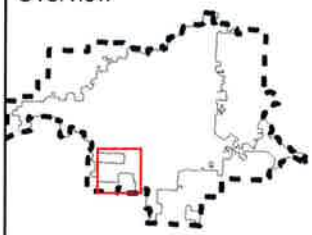

Legend

Subject Property

RZN14-4729

Boundary

RZN14-4729

Design Overlay District

Planning Area

Fayetteville

0 0.25 0.5 1 Miles

City of Fayetteville Item Review Form

2014-0266

Legistar File Number

07/15/2014

City Council Meeting Date - Agenda Item Only

N/A for Non-Agenda Item

Jesse Fulcher

Submitted By

Development Services

Department

Action Required:

RZN 14-4731: Rezone (REGIONAL PARK/MT. KESSLER RESERVE, 673): Submitted by CITY STAFF for property located at REGIONAL PARK/MT. KESSLER RESERVE. The property is zoned R-PZD, RESIDENTIAL PLANNED ZONING DISTRICT SOUTHPASS and contains approximately 630 acres. The request is to rezone the property to P-1, INSTITUTIONAL.

Does this item have a cost?

Cost of this request	Category or Project Budget	Program or Project Name
Account Number	Funds Used to Date	Program or Project Category
Project Number	$0.00 Remaining Balance	Fund Name

Budgeted Item? **Budget Adjustment Attached?**

V20130812

ENTERED 6/19/14

Previous Ordinance or Resolution #

Original Contract Number:

ENTERED 6/23/14 BRP

Comments:

06-18-2014

6-23-14

6/23/14

6/23/14

CITY OF Fayetteville ARKANSAS

CITY COUNCIL AGENDA MEMO

MEETING OF JULY 15, 2014

TO: Fayetteville City Council

THRU: Andrew Garner, Planning Director

FROM: Jesse Fulcher, Senior Planner

DATE: June 9, 2014

SUBJECT: **RZN 14-4731: Rezone (REGIONAL PARK/MT. KESSLER RESERVE, 673):** Submitted by CITY STAFF for property located at REGIONAL PARK/MT. KESSLER RESERVE. The property is zoned R-PZD, RESIDENTIAL PLANNED ZONING DISTRICT SOUTHPASS and contains approximately 630 acres. The request is to rezone the property to P-1, INSTITUTIONAL.

RECOMMENDATION:
The Planning Commission and City Planning staff recommend approval of an ordinance to rezone the property to P-1, Institutional.

BACKGROUND:
The subject property is located along Cato Springs Road (south Razorback Road) just west of I-49/540 and the Fulbright Expressway. The property is a part of the SouthPass Planned Zoning District that was approved in 2008 on approximately 900 acres. The SouthPass development is still an approved project, but ownership of the property has since gone back to Chambers Bank.

The 630 acres owned by the City of Fayetteville includes the regional park property deeded to the City as part of the Planned Zoning District approval, a 56-acre landfill that is currently being remediated by ADEQ, the 328-acre Mt. Kessler property purchased by the City with a 50/50 matching grant, a 10-acre site containing municipal water towers, and a 48-acre parcel deeded by Chambers Bank to be used as a parkland credit for future development.

CITY PLAN 2030 FUTURE LAND USE PLAN: City Plan 2030 Future Land Use Map designates this property as a Natural Area, Residential Neighborhood Area, City Neighborhood Area and Civic and Private Open Space Parks.

COMPATIBILITY: The 630-acre parcel is owned by the City of Fayetteville and is intended/required to be used as a community park and preserve. Rezoning the property to Institutional is consistent with the land use plans for this property and consistent with the adopted land use plan. The Institutional zoning district is the district applied to all City parks and natural areas.

DISCUSSION:
On June 9, 2014 the Planning Commission forwarded this item to the City Council with a recommendation for approval with a vote of 6-0-0.

BUDGET/STAFF IMPACT:
N/A

Attachments:
CC Ordinance
Exhibit A
Exhibit B
Planning Commission Staff Report

ORDINANCE NO.

AN ORDINANCE REZONING THAT PROPERTY DESCRIBED IN REZONING PETITION RZN 14-4731, FOR APPROXIMATELY 630 ACRES, LOCATED AT MT. KESSLER REGIONAL PARK FROM R-PZD, RESIDENTIAL PLANNED ZONING DISTRICT SOUTHPASS 08-2898, TO P-1, INSTITUTIONAL.

BE IT ORDAINED BY THE CITY COUNCIL OF THE CITY OF FAYETTEVILLE, ARKANSAS:

Section 1: That the City Council of the City of Fayetteville, Arkansas hereby changes the zone classification of the following described property from R-PZD, Residential Planned Zoning District Southpass 08-2898 to P-1, Institutional as shown on Exhibits "A" and "B" attached hereto and made a part hereof.

Section 2: That the City Council of the City of Fayetteville, Arkansas hereby amends the official zoning map of the City of Fayetteville to reflect the zoning change provided in Section 1.

PASSED and **APPROVED** this day of , 2014.

APPROVED: ATTEST:

By: _____ By: _____

LIONELD JORDAN, Mayor **SONDRA E. SMITH**, City Clerk/Treasurer

EXHIBIT 'A'
14-4731

RZN14-4731

Close Up View

KESSLER RESERVE

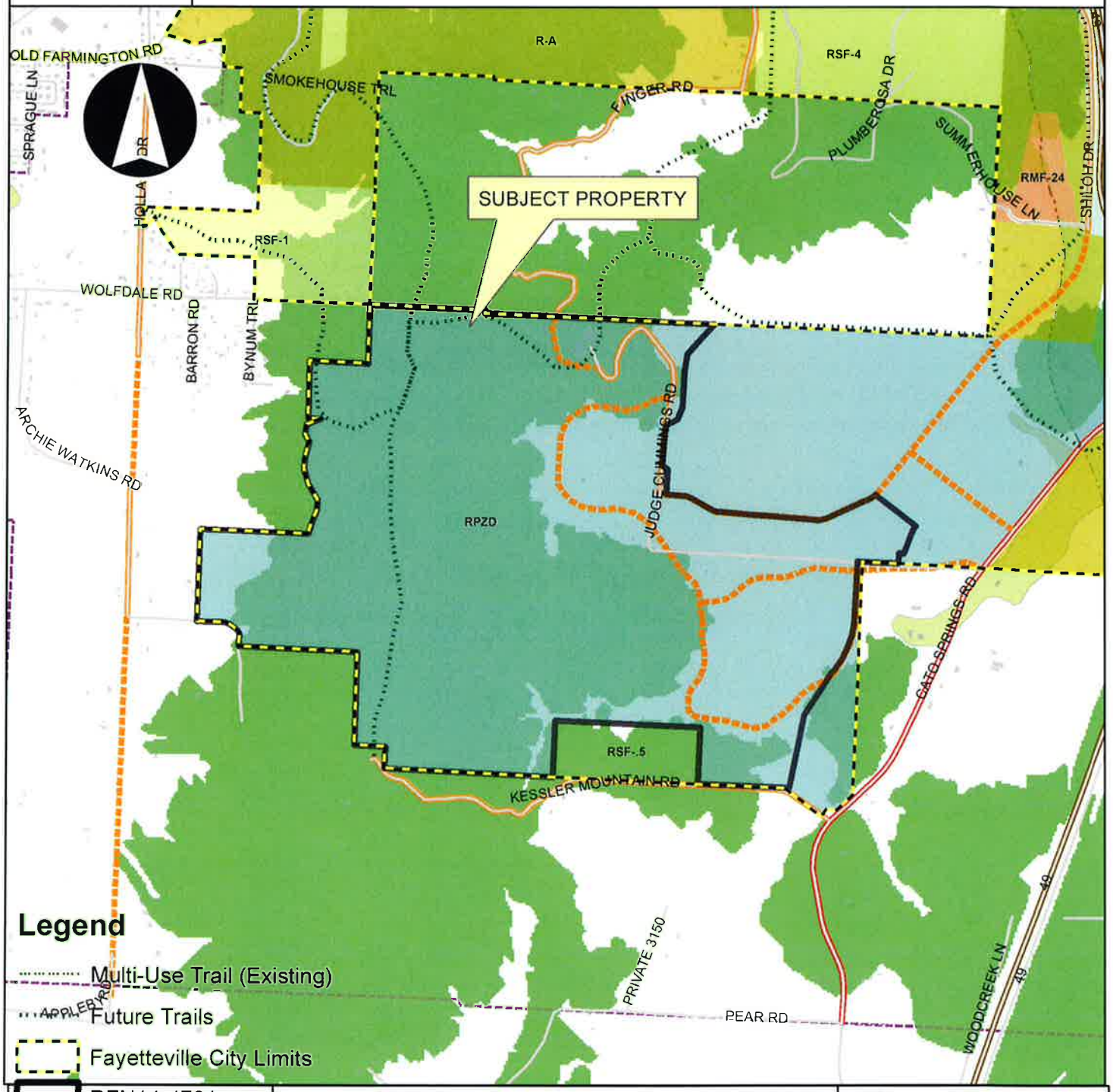

EXHIBIT 'B'
14-4731

Landfill Tract

DESCRIPTION:
A PART OF THE FRACTIONAL SOUTHWEST QUARTER (SW ¼) OF SECTION THIRTY (30); ALSO A PART OF THE NORTH HALF (N ½) OF THE NORTHWEST QUARTER (NW ¼) OF SECTION THIRTY-ONE (31); ALL BEING IN TOWNSHIP SIXTEEN (16) NORTH, RANGE THIRTY (30) WEST, WASHINGTON COUNTY, ARKANSAS, BEING MORE PARTICULARLY DESCRIBED AS FOLLOWS:

COMMENCING AT THE NORTHWEST CORNER OF SAID FRACTIONAL NORTH HALF (N ½) OF THE NORTHWEST QUARTER (NW ¼) OF SECTION THIRTY-ONE (31); THENCE ALONG THE NORTHERLY LINE OF SAID SECTION SOUTH 87°36′00″ EAST 631.78 FEET TO THE POINT OF BEGINNING; THENCE THE FOLLOWING COURSES:
NORTH 03°45'03" WEST 193.85 FEET; NORTH 33°10'45" EAST 93.12 FEET;
NORTH 12°14'10" WEST 61.68 FEET; NORTH 59°18'19" WEST 167.23 FEET;
NORTH 13°29'43" EAST 249.53 FEET; NORTH 51°54'24" EAST 142.14 FEET;
NORTH 30°22'45" EAST 35.11 FEET; NORTH 04°29'50" WEST 94.14 FEET;
NORTH 09°09'33" EAST 160.69 FEET; NORTH 36°40'58" EAST 132.87 FEET;
NORTH 73°04'21" EAST 80.35 FEET; NORTH 25°18'23" EAST 179.24 FEET;
NORTH 07°01'42" WEST 40.41 FEET; NORTH 80°47'20" WEST 163.12 FEET;
NORTH 03°46'38" EAST 198.74 FEET; NORTH 69°00'04" EAST 151.67 FEET;
NORTH 18°26'54" EAST 128.25 FEET; NORTH 45°34'43" EAST 191.40 FEET;
NORTH 78°45'57" EAST 173.51 FEET; SOUTH 61°48'52" EAST 181.49 FEET;
SOUTH 36°42'18" EAST 131.10 FEET; SOUTH 66°13'53" EAST 88.19 FEET;
SOUTH 84°30'33" EAST 125.56 FEET; SOUTH 68°47'27" EAST 82.18 FEET;
NORTH 85°14'45" EAST 156.40 FEET; SOUTH 31°09'22" EAST 243.34 FEET;
SOUTH 11°12'21" WEST 186.57 FEET; SOUTH 43°07'14" EAST 75.11 FEET;
SOUTH 04°57'24" WEST 189.85 FEET; SOUTH 59°37'54" WEST 51.10 FEET;
SOUTH 52°54'08" EAST 200.49 FEET; SOUTH 03°35'25" WEST 509.64 FEET;
SOUTH 74°31'17" WEST 211.67 FEET; NORTH 89°22'34" WEST 353.04 FEET;
SOUTH 09°22'34" EAST 184.47 FEET; SOUTH 88°40'04" EAST 37.79 FEET;
SOUTH 44°57'00" EAST 226.52 FEET; SOUTH 02°36'46" WEST 144.08 FEET;
NORTH 87°23'14" WEST 1005.32 FEET; NORTH 04°18'51" EAST 163.80 FEET;
SOUTH 58°27'31" WEST 245.19 FEET; NORTH 03°45′03″ WEST 74.39 FEET TO THE POINT OF BEGINNING, CONTAINING 56.510 ACRES, MORE OR LESS.

LESS AND EXCEPT:
THOSE PORTIONS OF WASHINGTON COUNTY ROAD NO. 200 (JUDGE CUMMINGS ROAD) AFFECTED BY A CITY OF FAYETTEVILLE ANNEXATION PER ORDINANCE NO. 5190 RECORDED WITH THE CITY CLERK HAVING A FIFTY (50) FOOT RIGHT-OF-WAY EXTENDING TWENTY-FIVE (25) FEET EACH SIDE OF A CENTERLINE, SAID ROAD PORTION BEING IN PART OF THE NORTHWEST QUARTER (NW ¼) OF THE NORTHEAST QUARTER (NE ¼) AND PART OF THE NORTHEAST QUARTER (NE ¼) OF THE NORTHWEST QUARTER (NW ¼) OF SECTION THIRTY-ONE (31), AND PART OF THE FRACTIONAL SOUTH HALF (S ½) OF THE SOUTH HALF (S ½) OF SECTION THIRTY (30), ALL IN TOWNSHIP SIXTEEN (16) NORTH, RANGE THIRTY (30)

WEST, WASHINGTON COUNTY, ARKANSAS, SAID CENTERLINE OF SAID ROAD BEING MORE PARTICULARLY DESCRIBED AS FOLLOWS:

COMMENCING AT THE SOUTHEAST CORNER OF THE SOUTHEAST QUARTER (SE ¼), SAID SECTION THIRTY (30); THENCE ALONG THE SOUTH LINE OF SAID SECTION NORTH 87°14′32″ WEST 8.86 FEET TO THE WESTERLY RIGHT-OF-WAY LINE OF STATE HIGHWAY NO. 265 SOUTH (CATO SPRINGS ROAD) AS PER ARKANSAS STATE HIGHWAY COMMISSION JOB NO. 9497; THENCE ALONG SAID WESTERLY RIGHT-OF-WAY LINE SOUTH 37°59′03″ WEST 9.81 FEET TO ITS INTERSECTION WITH THE CENTERLINE OF A GRAVEL ROAD KNOWN AS SAID WASHINGTON COUNTY 200 (JUDGE CUMMINGS ROAD), SAID INTERSECTION BEING THE POINT OF BEGINNING; THENCE ALONG SAID CENTERLINE THE FOLLOWING COURSES: NORTH 88°17′56″ WEST 957.47 FEET; NORTH 87°05′11″ WEST 323.63 FEET; SOUTH 82°07′28″ WEST 44.99 FEET; NORTH 52°16′47″ WEST 44.69 FEET; NORTH 85°51′11″ WEST 262.89 FEET; NORTH 86°24′16″ WEST 1240.07 FEET; SOUTH 84°41′18″ WEST 125.64 FEET; NORTH 83°12′13″ WEST 228.12 FEET; NORTH 86°28′14″ WEST 616.08 FEET; NORTH 82°23′29″ WEST 108.38 FEET TO THE BEGINNING OF A CURVE TO THE RIGHT HAVING A CENTRAL ANGLE OF 67°34′09″ AND A RADIUS OF 208.61 FEET; THENCE ALONG SAID CURVE AN ARC LENGTH OF 246.01 FEET AND A CHORD BEARING AND DISTANCE OF NORTH 48°36′25″ WEST 232.00 FEET; THENCE NORTH 17°05′30″ WEST 66.98 FEET TO THE BEGINNING OF A CURVE TO THE LEFT HAVING A CENTRAL ANGLE OF 40°52′22″ AND A RADIUS OF 213.20 FEET; THENCE ALONG SAID CURVE AN ARC LENGTH OF 152.09 FEET AND A CHORD BEARING AND DISTANCE OF NORTH 37°31′41″ WEST 148.88 FEET TO THE EASTERLY BOUNDARY OF A PROPERTY DESCRIBED IN INSTRUMENT NUMBER 2005-48123 RECORDED WITH THE CIRCUIT CLERK OF SAID COUNTY, SAID EASTERLY BOUNDARY ALSO BEING THE TERMINUS OF SAID CENTERLINE; THE SIDE LINES OF SAID ROAD TO BE SHORTENED OR LENGTHENED AT SAID TERMINUS BOUNDARY.

SUBJECT TO A THIRTY FOOT (30′) ACCESS EASEMENT AS DECRIBED IN BK. 1439, PG. 647 AND INSTRUMENT NO. 92-046191 BOTH BEING RECORDED WITH THE CIRCUIT CLERK, WASHINGTON COUNTY, ARKANSAS.

SUBJECT TO ANY OTHER RIGHTS-OF-WAY AND/OR EASEMENTS WHETHER OR NOT OF RECORD.

TRACT #5

DESCRIPTION:
A PART OF THE FRACTIONAL WEST HALF (W ½) OF THE SOUTHWEST QUARTER (SW ¼) AND A PART OF THE SOUTHEAST QUARTER (SE ¼) OF THE SOUTHWEST QUARTER (SW ¼), ALL BEING IN SECTION THIRTY (30); AND A PART OF THE FRACTIONAL NORTHWEST QUARTER (NW ¼) OF SECTION THIRTY-ONE (31); AND A PART OF THE SOUTHEAST QUARTER (SE ¼) OF SECTION TWENTY-FIVE (25); AND A PART OF THE NORTH HALF (N ½) OF THE NORTHEAST QUARTER (NE ¼) AND A PART OF THE SOUTHEAST QUARTER (SE ¼) OF THE NORTHEAST QUARTER (NE ¼), ALL BEING IN SECTION THIRTY-SIX (36); ALL PARTS BEING IN TOWNSHIP SIXTEEN (16) NORTH, RANGE THIRTY-ONE (31) WEST, WASHINGTON COUNTY, ARKANSAS, BEING MORE PARTICULARLY DESCRIBED AS FOLLOWS:

BEGINNING AT A FOUND ALUMINUM MONUMENT AT THE NORTHEAST CORNER OF SAID SOUTHEAST QUARTER (SE ¼), SECTION TWENTY-FIVE (25), TOWNSHIP SIXTEEN (16) NORTH, RANGE THIRTY-ONE (31) WEST; THENCE ALONG THE EASTERLY LINE OF SAID TRACT SOUTH 02°25'51" WEST 36.60 FEET TO A FOUND ALUMINUM MONUMENT AT THE NORTHWEST CORNER OF THE FRACTIONAL SOUTHWEST QUARTER (SW ¼) OF SECTION THIRTY (30), TOWNSHIP SIXTEEN (16) NORTH, RANGE THIRTY (30) WEST; THENCE ALONG THE

NORTH LINE OF SAID TRACT SOUTH 87°15'10" EAST 700.17 FEET; THENCE LEAVING SAID NORTH LINE SOUTH 02°05'17" WEST 660.00 FEET; THENCE THE FOLLOWING COURSES: SOUTH 87°15'10" EAST 257.44 FEET; SOUTH 58°07'31" WEST 324.29 FEET; NORTH 86°44'15" WEST 330.61 FEET; SOUTH 74°09'23" WEST 137.05 FEET; SOUTH 30°16'13" WEST 254.00 FEET; SOUTH 27°26'52" WEST 126.27 FEET; SOUTH 04°45'59" WEST 193.96 FEET; SOUTH 25°07'29" EAST 274.91 FEET; SOUTH 46°49'29" EAST 159.23 FEET; SOUTH 03°33'11" WEST 69.09 FEET; SOUTH 28°33'12" WEST 86.25 FEET; SOUTH 02°12'58" EAST 248.61 FEET; SOUTH 05°50'07" EAST 152.03 FEET; SOUTH 29°43'41" WEST 92.26 FEET; SOUTH 37°07'18" EAST 120.86 FEET; SOUTH 45°00'58" EAST 126.58 FEET; SOUTH 17°48'52" WEST 178.11 FEET; SOUTH 04°52'49" EAST 113.12 FEET; NORTH 82°59'00" EAST 136.94 FEET; SOUTH 09°29'53" EAST 155.53 FEET; NORTH 52°21'44" EAST 384.50 FEET; SOUTH 04°18′51″ WEST 13.13 FEET; SOUTH 87°23'14" EAST 1005.32 FEET; NORTH 02°36′46″ EAST 144.08 FEET; NORTH 44°57'00" WEST 226.52 FEET; NORTH 88°40'04" WEST 37.79 FEET; NORTH 09°22'34" WEST 184.47 FEET; SOUTH 89°22′34″ EAST 237.27 FEET TO THE BEGINNING OF A CURVE TO THE RIGHT HAVING A CENTRAL ANGLE OF 16°11′23″ AND A RADIUS OF 453.50; THENCE ALONG SAID CURVE AN ARC LENGTH OF 128.14 FEET AND A CHORD BEARING AND DISTANCE OF SOUTH 49°42'24" EAST 127.72 FEET; THENCE SOUTH 41°36'42" EAST 109.30 FEET TO THE BEGINNING OF A CURVE TO THE RIGHT HAVING A CENTRAL ANGLE OF 08°20′11″ AND A RADIUS OF 453.50 FEET; THENCE ALONG SAID CURVE AN ARC LENGTH OF 65.98 FEET AND A CHORD BEARING AND DISTANCE OF SOUTH 37°26'37" EAST 65.92 FEET; THENCE THE FOLLOWING COURSES: SOUTH 33°16'32" EAST 59.20 FEET; SOUTH 56°43'28" WEST 129.29 FEET; SOUTH 00°00'00" EAST 167.54 FEET; NORTH 90°00'00" EAST 176.03 FEET; NORTH 56°33'49" EAST 100.55 FEET; THENCE SOUTH 33°16'32" EAST 120.80 FEET TO THE BEGINNING OF A CURVE TO THE LEFT HAVING A CENTRAL ANGLE OF 16°38′06″ AND A RADIUS OF 360.00 FEET; THENCE ALONG SAID CURVE AN ARC LENGTH OF 104.52 FEET AND A CHORD BEARING AND DISTANCE OF SOUTH 41°35'35" EAST 104.15 FEET; THENCE SOUTH 49°54'38" EAST 54.78 FEET TO THE BEGINNING OF A CURVE TO THE RIGHT HAVING A CENTRAL ANGLE OF 48°18′27″ AND A RADIUS OF 360.00 FEET; THENCE ALONG SAID CURVE AN ARC LENGTH OF 303.53 FEET AND A CHORD BEARING AND DISTANCE OF SOUTH 25°45'24" EAST 294.61 FEET; THENCE SOUTH 01°36'10" EAST 48.91 FEET TO THE BEGINNING OF A CURVE TO THE LEFT HAVING A CENTRAL ANGLE OF 17°44′21″ AND A RADIUS OF 220.00 FEET; THENCE ALONG SAID CURVE AN ARC LENGTH OF 68.11 FEET AND A CHORD BEARING AND DISTANCE OF SOUTH 10°28'21" EAST 67.84 FEET; THENCE SOUTH 19°20'31" EAST 37.23 FEET TO THE BEGINNING OF A CURVE TO THE RIGHT HAVING A CENTRAL ANGLE OF 24°59′05″ AND A RADIUS OF 220.00 FEET; THENCE ALONG SAID CURVE AN ARC LENGTH OF 95.93 FEET AND A CHORD BEARING AND DISTANCE OF SOUTH 06°50'59" EAST 95.18 FEET; THENCE SOUTH 05°38'34" WEST 122.87 FEET TO THE BEGINNING OF A CURVE TO THE LEFT HAVING A CENTRAL ANGLE OF 16°45′37″ AND A RADIUS OF 560.00 FEET; THENCE ALONG SAID CURVE AN ARC LENGTH OF 163.81 FEET AND A CHORD BEARING AND DISTANCE OF SOUTH 02°44'14" EAST 163.23 FEET; THENCE SOUTH 11°07'03" EAST 17.62 FEET TO THE BEGINNING OF A CURVE TO THE RIGHT HAVING A CENTRAL ANGLE OF 46°37′08″ AND A RADIUS OF 560.00 FEET; THENCE ALONG SAID CURVE AN ARC LENGTH OF 455.65 FEET AND A CHORD BEARING AND DISTANCE OF SOUTH 12°11'31" WEST 443.18 FEET; THENCE SOUTH 35°30'05" WEST 58.56 FEET TO THE BEGINNING OF A CURVE TO THE LEFT HAVING A CENTRAL ANGLE OF 45°41′49″ AND A RADIUS OF 280.00 FEET; THENCE ALONG SAID CURVE AN ARC LENGTH OF 223.32 FEET AND A CHORD BEARING AND DISTANCE OF SOUTH 12°39'11" WEST 217.45 FEET; THENCE SOUTH 10°11'44" EAST 1.43 FEET TO THE BEGINNING OF A CURVE TO THE LEFT HAVING A CENTRAL ANGLE OF 71°40′01″ AND A RADIUS OF 120.00 FEET; THENCE ALONG SAID CURVE AN ARC LENGTH OF 150.10 FEET AND A CHORD BEARING AND DISTANCE OF SOUTH 46°01′45" EAST 140.50 FEET; THENCE SOUTH 81°51'46" EAST 60.59 FEET TO A FOUND IRON PIN; THENCE SOUTH 02°36′50″ WEST 111.94 FEET TO A FOUND IRON PIN; THENCE NORTH 87°10'03" WEST 1671.80 FEET TO A FOUND IRON PIN; THENCE SOUTH 02°37'31" WEST 651.66 FEET TO THE SOUTHERLY LINE OF SAID NORTH HALF (N ½) OF THE FRACTIONAL SECTION THIRTY-ONE (31); THENCE ALONG SAID SOUTHERLY LINE NORTH

87°04'57" WEST 963.78 FEET TO A FOUND ALUMINUM MONUMENT BEING THE SOUTHWEST CORNER OF SAID FRACTIONAL NORTHWEST QUARTER (NW ¼), SECTION THIRTY-ONE (31), TOWNSHIP SIXTEEN (16) NORTH, RANGE THIRTY (30) WEST; THENCE ALONG THE SOUTHERLY LINE OF SAID SOUTHEAST QUARTER (SE ¼) OF THE NORTHEAST QUARTER (NE ¼) OF SECTION THIRTY-SIX (36), TOWNSHIP SIXTEEN (16) NORTH, RANGE THIRTY-ONE (31) WEST NORTH 87°03'18" WEST 962.79 FEET TO A FOUND IRON PIN; THENCE LEAVING SAID SOUTHERLY LINE NORTH 03°06'30" EAST 249.93 FEET TO A FOUND IRON PIN; THENCE NORTH 86°53'02" WEST 350.00 FEET TO A FOUND IRON PIN ON THE WESTERLY LINE OF SAID SOUTHEAST QUARTER (SE ¼) OF THE NORTHEAST QUARTER (NE ¼), SECTION THIRTY-SIX (36), TOWNSHIP SIXTEEN (16), RANGE THIRTY-ONE (31) WEST; THENCE ALONG SAID WESTERLY LINE NORTH 01°47'26" EAST 1060.68 FEET TO A FOUND IRON PIN AT THE SOUTHEAST CORNER OF THE NORTHWEST QUARTER (NW ¼) OF THE NORTHEAST QUARTER (NE ¼) SAID SECTION THIRTY-SIX (36), TOWNSHIP SIXTEEN (16) NORTH, RANGE THIRTY-ONE (31) WEST; THENCE ALONG THE SOUTHERLY LINE OF SAID FORTY (40) ACRE TRACT NORTH 87°16'27" WEST 163.05 FEET; THENCE LEAVING SAID SOUTHERLY LINE NORTH 01°57'34" EAST 1324.69 FEET TO THE SOUTHERLY LINE OF THE SOUTHWEST QUARTER (SW ¼) OF THE SOUTHEAST QUARTER (SE ¼), SAID SECTION TWENTY-FIVE (25), TOWNSHIP SIXTEEN (16) NORTH, RANGE THIRTY-ONE (31) WEST; THENCE ALONG SAID SOUTHERLY LINE OF SAID TRACT NORTH 87°31'37" WEST 436.24 FEET TO A FOUND IRON PIN ON A BLUFF LINE; THENCE ALONG SAID BLUFF LINE THE FOLLOWING COURSES:
NORTH 17°08'05" EAST 157.76 FEET; NORTH 23°29'30" EAST 127.51 FEET; NORTH 02°25'44" EAST 131.20 FEET; N 30°29'11" WEST 198.42 FEET; NORTH 16°15'45" WEST 180.52 FEET; NORTH 03°00'58" EAST 113.62 FEET; NORTH 14°13'54" EAST 202.18 FEET; NORTH 24°51'02" WEST 100.73 FEET; NORTH 08°41'17" EAST 110.59 FEET; NORTH 67°53'42" EAST 173.71 FEET TO A FOUND IRON PIN; THENCE LEAVING SAID BLUFF LINE NORTH 87°18'22" WEST 147.50 FEET TO A FOUND IRON PIN; THENCE NORTH 01°28'04" EAST 659.86 FEET TO A FOUND IRON PIN; THENCE SOUTH 87°13'07" EAST 660.25 FEET TO A FOUND IRON PIN ON THE WESTERLY LINE OF A PROPERTY DESCRIBED AS "ADJUSTED TRACT 2" IN INSTRUMENT NO. 2010-26595 AS FILED WITH THE CIRCUIT CLERK OF SAID COUNTY; THENCE ALONG THE WESTERLY LINE OF SAID PROPERTY NORTH 01°27'39" EAST 675.06 TO A FOUND IRON PIN AT THE NORTHWEST CORNER OF THE NORTHEAST QUARTER (NE ¼) OF THE SOUTHEAST QUARTER (SE ¼), SAID SECTION TWENTY-FIVE (25), TOWNSHIP SIXTEEN (16) NORTH, RANGE THIRTY-ONE (31) WEST; THENCE ALONG SAID NORTHERLY LINE OF SAID TRACT SOUTH 87°09'38" EAST 1314.52 FEET TO THE POINT OF BEGINNING, CONTAINING 339.811 ACRES, MORE OR LESS.

LESS AND EXCEPT:
THOSE PORTIONS OF WASHINGTON COUNTY ROAD NO. 200 (JUDGE CUMMINGS ROAD) AFFECTED BY A CITY OF FAYETTEVILLE ANNEXATION PER ORDINANCE NO. 5190 RECORDED WITH THE CITY CLERK HAVING A FIFTY (50) FOOT RIGHT-OF-WAY EXTENDING TWENTY-FIVE (25) FEET EACH SIDE OF A CENTERLINE, SAID ROAD PORTION BEING IN PART OF THE NORTHWEST QUARTER (NW ¼) OF THE NORTHEAST QUARTER (NE ¼) AND PART OF THE NORTHEAST QUARTER (NE ¼) OF THE NORTHWEST QUARTER (NW ¼) OF SECTION THIRTY-ONE (31), AND PART OF THE FRACTIONAL SOUTH HALF (S ½) OF THE SOUTH HALF (S ½) OF SECTION THIRTY (30), ALL IN TOWNSHIP SIXTEEN (16) NORTH, RANGE THIRTY (30) WEST, WASHINGTON COUNTY, ARKANSAS, SAID CENTERLINE OF SAID ROAD BEING MORE PARTICULARLY DESCRIBED AS FOLLOWS:

COMMENCING AT THE SOUTHEAST CORNER OF THE SOUTHEAST QUARTER (SE ¼), SAID SECTION THIRTY (30); THENCE ALONG THE SOUTH LINE OF SAID SECTION NORTH 87°14'32" WEST 8.86 FEET TO THE WESTERLY RIGHT-OF-WAY LINE OF STATE HIGHWAY NO. 265 SOUTH (CATO SPRINGS ROAD) AS PER ARKANSAS STATE HIGHWAY COMMISSION JOB NO. 9497; THENCE ALONG SAID WESTERLY RIGHT-OF-WAY LINE SOUTH 37°59'03" WEST 9.81 FEET TO ITS INTERSECTION WITH THE CENTERLINE OF A GRAVEL ROAD KNOWN

AS SAID WASHINGTON COUNTY 200 (JUDGE CUMMINGS ROAD), SAID INTERSECTION BEING THE POINT OF BEGINNING; THENCE ALONG SAID CENTERLINE THE FOLLOWING COURSES: NORTH 88°17′56″ WEST 957.47 FEET; NORTH 87°05′11″ WEST 323.63 FEET; SOUTH 82°07′28″ WEST 44.99 FEET; NORTH 52°16′47″ WEST 44.69 FEET; NORTH 85°51′11″ WEST 262.89 FEET; NORTH 86°24′16″ WEST 1240.07 FEET; SOUTH 84°41′18″ WEST 125.64 FEET; NORTH 83°12′13″ WEST 228.12 FEET; NORTH 86°28′14″ WEST 616.08 FEET; NORTH 82°23′29″ WEST 108.38 FEET TO THE BEGINNING OF A CURVE TO THE RIGHT HAVING A CENTRAL ANGLE OF 67°34′09″ AND A RADIUS OF 208.61 FEET; THENCE ALONG SAID CURVE AN ARC LENGTH OF 246.01 FEET AND A CHORD BEARING AND DISTANCE OF NORTH 48°36′25″ WEST 232.00 FEET; THENCE NORTH 17°05′30″ WEST 66.98 FEET TO THE BEGINNING OF A CURVE TO THE LEFT HAVING A CENTRAL ANGLE OF 40°52′22″ AND A RADIUS OF 213.20 FEET; THENCE ALONG SAID CURVE AN ARC LENGTH OF 152.09 FEET AND A CHORD BEARING AND DISTANCE OF NORTH 37°31′41″ WEST 148.88 FEET TO THE EASTERLY BOUNDARY OF A PROPERTY DESCRIBED IN INSTRUMENT NUMBER 2005-48123 RECORDED WITH THE CIRCUIT CLERK OF SAID COUNTY, SAID EASTERLY BOUNDARY ALSO BEING THE TERMINUS OF SAID CENTERLINE; THE SIDE LINES OF SAID ROAD TO BE SHORTENED OR LENGTHENED AT SAID TERMINUS BOUNDARY.

SUBJECT TO A THIRTY FOOT (30′) ACCESS EASEMENT AS DECRIBED IN BK. 1439, PG. 647 AND INSTRUMENT NO. 92-046191 BOTH BEING RECORDED WITH THE CIRCUIT CLERK, WASHINGTON COUNTY, ARKANSAS.

SUBJECT TO ANY OTHER RIGHTS-OF-WAY AND/OR EASEMENTS WHETHER OR NOT OF RECORD.

TRACT #2A

DESCRIPTION:
A PART OF THE SOUTH HALF (S ½) OF THE SOUTHEAST QUARTER (SE ¼) AND A PART OF THE SOUTHEAST QUARTER (SE ¼) OF THE SOUTHWEST QUARTER (SW ¼), ALL BEING IN SECTION THIRTY (30), TOWNSHIP SIXTEEN (16) NORTH, RANGE THIRTY (30) WEST; AND A PART OF THE WEST HALF (W ½) OF THE NORTHEAST QUARTER (NE ¼) AND A PART OF THE EAST HALF (E ½) OF THE NORTHWEST QUARTER (NW ¼), ALL BEING IN SECTION THIRTY-ONE (31), TOWNSHIP SIXTEEN (16) NORTH, RANGE THIRTY (30) WEST; ALL BEING IN WASHINGTON COUNTY, ARKANSAS, BEING MORE PARTICULARLY DESCRIBED AS FOLLOWS:

BEGINNING AT A FOUND ALUMINUM MONUMENT BEING THE NORTHEAST CORNER OF SAID WEST HALF (W ½) OF THE NORTHEAST QUARTER (NE ¼) IN SECTION THIRTY-ONE 31; THENCE ALONG THE NORTHERLY LINE OF SAID TRACT NORTH 87°14'32" WEST 61.42 FEET; THENCE LEAVING SAID NORTHERLY LINE SOUTH 03°21′43′ WEST 676.13 FEET TO THE BEGINNING OF A CURVE TO THE RIGHT HAVING A DELTA ANGLE OF 18°58′29″ AND A RADIUS OF 800.00 FEET; THENCE ALONG SAID CURVE AN ARC LENGTH OF 264.94 FEET AND A CHORD BEARING AND DISTANCE OF SOUTH 12°50′58″ WEST 263.73 FEET; THENCE SOUTH 22°20′12″ WEST 97.52 FEET TO THE BEGINNING OF A CURVE TO THE RIGHT HAVING A DELTA ANGLE OF 22°10′26″ AND A RADIUS OF 800.00 FEET; THENCE ALONG SAID CURVE AN ARC LENGTH OF 309.60 FEET AND A CHORD BEARING AND DISTANCE OF SOUTH 33°25′25″ WEST 307.68 FEET; THENCE SOUTH 33°27′47″ WEST 568.11 FEET; THENCE SOUTH 11°38′12″ WEST 854.59 FEET TO THE SOUTHERLY LINE OF SAID WEST HALF (W ½) OF THE NORTHEAST QUARTER (NE ¼) IN SECTION THIRTY-ONE (31); THENCE ALONG SAID SOUTHERLY LINE OF SAID TRACT NORTH 87°21′46′ WEST 611.22 FEET TO A FOUND IRON PIN BEING THE SOUTHEAST CORNER OF SAID EAST HALF (E ½) OF THE NORTHWEST QUARTER (NW ¼) IN SECTION THIRTY-ONE (31); THENCE ALONG THE

SOUTHERLY LINE OF SAID TRACT NORTH 87°04′57″ WEST 423.66 FEET TO FOUND IRON PIPE; THENCE LEAVING SAID SOUTHERLY LINE NORTH 02°36′50″ EAST 766.09 FEET; THENCE NORTH 81°51'46" WEST 60.59 FEET TO THE BEGINNING OF A CURVE TO THE RIGHT HAVING A DELTA ANGLE OF 71°40'01" AND A RADIUS OF 120.00 FEET; THENCE ALONG SAID CURVE AN ARC LENGTH OF 150.10 FEET AND A CHORD BEARING AND DISTANCE OF NORTH 46°01'45" WEST 140.50 FEET; THENCE NORTH 10°11'44" WEST 1.43 FEET TO THE BEGINNING OF A CURVE TO THE RIGHT HAVING A DELTA ANGLE OF 45°41'49" AND A RADIUS OF 280.00 FEET; THENCE ALONG SAID CURVE AN ARC LENGTH OF 223.32 FEET AND A CHORD BEARING AND DISTANCE OF NORTH 12°39'11" EAST 217.45 FEET; THENCE NORTH 35°30'05" EAST 58.56 FEET TO THE BEGINNING OF A CURVE TO THE LEFT HAVING A DELTA ANGLE OF 46°37'08" AND A RADIUS OF 560.00 FEET; THENCE ALONG SAID CURVE AN ARC LENGTH OF 455.65 FEET AND A CHORD BEARING AND DISTANCE OF NORTH 12°11'31" EAST 443.18 FEET; THENCE NORTH 11°07'03" WEST 17.62 FEET TO THE BEGINNING OF A CURVE TO THE RIGHT HAVING A DELTA ANGLE OF 16°45'37" AND A RADIUS OF 560.00 FEET; THENCE ALONG SAID CURVE AN ARC LENGTH OF 163.81 AND A CHORD BEARING AND DISTANCE OF NORTH 02°44'14" WEST 163.23 FEET; THENCE NORTH 05°38'34" EAST 122.87 FEET TO THE BEGINNING OF A CURVE TO THE LEFT HAVING A DELTA ANGLE OF 24°59'05" AND A RADIUS OF 220.00 FEET; THENCE ALONG SAID CURVE AN ARC LENGTH OF 95.93 FEET AND A CHORD BEARING AND DISTANCE OF NORTH 06°50'59" WEST 95.18 FEET; THENCE NORTH 19°20'31" WEST 37.23 FEET TO THE BEGINNING OF A CURVE TO THE RIGHT HAVING A DELTA ANGLE OF 17°44'21" AND A RADIUS OF 220.00 FEET; THENCE ALONG SAID CURVE AN ARC LENGTH OF 68.11 FEET AND A CHORD BEARING AND DISTANCE OF NORTH 10°28'21" WEST 67.84 FEET; THENCE NORTH 01°36'10" WEST 48.91 FEET TO THE BEGINNING OF A CURVE TO THE LEFT HAVING A DELTA ANGLE OF 48°18'27", AND A RADIUS OF 360.00 FEET; THENCE ALONG SAID CURVE AN ARC LENGTH OF 303.53 FEET AND A CHORD BEARING AND DISTANCE OF NORTH 25°45'24" WEST 294.61 FEET; THENCE NORTH 49°54'38" WEST 54.78 FEET TO THE BEGINNING OF A CURVE TO THE RIGHT HAVING A DELTA ANGLE OF 16°38'06" AND A RADIUS OF 360.00 FEET; THENCE ALONG SAID CURVE AN ARC LENGTH OF 104.52 FEET AND A CHORD BEARING AND DISTANCE OF NORTH 41°35'35" WEST 104.15 FEET; THENCE THE FOLLOWING COURSES:
NORTH 33°16'32" WEST 120.80 FEET; SOUTH 56°33'49" WEST 100.55 FEET; NORTH 90°00'00" WEST 176.03 FEET; NORTH 00°00'00" WEST 167.54 FEET; NORTH 56°43'28" EAST 129.29 FEET; NORTH 33°16'32" WEST 59.20 FEET TO THE BEGINNING OF A CURVE TO THE LEFT HAVING A DELTA ANGLE OF 08°20'11" AND A RADIUS OF 453.50 FEET; THENCE ALONG SAID CURVE AN ARC LENGTH OF 65.98 FEET AND A CHORD BEARING AND DISTANCE OF NORTH 37°26'37" WEST 65.92 FEET; THENCE NORTH 41°36'42" WEST 109.30 FEET TO THE BEGINNING OF A CURVE TO THE LEFT HAVING A DELTA ANGLE OF 16°11'23" AND A RADIUS OF 453.50 FEET; THENCE ALONG SAID CURVE AN ARC LENGTH OF 128.14 FEET AND A CHORD BEARING AND DISTANCE OF NORTH 49°42'24" WEST 127.72 FEET; THENCE THE FOLLOWING COURSES:
SOUTH 89°22′34″ EAST 115.78 FEET; NORTH 74°31′17″ EAST 211.67 FEET; NORTH 03°35′25′ EAST 218.78 FEET; SOUTH 84°56'38" EAST 197.11 FEET TO THE BEGINNING OF A CURVE TO THE RIGHT HAVING A DELTA ANGLE OF 04°26'16" AND A RADIUS OF 250.00 FEET; THENCE ALONG SAID CURVE AN ARC LENGTH OF 19.36 FEET AND A CHORD BEARING AND DISTANCE OF SOUTH 80°22'58" EAST 19.36 FEET TO THE BEGINNING OF A COMPOUND CURVE TO THE RIGHT HAVING A DELTA ANGLE OF 17°53'56" AND A RADIUS OF 250.00 FEET; THENCE ALONG SAID COMPOUND CURVE AN ARC LENGTH OF 78.10 FEET AND A CHORD BEARING AND DISTANCE OF SOUTH 69°12'52" EAST 77.78 FEET; THENCE SOUTH 60°23'16" EAST 265.82 FEET TO THE BEGINNING OF A CURVE TO THE LEFT HAVING A DELTA ANGLE OF 26°43'18" AND A RADIUS OF 195.85 FEET; THENCE ALONG SAID CURVE AN ARC LENGTH OF 91.34 FEET AND A CHORD BEARING AND DISTANCE OF SOUTH 74°33'39" EAST 90.51 FEET; THENCE SOUTH 84°59'26" EAST 1,095.13 FEET TO THE BEGINNING OF A CURVE TO THE LEFT HAVING A DELTA ANGLE OF 29°28'57" AND A RADIUS OF 250.14 FEET; THENCE ALONG SAID CURVE AN ARC LENGTH OF 128.72 AND A CHORD BEARING AND DISTANCE OF NORTH 80°45'28" EAST 127.30 FEET; THENCE NORTH 66°00'45" EAST 470.23 FEET TO THE BEGINNING OF A CURVE TO THE LEFT HAVING A

DELTA ANGLE OF 05°46'15" AND A RADIUS OF 923.88 FEET; THENCE ALONG SAID CURVE AN ARC LENGTH OF 93.05 FEET, AND A CHORD BEARING AND DISTANCE OF NORTH 64°34'44" EAST 93.01 FEET TO THE BEGINNING OF A COMPOUND CURVE TO THE LEFT HAVING A DELTA ANGLE OF 12°00'08" AND A RADIUS OF 301.46 FEET; THENCE ALONG SAID COMPOUND CURVE AN ARC LENGTH OF 63.15 FEET AND A CHORD BEARING AND DISTANCE OF NORTH 52°42'04" EAST 63.03 FEET; THENCE THE FOLLOWING COURSES: SOUTH 51°58'39" EAST 587.96 FEET; SOUTH 38°01'21" WEST 50.50 FEET; SOUTH 21°05'39" WEST 293.94 FEET; NORTH 87°00'27" WEST 55.82 FEET; SOUTH 02°57'37" WEST 115.76 FEET TO THE SOUTHERLY LINE OF SAID SOUTH HALF (S ½) OF THE SOUTHEAST QUARTER (SE ¼) IN SECTION THIRTY (30); THENCE ALONG SAID SOUTHERLY LINE NORTH 87°14′32″ WEST 412.43 FEET TO THE POINT OF BEGINNING, CONTAINING 127.850 ACRES, MORE OR LESS.

LESS AND EXCEPT, THE FOLLOWING:
THOSE PORTIONS OF WASHINGTON COUNTY ROAD NO. 201 (KESSLER MOUNTAIN ROAD) AFFECTED BY A CITY OF FAYETTEVILLE ANNEXATION PER ORDINANCE NO. 5190 RECORDED WITH THE CITY CLERK,SAID ROAD HAVING A FIFTY (50) FOOT RIGHT-OF-WAY EXTENDING TWENTY-FIVE (25) FEET EACH SIDE OF A CENTERLINE, SAID ROAD PORTION BEING IN PART OF THE NORTHWEST QUARTER (NW ¼) OF THE SOUTHEAST QUARTER (SE ¼), AND A PART OF THE SOUTHWEST QUARTER (SW ¼) OF THE NORTHEAST QUARTER (NE ¼), AND A PART OF THE SOUTHEAST QUARTER (SE ¼) OF THE NORTHWEST QUARTER (NW ¼), ALL IN SECTION THIRTY-ONE (31), TOWNSHIP SIXTEEN (16) NORTH, RANGE THIRTY (30) WEST, WASHINGTON COUNTY, ARKANSAS, SAID CENTERLINE OF SAID ROAD BEING MORE PARTICULARLY DESCRIBED AS FOLLOWS:
COMMENCING AT THE NORTHEAST CORNER OF SAID NORTHWEST QUARTER (NW ¼) OF THE SOUTHEAST QUARTER (SE ¼) OF SAID SECTION THIRTY-ONE (31); THENCE ALONG THE NORTH LINE OF SAID FORTY (40) ACRE TRACT NORTH 86°59′53″ WEST 272.18 FEET; THENCE LEAVING SAID NORTH LINE SOUTH 03°00′07″ WEST 323.15 FEET TO THE INTERSECTION OF THE CENTERLINE OF THE EXISTING GRAVEL ROAD KNOWN AS SAID WASHINGTON COUNTY ROAD NO. 201 (KESSLER MOUNTAIN ROAD) AND THE WESTERLY RIGHT-OF-WAY LINE OF STATE HIGHWAY NO. 265 SOUTH (CATO SPRINGS ROAD) AS PER ARKANSAS STATE HIGHWAY COMMISSION JOB NO. 9497, SAID INTERSECTION BEING THE POINT OF BEGINNING; THENCE ALONG SAID CENTERLINE NORTH 55°07′55″ WEST 117.33 FEET; THENCE NORTH 55°26′23″ WEST 322.79 FEET TO THE BEGINNING OF A CURVE TO THE LEFT HAVING A CENTRAL ANGLE OF 33°59′51″ AND A RADIUS OF 506.82 FEET; THENCE ALONG SAID CURVE AN ARC LENGTH OF 300.73 FEET AND A CHORD BEARING AND DISTANCE OF NORTH 71°32′59″ WEST 296.34 FEET; THENCE NORTH 87°06′47″ WEST 311.95 FEET; THENCE NORTH 86°55′45″ WEST 1868.91 FEET TO THE TERMINUS OF SAID CENTERLINE, MORE OR LESS, AFFECTED BY SAID ANNEXATION; THE SIDE LINES OF SAID ROAD TO BE SHORTENED OR LENGTHENED AT SAID TERMINUS BOUNDARY.

LESS AND EXCEPT:
THOSE PORTIONS OF WASHINGTON COUNTY ROAD NO. 200 (JUDGE CUMMINGS ROAD) AFFECTED BY A CITY OF FAYETTEVILLE ANNEXATION PER ORDINANCE NO. 5190 RECORDED WITH THE CITY CLERK HAVING A FIFTY (50) FOOT RIGHT-OF-WAY EXTENDING TWENTY-FIVE (25) FEET EACH SIDE OF A CENTERLINE, SAID ROAD PORTION BEING IN PART OF THE NORTHWEST QUARTER (NW ¼) OF THE NORTHEAST QUARTER (NE ¼) AND PART OF THE NORTHEAST QUARTER (NE ¼) OF THE NORTHWEST QUARTER (NW ¼) OF SECTION THIRTY-ONE (31), AND PART OF THE FRACTIONAL SOUTH HALF (S ½) OF THE SOUTH HALF (S ½) OF SECTION THIRTY (30), ALL IN TOWNSHIP SIXTEEN (16) NORTH, RANGE THIRTY (30) WEST, WASHINGTON COUNTY, ARKANSAS, SAID CENTERLINE OF SAID ROAD BEING MORE PARTICULARLY DESCRIBED AS FOLLOWS:

COMMENCING AT THE SOUTHEAST CORNER OF THE SOUTHEAST QUARTER (SE ¼), SAID SECTION THIRTY (30); THENCE ALONG THE SOUTH LINE OF SAID SECTION NORTH 87°14′32″ WEST 8.86 FEET TO THE WESTERLY RIGHT-OF-WAY LINE OF STATE HIGHWAY

NO. 265 SOUTH (CATO SPRINGS ROAD) AS PER ARKANSAS STATE HIGHWAY COMMISSION JOB NO. 9497; THENCE ALONG SAID WESTERLY RIGHT-OF-WAY LINE SOUTH 37°59′03″ WEST 9.81 FEET TO ITS INTERSECTION WITH THE CENTERLINE OF A GRAVEL ROAD KNOWN AS SAID WASHINGTON COUNTY 200 (JUDGE CUMMINGS ROAD), SAID INTERSECTION BEING THE POINT OF BEGINNING; THENCE ALONG SAID CENTERLINE THE FOLLOWING COURSES: NORTH 88°17′56″ WEST 957.47 FEET; NORTH 87°05′11″ WEST 323.63 FEET; SOUTH 82°07′28″ WEST 44.99 FEET; NORTH 52°16′47″ WEST 44.69 FEET; NORTH 85°51′11″ WEST 262.89 FEET; NORTH 86°24′16″ WEST 1240.07 FEET; SOUTH 84°41′18″ WEST 125.64 FEET; NORTH 83°12′13″ WEST 228.12 FEET; NORTH 86°28′14″ WEST 616.08 FEET; NORTH 82°23′29″ WEST 108.38 FEET TO THE BEGINNING OF A CURVE TO THE RIGHT HAVING A CENTRAL ANGLE OF 67°34′09″ AND A RADIUS OF 208.61 FEET; THENCE ALONG SAID CURVE AN ARC LENGTH OF 246.01 FEET AND A CHORD BEARING AND DISTANCE OF NORTH 48°36′25″ WEST 232.00 FEET; THENCE NORTH 17°05′30″ WEST 66.98 FEET TO THE BEGINNING OF A CURVE TO THE LEFT HAVING A CENTRAL ANGLE OF 40°52′22″ AND A RADIUS OF 213.20 FEET; THENCE ALONG SAID CURVE AN ARC LENGTH OF 152.09 FEET AND A CHORD BEARING AND DISTANCE OF NORTH 37°31′41″ WEST 148.88 FEET TO THE EASTERLY BOUNDARY OF A PROPERTY DESCRIBED IN INSTRUMENT NUMBER 2005-48123 RECORDED WITH THE CIRCUIT CLERK OF SAID COUNTY, SAID EASTERLY BOUNDARY ALSO BEING THE TERMINUS OF SAID CENTERLINE; THE SIDE LINES OF SAID ROAD TO BE SHORTENED OR LENGTHENED AT SAID TERMINUS BOUNDARY.

SUBJECT TO A THIRTY FOOT (30′) ACCESS EASEMENT AS DECRIBED IN BK. 1439, PG. 647 AND INSTRUMENT NO. 92-046191 BOTH BEING RECORDED WITH THE CIRCUIT CLERK, WASHINGTON COUNTY, ARKANSAS.

SUBJECT TO ANY OTHER RIGHTS-OF-WAY AND/OR EASEMENTS WHETHER OR NOT OF RECORD.

TRACT #2B

DESCRIPTION:
A PART OF THE FRACTIONAL SOUTHWEST QUARTER (SW ¼) OF SECTION THIRTY (30); ALSO A PART OF THE FRACTIONAL NORTHWEST QUARTER (NW ¼) OF THE NORTHWEST QUARTER (NW ¼) OF SECTION THIRTY-ONE (31); ALL BEING IN TOWNSHIP SIXTEEN (16) NORTH, RANGE THIRTY (30) WEST, WASHINGTON COUNTY, ARKANSAS, BEING MORE PARTICULARLY DESCRIBED AS FOLLOWS:

BEGINNING AT A FOUND IRON PIN BEING THE NORTHWEST CORNER OF THE NORTHEAST QUARTER (NE ¼) OF THE SOUTHWEST QUARTER (SW ¼) IN SAID SECTION THIRTY (30) SAID WEST HALF (W ½) OF THE NORTHEAST QUARTER (NE ¼) IN SECTION THIRTY-ONE 31; THENCE ALONG THE NORTHERLY LINE OF SAID TRACT SOUTH 87°15'10" EAST 812.32 FEET; THENCE LEAVING SAID NORTHERLY LINE THE FOLLOWING COURSES:
SOUTH 42°00'05" WEST 459.26 FEET; SOUTH 09°10'03" WEST 205.19 FEET;
SOUTH 02°29'28" WEST 150.44 FEET; SOUTH 03°48'33" WEST 256.86 FEET;
SOUTH 21°48'47" WEST 147.86 FEET; SOUTH 62°14'23" WEST 144.10 FEET TO THE BEGINNING OF A CURVE TO THE RIGHT HAVING A DELTA ANGLE OF 05°48'45" AND A RADIUS OF 500.00 FEET; THENCE ALONG SAID CURVE AN ARC LENGTH OF 50.72 FEET AND A CHORD BEARING AND DISTANCE OF SOUTH 07°54'56" WEST 50.70 FEET; THENCE THE FOLLOWING COURSES:
SOUTH 05°00'34" WEST 407.82 FEET; NORTH 52°54'08" WEST 126.43 FEET;
NORTH 59°37'54" EAST 51.10 FEET; NORTH 04°57'24" EAST 189.85 FEET;
NORTH 43°07'14" WEST 75.11 FEET; NORTH 11°12'21" EAST 186.57 FEET;
NORTH 31°09'22" WEST 233.16 FEET; NORTH 31°09'22" WEST 10.18 FEET;

SOUTH 85°14'45" WEST 156.40 FEET; NORTH 68°47'27" WEST 82.18 FEET;
NORTH 84°30'33" WEST 125.56 FEET; NORTH 66°13'53" WEST 88.19 FEET;
NORTH 36°42'18" WEST 37.59 FEET; NORTH 36°42'18" WEST 93.51 FEET;
NORTH 61°48'52" WEST 181.49 FEET; SOUTH 78°45'57" WEST 173.51 FEET;
SOUTH 45°34'43" WEST 191.40 FEET; SOUTH 18°26'54" WEST 128.25 FEET;
SOUTH 69°00'04" WEST 151.67 FEET; SOUTH 03°46'38" WEST 198.74 FEET;
SOUTH 80°47'20" EAST 163.12 FEET; SOUTH 07°01'42" EAST 40.41 FEET;
SOUTH 25°18'23" WEST 179.24 FEET; SOUTH 73°04'21" WEST 80.35 FEET;
SOUTH 36°40'58" WEST 132.87 FEET; SOUTH 09°09'33" WEST 160.69 FEET;
SOUTH 04°29'50" EAST 94.14 FEET; SOUTH 30°22'45" WEST 35.11 FEET;
SOUTH 51°54'24" WEST 142.14 FEET; SOUTH 13°29'43" WEST 249.53 FEET;
SOUTH 59°18'19" EAST 167.23 FEET; SOUTH 12°14'10" EAST 61.68 FEET;
SOUTH 33°10'45" WEST 93.12 FEET; SOUTH 03°45'03" EAST 268.24 FEET;
NORTH 58°27'31" EAST 245.19 FEET; SOUTH 04°18'51" WEST 150.67 FEET;
SOUTH 52°21'44" WEST 384.50 FEET; NORTH 09°29'53" WEST 155.53 FEET;
SOUTH 82°59'00" WEST 136.94 FEET; NORTH 04°52'49" WEST 113.12 FEET;
NORTH 17°48'52" EAST 178.11 FEET; NORTH 45°00'58" WEST 126.58 FEET;
NORTH 37°07'18" WEST 120.86 FEET; NORTH 29°43'41" EAST 92.26 FEET;
NORTH 05°50'07" WEST 152.03 FEET; NORTH 02°12'58" WEST 248.61 FEET;
NORTH 28°33'12" EAST 86.25 FEET; NORTH 03°33'11" EAST 69.09 FEET;
NORTH 46°49'29" WEST 159.23 FEET; NORTH 25°07'29" WEST 274.91 FEET;
NORTH 04°45'59" EAST 193.96 FEET; NORTH 27°26'52" EAST 126.27 FEET;
NORTH 30°16'13" EAST 254.00 FEET; NORTH 74°09'23" EAST 137.05 FEET;
SOUTH 86°44'15" EAST 330.61 FEET; NORTH 58°07'31" EAST 324.29 FEET;
SOUTH 87°15'10" EAST 402.56 FEET; NORTH 02°05'17" EAST 660.00 FEET TO THE NORTHERLY LINE OF THE FRACTIONAL NORTHWEST QUARTER (NW ¼) OF THE SOUTHWEST QUARTER (SW ¼) IN SAID SECTION THIRTY (30); THENCE ALONG THE NORTHERLYL LINE OF SAID TRACT SOUTH 87°15'10" EAST 474.17 FEET TO THE POINT OF BEGINNING, CONTAINING 47.813 ACRES MORE OR LESS.

SUBJECT TO A THIRTY FOOT (30') ACCESS EASEMENT AS DECRIBED IN BK. 1439, PG. 647 AND INSTRUMENT NO. 92-046191 BOTH BEING RECORDED WITH THE CIRCUIT CLERK, WASHINGTON COUNTY, ARKANSAS.

SUBJECT TO ANY OTHER RIGHTS-OF-WAY AND/OR EASEMENTS WHETHER OR NOT OF RECORD.

TRACT #6

DESCRIPTION:
A PART OF THE NORTHWEST QUARTER (NW ¼) OF THE NORTHEAST QUARTER (NE ¼) AND A PART OF THE NORTHEAST QUARTER (NE ¼) OF THE NORTHWEST QUARTER (NW ¼), ALL BEING IN SECTION THIRTY-SIX (36), TOWNSHIP SIXTEEN (16) NORTH, RANGE THIRTY-ONE (31) WEST, SAID WASHINGTON COUNTY, ARKANSAS, BEING MORE PARTICULARLY DESCRIBED AS FOLLOWS:

COMMENCING AT A FOUND IRON PIN AT THE SOUTHEAST CORNER OF SAID NORTHWEST QUARTER (NW ¼) OF THE NORTHEAST QUARTER (NE ¼) IN SAID SECTION THIRTY-SIX (36); THENCE ALONG THE SOUTHERLY LINE OF SAID FORTY (40) ACRE TRACT NORTH 87°16'27" WEST 163.05 FEET TO THE POINT OF BEGINNING; THENCE CONTINUING ALONG SAID SOUTHERLY LINE NORTH 87°16'27" WEST 1180.33 FEET TO A FOUND IRON PIN LOCATED IN THE CENTERLINE OF A GRAVEL ROAD; THENCE ALONG SAID CENTERLINE NORTH 04°02'35" EAST 72.47 FEET; THENCE CONTINUING ALONG SAID CENTERLINE NORTH 11°19'49" EAST 40.24 FEET TO THE BEGINNING OF A CURVE TO THE LEFT

HAVING A DELTA ANGLE OF 51°07′26″ AND A RADIUS OF 101.22 FEET; THENCE CONTINUING ALONG SAID CENTERLINE ALONG SAID CURVE AN ARC LENGTH OF 90.32 FEET AND A CHORD BEARING AND DISTANCE OF NORTH 24°09'50" WEST 87.35 FEET; THENCE NORTH 48°44'10" WEST 34.21 FEET TO THE BEGINNING OF A CURVE TO THE LEFT HAVING A DELTA ANGLE OF 42°42′03″ AND A RADIUS OF 215.87 FEET; THENCE CONTINUING ALONG SAID CENTERLINE ALONG SAID CURVE AN ARC LENGTH OF 160.88 FEET AND A CHORD BEARING AND DISTANCE OF NORTH 67°02'42" WEST 157.18 FEET; THENCE CONTINUING ALONG SAID CENTERLINE NORTH 89°17'23" WEST 123.09 FEET; THENCE CONTINUING ALONG SAID CENTERLINE NORTH 87°11'38" WEST 161.28 FEET; THENCE LEAVING SAID CENTERLINE NORTH 01°57'34" EAST 1055.60 FEET TO A FOUND IRON PIN; THENCE SOUTH 87°31'37" EAST 1230.87 FEET TO A FOUND IRON PIN LOCATED ON A BLUFF LINE; THENCE LEAVING SAID BLUFF LINE SOUTH 87°31'37" EAST 436.24 FEET; THENCE SOUTH 01°57'34" WEST 1,324.69 FEET TO THE POINT OF BEGINNING CONTAINING 47.749 ACRES, MORE OR LESS.

LESS AND EXCEPT TWENTY-NINE AND ONE-HALF FEET (29.5′) NORTHERLY AND EASTERLY OF THE CENTERLINE OF ARCHIE WATKINS ROAD (WASHINGTON COUNTY ROAD NO. 265) FOR CITY OF FAYETTEVILLE RIGHT-OF-WAY.

LESS AND EXCEPT: ONE SQUARE FOOT AT THE NORTHWESTERN MOST CORNER OF THE 47.749 ACRE TRACT, HEREIN DESCRIBED, BEING CONVEYED TO RICHARD P. ALEXANDER, JOHN NOCK AND J. MITCHELL MASSEY, BY A QUITCLAIM DEED RECORDED APRIL 18, 2006, AS LAND DOCUMENT #2006-15251 AND 2010-26593.

SUBJECT TO ANY OTHER RIGHTS-OF-WAY AND/OR EASEMENTS WHETHER OR NOT OF RECORD.

Water Tank Tract

DESCRIPTION:
A PART OF THE FRACTIONAL NORTHWEST QUARTER (NW ¼) OF THE SOUTHWEST QUARTER (SW ¼) OF SECTION THIRTY (30), TOWNSHIP SIXTEEN (16) NORTH, RANGE THIRTY (30) WEST, WASHINGTON COUNTY, ARKANSAS, BEING MORE PARTICULARLY DESCRIBED AS FOLLOWS:

COMMENCING AT A FOUND IRON PIN AT THE NORTHEAST CORNER OF SAID FRACTIONAL NORTHWEST QUARTER (NW ¼) OF THE SOUTHWEST QUARTER (SW ¼), SECTION THIRTY (30); THENCE ALONG THE NORTH LINE OF SAID TRACT NORTH 87°15'10″ WEST 474.17 FEET TO THE POINT OF BEGINNING; THENCE LEAVING SAID NORTH LINE THE FOLLOWING COURSES:
SOUTH 02°05'17" WEST 660.00 FEET; NORTH 87°15'10" WEST 660.00 feet; NORTH 02°05'17" EAST 660.00 FEET TO SAID NORTH LINE OF SAID TRACT; THENCE ALONG SAID NORTH LINE SOUTH 87°15'10" EAST 660.00 FEET TO THE POINT OF BEGINNING, CONTAINING 10.00 ACRES, MORE OR LESS.

SUBJECT TO ANY OTHER RIGHTS-OF-WAY AND/OR EASEMENTS WHETHER OR NOT OF RECORD.

CITY OF Fayetteville ARKANSAS

PLANNING COMMISSION MEMO

TO: Fayetteville Planning Commission

THRU: Andrew Garner, City Planning Director

FROM: Jesse Fulcher, Senior Planner

MEETING DATE: ~~June 9, 2014~~ *Updated June 11, 2014*

SUBJECT: **RZN 14-4731: Rezone (REGIONAL PARK/MT. KESSLER RESERVE, 673):** Submitted by CITY STAFF for property located at MT. KESSLER PARK. The property is zoned R-PZD, RESIDENTIAL PLANNED ZONING DISTRICT SOUTHPASS 08-2898 and contains approximately 630 acres. The request is to rezone the property to P-1, INSTITUTIONAL.

RECOMMENDATION:
Staff recommends forwarding **RZN 14-4731** to the City Council with a recommendation for approval.

BACKGROUND:

The subject property is located along Cato Springs Road (south Razorback Road) just west of I-540 and the Fulbright Expressway. The property is a part of the SouthPass Planned Zoning District that was approved in 2008 on approximately 900 acres. The SouthPass development is still an approved project, but the property has since gone back to Chambers Bank.

The 630 acres owned by the City of Fayetteville includes the 200-acre regional park property deeded to the City as part of the Planned Zoning District approval, a 56-acre capped landfill, the 328-acre Mt. Kessler property purchased by the City with a 50/50 matching grant, and a 48-acre parcel deeded by Chambers Bank to be used as a parkland credit for future development. Surrounding land use and zoning is depicted on Table 1.

Table 1
Surrounding Land Use and Zoning

Direction from Site	Land Use	Zoning
North	Single-family residential	Washington County
South	Single-family residential	Washington County
East	Single-family residential	Washington County, R-A Residential Agricultural
West	Single-family residential	Washington County

DISCUSSION:

Request: The request is to rezone 630 acres of R-PZD 08-2898 SouthPass Development to P-1, Institutional.

Public Comment: Staff has not received public comment.

PLANNING COMMISSION ACTION: Required

Date: June 9, 2014 ❒ **Tabled** √ **Forwarded** ❒ **Denied**

Motion: Winston **Second: Chesser** **Vote: 6-0-0**

CITY COUNCIL ACTION: Required

Date: July 1, 2014 ❒ **Approved** ❒ **Denied**

INFRASTRUCTURE:

Streets: The site has access to Judge Cummings Road, an unimproved gravel road. The site also has access to Archie Watkins Road, an unimproved dirt road. Roadway improvements will be determined at the time of development.

Water: Public water is accessible to the site. A 2" water main exists on Archie Watkins Road. The property encompasses two city water storage tanks with a 30" outlet line. The feasibility to connect to this line will be determined by the Water Department.

Sewer: No public sanitary sewer is available to the site.

Drainage: Any additional improvements or requirements for drainage will be determined at time of development. This property is affected by the 100-year floodplain and the Streamside Protection Ordinance.

Fire: This development will be protected by Engine 6 located at 900 S. Hollywood. It is 3.1 miles from the station with an anticipated response time of 7 minutes to the beginning of the development. The Fayetteville Fire Department feels this development will have a moderate effect on calls for service and response times.

Police: The Police Department did not express any concerns with this request.

CITY PLAN 2030 FUTURE LAND USE PLAN: ***City Plan 2030 Future Land Use Map designates this property as a Natural Area, Residential Neighborhood Area, City Neighborhood Area and Civic and Private Open Space Parks.***

FINDINGS OF THE STAFF

1. A determination of the degree to which the proposed zoning is consistent with land use planning objectives, principles, and policies and with land use and zoning plans.

Finding: **The 630-acre parcel is owned by the City of Fayetteville and is intended/required to be used as a community park and preserve. Rezoning the property to Institutional is the consistent with the land use plans for this property and consistent with the adopted land use plan.**

2. A determination of whether the proposed zoning is justified and/or needed at the time the rezoning is proposed.

Finding: **The zoning is justified, since the property has been recently deeded to the City of Fayetteville. The Institutional zoning district is the district applied to all City parks and natural areas.**

3. A determination as to whether the proposed zoning would create or appreciably increase traffic danger and congestion.

Finding: **Rezoning the property to Institutional will not appreciably increase traffic danger or congestion. The development of a regional park will increase traffic in the area. However, plans for the regional park were approved with the original PZD in 2008, so this request won't increase traffic congestion beyond the existing zoning. This request is to have the City owned park land and preserve area within a standard zoning district consistent with all other park property.**

4. A determination as to whether the proposed zoning would alter the population density and thereby undesirably increase the load on public services including schools, water, and sewer facilities.

Finding: **The proposed zoning will decrease population density, since much of the land was intended to be developed with housing as part of the SouthPass proposal. The regional park will still be developed, but the remainder of the property is mostly within the Mount Kessler preserve and will not be developed.**

5. If there are reasons why the proposed zoning should not be approved in view of considerations under b (1) through (4) above, a determination as to whether the proposed zoning is justified and/or necessitated by peculiar circumstances such as:

   a. It would be impractical to use the land for any of the uses permitted under its existing zoning classifications;

   b. There are extenuating circumstances which justify the rezoning even though there are reasons under b (1) through (4) above why the proposed zoning is not desirable.

Finding: **N/A**

BUDGET/STAFF IMPACT:
None

ATTACHMENTS:

- Proposed zoning criteria
- Fire Department comments
- Applicant's letter
- Planned Zoning District materials
- Rezoning exhibit/survey
- Maps

161.29 District P-1, Institutional

(A) *Purpose.* The Institutional District is designed to protect and facilitate use of property owned by larger public institutions and church related organizations.

(B) *Uses.*

(1) *Permitted uses.*

Unit 1	City-wide uses by right
Unit 4	Cultural and recreational facilities
Unit 5	Government facilities

(2) *Conditional uses.*

Unit 2	City-wide uses by conditional use permit
Unit 3	Public protection and utility facilities
Unit 26	Multi-family dwellings
Unit 36	Wireless communications facilities
Unit 42	Clean technologies

(C) *Density.* None.

(D) *Bulk and area regulations.* None.

(E) Setback regulations.

Front	30 ft.
Front, if parking is allowed between the right-of-way and the building	50 ft.
Side	20 ft.
Side, when contiguous to a residential district	25 ft.
Rear	25 ft.
Rear, from center line of public alley	10 ft.

(F) *Height regulations.* There shall be no maximum height limits in P-1 Districts, provided, however, that any building which exceeds the height of 20 feet shall be set back from any boundary line of any residential district a distance of one foot for each foot of height in excess of 20 feet.

(G) *Building area.* On any lot the area occupied by all buildings shall not exceed 60 % of the total area of such lot.

(Code 1965, App. A., Art. 5(XI); Ord. No. 2603; Ord. No. 2603, 2-19-80; Ord. No. 2621, 4-1-80; Ord. No. 1747, 6-29-70; Code 1991, §160.042; Ord. No. 4100, §2 (Ex. A), 6-16-98; Ord. No. 4178, 8-31-99; Ord. 5073, 11-06-07; Ord. 5195, 11-6-08; Ord. 5312, 4-20-10)

Fayetteville
ARKANSAS
www.accessfayetteville.org

THE CITY OF FAYETTEVILLE, ARKANSAS
FIRE DEPARTMENT
303 West Center Street
Fayetteville, AR 72701
P (479) 575-8365 F (479) 575-0471

Zoning Review

To: **Jesse Fulcher**
From: **Will Beeks**
Date: **May 8, 2014**
Re: **RZN 14-4731**

This development will be protected by Engine 6 located at 900 S Hollywood Ave.
It is 3.1 miles from the station with an anticipated response time of 7 minutes to the beginning of the development.
The Fayetteville Fire Department feels this development will have a moderate effect on our calls for service or our response times.

If you have any questions please feel free to contact me.

Will Beeks
Assistant Fire Marshal
Fayetteville Fire Department

CITY OF
Fayetteville
ARKANSAS

PARKS AND RECREATION

April 30, 2014

Craig Honchell, Chair
Fayetteville Planning Commission
City of Fayetteville, Arkansas
113 W. Mountain St.
Fayetteville AR 77201

Re: Rezone Request- Fayetteville Regional Park

Dear Planning Commission Chair,

Please accept this letter as a formal request to rezone the Regional Park property located at 2600 W. Judge Cummings Rd. from R-PZD, Residential Planned Zoning District, to P-1, Institutional. The property is currently owned by the City of Fayetteville and is part of the land formerly known as Southpass. The development plan for the area was created and established in 2006 including a mix of uses, centered around a 200 acre regional park. The development climate has significantly changed since that time and a development timeframe for the surrounding area is not known.

This rezoning request is a continued effort to standardize the zoning of park properties throughout the City as well as to place the land in a more appropriate zoning for park development. The zoning allows cultural and recreational facilities as permitted uses and is the zoning that is best suited for park property as it is designed to protect and facilitate use of property owned by larger public institutions.

The city is currently contracted with a consultant to finalize the master plan for the park which includes soccer, baseball and softball fields, volleyball, basketball and tennis courts, as well as playgrounds, pavilions, trails, an amphitheater, great lawn, parks office and maintenance facility and associated parking. Additionally, a large scale development for phase one of the park is anticipated to be submitted in July. Phase one of the park will include soccer, baseball, the great lawn, a pavilion and associated restrooms and parking.

Water will be available via a 24" line from the City of Fayetteville water tanks located at the top of Judge Cummings Rd.

Sewer is not currently available and the City is planning for an onsite sewer package plant.

The proposed zoning is consistent with the Future Land Use Map and will allow for civic park and recreational space. It is not anticipated that P-1, Institutional zoning will create appreciably more traffic danger or congestion. The current R-PZD zoning established a planning area for the park, effectively keeping the use the same.

A property line adjustment has been submitted for the property and will affect the parcel numbers. Final parcel numbers and deeds will be provided once the property line adjustment has been filed.

Kindest Regards,

Alison Jumper

Alison Jumper
Park Planning Superintendent

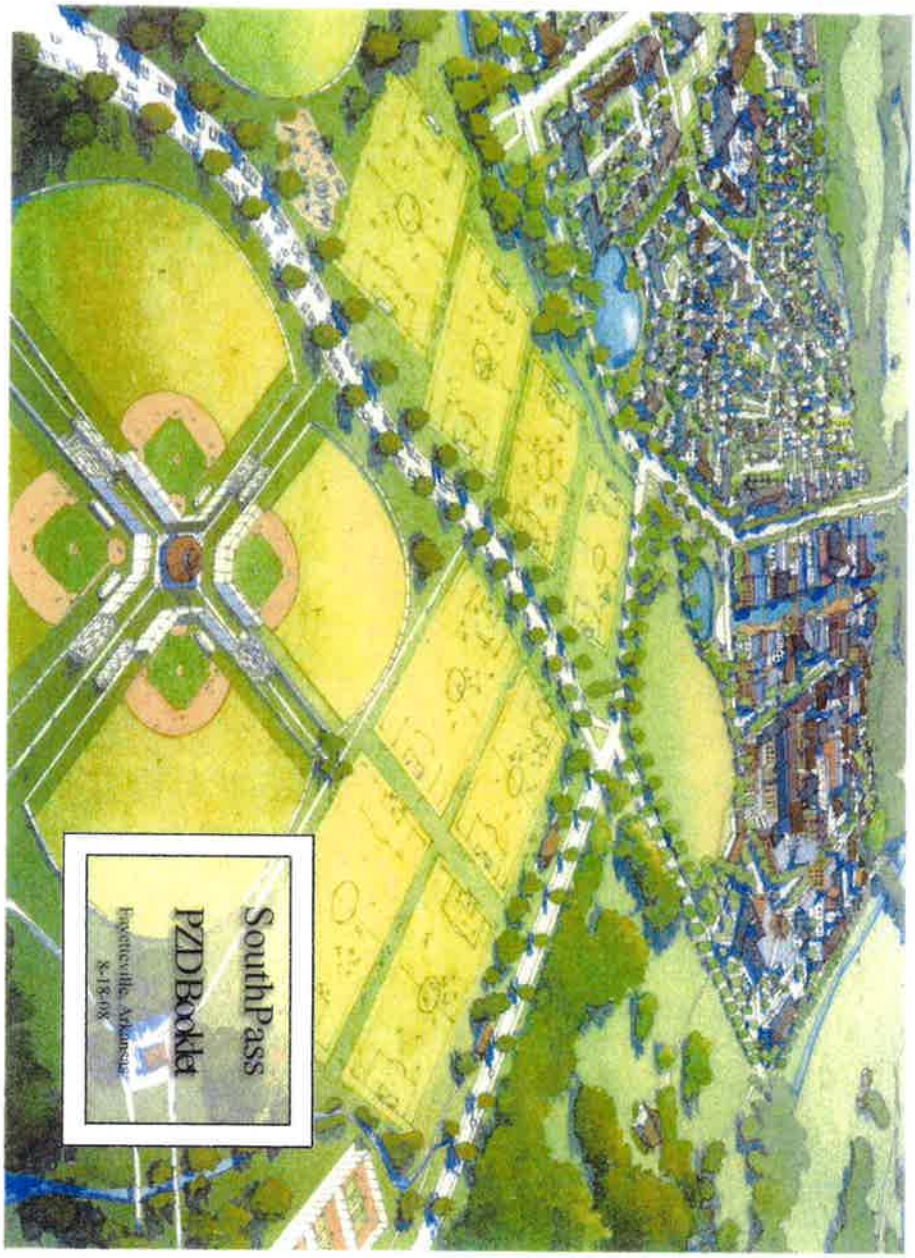

CITY COUNCIL
APPROVED
DATE: 11-04-08

SouthPass Mast

G. Zoning Comparison Chart

Description	Current County Zoning	Current City Zoning R-A	PA-1A Town Center Commercial Core	PA-1B Town Center Mixed-Use	PA-1C Town Center Lofts	PA-2A Crescent Park Single-Family	PA-2B Crescent Park Apartments	PA-3A Kessler Mtn. Bluff Single Family
Permitted Use: Units Allowed	Unit 6 Agriculture Unit 8 Single-family dwellings	Unit 1 City-wide uses by right Unit 3 Public Protection and Utility Facilities Unit 6 Agriculture Unit 7 Animal Husbandry Unit 8 Single-family dwellings Unit 9 Two-family dwellings Unit 37 Manufactured Homes	Unit 1 City-wide uses by right Unit 4 Cultural and recreational facilities Unit 5 Government facilities Unit 12 Offices studios and related services Unit 13 Eating places Unit 14 Hotel motel and amusement facilities Unit 15 Neighborhood shopping Unit 16 Shopping goods Unit 19 Commercial recreation small sites Unit 24 Home occupations Unit 25 Professional offices Unit 26 Multi-family dwellings Unit 34 Liquor store	Unit 1 City-wide uses by right Unit 4 Cultural and recreational facilities Unit 5 Government facilities Unit 12 Offices Studios etc Unit 13 Eating Facilities Unit 14 Hotel Motel and amusement Unit 15 Neighborhood Shopping Goods Unit 16 Shopping Goods Unit 19 Commercial recreation small sites Unit 24 Home Occupations Unit 25 Professional Offices Unit 26 Multi-family Dwellings Unit 34 Liquor Stores	Unit 1 City-wide uses by right Unit 3 Public Protection and Utility Facilities Unit 4 Cultural and Recreational Facilities Unit 5 Government Facilities Unit 10 Three-family Dwellings Unit 12 Offices Studios, etc Unit 14 Hotel Motel and amusement Unit 24 Home Occupations Unit 26 Multi-family Dwellings Accessory Dwellings	Unit 1 City-wide uses by right Unit 8 Single Family Dwellings	Unit 1 City-wide uses by right Unit 9 Two-Family Dwellings Unit 10 Three-Family Dwellings Unit 12 Offices Studios etc Unit 26 Multi-Family Dwellings	Unit 1 City-wide uses by right Unit 8 Single Family Dwellings
Conditional Use Units Allowed	By review of Washington County Planning Board	Unit 2 City wide uses by conditional use permit Unit 4 Cultural and recreational facilities Unit 5 Government facilities Unit 20 Commercial recreation large sites Unit 24 Home occupations Unit 36 Wireless Communication facilities	Unit 2 City-wide uses by conditional use permit Unit 29 Dance Halls Unit 35 Outdoor music establishment Unit 40 Sidewalk cafes	Unit 2 City-wide uses by conditional use permit Unit 29 Dance Halls Unit 35 Outdoor Music Establishment Unit 40 Sidewalk cafes	Unit 2 City-wide uses by conditional use permit Unit 13 Eating Facilities Unit 15 Neighborhood Shopping Goods Unit 16 Shopping Goods Unit 25 Professional Offices Unit 40 Sidewalk cafes	Unit 2 City-wide uses by conditional use permit Unit 3 Public Protection and Utility Facilities Unit 4 Cultural and Recreational Facilities Unit 5 Government Facilities Unit 9 Two-Family Dwellings Unit 24 Home occupation Unit 25 Professional Offices Accessory Dwellings	Unit 2 City-wide uses by conditional use permit Unit 3 Public Protection and Utility Facilities Unit 4 Cultural and Recreational Facilities Unit 5 Government Facilities Unit 13 Eating Places Unit 15 Neighborhood Shopping Goods Unit 24 Home Occupation Unit 25 Professional Offices Unit 40 Sidewalk Cafes	Unit 2 City-wide uses by conditional use permit Unit 3 Public Protection and Utility Facilities Unit 4 Cultural and Recreational Facilities Unit 5 Government Facilities Unit 9 Two-Family Dwellings Unit 10 Three-Family Dwellings Unit 24 Home Occupation Unit 25 Professional Offices
Lot Width Minimum	Single-family 75 ft	200 ft minimum	No Minimum	No Minimum	No Minimum	32 ft	40 ft	Lots 1-52 shall have a minimum lot width of 80 Lots 53-103 shall have a minimum lot width of 60 feet
Lot Area Minimum	Single-family 1 acre	2 acres	No Maximum	No Maximum	N/A	2,800 sq ft	Minimum 1,200 sq ft for live house office of community. 900 sq ft for town-homes 6,000 sq ft for a typical lot	Lots 1-52 shall have a 10,000sq ft lot width minimum Lots 53-103 shall have 5,000sq ft lot width minimum
Land Area per Dwelling Unit	Single-family 1 acre	2 acres	No Bedroom 670 sq ft One Bedroom 800 sq ft Two or more Bedrooms 1,000 sq ft minimums	No Bedroom 670 sq ft One Bedroom 800 sq ft Two or more Bedrooms 1,000 sq ft minimums	No Bedroom 670 sq ft One Bedroom 800 sq ft Two or more Bedrooms 1,000 sq ft minimums	Single-Family 2,800 sq ft	No Bedroom 670 sq ft One Bedroom 800 sq ft Two or more Bedrooms 1,000 sq ft minimums	Single-Family 5,000 sq ft
Density	Single-family 1 unit per acre	0.5 unit/acre	16 Units per acre or less 10,266 sq ft per acre or less	28.5 Units per acre or less 3,881 sq ft per acre or less	35 Units per acre or less 1,111 sq ft per acre or less	5.97 Units per acre or less	26.79 Units per acre or less 662 sq ft per acre or less	4 Units per acre or less
Setback Requirements	Front 25 ft Side 10 ft Rear 25 ft	Front 35 ft Side 20 ft Rear 35 ft	Front - 75% of the lot width at the street frontage shall be covered by buildings at the right-of-way line. The BTL does not apply to Cato Springs Rd and Judge Cummings Rd Side Internal - 0 ft Side Adjacent Lot - 5 ft Side Street - 6 ft Rear - 0 ft	Front - 70% of building frontage is required to be built up to the Build to Line Side Internal- 0 ft Side Adjacent Lot - 5 ft Side Street - 6 ft Rear - 0 ft	Front - 50% of building frontage is required to be built up to the Build to Line Side Internal - 0ft Side Adjacent Lot - 5ft Side Street - 6ft Rear - 0ft	Front - Minimum - 8 ft Maximum - 15 ft Side - 6 from wall 4 from eave 0 on opposite P/L Rear - 0 ft Rear Garage - 7.5 ft If abutting alley from rear lot line	Front - Shall be setback in a 0 to 15 Build to Zone measured from the ROW Side - 6 from wall 4 from eave 0 on opposite P/L Rear - 0 ft Rear Garage - 7.5 ft If abutting alley from rear lot line	Front - Minimum - 0 ft Maximum - 15 ft Side - 6 from wall 4 from eave 0 on opposite P/L Rear - 0 ft Rear Garage 7 ft
Height Regulations	None	Any building over 15 ft shall be set back from and boundary line of any residential district a distance of one foot per each foot of height in excess of 15 ft	20 ft minimum 55 ft maximum	24 ft minimum 80 ft maximum	24 ft minimum 80 ft maximum	Primary Building - Minimum - 24 ft Maximum - 45 ft	Minimum Height - 24 ft Maximum Height - 60 ft	Maximum Height - 45
Building Area	Not to exceed 40% of total lot area	None	No Minimum	N/A	N/A	80% Maximum	70% Maximum	70% Maximum

© 2008 Appian Centre for Design, Inc

Description	PA-3B Kessler Mtn. Bluff Multi-Family	PA-3C Kessler Mtn. Bluff Single Family Cluster	PA-4A Park Knoll Single Family	PA-4B Park Knoll Multi Family	PA-5 Civic Areas	PA-6A Regional Park	PA-6B Open Space Area
Permitted Use Units Allowed	Unit 1 City - wide uses by right Unit 8 Single-Family Dwellings Unit 9 Two-family Dwellings Unit 10 Three-family Dwellings Unit 26 Multi-Family Dwellings	Unit 1 City-wide uses by right Unit 8 Single Family Dwellings Accessory Dwellings	Unit 1 City-wide uses by right Unit 8 Single Family Dwellings Unit 9 Two-family Dwellings Unit 10 Three-family Dwellings Accessory Dwellings	Unit 1 City-wide uses by right Unit 9 Two-family Dwellings Unit 10 Three-family Dwellings Unit 26 Multi-family Dwellings	Unit 1 City-wide uses by right Unit 4 Cultural and recreational facilities Unit 5 Government facilities	Unit 1 City-wide uses by right Unit 4 Cultural and recreational facilities Unit 5 Government facilities	Unit 1 City-wide uses by right
Conditional Use Units Allowed	Unit 2 City-wide uses by conditional use permit Unit 3 Public Protection and Utility Facilities Unit 4 Cultural and Recreational Facilities Unit 5 Government Facilities Unit 13 Eating Places Unit 15 Neighborhood Shopping Goods Unit 24 Home Occupation Unit 25 Professional Offices Unit 40 Sidewalk Cafes	Unit 2 City-wide uses by conditional use permit Unit 3 Public Protection and Utility Facilities Unit 4 Cultural and Recreational Facilities Unit 5 Government Facilities Unit 9 Two-family Dwellings Unit 13 Eating Places Unit 15 Neighborhood Shopping Goods Unit 24 Home Occupation Unit 25 Professional Offices Unit 26 Multi-family Dwellings	Unit 2 City-wide uses by conditional use permit Unit 3 Public Protection and Utility Facilities Unit 4 Cultural and Recreational Facilities Unit 5 Government Facilities Unit 24 Home Occupation	Unit 2 City-wide uses by conditional use permit Unit 3 Public Protection and Utility Facilities Unit 4 Cultural and Recreational Facilities Unit 5 Government Facilities Unit 13 Eating Places Unit 15 Neighborhood Shopping Goods Unit 24 Home Occupation Unit 25 Professional Offices Unit 40 Sidewalk Cafes	Unit 2 City-wide uses by conditional use permit Unit 3 Public Protection and Utility Facilities	Unit 2 City-wide uses by conditional use permit Unit 3 Public Protection and Utility Facilities Unit 20 Commercial Recreation Large Sites	Unit 2 City-wide uses by conditional use permit Unit 4 Cultural and Recreational Facilities Unit 20 Commercial Recreation Large Sites
Lot Width Minimum	60 ft	Lots 1-54 shall have a minimum lot width of 24 feet Lots 55-106 shall have a minimum lot width of 50 feet Lots 107-168 shall have a minimum lot width of 40 feet	25 ft	40 ft	No Minimum	N/A	N/A
Lot Area Minimum	5 000 sq ft	Lots 1-54 shall have a 2 500 sq ft lot area minimum Lots 55-106 shall have a 8 000 sq ft lot area minimum Lots 107-168 shall have a 5 000 sq ft lot area minimum	3 000 sqft	Minimum 1 200sq ft for live/work office or community commercial 900sq ft for townhomes 6 000sq ft for typical lot	No Minimum	N/A	N/A
Land Area per Dwelling Unit	No Bedroom 670 sq ft One Bedroom 800 sq ft Two or more Bedrooms 1 000 sq ft minimums	Single-Family 2 400 sqft	Single-Family 3 000 sqft	No Bedroom 670 sq ft One Bedroom 800 sq ft Two or more Bedrooms 1,000 sq ft minimum	N/A	N/A	N/A
Density	12 Units per acre or less 159 sq ft per acre or less	3 4 Units per acre or less	4 2 Units per acre or less	10 5 units per acre	1 408 sqft per acre or less	124 7 sqft per acre or less	N/A
Setback Requirements	Front - Minimum - 0 ft Maximum - 15 ft Side - 6 from wall 4 from eave 0 on opposite P/L Rear - 7 ft Rear Garage - 7 5 ft If abutting alley from rear lot line	Front - Minimum - 0 ft Maximum - 15 ft Side - 6 from wall 4 from eave 0 on opposite P/L Rear 7 ft Rear Garage - 7 5 ft If abutting alley from rear lot line	Front - 8 ft Side - 6 from wall 4 from eave 0 on opposite P/L Rear - 7 ft Rear Garage - 7 5 ft If abutting alley from rear lot line	Front - Shall be setback in a 10 to 25 Build to Zone measured from the ROW Side - 6 from wall 4 from eave 0 on opposite P/L Rear - 7 ft Rear Garage - 7 ft	Front - Minimum - 10ft Side - 8 ft Rear - 7 ft Rear Garage - N/A	Front - Minimum 20 ft Side - Minimum 15 ft Rear - Minimum 15 ft	Front - Minimum 20 ft Side - Minimum 15 ft Rear - Minimum 15 ft
Height Regulations	60 ft max	45 ft max	45 ft max	60 ft max	Minimum Height - 24 ft Maximum Height - 60 ft	40 ft	N/A
Building Area	80% Maximum	70% Maximum	70% Maximum	70% Maximum	70% Maximum	N/A	N/A

© 2008 Appian Centre for Design, Inc

© 2008 Appian Centre for Design, Inc

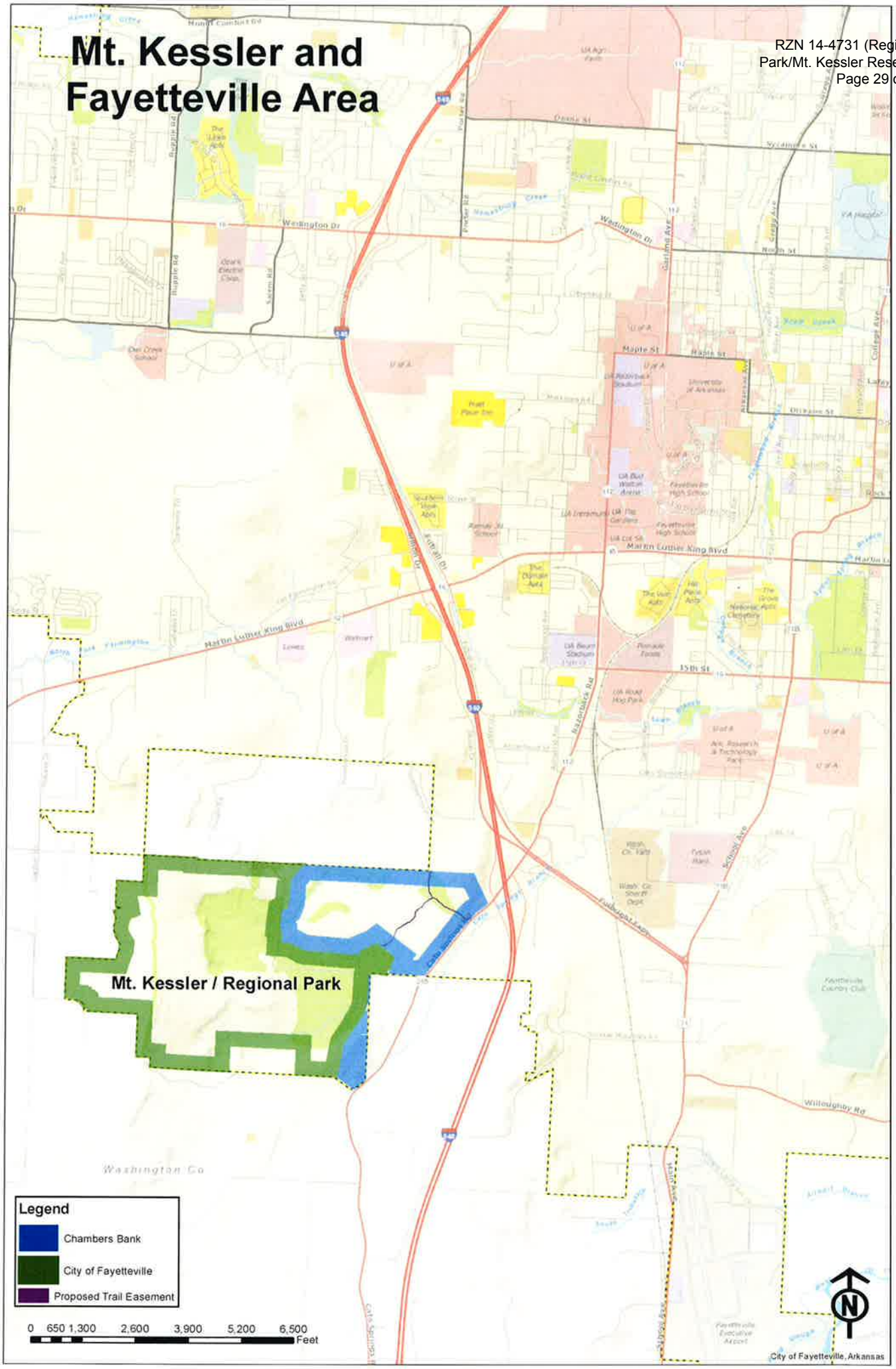
Mt. Kessler and Fayetteville Area
Mt. Kessler / Regional Park
Legend
Chambers Bank
City of Fayetteville
Proposed Trail Easement
0 650 1,300 2,600 3,900 5,200 6,500
Feet
City of Fayetteville, Arkansas

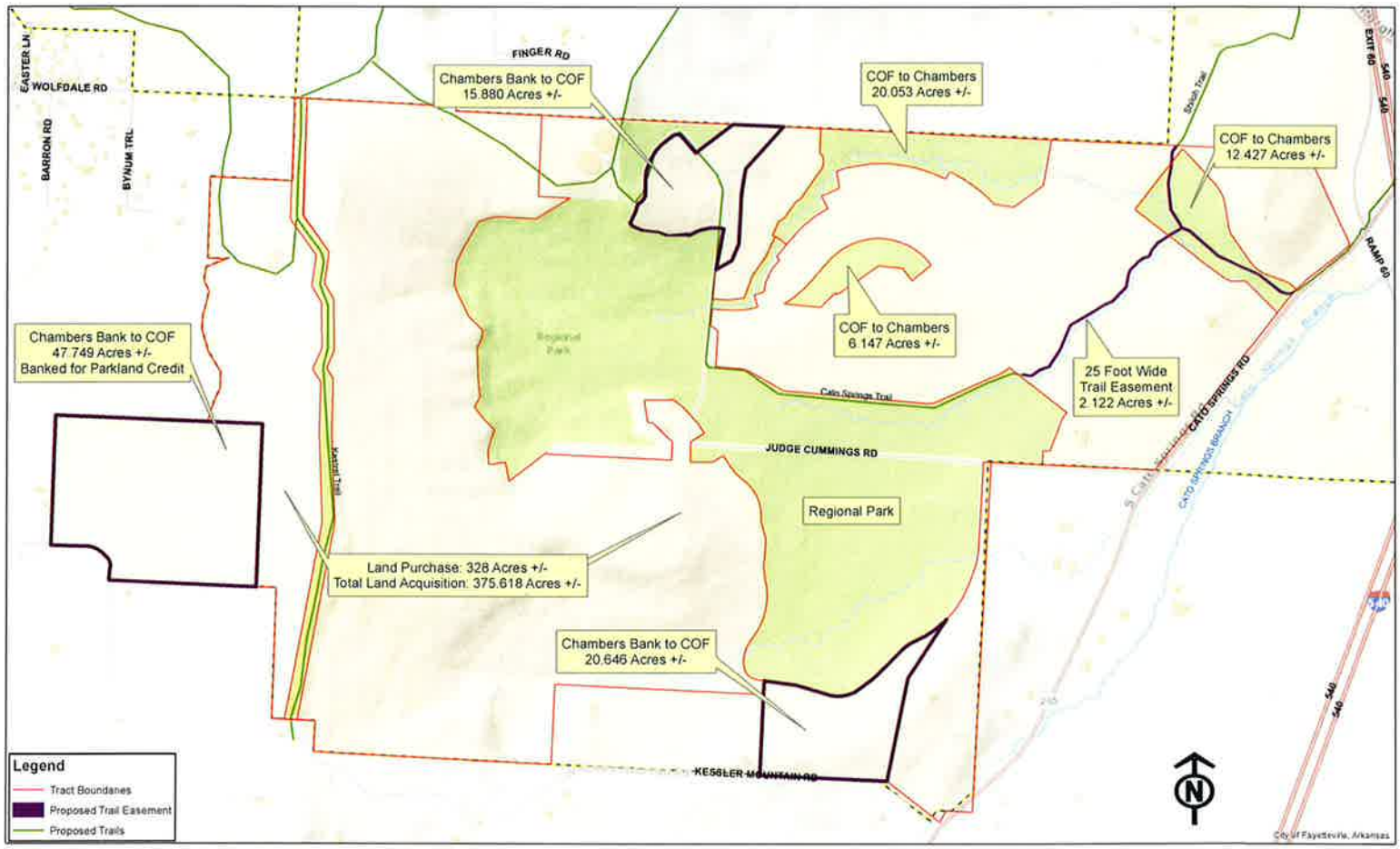

0 225 450 900 1,350 1,800 2,250 Feet

Mt. Kessler / Regional Park

February 3rd, 2014 Fayetteville

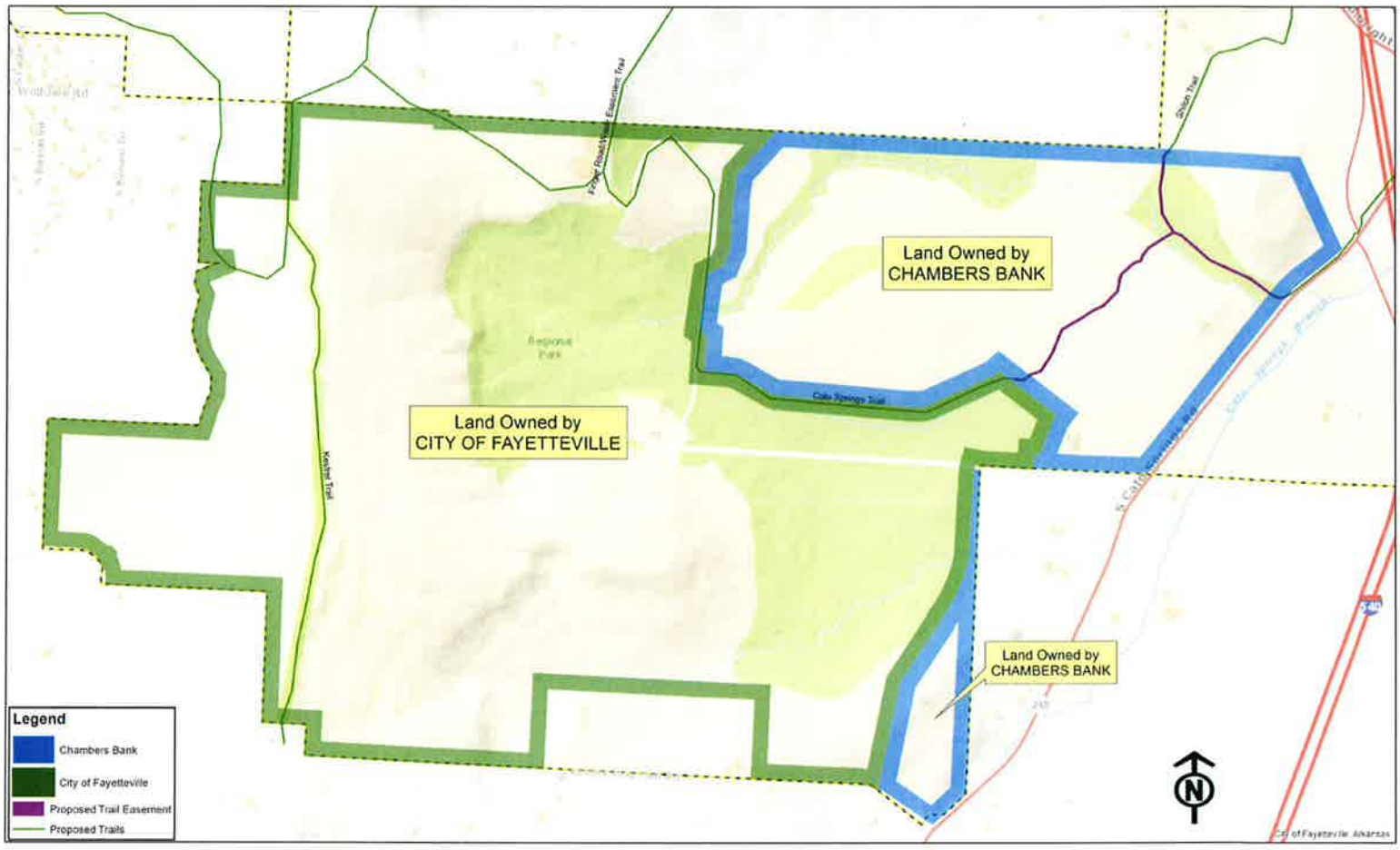

Mt. Kessler / Regional Park

February 3rd, 2014

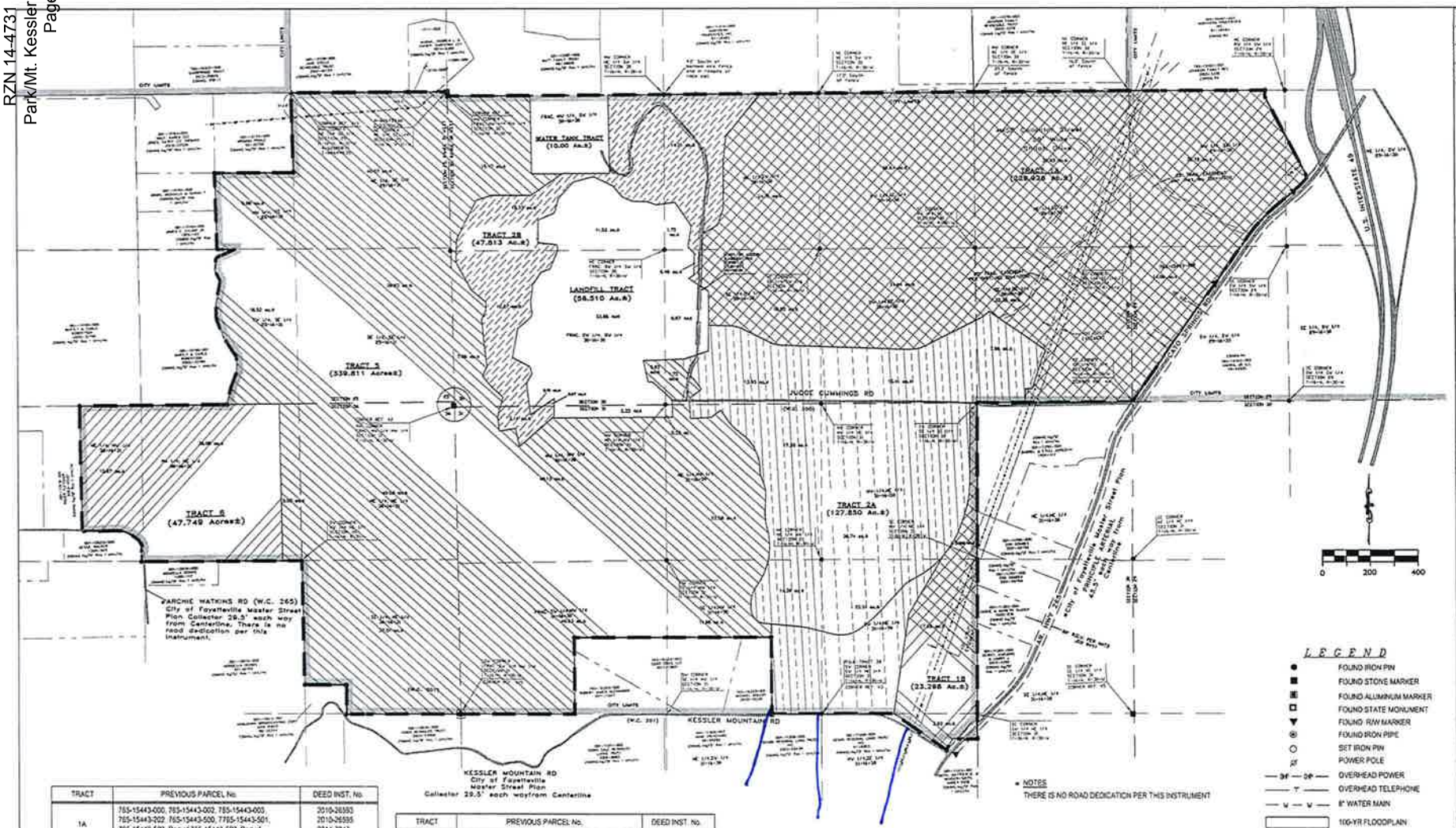

TRACT	PREVIOUS PARCEL No.	DEED INST. No.
1A	765-15443-000, 765-15443-002, 765-15443-003, 765-15443-202, 765-15443-500, 7765-15443-501, 765-15443-503, Part of 765-15443-502, Part of 765-15443-200, & Part of 765-15443-203	2010-26593 2010-26595 2014-7047
1B	Part of 765-16323-600	2010-26593
2A	765-16323-400, 765-16323-601, Part of 765-15443-203, Part of 765-15443-502, Part of 765-16323-600	2010-26593 2010-26595
2B	Part of 765-15443-200, Part of 765-15443-201, Part of 765-15443-203, Part of 765-16323-401	2010-26595
5	765-16322-600, 765-16322-700, 765-16322-701, 765-16322-800, 765-16322-801, 765-16322-900, 765-16322-901, 765-16323-102, 765-16323-300, 765-16323-403, & 765-15443-207	2010-26593 2010-26595 2010-35811 2014-7045
6	Part of 765-16323-100	2010-26593

TRACT	PREVIOUS PARCEL No.	DEED INST. No.
WATER TANK TRACT	Part of 765-15443-201	2010-26595
LANDFILL TRACT	765-15443-100, 765-15443-204, 765-15443-205, 765-15443-300, 765-15323-402, Part of 765-15443-201, Part of 765-15443-203, & Part of 765-15443-400	2005-48123 2010-26595 2010-35811 2014-6373

FILED SURVEYS:
2005-52517
2009-14013
2010-28100
2012-13553

NOTES
THERE IS NO ROAD DEDICATION PER THIS INSTRUMENT

According to the Flood Insurance Rate Map, dated 4/2/2008, Panel No. 05143C0215F, a portion of the northeastern tract as shown hereon is located in Zone A - 100 Year Floodplain.

LEGEND
- FOUND IRON PIN
- FOUND STONE MARKER
- FOUND ALUMINUM MARKER
- FOUND STATE MONUMENT
- FOUND R/W MARKER
- FOUND IRON PIPE
- SET IRON PIN
- POWER POLE
- OVERHEAD POWER
- OVERHEAD TELEPHONE
- 8" WATER MAIN
- 100-YR FLOODPLAIN
- LIMITS OF SURVEY
- CITY LIMITS

City Plat Pages 673-676, 711-714

SURVEYED BY: DVO/JAP
DRAWN BY: JTS
DESIGNED BY: -
FILE NAME: PLA032414.dwg

TITLE: PROPERTY LINE ADJUSTMENT
MOUNT KESSLER
ADJUSTED PROPERTY LINES

REVISED

CITY OF Fayetteville ARKANSAS
ENGINEERING DIVISION
113 W. MOUNTAIN STREET
PHONE NO. (479) 575-8228

DATE: Apr. 22, 2014
SHEET: 2/6
PROJECT: Mt. Kessler

RZN14-4731

Close Up View

KESSLER RESERVE

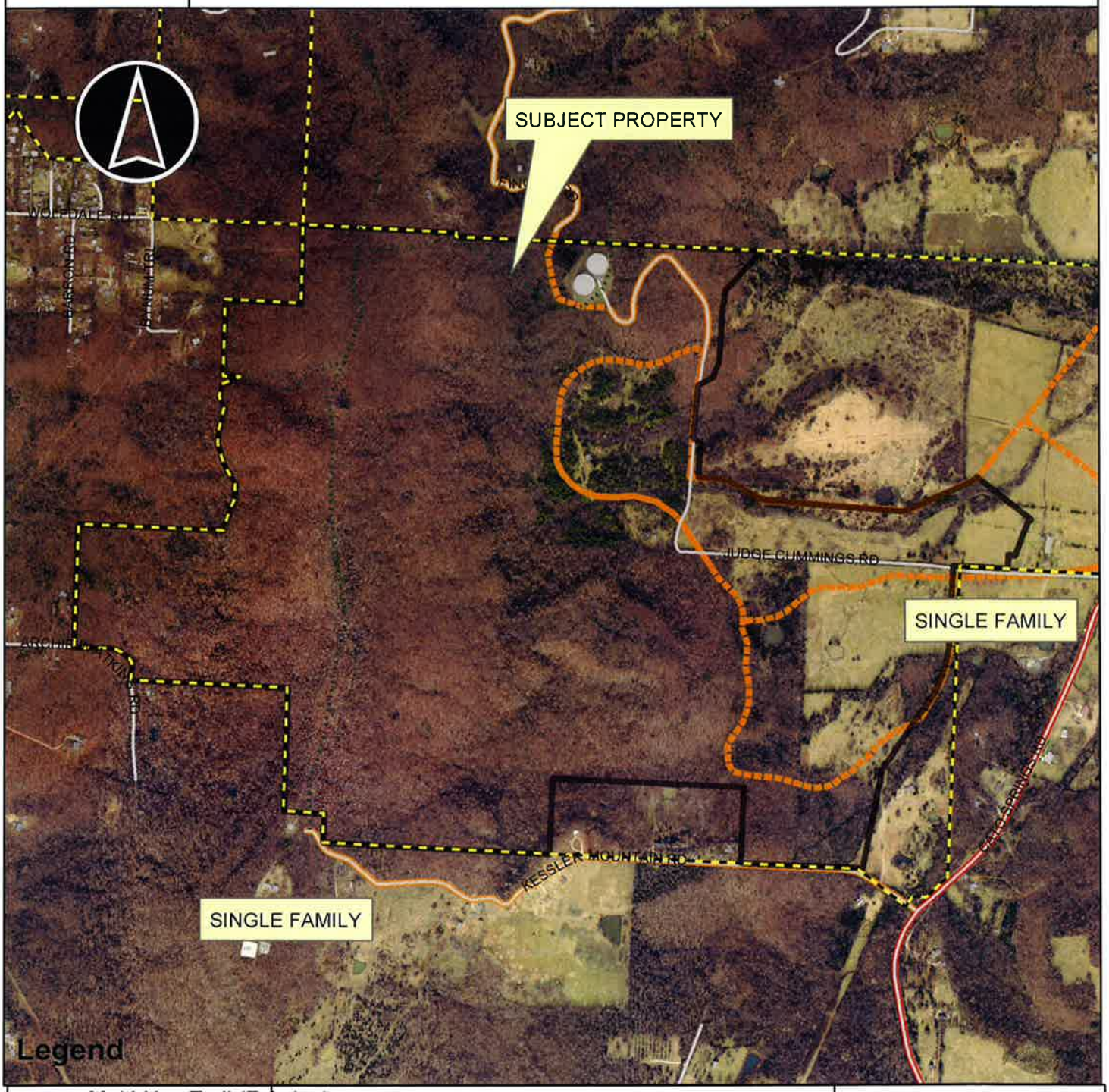

Legend

Overview

- Multi-Use Trail (Existing)
- Future Trails
- Fayetteville City Limits
- RZN14-4731
- Footprints 2010
- Design Overlay District

0 500 1,000 2,000 3,000 4,000 Feet

RZN14-4731

Close Up View

KESSLER RESERVE

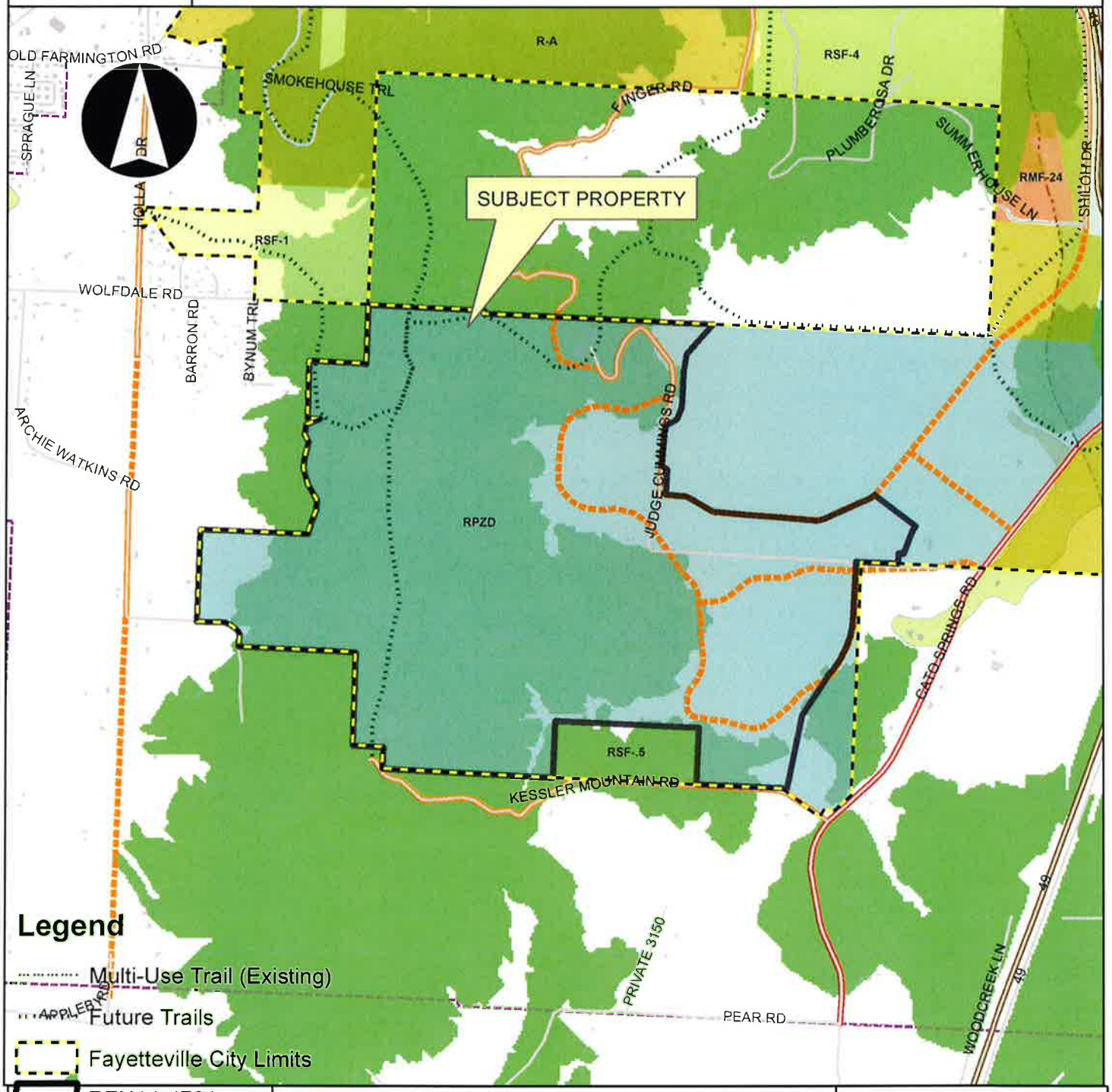

Overview

RZN14-4731

Future Land Use

MT. KESSLER RESERVE

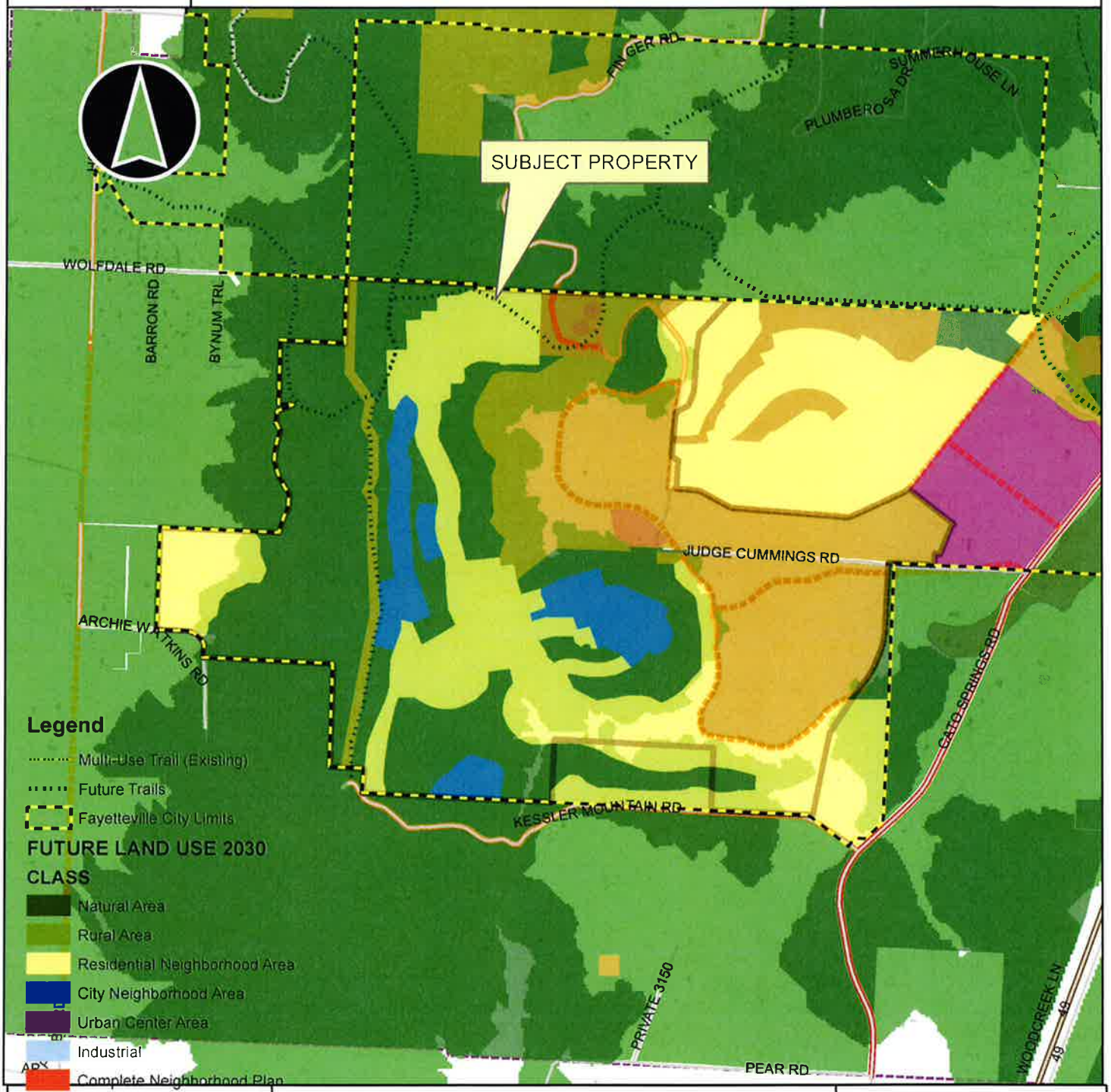

RZN14-4731

One Mile View

MT. KESSLER RESERVE

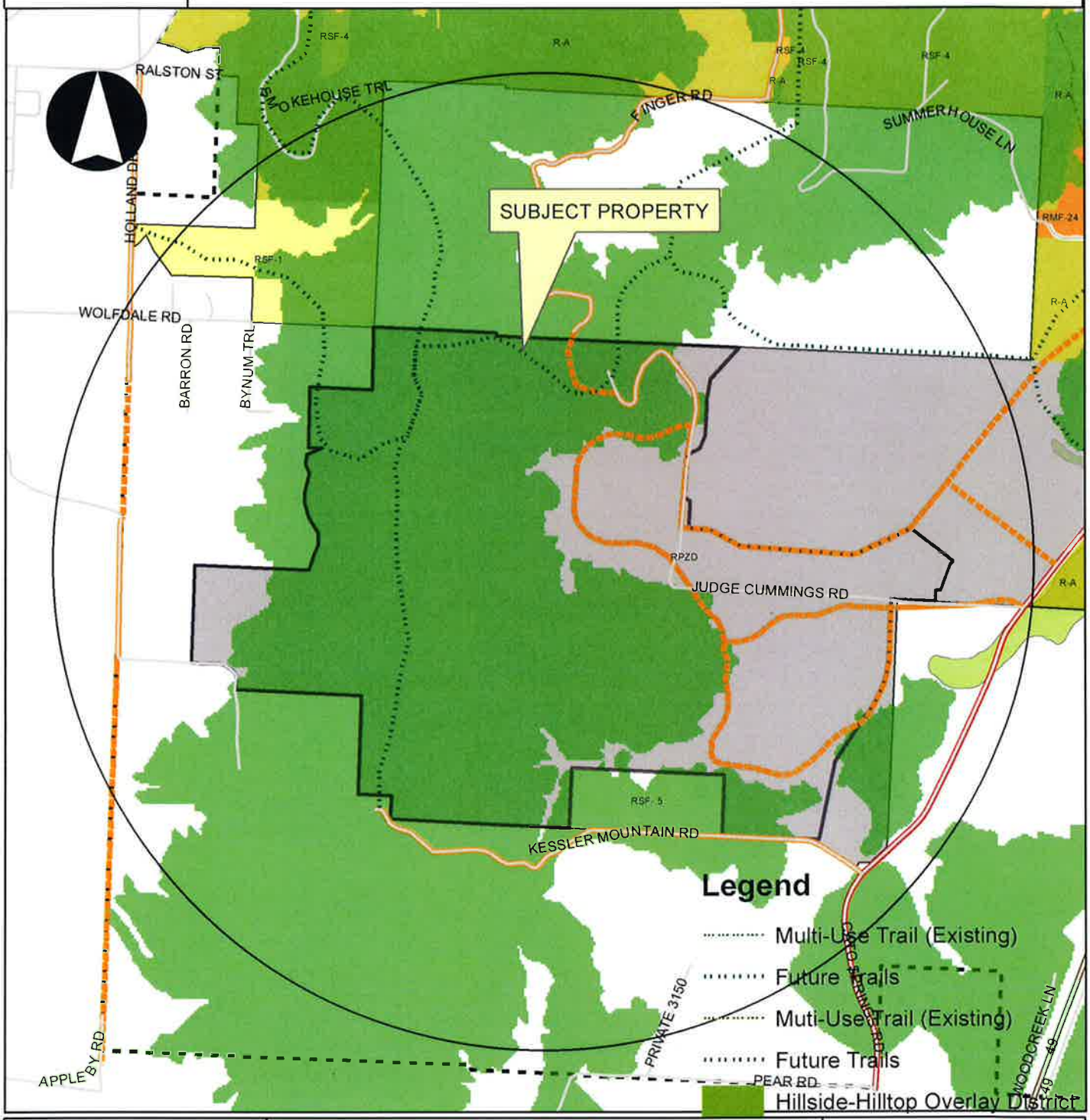

Overview

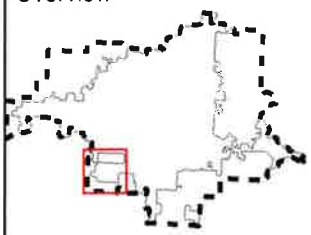

Legend

Subject Property

RZN14-4731

Boundary

RZN14-4731

Design Overlay District

Planning Area

Fayetteville

0 0.25 0.5 1 Miles

City of Fayetteville Item Review Form

2014-0287

Legistar File Number

07/15/2014

City Council Meeting Date - Agenda Item Only

N/A for Non-Agenda Item

Andrew Garner

Submitted By

Development Services

Department

Action Required:

VAC 14-4753: Vacation (1560 S. HAPPY HOLLOW RD./RECYCLING AND TRASH COLLECTION FACILITY, 604): Submitted by CITY STAFF for property located at 1560 S. HAPPY HOLLOW RD. The property is zoned I-2, GENERAL INDUSTRIAL. The request is to vacate 2.0 acres of existing street right-of-way.

Does this item have a cost? No

Cost of this request	Category or Project Budget	Program or Project Name
Account Number	Funds Used to Date	Program or Project Category
Project Number	$0.00 Remaining Balance	- Fund Name

Budgeted Item? **Budget Adjustment Attached?**

V20130812

Previous Ordinance or Resolution #

Original Contract Number:

Comments:

ENTERED 6/26/14 KG

ENTERED 6/27/14

Chris Brown for Jeremy Pate

6-27-14

Paul A. Becker 6-29-2014

6-29-14

CITY OF Fayetteville ARKANSAS

CITY COUNCIL AGENDA MEMO

MEETING OF JULY 15, 2014

TO: Fayetteville City Council

THRU: Andrew Garner, City Planning Director

FROM: Andrew Garner, City Planning Director

DATE: June 25, 2014

SUBJECT: **VAC 14-4753: Vacation (1560 S. HAPPY HOLLOW RD./RECYCLING AND TRASH COLLECTION FACILITY, 604):** Submitted by CITY STAFF for property located at 1560 S. HAPPY HOLLOW RD. The property is zoned I-2, GENERAL INDUSTRIAL. The request is to vacate 2.0 acres of existing street right-of-way.

RECOMMENDATION:
Staff and the Planning Commission recommend approval of an ordinance to vacate existing street right-of-way.

BACKGROUND:
The City's Transportation Division, Parks and Recreation Department, Fleet Operations, and Recycling and Trash Collection offices and storage yards are located south of 15th Street/Happy Hollow Road. The primary access into this campus is through a paved two-lane drive off of Happy Hollow Road that is gated in several places. This access drive is located within existing street right-of-way for Happy Hollow Road that is proposed to be vacated.

DISCUSSION:
On June 23, 2014 the Planning Commission forwarded this item to the City Council with a recommendation of approval with a vote of 7-0-0.

BUDGET/STAFF IMPACT:
N/A

Attachments:
CC Ordinance
Exhibit A
Exhibit B
Planning Commission Staff Report

ORDINANCE NO.

AN ORDINANCE APPROVING VAC 14-4753 SUBMITTED BY CITY STAFF FOR PROPERTY LOCATED AT 1560 S. HAPPY HOLLOW ROAD TO VACATE EXISTING STREET RIGHT-OF-WAY FOR HAPPY HOLLOW ROAD.

WHEREAS, the City Council has the authority under A.C.A. § 14-54-104 to vacate public grounds or portions thereof which are not required for corporate purposes; and

WHEREAS, the City Council has determined that the following described portion of the platted utility easements are not required for corporate purposes;

NOW, THEREFORE, BE IT ORDAINED BY THE CITY COUNCIL OF THE CITY OF FAYETTEVILLE, ARKANSAS:

Section 1: That the City Council of the City of Fayetteville, Arkansas hereby vacates and abandons the following portions of street right-of-way described in Exhibit "B" attached hereto and made a part thereof.

Section 2: That a copy of this Ordinance duly certified by the City Clerk along with the map attached and labeled Exhibit "A" shall be filed in the office of the Recorder of the County and recorded in the Deed Records of the County.

Section 3: That this vacation approval is subject to the following conditions of approval:

1. Any damage or relocation of existing facilities shall be at the owner/developer's expense.
2. Existing utility easements shall not be vacated by this ordinance.
3. New easements shall be dedicated for existing utility lines as described on the attached utility approval forms and easement plat.

PASSED and **APPROVED** this day of , 2014.

APPROVED: ATTEST:

By: _____ By: _____

LIONELD JORDAN, Mayor **SONDRA E. SMITH**, City Clerk/Treasurer

EXHIBIT 'A'
14-4753

VAC14-4753

Close Up View

RECYCLING & TRASH FACILITY

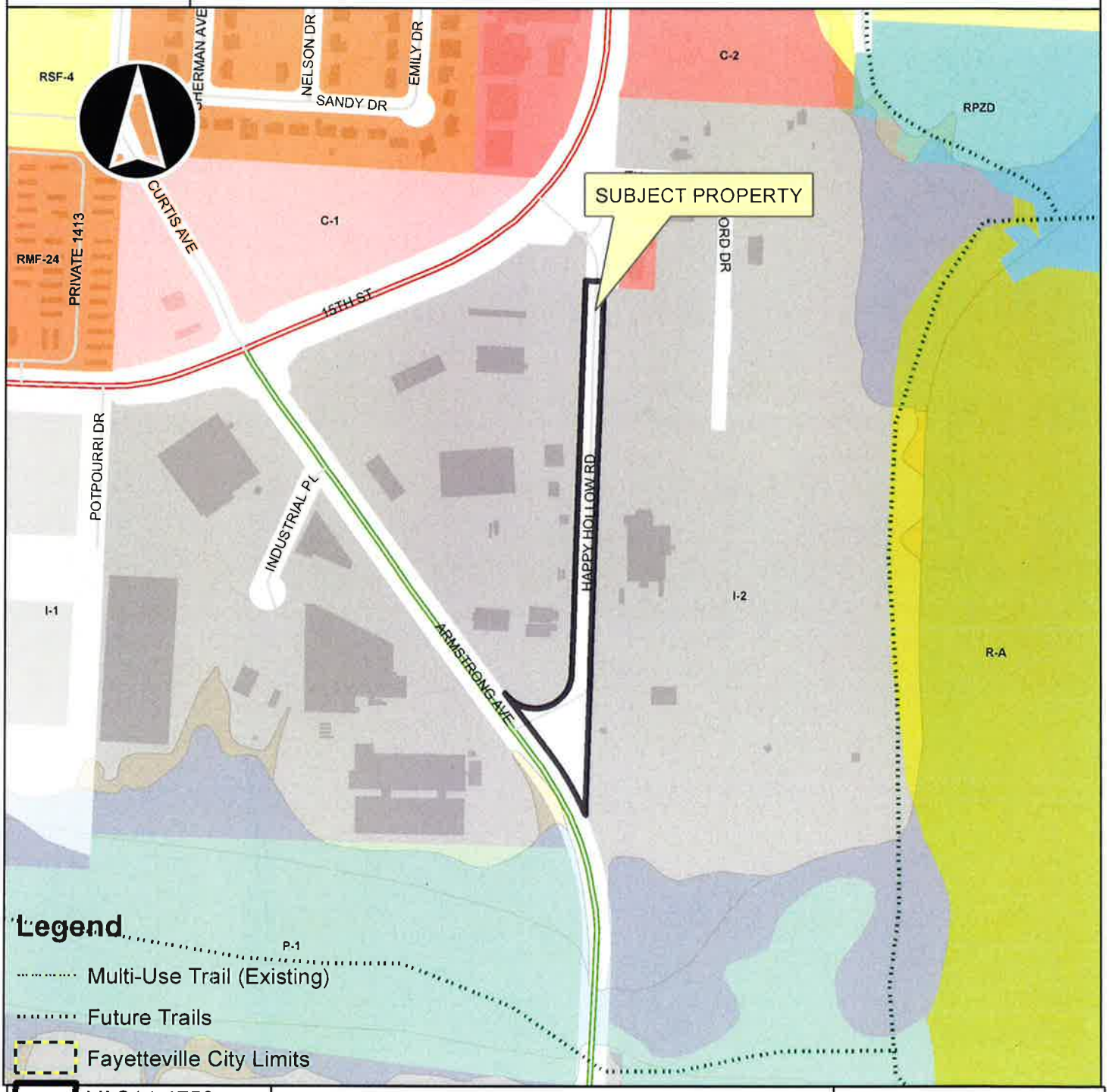

Legend

- Multi-Use Trail (Existing)
- Future Trails
- Fayetteville City Limits
- Overview VAC14-4753
- Footprints 2010
- Hillside-Hilltop Overlay District
- Design Overlay District
- Design Overlay District
- Planning Area

0 150 300 600 900 1,200 Feet

EXHIBIT 'B'
14-4753

A part of the Southwest Quarter (SW ¼) of Section 23, Township 16 North, Range 30 West in Washington County, Arkansas being more particularly described as follows: Commence at the found monument at the southwest corner of said Section 23, as shown on the plat of survey for the Final Replat of Fayetteville Industrial Park signed by Arnold D. Rankins, PS #849, dated July 20, 1995, recorded in Plat Book 14 at page 26 in the records of Washington County, Arkansas and run thence North 02° 29' 05" East along the boundary line of said survey and the west line of said Section 23 a distance of 507.05 feet; thence leaving said section line South 82° 42' 46" East along said boundary line a distance of 243.40 feet; thence North 07° 17' 16" East along said boundary line a distance of 390.00 feet; thence North 82° 42' 46" West along said boundary line a distance of 276.17 feet to said west line of said Section 23; thence North 02° 29' 05" East along said boundary line and said west line of said Section 23 a distance of 2,390.50 feet; thence leaving said west line of said Section 23 South 86° 48' 55" East along said boundary line a distance of 1,331.19 feet; thence South 03° 10' 14" West along said boundary line a distance of 139.94 feet to a point on the east line of a 50 foot wide road right of way, said road presently named South Happy Hallow Road; thence South 02° 02' 14" West along said east right of way line a distance of 151.41 feet to the "TRUE POINT OF BEGINNING" of this right of way vacation description; thence continue South 02° 02' 14" West along said east right of way line of said South Happy Hollow Road a distance of 1,450.88 feet to a point on the easterly right of way line of South Armstrong Avenue and the beginning of a curve to the left, said curve having a radius of 858.51 feet, a chord bearing of North 29° 22' 56" West, a chord distance of 180.37 feet, thence along said easterly right of way line and arc of said curve a distance of 180.76 feet; thence leaving said curve North 35° 44' 46" West along said easterly right of way line of said South Armstrong Avenue, a distance of 228.39 feet to the intersection with the west right of way line of said South Happy Hollow Road and the beginning of a curve to the left, said curve having a radius of 100.00 feet, a chord bearing of North 71° 53' 44" East, a chord distance of 183.13 feet, thence, leaving said easterly right of way line of said South Armstrong Avenue, along said west right of way line of said South Happy Hollow Road and arc of said curve a distance of 232.12 feet; thence leaving said curve North 02° 02' 14" East along said west right of way line a distance of 1,070.56 feet; thence leaving said west right of way line South 86° 05' 09" East a distance of 50.02 feet to the Point of Beginning, containing 86,929 square feet or 2.00 acres, more or less.

CITY OF Fayetteville ARKANSAS

PLANNING COMMISSION MEMO

TO: Fayetteville Planning Commission

FROM: Andrew Garner, City Planning Director
Chris Brown, City Engineer

MEETING DATE: ~~June 23, 2014~~ *Updated June 25, 2014*

SUBJECT: **VAC 14-4753: Vacation (1560 S. HAPPY HOLLOW RD./RECYCLING AND TRASH COLLECTION FACILITY, 604):** Submitted by CITY STAFF for property located at 1560 S. HAPPY HOLLOW RD. The property is zoned I-2, GENERAL INDUSTRIAL. The request is to vacate 2.0 acres of existing street right-of-way.

RECOMMENDATION:
Staff recommends forwarding **VAC 14-4753** to the City Council with a recommendation for approval.

BACKGROUND:
Property and background: The City's Transportation Division, Parks and Recreation Department, Fleet Operations, and Recycling and Trash Collection offices and storage yards are located south of 15th Street/Happy Hollow Road. The primary access into this campus is through a paved two-lane drive off of Happy Hollow Road that is gated in several places. This access drive is located within existing street right-of-way for Happy Hollow Road that is proposed to be vacated. Land use and zoning surrounding the City's campus in this area is depicted in *Table 1*.

Table 1
Surrounding Land Use and Zoning

Direction from Site	Land Use	Zoning
North	Auto repair; Metal recycling; undeveloped	C-2, Thoroughfare Commercial; I-2, General Industrial; C-1, Neighborhood Commercial
South	Undeveloped City property	I-2, General Industrial
East	Undeveloped/West Fork White River	R-A, Residential Agricultural
West	Industrial use	I-2, General Industrial

Proposal: The City requests vacation of approximately 2.0 acres of existing street right-of-way for Happy Hollow Road that bisects the City's campus, equipment and storage yards as indicated on the attached survey. This right-of-way has never been developed or utilized as a public street. This vacation is partially needed to facilitate future expansion and improvements to the City's Recycling and Trash Collection facility.

DISCUSSION:

Vacation Approval: The applicant has submitted the required vacation forms to the City utility departments and applicable franchise utilities, with no objections, provided that utility easements are retained for existing utilities. The area proposed to be vacated is surrounded entirely by property owned by the City. The northern end of the vacation area is adjacent to a private property owner, however, this section of right-of-way is not proposed to be vacated and will not affect access to this property.

UTILITIES	RESPONSE
Cox Communications	No objections with conditions
AEP/SWEPCO	No objections with conditions
Ozarks Electric	No objections with conditions
Source Gas	No objections with conditions
AT&T	No objections with conditions

CITY OF FAYETTEVILLE:	RESPONSE
Water/Sewer	No objections with conditions
Transportation	No objections
Recycling and Trash Collection	No objections

Public Comment:
No public comment has been received.

Recommendation:
Staff recommends forwarding **VAC 14-4753** to the City Council with a recommendation for approval subject to the following conditions:

Conditions of Approval:

1. Any relocation or damage to utilities shall be at the owner/developer's expense.
2. Utility easement shall be retained for existing utility lines located within the right-of-way area as required by utility providers.

PLANNING COMMISSION ACTION: Required

Date: June 23, 2014 ❒ **Tabled** √ **Forwarded** ❒ **Denied**

Motion: Cook **Second: Bunch** **Vote: 7-0-0**

CITY COUNCIL ACTION: Required

Date: _____ ❒ **Approved** ❒ **Denied**

BUDGET/STAFF IMPACT:
None

Attachments:
Request Letter
Petition to Vacate
Utility Approvals
Easement Vacation Exhibit
Aerial Photo
One Mile Map
Close Up Map

OFFICE OF THE MAYOR
LIONELD JORDAN

April 28, 2014

Mr. Andrew Garner, Planning Director
City of Fayetteville
City Administration Building
113 West Mountain
Fayetteville, Arkansas 72701

Re: Application for Street Right of Way Vacation
City of Fayetteville
MWY Project No. Fy-355

Dear Mr. Garner:

Enclosed are application materials for vacation of the right-of-way of S. Happy Hollow Road located in the Fayetteville Industrial Park. The City of Fayetteville, Arkansas owns all the properties directly adjacent to the street right-of-way.

The reason for this vacation request by the City of Fayetteville is to make it part of the entrance into their existing facility. This street right-of-way has not been used by the public as a street for many years and the public interest and welfare would not be adversely affected by the abandonment of the street right-of-way.

Thank you for your consideration of this application. If you require additional materials, please let me know.

Sincerely,

Lioneld Jordan
Mayor

PETITION

PETITION TO VACATE A STREET RIGHT-OF-WAY LOCATED IN FAYETTEVILLE INDUSTRIAL PARK CITY OF FAYETTEVILLE, ARKANSAS.

TO: The Fayetteville City Planning Commission and
The Fayetteville City Council

We, the undersigned, being all the owners of the real estate abutting the right-of-way hereinafter sought to be abandoned and vacated, lying in Fayetteville Industrial Park, City of Fayetteville, Arkansas, a municipal corporation, petition to vacate a street right-of-way which is described as follows:

A part of the Southwest Quarter (SW ¼) of Section 23, Township 16 North, Range 30 West in Washington County, Arkansas being more particularly described as follows: Commence at the found monument at the southwest corner of said Section 23, as shown on the plat of survey for the Final Replat of Fayetteville Industrial Park signed by Arnold D. Rankins, PS #849, dated July 20, 1995, recorded in Plat Book 14 at page 26 in the records of Washington County, Arkansas and run thence North 02° 29' 05" East along the boundary line of said survey and the west line of said Section 23 a distance of 507.05 feet; thence leaving said section line South 82° 42' 46" East along said boundary line a distance of 243.40 feet; thence North 07° 17' 16" East along said boundary line a distance of 390.00 feet; thence North 82° 42' 46" West along said boundary line a distance of 276.17 feet to said west line of said Section 23; thence North 02° 29' 05" East along said boundary line and said west line of said Section 23 a distance of 2,390.50 feet; thence leaving said west line of said Section 23 South 86° 48' 55" East along said boundary line a distance of 1,331.19 feet; thence South 03° 10' 14" West along said boundary line a distance of 139.94 feet to a point on the east line of a 50 foot wide road right of way, said road presently named South Happy Hallow Road; thence South 02° 02' 14" West along said east right of way line a distance of 151.41 feet to the "TRUE POINT OF BEGINNING" of this right of way vacation description; thence continue South 02° 02' 14" West along said east right of way line of said South Happy Hollow Road a distance of 1,450.88 feet to a point on the easterly right of way line of South Armstrong Avenue and the beginning of a curve to the left, said curve having a radius of 858.51 feet, a chord bearing of North 29° 22' 56" West, a chord distance of 180.37 feet, thence along said easterly right of way line and arc of said curve a distance of 180.76 feet; thence leaving said curve North 35° 44' 46" West along said easterly right of way line of said South Armstrong Avenue, a distance of 228.39 feet to the intersection with the west right of way line of said South Happy Hollow Road and the beginning of a curve to the left, said curve having a radius of 100.00 feet, a chord bearing of North 71° 53' 44" East, a chord distance of 183.13 feet, thence, leaving said easterly right of way line of said South Armstrong Avenue, along said west right of way line of said South Happy Hollow Road and arc of said curve a distance of 232.12 feet; thence leaving said curve North 02° 02' 14" East along said west right of way line a distance of 1,070.56 feet; thence leaving said west right of way line South 86° 05' 09" East a distance of 50.02 feet to the Point of Beginning, containing 86,929 square feet or 2.00 acres, more or less.

That the abutting real estate affected by said abandonment of the street right of way of S. Happy Hollow Rd. in the Fayetteville Industrial Park are parcel numbers 765-15258-000, 765-19942-000, 765-19943-000, 765-19941-000 and 765-19940-000 which are all owned by the City of Fayetteville and has not been used by the public as a street for a period of many years, only as an entrance into the City of Fayetteville's Facilities and that the public interest and welfare would not be adversely affected by the abandonment of the portion of the above described street right of way.

The petitioners pray that the City of Fayetteville, Arkansas, abandon and vacate the above described real estate, subject, however, to the existing utility easements and sewer easements as required, and that the above described real estate be used for their respective benefit and purpose as now approved by law.

The petitioners further pray that the above described real estate by vested in the abutting property owners as provided by law.

WHEREFORE, the undersigned petitioners respectfully pray that the governing body of the City of Fayetteville, Arkansas, abandon and vacate the above described real estate, subject to said utility and sewer easements, and that title to said real estate sought to be abandoned be vested in the abutting property owners as provided by law, and as to that particular land the owners be free from the easements of the public for the use of said alley.

Dated this 8th day of May, 2014.

Lionel Jordan
Printed Name

Lionel Jordan
Signature

Printed Name

Signature

UTILITY APPROVAL FORM

FOR RIGHT- OF- WAY, ALLEY, AND UTILITY EASEMENT VACATIONS

DATE: April 23, 2014

UTILITY COMPANY: Cox Communications

APPLICANT NAME: City of Fayetteville, AR APPLICANT PHONE: _____

REQUESTED VACATION (***applicant must check all that apply***):

☐ Utility Easement

☐ Right-of-way for alley or streets and all utility easements located within the vacated right- of- way.

☐ Alley

☒ Street right-of-way

I have been notified of the petition to vacate the following (*alley, easement, right-of-way*), described as follows:

General location / Address 1560 S. Happy Hollow Road
Fayetteville, AR

SEE ATTACHED SURVEY

☐ ***(ATTACH legal description and graphic representation of what is being vacated-SURVEY)***

UTILITY COMPANY COMMENTS:

☐ No objections to the vacation(s) described above, and no comments.

☒ No objections to the vacation(s) described above, provided following described easements are retained. (State the location, dimensions, and purpose below.)

We have existing aerial facilites along both sides of this road, including Ringed fiber for the City of Fayetteville. These facilities need to remain within a utility easement.

☒ No objections provided the following conditions are met:
Any damage to or relocation of existing facilites will be at the owners/developers expense.

Chad L. Koop
Signature of Utility Company Representative

Construction Planner III NWA
Title

UTILITY APPROVAL FORM

FOR RIGHT- OF- WAY, ALLEY, AND UTILITY EASEMENT VACATIONS

DATE: April 23, 2014

UTILITY COMPANY: AEP/SWEPCO

APPLICANT NAME: City of Fayetteville, AR APPLICANT PHONE: _____

REQUESTED VACATION (*applicant must check all that apply*):

☐ Utility Easement

☐ Right-of-way for alley or streets and all utility easements located within the vacated right- of- way.

☐ Alley

☒ Street right-of-way

I have been notified of the petition to vacate the following (*alley, easement, right-of-way*), described as follows:

General location / Address 1560 S. Happy Hollow Road
Fayetteville, AR

SEE ATTACHED SURVEY

☐ *(ATTACH legal description and graphic representation of what is being vacated-SURVEY)*

UTILITY COMPANY COMMENTS:

☐ No objections to the vacation(s) described above, and no comments.

☐ No objections to the vacation(s) described above, provided following described easements are retained. (State the location, dimensions, and purpose below.)

☑ No objections provided the following conditions are met:
Provide a 20' U.E. centered on existing overhead line near the western edge of ROW

Signature of Utility Company Representative

Dist. Engineer
Title

UTILITY APPROVAL FORM

FOR RIGHT- OF- WAY, ALLEY, AND UTILITY EASEMENT VACATIONS

DATE: April 23, 2014

UTILITY COMPANY: Ozarks Electric

APPLICANT NAME: City of Fayetteville, AR APPLICANT PHONE:

REQUESTED VACATION (***applicant must check all that apply***):

☐ Utility Easement

☐ Right-of-way for alley or streets and all utility easements located within the vacated right- of- way.

☐ Alley

☒ Street right-of-way

I have been notified of the petition to vacate the following (*alley, easement, right-of-way*), described as follows:

General location / Address 1560 S. Happy Hollow Road
Fayetteville, AR

SEE ATTACHED SURVEY

☐ ***(ATTACH legal description and graphic representation of what is being vacated-SURVEY)***

UTILITY COMPANY COMMENTS:

☐ No objections to the vacation(s) described above, and no comments.

☒ No objections to the vacation(s) described above, provided following described easements are retained. (State the location, dimensions, and purpose below.)

Ozarks Electric has an existing three phase overhead line in the area. The 30 foot electric easement will need to remain intact.

☐ No objections provided the following conditions are met:

Greg McGee
Signature of Utility Company Representative

Lead Staking Tech
Title

UTILITY APPROVAL FORM

FOR RIGHT- OF- WAY, ALLEY, AND UTILITY EASEMENT VACATIONS

DATE: April 23, 2014

UTILITY COMPANY: [redacted] Source Gas

APPLICANT NAME: City of Fayetteville, AR APPLICANT PHONE: _____

REQUESTED VACATION (*applicant must check all that apply*):

☐ Utility Easement

☐ Right-of-way for alley or streets and all utility easements located within the vacated right- of- way.

☐ Alley

☒ Street right-of-way

I have been notified of the petition to vacate the following (*alley, easement, right-of-way*), described as follows:

General location / Address 1560 S. Happy Hollow Road
Fayetteville, AR

SEE ATTACHED SURVEY

☐ *(ATTACH legal description and graphic representation of what is being vacated-SURVEY)*

UTILITY COMPANY COMMENTS:

☐ No objections to the vacation(s) described above, and no comments.

☐ No objections to the vacation(s) described above, provided following described easements are retained. (State the location, dimensions, and purpose below.)

☒ No objections provided the following conditions are met:
Need large Scale Development Plan to Show Utility Easements, instead our Gas Lines Currently lay.

Brian A. Dunfort
Signature of Utility Company Representative

Supervisor- Fay. Division
Title

UTILITY APPROVAL FORM

FOR RIGHT- OF- WAY, ALLEY, AND UTILITY EASEMENT VACATIONS

DATE: April 23, 2014

UTILITY COMPANY: AT&T

APPLICANT NAME: City of Fayetteville, AR APPLICANT PHONE

REQUESTED VACATION (*applicant must check all that apply*):

☐ Utility Easement

☐ Right-of-way for alley or streets and all utility easements located within the vacated right- of- way.

☐ Alley

☒ Street right-of-way

I have been notified of the petition to vacate the following (*alley, easement, right-of-way*), described as follows:

General location / Address 1560 S. Happy Hollow Road
Fayetteville, AR

SEE ATTACHED SURVEY

☐ ***(ATTACH legal description and graphic representation of what is being vacated-SURVEY)***

UTILITY COMPANY COMMENTS.

☐ No objections to the vacation(s) described above, and no comments.

☒ No objections to the vacation(s) described above, provided following described easements are retained (State the location, dimensions, and purpose below.)

Need to retain the easement paralleling Armstrong at Intersection of Happy Hollow Rd
Fiber optic cable in current easement/ ROW.

☐ No objections provided the following conditions are met:

Signature of Utility Company Representative

Manager OSP Planning & Engineering Design
Title

UTILITY APPROVAL FORM

FOR RIGHT- OF- WAY, ALLEY, AND UTILITY EASEMENT VACATIONS

DATE: April 23, 2014

UTILITY COMPANY. City of Fayetteville WATER & SEWER

APPLICANT NAME: City of Fayetteville, AR APPLICANT PHONE:

REQUESTED VACATION (***applicant must check all that apply***):

☐ Utility Easement

☐ Right-of-way for alley or streets and all utility easements located within the vacated right- of- way.

☐ Alley

☒ Street right-of-way

I have been notified of the petition to vacate the following (*alley, easement, right-of-way*), described as follows:

General location / Address 1560 S. Happy Hollow Road
Fayetteville, AR

SEE ATTACHED SURVEY

(ATTACH legal description and graphic representation of what is being vacated-SURVEY)

UTILITY COMPANY COMMENTS:

☐ No objections to the vacation(s) described above, and no comments.

☒ No objections to the vacation(s) described above, provided following described easements are retained. (State the location, dimensions, and purpose below.)

STILL NEED EASEMENTS FOR THE 6 SEWER LINES AND 2 WATER LINES THAT ARE IN THE AREA.

☐ No objections provided the following conditions are met:

Signature of Utility Company Representative

INTERIM UTILITY DIRECTOR
Title

UTILITY APPROVAL FORM

FOR RIGHT- OF- WAY, ALLEY, AND UTILITY EASEMENT VACATIONS

DATE: April 23, 2014

UTILITY COMPANY: City of Fayetteville Transportation

APPLICANT NAME: City of Fayetteville, AR APPLICANT PHONE: _____

REQUESTED VACATION (***applicant must check all that apply***):

☐ Utility Easement

☐ Right-of-way for alley or streets and all utility easements located within the vacated right- of- way.

☐ Alley

☒ Street right-of-way

I have been notified of the petition to vacate the following (*alley, easement, right-of-way*), described as follows:

General location / Address 1560 S. Happy Hollow Road
Fayetteville, AR

SEE ATTACHED SURVEY

☐ ***(ATTACH legal description and graphic representation of what is being vacated-SURVEY)***

UTILITY COMPANY COMMENTS:

☑ No objections to the vacation(s) described above, and no comments.

☐ No objections to the vacation(s) described above, provided following described easements are retained. (State the location, dimensions, and purpose below.)

_____

_____

☐ No objections provided the following conditions are met:

_____

_____

Terry L Hulley
Signature of Utility Company Representative

Trans Services Dir
Title

UTILITY APPROVAL FORM

FOR RIGHT- OF- WAY, ALLEY, AND UTILITY EASEMENT VACATIONS

DATE: April 23, 2014

UTILITY COMPANY: City of Fayetteville Solid Waste

APPLICANT NAME: City of Fayetteville, AR APPLICANT PHONE:

REQUESTED VACATION (***applicant must check all that apply***):

☐ Utility Easement

☐ Right-of-way for alley or streets and all utility easements located within the vacated right- of- way.

☐ Alley

☒ Street right-of-way

I have been notified of the petition to vacate the following (*alley, easement, right-of-way*), described as follows:

General location / Address 1560 S. Happy Hollow Road
Fayetteville, AR

SEE ATTACHED SURVEY

☐ ***(ATTACH legal description and graphic representation of what is being vacated-SURVEY)***

UTILITY COMPANY COMMENTS:

☒ No objections to the vacation(s) described above, and no comments.

☐ No objections to the vacation(s) described above, provided following described easements are retained. (State the location, dimensions, and purpose below.)

☐ No objections provided the following conditions are met:

Signature of Utility Company Representative

Waste Reduction Coordinator
Title

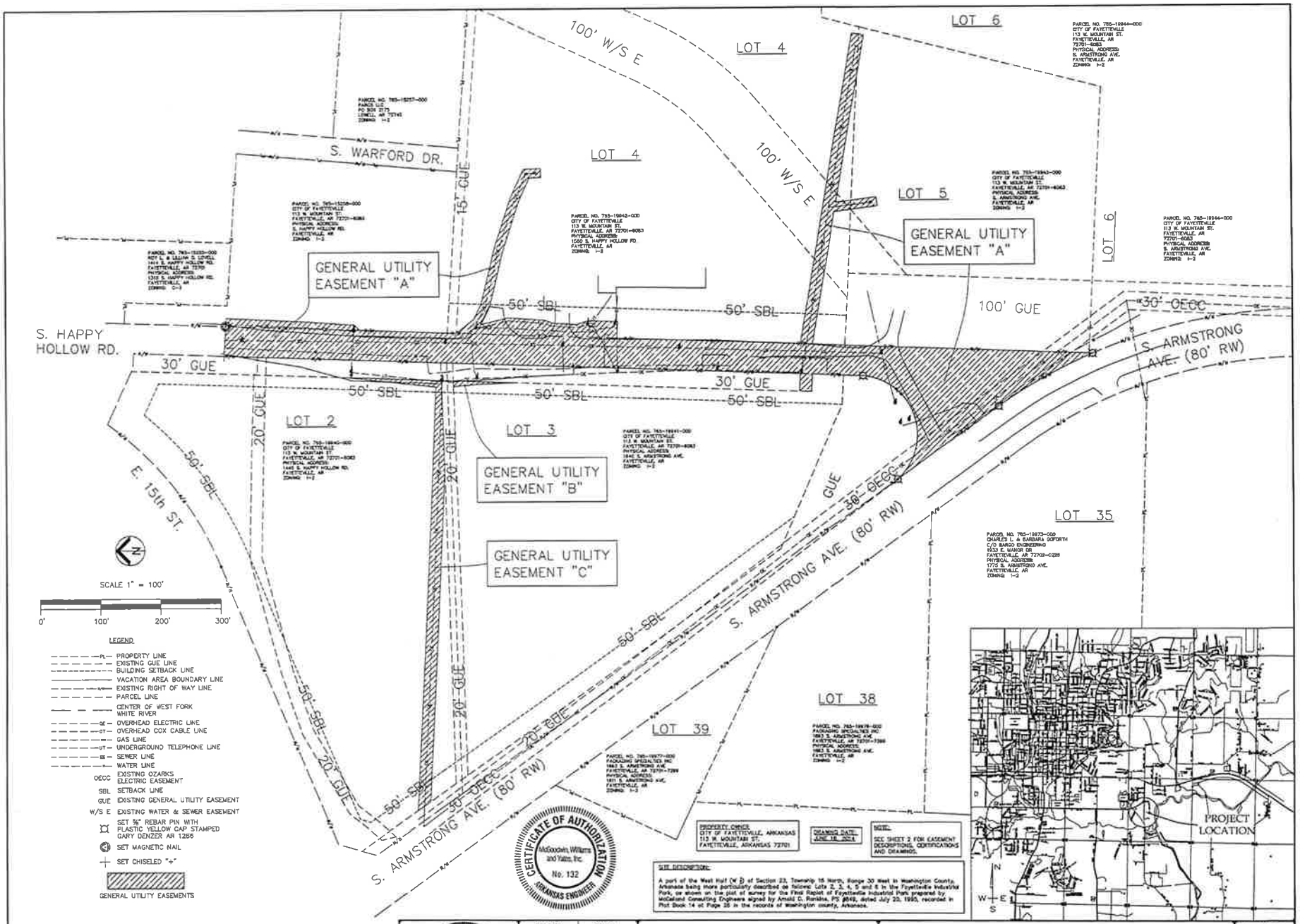

CERTIFICATION: This is to certify that this plat represents a survey conducted by me of the property shown to the best of my ability. I confirmed the correctness of prior monuments and supervised the survey and the setting of new monuments. The survey and plat conform to the Arkansas Standards of Practice for Boundary Surveys and Plats. This plat is for the use of the City of Fayetteville, Arkansas – any warranties, express or implied are so limited. Third parties shall consult with me before relying on the dimensions shown hereon.

GARY L. DENZER, PS 1266, June, 2014, McGOODWIN, WILLIAMS, & YATES, CONSULTING ENGINEERS
302 E. MILLSAP RD., FAYETTEVILLE, AR 72703
MWY CODE: FY-355V 231630 0614 GD
STATE SURVEYORS CODE: 500-16N-30W-0-23-300-72-1266

REGISTERED STATE OF ARKANSAS NO. 1266 GARY LEE DENZER PROFESSIONAL LAND SURVEYOR 6-16-14

DESIGNED	DRAWN
GLD	GLD
CHECKED	
GLD	
PLANS NO.	
FY-355E	

McGoodwin Williams & Yates
Engineering Confidence
Fayetteville, Arkansas

FAYETTEVILLE SOLID WASTE
TRANSFER STATION EXPANSION
FAYETTEVILLE, ARKANSAS

GENERAL UTILITY
EASEMENT PLAT
FAYETTEVILLE, ARKANSAS

STRUCTURE NO.

SHEET NO.
1/2

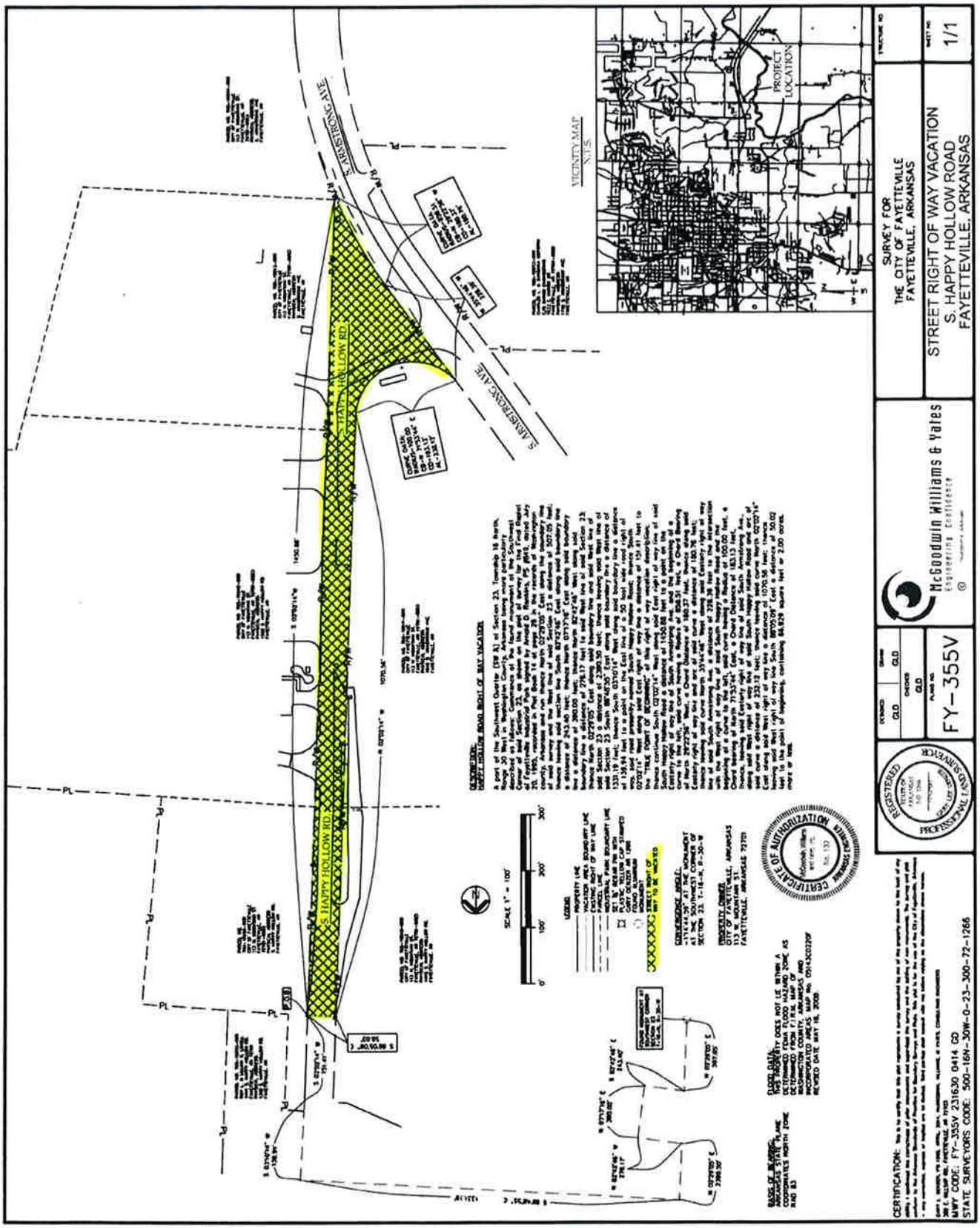
S. HAPPY HOLLOW RD.
S. ARKANSAS AVE.
VICINITY MAP
N.T.S.
PROJECT LOCATION
SURVEY FOR
THE CITY OF FAYETTEVILLE
FAYETTEVILLE, ARKANSAS
STREET RIGHT OF WAY VACATION
S. HAPPY HOLLOW ROAD
FAYETTEVILLE, ARKANSAS
1/1
McGoodwin Williams & Yates
Engineering Consultants
FY-355V
CERTIFICATION:
STATE SURVEYORS CODE: 500-16N-30W-0-23-300-72-1266

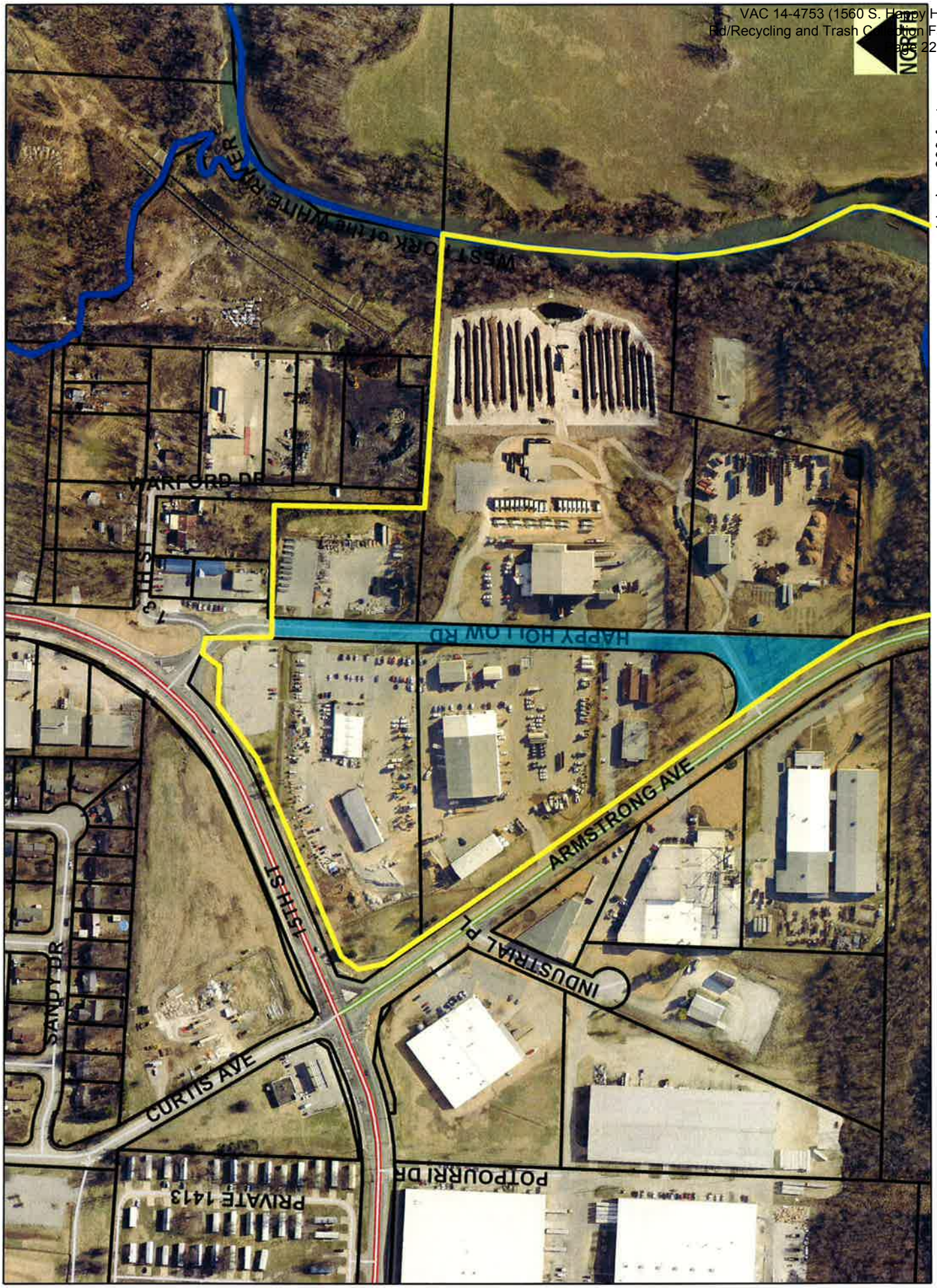
WEST FORK of the WHITE RIVER
WARFORD DR
HAPPY HOLLOW RD
ARMSTRONG AVE
INDUSTRIAL PL
I-5 HIGH
SANDY DR
CURTIS AVE
POTPOURRI DR
PRIVATE 1413
NORTH
0 75 150 300 450 600 Feet
1 inch = 300 feet
Right-of-way vacation area
City-owned property

VAC14-4753

One Mile View

RECYCLING AND TRASH FACILITY

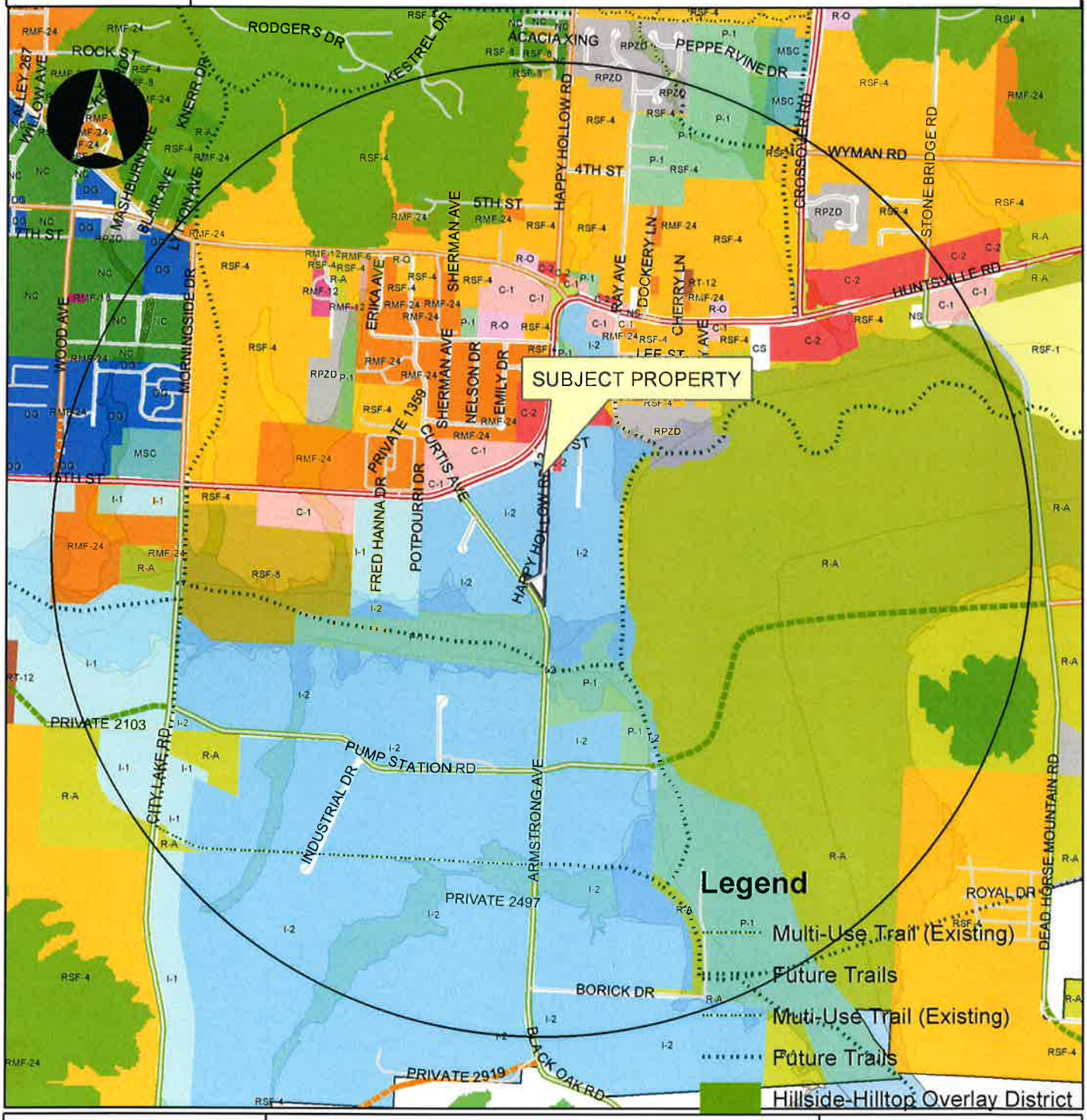

Overview

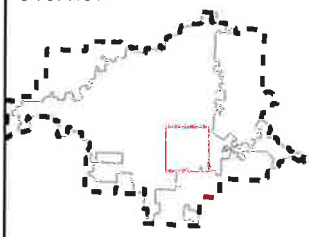

Legend

Subject Property

VAC14-4753

Boundary

VAC14-4753

Design Overlay District

Planning Area

Fayetteville

0 0.25 0.5 1 Miles

VAC14-4753

Close Up View

RECYCLING & TRASH FACILITY

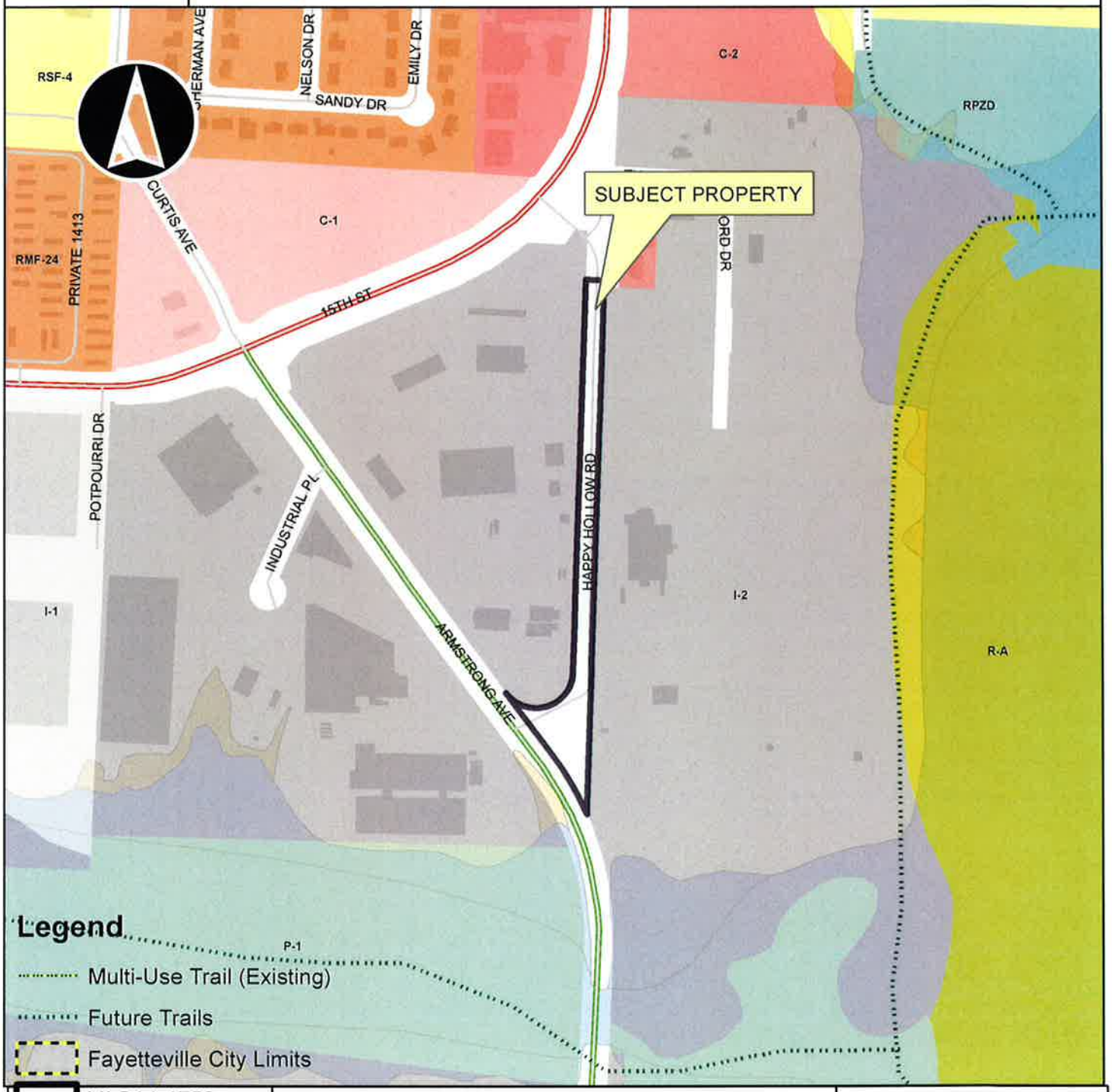

City of Fayetteville Item Review Form

2014-0275

Legistar File Number

07/15/2014

City Council Meeting Date - Agenda Item Only

N/A for Non-Agenda Item

Jeremy Pate

Submitted By

Development Services

Department

Action Required:

Approval of a Contract Amendment with Baldwin & Shell for construction phase services of the Spring Street Municipal Parking Deck, to include site preparation, demolition and mass excavation only.

Does this item have a cost? Yes

	$6,639,754.60	Spring St. Parking Deck
Cost of this request	Category or Project Budget	Program or Project Name
4560.9560.5804.00	$1,225,228.95	Building Costs
Account Number	Funds Used to Date	Program or Project Category
11028.1203	$5,414,525.65	Parking Deck Project Expenses
Project Number	Remaining Balance	Fund Name

Budgeted Item? Yes

Budget Adjustment Attached?

V20130812

ENTERED 6-26-14 DM

ENTERED 6/30/14 PH

Previous Ordinance or Resolution # 87-13

Original Contract Number:

Comments:

Chris for Jeremy Pate

Paul A. Becker 7-1-2014

Dan Mann 7-1-14

CITY OF Fayetteville ARKANSAS

CITY COUNCIL AGENDA MEMO

MEETING OF JULY 15, 2014

TO: Mayor and City Council

THRU: Don Marr, Chief of Staff

FROM: Jeremy Pate, Development Services Director

DATE: June 19, 2014

SUBJECT: **Spring Street Parking Deck-Amendment to the Contract with Baldwin and Shell for Site Preparation, Demolition, and Mass Excavation**

RECOMMENDATION:
Staff recommends approval of a resolution to approve a contract amendment with Baldwin and Shell in the amount of $_____ for construction phase services related to demolition of the Walton Arts Center Administration offices and excavation for the Spring Street Parking Deck.

BACKGROUND:
The City of Fayetteville is constructing a parking deck in the downtown area/entertainment district on the northwest corner of School Avenue and Spring Street, adjacent to and southeast of the Walton Arts Center (WAC) facility. The objective is to relieve current parking shortfalls and to create supply in an area anticipated to see increased parking demand.

Garver, LLC has led the design team for engineering and architectural services thus far on the project, coordinating with the City's team and in collaboration with the WAC and Boora Architects. Site Selection, Preliminary Design, Schematic Design and Project Development have all been completed, and final construction documents for the parking deck were delivered to Baldwin and Shell for advertising and bidding purposes in mid-June. In order to coordinate with the schedule of the design team for the Walton Arts Center, staff has created two phases of the project, with the first being Demolition and Excavation and the second being the balance of the project. We believe this will create some efficiencies and allow the project to begin earlier with necessary demolition and excavation for the parking deck.

Baldwin and Shell was selected in April of 2013 to provided professional construction management services for this project. Services under the selection cover both preconstruction and construction phases of the work for the parking deck. A preconstruction phase service contract in the amount of $40,000 was awarded at that time, with the objective of providing the design team with detailed contractor perspective input, including cost estimating at various points of in the design process. It has been through this estimating service that the design team has been able to make informed design decisions to reduce cost in the overall project from initial estimates. The Construction Manager's fee of 5.5% of the construction cost was set in the initial contract, although the actual dollar amount cannot be identified until all bids are received.

Upon completion of all design work and when bids are received, a Guaranteed Maximum Price will be established, determined based upon the publicly opened bids received from subcontractors.

This request is for an amendment to the original contract to actually perform the first phase of construction, encompassing demolition and excavation. A change order establishing the final Guaranteed Maximum Price will come forward once all other bids for the full project are received and final costs are negotiated.

DISCUSSION:
As staff has updated the Council on several occasions, cost estimates have consistently been higher than our initial budget established with the parking revenue bonds. There has been much time and effort put into cost estimating, design changes and overall systems evaluation to provide a project that meets the expectations of all involved. Staff has taken the input given from the Council and designed the deck structure to incorporate liner buildings at the south and east corners, in addition to the liner building along the north side of the deck that will house the Walton Arts Center offices and back-of-house space. We were able to accomplish most, but not all, requests of the Council, as we have discussed previously. The exterior elements that create the architectural interest of the façade have only been improved, and our value engineering and design changes have focused on structural and interior systems and elements.

When the full project has been bid and we understand what actual costs will be, the mayor and staff will present to the Council the range of funding options necessary to fund the project in full, if bid are indeed higher than the current budget as I reported to you that we anticipate at our last project budget update. The team has been able to reduce the cost by approximately $800,000 since that time, and we anticipate a bid day reduction as well. Ultimately we will consult with the City Council to determine our best options in providing this important piece of infrastructure for the future growth of our downtown cultural and arts entertainment area. With the final project bids will also be a contractual agreement with the Walton Arts Center for their share of the project being constructed.

At this time staff is requesting the Council approve a contract amendment to allow for demolition and excavation, understanding that these are necessary construction items to begin the project.

BUDGET/STAFF IMPACT:
Funding for this first amendment of the contract is coming from parking revenue bond proceeds and parking funds budgeted for the project.

Attachments:
Draft Contract Amendment (AIA Document A133 Exhibit A)
Purchase Order Request
Resolution 87-13

RESOLUTION NO. _____

A RESOLUTION TO AUTHORIZE AN AMENDMENT TO THE CONTRACT WITH BALDWIN & SHELL CONSTRUCTION COMPANY FOR DEMOLITION AND MASS EXCAVATION SERVICES FOR THE SPRING STREET PARKING DECK

BE IT RESOLVED BY THE CITY COUNCIL OF THE CITY OF FAYETTEVILLE, ARKANSAS:

Section 1. That the City Council of the City of Fayetteville, Arkansas hereby authorizes an amendment to the contract with Baldwin & Shell Construction Company for demolition of the Walton Arts Center Administration offices and excavation of the site for the Spring Street Parking Deck.

PASSED and **APPROVED** this 15th day of July, 2014.

APPROVED:

By: _____
LIONELD JORDAN, Mayor

ATTEST:

By: _____
SONDRA E. SMITH, City Clerk/Treasurer

NOTICE TO BIDDERS

Sealed bids will be received on the Site Preparation, Demolition and Earthwork package for the SPRING STREET PARKING DECK in FAYETTEVILLE, ARKANSAS. The Construction Manager/General Contractor, Baldwin & Shell Construction Company, will receive sealed bids in **the conference room of Garver located at 2049 E. Joyce Blvd., Suite 400, Fayetteville, Arkansas 72703.** Bids shall be submitted before 2:00:00 pm, local time on Tuesday, July 8, 2014. Bids received after this time will not be accepted. Bids will be opened and read aloud immediately following the deadline.

Bidders are instructed to review the Supplemental Information for Bidders furnished by the Construction Manager for a complete description of the bid package.

Obtaining contract documents through any source other than the Construction Manager or their representative(s) is not advisable due to the risks of receiving incomplete or inaccurate information. Contract documents obtained through the Construction Manager or their representative(s) are considered the official versions and take precedence should any discrepancies occur. The official version of the complete set of the contract documents should be examined and are obtainable from Baldwin & Shell Construction Company, 593 Horsebarn Road, Ste. 100, Rogers, Arkansas 72758 (Phone: 479-845-1111; Fax : 479-845-1115) or Baldwin & Shell Construction Company, 1000 West Capitol, Little Rock, Arkansas 72201 (Phone: 501-374-8677; Fax : 501-375-7649).

All Bid Proposals shall be submitted on a copy of the Bid Form provided in the Supplementary Information Packet. Bidders may photocopy these forms. The entire manual does not need to be submitted with the bids. Faxed Bid Proposals and Email Quotes will not be accepted.

A 5% Bid Bond or Cashier's Check is required on bids that exceed $20,000. Bids must include the cost of Performance Bond and Payment Bond. Successful bidders will be required to furnish the Performance Bond and Payment Bond on Baldwin & Shell Construction standard bond forms of which samples are provided in the Supplemental Information for Bidders.

Attention is called to the fact that the minimum prevailing wage rates for each craft or type of worker and the prevailing wage rate for overtime work as determined by the Arkansas Department of Labor shall be paid with a contract awarded amount of $75,000.00 or more.

Bidders shall conform to the requirements of the Arkansas licensing laws and regulations for contractors, and shall be licensed before a bid is submitted.

Both the Owner and Construction Manager reserve the right to reject any and all bids, and to waive any formalities.

Baldwin & Shell Construction Co.
Construction Manager/General
Contractor
593 HORSEBARN ROAD, SUITE 100
ROGERS, Arkansas 72758
Ad Dates: 06/23/14 and 06/30/14

BALDWIN & SHELL
CONSTRUCTION COMPANY

June 19, 2014

Jeremy Pate
City of Fayetteville
113 West Mountain
Fayetteville, AR 72701

Re: Spring Street Parking Deck

Dear Jeremy,

Enclosed you will find a draft of A133 Exhibit A pertaining to the Site Preparation, Demolition, and Mass Excavation package of the Spring Street Parking Deck. The Attachments A, B, C, and D referenced in the document will be attached to the final document which will be prepared at the conclusion of the procurement process.

If you have any questions please do not hesitate to contract me.

Respectfully,
BALDWIN & SHELL CONSTRUCTION COMPANY

Patrick Tenney, AIA | President
Northwest Arkansas Division

Enclosures

PT/lf

AIA® Document A133™ – 2009 Exhibit A

Guaranteed Maximum Price Amendment

for the following PROJECT:
(Name and address or location)

Site Preparation, Demolition, and Mass Excavation Package for the
Spring Street Parking Deck
229 North School Avenue
Fayetteville, AR 72701

THE OWNER:
(Name, legal status and address)

City of Fayetteville
113 West Mountain
Fayetteville, Arkansas 72701

THE CONSTRUCTION MANAGER:
(Name, legal status and address)

Baldwin & Shell Construction Company
593 Horsebarn Road, Suite 100
Rogers, AR 72758

ADDITIONS AND DELETIONS:
The author of this document has added information needed for its completion. The author may also have revised the text of the original AIA standard form. An *Additions and Deletions Report* that notes added information as well as revisions to the standard form text is available from the author and should be reviewed. A vertical line in the left margin of this document indicates where the author has added necessary information and where the author has added to or deleted from the original AIA text.

This document has important legal consequences. Consultation with an attorney is encouraged with respect to its completion or modification.

AIA Document A201™–2007, General Conditions of the Contract for Construction, is adopted in this document by reference. Do not use with other general conditions unless this document is modified.

ARTICLE A.1
§ A.1.1 Guaranteed Maximum Price
Pursuant to Section 2.2.6 of the Agreement, the Owner and Construction Manager hereby amend the Agreement to establish a Guaranteed Maximum Price. As agreed by the Owner and Construction Manager, the Guaranteed Maximum Price is an amount that the Contract Sum shall not exceed. The Contract Sum consists of the Construction Manager's Fee plus the Cost of the Work, as that term is defined in Article 6 of this Agreement.

§ A.1.1.1 The Contract Sum is guaranteed by the Construction Manager not to exceed ($), subject to additions and deductions by Change Order as provided in the Contract Documents.

§ A.1.1.2 Itemized Statement of the Guaranteed Maximum Price. Provided below is an itemized statement of the Guaranteed Maximum Price organized by trade categories, allowances, contingencies, alternates, the Construction Manager's Fee, and other items that comprise the Guaranteed Maximum Price.
(Provide below or reference an attachment.)

Refer to Attachment "B"

§ A.1.1.3 The Guaranteed Maximum Price is based on the following alternates, if any, which are described in the Contract Documents and are hereby accepted by the Owner:
(State the numbers or other identification of accepted alternates. If the Contract Documents permit the Owner to accept other alternates subsequent to the execution of this Amendment, attach a schedule of such other alternates showing the amount for each and the date when the amount expires.)

None

AIA Document A133™ – 2009 Exhibit A. Copyright © 1991, 2003 and 2009 by The American Institute of Architects. **All rights reserved.** WARNING: This AIA® Document is protected by U.S. Copyright Law and International Treaties. Unauthorized reproduction or distribution of this AIA® Document, or any portion of it, may result in severe civil and criminal penalties, and will be prosecuted to the maximum extent possible under the law. This document was produced by AIA software at 15:05:54 on 06/19/2014 under Order No.2266540055_1 which expires on 05/22/2015, and is not for resale.
User Notes: (1264078959)

§ **A.1.1.4** Allowances included in the Guaranteed Maximum Price, if any:
(Identify allowance and state exclusions, if any, from the allowance price.)
Refer to Attachment "A".

(Table deleted)
§ **A.1.1.5** Assumptions, if any, on which the Guaranteed Maximum Price is based:
Refer to Attachment "B".

§ **A.1.1.6** The Guaranteed Maximum Price is based upon the following Supplementary and other Conditions of the Contract:

Document	Title	Date	Pages

§ **A.1.1.7** The Guaranteed Maximum Price is based upon the following Specifications:
(Either list the Specifications here, or refer to an exhibit attached to this Agreement.)
Refer to Attachment "C".

(Table deleted)
§ **A.1.1.8** The Guaranteed Maximum Price is based upon the following Drawings:
(Either list the Drawings here, or refer to an exhibit attached to this Agreement.)
Refer to Attachment "D".

(Table deleted)
§ **A.1.1.9** The Guaranteed Maximum Price is based upon the following other documents and information:
(List any other documents or information here, or refer to an exhibit attached to this Agreement.)
Refer to Attachment "A".

ARTICLE A.2
§ **A.2.1** The anticipated date of Substantial Completion established by this Amendment:
will be established in a Notice to Proceed

CITY OF FAYETTEVILLE *(Signature)*	**BALDWIN & SHELL CONSTRUCTION COMPANY** *(Signature)*
Lioneld Jordan, Mayor *(Printed name and Title)*	Patrick Tenney, AIA, President *(Printed name and Title)*
ATTEST:	**ATTEST:**
Sandra Smith, City Clerk	Leslie Fann, Administrative Assistant

Init.
/
AIA Document A133™ – 2009 Exhibit A. Copyright © 1991, 2003 and 2009 by The American Institute of Architects. **All rights reserved. WARNING: This AIA® Document is protected by U.S. Copyright Law and International Treaties. Unauthorized reproduction or distribution of this AIA® Document, or any portion of it, may result in severe civil and criminal penalties, and will be prosecuted to the maximum extent possible under the law.** This document was produced by AIA software at 15:05:54 on 06/19/2014 under Order No.2266540055_1 which expires on 05/22/2015, and is not for resale.
User Notes: (1264078959)

RESOLUTION NO. 87-13

A RESOLUTION AUTHORIZING A CONTRACT WITH BALDWIN & SHELL CONSTRUCTION COMPANY IN THE AMOUNT OF $40,000.00 FOR CONSTRUCTION MANAGEMENT SERVICES, APPROVING A $10,000.00 CONTINGENCY, AND APPROVING A CONTRACTOR'S FEE OF FIVE AND ONE-HALF PERCENT (5.5%) FOR CONSTRUCTION PHASED SERVICES ALL RELATED TO CONSTRUCTION OF THE DICKSON STREET ENTERTAINMENT DISTRICT PARKING FACILITY

BE IT RESOLVED BY THE CITY COUNCIL OF THE CITY OF FAYETTEVILLE, ARKANSAS:

Section 1. That the City Council of the City of Fayetteville, Arkansas hereby authorizes a contract with Baldwin & Shell Construction Company in the amount of $40,000.00 for construction management services, approves a $10,000.00 contingency, and approves a contractor's fee of five and one-half percent (5.5%) for construction phased services, all related to construction of the Dickson Street Entertainment District parking facility.

PASSED and **APPROVED** this 16th day of April, 2013.

APPROVED:

By: Lionel Jordan
LIONELD JORDAN, Mayor

ATTEST:

By: Sondra E. Smith
SONDRA E. SMITH, City Clerk/Treasurer

CITY CLERK / TREASURER
CITY OF
FAYETTEVILLE
ARKANSAS
WASHINGTON COUNTY

Fayetteville ARKANSAS
www.accessfayetteville.org

CITY COUNCIL AGENDA MEMO
MEETING DATE OF APRIL 16, 2013
THE CITY OF FAYETTEVILLE, ARKANSAS

To: Fayetteville City Council

Thru: Mayor Lioneld Jordan
Don Marr, Chief of Staff

From: David Jurgens, Utilities Director

Date: March 29, 2013

Subject: Baldwin & Shell Parking Facility Construction Management Contract for $40,000

RECOMMENDATION

City Staff recommends approving a contract with Baldwin & Shell Construction Company, for $40,000, for construction management services for the Entertainment District parking facility with liner buildings, approving a $10,000 contingency, and approving a contractor's fee of 5.5% for construction phased services. The actual dollar cost of this fee will be determined when the specific construction cost is determined.

BACKGROUND

The City of Fayetteville is constructing a parking deck in the entertainment district, specifically on the northwest corner of School Avenue and Spring Street, adjacent to and southeast of the Walton Arts Center (WAC) facility. The objective is to relieve current parking shortfalls and allow for meeting increased parking demand in the area. The deck is expected to contain roughly 246 spaces. The Engineering and Architecture team led by Garver engineers is currently executing the parking deck design, in coordination with the City's team and collaboration with the Walton Arts Center and Boora Architects. The project includes removal and replacement of the existing WAC administration building.

DISCUSSION

A request for qualifications for professional construction management services was published in February, 2013; ten statements of qualification (SOQ) were received. The selection committee, which included Alderman Gray and a representative from the Walton Arts Center, reviewed the SOQs and interviewed four firms, ultimately selecting Baldwin & Shell. Services under this selection will cover both preconstruction and construction phases of work for the Entertainment District parking deck

This specific contract is for preconstruction phase services, with the objective of providing the design team with detailed contractor perspective input, specifically relating to constructability and construction cost estimating. The Construction Manager's fee of 5.5% of the construction cost is set in this initial contract, although the actual dollar cost cannot be identified until bids are received. The $40,000 counts towards and is part of the 5.5%. Upon completion of the design, the next phase of work – construction with a Guaranteed Maximum Price – will be determined based on the publicly opened bids received from subcontractors. An amendment to this contract is intended to be awarded to actually perform the construction.

BUDGET IMPACT

Funding is available within the project 11028, sourced from a combination of revenue bonds and parking funds. It is possible there will be a cost share from the Walton Arts Center.

AIA® Document A133™ – 2009

Standard Form of Agreement Between Owner and Construction Manager as Constructor where the basis of payment is the Cost of the Work Plus a Fee with a Guaranteed Maximum Price

ADDITIONS AND DELETIONS:
The author of this document has added information needed for its completion. The author may also have revised the text of the original AIA standard form. An *Additions and Deletions Report* that notes added information as well as revisions to the standard form text is available from the author and should be reviewed. A vertical line in the left margin of this document indicates where the author has added necessary information and where the author has added to or deleted from the original AIA text.

This document has important legal consequences. Consultation with an attorney is encouraged with respect to its completion or modification.

AIA Document A201™–2007, General Conditions of the Contract for Construction, is adopted in this document by reference. Do not use with other general conditions unless this document is modified.

AGREEMENT made as of the 16th day of April in the year 2013
(In words, indicate day, month and year.)

BETWEEN the City of Fayetteville:
(Name, legal status and address)

City of Fayetteville
113 W. Mountain
Fayetteville, Arkansas 72701
113 W. Mountain
Fayetteville, Arkansas 72701
herein after referred to as the City of Fayetteville

and the Baldwin & Shell Construction Company:
(Name, legal status and address)

Baldwin & Shell Construction Company
593 Horsebarn Road, Ste 100
Rogers, Arkansas 72758

for the following Project:
(Name and address or location)

City of Fayetteville Entertainment District Parking Deck in the vicinity of South School Avenue & Spring Street, Fayetteville, Arkansas consisting of the Parking Deck, with Liner Buildings for the City of Fayetteville & Walton Arts Center

The Engineer:
(Name, legal status and address)

Garver, LLC.
2049 E. Joyce Blvd., Ste 400
Fayetteville, AR 72703

The City of Fayetteville's Designated Representative:
(Name, address and other information)

David Jurgens, P.E.
Utilities Director
113 W. Mountain
Fayetteville, AR 72701
479-575-8330
479-575-8257 fx

Init.
/

AIA Document A133™ – 2009 (formerly A121™CMc – 2003). Copyright © 1991, 2003 and 2009 by The American Institute of Architects. All rights reserved.
WARNING: This AIA® Document is protected by U.S. Copyright Law and International Treaties. Unauthorized reproduction or distribution of this AIA® Document, or any portion of it, may result in severe civil and criminal penalties, and will be prosecuted to the maximum extent possible under the law.
This document was produced by AIA software at 15:41:29 on 04/01/2013 under Order No.3625291867_1 which expires on 08/10/2013, and is not for resale.
User Notes:
(1634944628)

The Baldwin & Shell Construction Company's Designated Representative:
(Name, address and other information)

Mike Castagna
Project Manager
593 Horsebarn Road, Ste. 100
Rogers, AR 72758
479-845-1111
479-845-1115 fx
479-644-9006 mob

The Engineer's Designated Representative:
(Name, address and other information)

Ron Petrie, P.E.
Senior Project Manager
2049 E. Joyce Blvd., Ste 400
Fayetteville, AR 72703
479-287-4630
479-527-9101 fx

The City of Fayetteville and Baldwin & Shell Construction Company agree as follows.

AIA Document A133™ – 2009 (formerly A121™CMc – 2003). Copyright © 1991, 2003 and 2009 by The American Institute of Architects. All rights reserved.
WARNING: This AIA® Document is protected by U.S. Copyright Law and International Treaties. Unauthorized reproduction or distribution of this AIA® Document, or any portion of it, may result in severe civil and criminal penalties, and will be prosecuted to the maximum extent possible under the law.
This document was produced by AIA software at 15:41:29 on 04/01/2013 under Order No.3625291867_1 which expires on 08/10/2013, and is not for resale.
User Notes: (1634944628)

TABLE OF ARTICLES

1 GENERAL PROVISIONS

2 BALDWIN & SHELL CONSTRUCTION COMPANY'S RESPONSIBILITIES

3 CITY OF FAYETTEVILLE'S RESPONSIBILITIES

4 COMPENSATION AND PAYMENTS FOR PRECONSTRUCTION PHASE SERVICES

5 COMPENSATION FOR CONSTRUCTION PHASE SERVICES

6 COST OF THE WORK FOR CONSTRUCTION PHASE

7 PAYMENTS FOR CONSTRUCTION PHASE SERVICES

8 INSURANCE AND BONDS

9 DISPUTE RESOLUTION

10 TERMINATION OR SUSPENSION

11 MISCELLANEOUS PROVISIONS

12 SCOPE OF THE AGREEMENT

ARTICLE 1 GENERAL PROVISIONS

§ 1.1 The Contract Documents

The Contract Documents consist of this Agreement, Conditions of the Contract (General, Supplementary and other Conditions), Drawings, Specifications, Addenda issued prior to the execution of this Agreement, other documents listed in this Agreement, and Modifications issued after execution of this Agreement, all of which form the Contract and are as fully a part of the Contract as if attached to this Agreement or repeated herein. Upon the City of Fayetteville's acceptance of the Baldwin & Shell Construction Company's Guaranteed Maximum Price proposal, the Contract Documents will also include the documents described in Section 2.2.3 and identified in the Guaranteed Maximum Price Amendment and revisions prepared by the Engineer and furnished by the City of Fayetteville as described in Section 2.2.8. The Contract represents the entire and integrated agreement between the parties hereto and supersedes prior negotiations, representations or agreements, either written or oral. If anything in the other Contract Documents, other than a Modification, is inconsistent with this Agreement, this Agreement shall govern.

§ 1.2 Relationship of the Parties

The Baldwin & Shell Construction Company accepts the relationship of trust and confidence established by this Agreement and covenants with the City of Fayetteville to cooperate with the Engineer and exercise the Baldwin & Shell Construction Company's skill and judgment in furthering the interests of the City of Fayetteville; to furnish efficient construction administration, management services and supervision; to furnish at all times an adequate supply of workers and materials; and to perform the Work in an expeditious and economical manner consistent with the City of Fayetteville's interests. The City of Fayetteville agrees to furnish or approve, in a timely manner, information required by the Baldwin & Shell Construction Company and to make payments to the Baldwin & Shell Construction Company in accordance with the requirements of the Contract Documents. Baldwin & Shell will exercise reasonable skill, care, and diligence in the performance of the Baldwin & Shell's services and will carry out its responsibilities in accordance with customarily accepted professional construction management practices. The City of Fayetteville will promptly report to Baldwin & Shell any defects or suspected defects in Baldwin & Shell's services of which the City of Fayetteville becomes aware, so that Baldwin & Shell can take measures to minimize the consequences of such a defect. The City of Fayetteville retains all remedies to recover for its damages caused by any negligence of Baldwin & Shell.

AIA Document A133™ – 2009 (formerly A121™CMc – 2003). Copyright © 1991, 2003 and 2009 by The American Institute of Architects. All rights reserved.
WARNING: This AIA® Document is protected by U.S. Copyright Law and International Treaties. Unauthorized reproduction or distribution of this AIA® Document, or any portion of it, may result in severe civil and criminal penalties, and will be prosecuted to the maximum extent possible under the law.
This document was produced by AIA software at 11:25:40 on 04/02/2013 under Order No.3625291867_1 which expires on 08/10/2013, and is not for resale.
User Notes:
(794915699)

§ 1.3 General Conditions
For the Preconstruction Phase, AIA Document A201™–2007, General Conditions of the Contract for Construction, shall apply only as specifically provided in this Agreement. For the Construction Phase, the general conditions of the contract shall be as set forth in A201–2007, which document is incorporated herein by reference. The term "Owner" as used in the A201-2007 shall mean The City of Fayetteville. The terms "Construction Manager" or "Contractor" as used in the A201-2007 shall mean Baldwin & Shell Construction Company. The term "Architect" as used in A201–2007 shall mean the Engineer.

(Paragraphs deleted)
ARTICLE 2 BALDWIN & SHELL CONSTRUCTION COMPANY'S RESPONSIBILITIES
The Baldwin & Shell Construction Company's Preconstruction Phase responsibilities are set forth in Sections 2.1 and 2.2. The Baldwin & Shell Construction Company's Construction Phase responsibilities are set forth in Section 2.3. The City of Fayetteville and Baldwin & Shell Construction Company may agree, in consultation with the Engineer for the Construction Phase to commence prior to completion of the Preconstruction Phase, in which case, both phases will proceed concurrently. The Baldwin & Shell Construction Company shall identify a representative authorized to act on behalf of the Baldwin & Shell Construction Company with respect to the Project.

§ 2.1 Preconstruction Phase
§ 2.1.1 The Baldwin & Shell Construction Company shall provide a preliminary evaluation of the City of Fayetteville's project, schedule and construction budget requirements, each in terms of the other.

§ 2.1.2 Consultation
The Baldwin & Shell Construction Company shall schedule and conduct meetings with the Engineer and City of Fayetteville to discuss such matters as procedures, progress, coordination, and scheduling of the Work. The Baldwin & Shell Construction Company shall advise the City of Fayetteville and the Engineer on proposed site use and improvements, selection of materials, and building systems and equipment. The Baldwin & Shell Construction Company shall also provide recommendations consistent with the Project requirements to the City of Fayetteville and Engineer on constructability; availability of materials and labor; time requirements for procurement, installation and construction; and factors related to construction cost including, but not limited to, costs of alternative designs or materials, preliminary budgets, life-cycle data, and possible cost reductions.

§ 2.1.3 When Project requirements in Section 3.1.1 have been sufficiently identified, the Baldwin & Shell Construction Company shall prepare and periodically update a Project schedule for the Engineer's review and the City of Fayetteville's acceptance. The Baldwin & Shell Construction Company shall obtain the Engineer's approval for the portion of the Project schedule relating to the performance of the Engineer's services. The Project schedule shall coordinate and integrate the Baldwin & Shell Construction Company's services, the Engineer's services, other City of Fayetteville consultants' services, and the City of Fayetteville's responsibilities and identify items that could affect the Project's timely completion. The updated Project schedule shall include the following: submission of the Guaranteed Maximum Price proposal; components of the Work; times of commencement and completion required of each Subcontractor; ordering and delivery of products, including those that must be ordered well in advance of construction; and the occupancy requirements of the City of Fayetteville.

§ 2.1.4 Phased Construction
The Baldwin & Shell Construction Company shall provide recommendations with regard to accelerated or fast-track scheduling, procurement, or phased construction. The Baldwin & Shell Construction Company shall take into consideration cost reductions, cost information, constructability, provisions for temporary facilities and procurement and construction scheduling issues.

§ 2.1.5 Preliminary Cost Estimates
§ 2.1.5.1 Based on the preliminary design and other design criteria prepared by the Engineer the Baldwin & Shell Construction Company shall prepare preliminary estimates of the Cost of the Work or the cost of program requirements using area, volume or similar conceptual estimating techniques for the Engineer's review and City of Fayetteville's approval. If the Engineer or Baldwin & Shell Construction Company suggests alternative materials and systems, the Baldwin & Shell Construction Company shall provide cost evaluations of those alternative materials and systems.

AIA Document A133™ – 2009 (formerly A121™CMc – 2003). Copyright © 1991, 2003 and 2009 by The American Institute of Architects. All rights reserved.
WARNING: This AIA® Document is protected by U.S. Copyright Law and International Treaties. Unauthorized reproduction or distribution of this AIA® Document, or any portion of it, may result in severe civil and criminal penalties, and will be prosecuted to the maximum extent possible under the law.
This document was produced by AIA software at 15:41:29 on 04/01/2013 under Order No.3625291867_1 which expires on 08/10/2013, and is not for resale.
User Notes: (1634944628)

§ 2.1.5.2 As the Engineer progresses with the preparation of the Schematic Design, Design Development and Construction Documents, the Baldwin & Shell Construction Company shall prepare and update, at appropriate intervals agreed to by the City of Fayetteville, Baldwin & Shell Construction Company and Engineer estimates of the Cost of the Work of increasing detail and refinement and allowing for the further development of the design until such time as the City of Fayetteville and Baldwin & Shell Construction Company agree on a Guaranteed Maximum Price for the Work. Such estimates shall be provided for the Engineer's review and the City of Fayetteville's approval. The Baldwin & Shell Construction Company shall inform the City of Fayetteville and Engineer when estimates of the Cost of the Work exceed the latest approved Project budget and make recommendations for corrective action.

§ 2.1.6 Baldwin & Shell Construction Company and Suppliers
The Baldwin & Shell Construction Company shall develop bidders' interest in the Project.

§ 2.1.7 The Baldwin & Shell Construction Company shall prepare, for the Engineer's review and the City of Fayetteville's acceptance, a procurement schedule for items that must be ordered well in advance of construction. The Baldwin & Shell Construction Company shall expedite and coordinate the ordering and delivery of materials that must be ordered well in advance of construction. If the City of Fayetteville agrees to procure any items prior to the establishment of the Guaranteed Maximum Price, the City of Fayetteville shall procure the items on terms and conditions acceptable to the Baldwin & Shell Construction Company. Upon the establishment of the Guaranteed Maximum Price, the City of Fayetteville shall assign all contracts for these items to the Baldwin & Shell Construction Company and the Baldwin & Shell Construction Company shall thereafter accept responsibility for them.

§ 2.1.8 Extent of Responsibility
The Baldwin & Shell Construction Company shall exercise reasonable care in preparing schedules and estimates. The Baldwin & Shell Construction Company, however, does not warrant or guarantee estimates and schedules except as may be included as part of the Guaranteed Maximum Price. The Baldwin & Shell Construction Company is not required to ascertain that the Drawings and Specifications are in accordance with applicable laws, statutes, ordinances, codes, rules and regulations, or lawful orders of public authorities, but the Baldwin & Shell Construction Company shall promptly report to the Engineer and City of Fayetteville any nonconformity discovered by or made known to the Baldwin & Shell Construction Company as a request for information in such form as the Engineer may require.

§ 2.1.9 Notices and Compliance with Laws
The Baldwin & Shell Construction Company shall comply with applicable laws, statutes, ordinances, codes, rules and regulations, and lawful orders of public authorities applicable to its performance under this Contract, and with equal employment opportunity programs, and other programs as may be required by governmental and quasi governmental authorities for inclusion in the Contract Documents.

§ 2.2 Guaranteed Maximum Price Proposal and Contract Time
§ 2.2.1 At a time to be mutually agreed upon by the City of Fayetteville and the Baldwin & Shell Construction Company and in consultation with the Engineer, the Baldwin & Shell Construction Company shall prepare a Guaranteed Maximum Price proposal for the City of Fayetteville's review and acceptance. The Guaranteed Maximum Price in the proposal shall be the sum of the Baldwin & Shell Construction Company's estimate of the Cost of the Work, including contingencies described in Section 2.2.4, and the Baldwin & Shell Construction Company's Fee.

§ 2.2.2 To the extent that the Drawings and Specifications are anticipated to require further development by the Engineer, the Baldwin & Shell Construction Company shall provide in the Guaranteed Maximum Price for such further development consistent with the Contract Documents and reasonably inferable therefrom. Such further development does not include such things as changes in scope, systems, kinds and quality of materials, finishes or equipment, all of which, if required, shall be incorporated by Change Order.

§ 2.2.3 The Baldwin & Shell Construction Company shall include with the Guaranteed Maximum Price proposal a written statement of its basis, which shall include the following:

.1 A list of the Drawings and Specifications, including all Addenda thereto, and the Conditions of the Contract;

.2 A list of the clarifications and assumptions made by the Baldwin & Shell Construction Company in the preparation of the Guaranteed Maximum Price proposal, including assumptions under Section 2.2.2, to supplement the information provided by the City of Fayetteville and contained in the Drawings and Specifications;

AIA Document A133™ – 2009 (formerly A121™CMc – 2003). Copyright © 1991, 2003 and 2009 by The American Institute of Architects. All rights reserved.
WARNING: This AIA® Document is protected by U.S. Copyright Law and International Treaties. Unauthorized reproduction or distribution of this AIA® Document, or any portion of it, may result in severe civil and criminal penalties, and will be prosecuted to the maximum extent possible under the law.
This document was produced by AIA software at 15:41:29 on 04/01/2013 under Order No.3625291867_1 which expires on 08/10/2013, and is not for resale.
User Notes: (1634944628)

.3 A statement of the proposed Guaranteed Maximum Price, including a statement of the estimated Cost of the Work organized by trade categories or systems, allowances, contingency, and the Baldwin & Shell Construction Company's Fee;

.4 The anticipated date of Substantial Completion upon which the proposed Guaranteed Maximum Price is based; and

.5 A date by which the City of Fayetteville must accept the Guaranteed Maximum Price.

§ 2.2.4 In preparing the Baldwin & Shell Construction Company's Guaranteed Maximum Price proposal, the Baldwin & Shell Construction Company shall include its contingency for the Baldwin & Shell Construction Company's exclusive use to cover those costs considered reimbursable as the Cost of the Work but not included in a Change Order.

§ 2.2.5 The Baldwin & Shell Construction Company shall meet with the City of Fayetteville and Engineer to review the Guaranteed Maximum Price proposal. In the event that the City of Fayetteville and Engineer discover any inconsistencies or inaccuracies in the information presented, they shall promptly notify the Baldwin & Shell Construction Company, who shall make appropriate adjustments to the Guaranteed Maximum Price proposal, its basis, or both.

§ 2.2.6 If the City of Fayetteville notifies the Baldwin & Shell Construction Company that the City of Fayetteville has accepted the Guaranteed Maximum Price proposal in writing before the date specified in the Guaranteed Maximum Price proposal, the Guaranteed Maximum Price proposal shall be deemed effective without further acceptance from the Baldwin & Shell Construction Company. Following acceptance of a Guaranteed Maximum Price, the City of Fayetteville and Baldwin & Shell Construction Company shall execute the Guaranteed Maximum Price Amendment amending this Agreement, a copy of which the City of Fayetteville shall provide to the Engineer. The Guaranteed Maximum Price Amendment shall set forth the agreed upon Guaranteed Maximum Price with the information and assumptions upon which it is based.

§ 2.2.7 The Baldwin & Shell Construction Company shall not incur any cost to be reimbursed as part of the Cost of the Work prior to the commencement of the Construction Phase, unless the City of Fayetteville provides prior written authorization for such costs.

§ 2.2.8 The City of Fayetteville shall authorize the Engineer to provide the revisions to the Drawings and Specifications to incorporate the agreed-upon assumptions and clarifications contained in the Guaranteed Maximum Price Amendment. The City of Fayetteville shall promptly furnish those revised Drawings and Specifications to the Baldwin & Shell Construction Company as they are revised. The Baldwin & Shell Construction Company shall notify the City of Fayetteville and Engineer of any inconsistencies between the Guaranteed Maximum Price Amendment and the revised Drawings and Specifications.

§ 2.2.9 The Baldwin & Shell Construction Company shall include in the Guaranteed Maximum Price all sales, consumer, use and similar taxes for the Work provided by the Baldwin & Shell Construction Company that are legally enacted, whether or not yet effective, at the time the Guaranteed Maximum Price Amendment is executed.

§ 2.3 Construction Phase

§ 2.3.1 General

§ 2.3.1.1 For purposes of Section 8.1.2 of A201–2007, the date of commencement of the Work shall mean the date of commencement of the Construction Phase.

§ 2.3.1.2 The Construction Phase shall commence upon the City of Fayetteville's acceptance of the Baldwin & Shell Construction Company's Guaranteed Maximum Price proposal or the City of Fayetteville's issuance of a Notice to Proceed, whichever occurs earlier.

§ 2.3.2 Administration

§ 2.3.2.1 Those portions of the Work that the Baldwin & Shell Construction Company does not customarily perform with the Baldwin & Shell Construction Company's own personnel shall be performed under subcontracts or by other appropriate agreements with the Baldwin & Shell Construction Company. The City of Fayetteville may designate specific persons from whom, or entities from which, the Baldwin & Shell Construction Company shall obtain bids. The Baldwin & Shell Construction Company shall obtain bids from Subcontractors and from suppliers of materials or

Init.
/
AIA Document A133™ – 2009 (formerly A121™CMc – 2003). Copyright © 1991, 2003 and 2009 by The American Institute of Architects. All rights reserved.
WARNING: This AIA® Document is protected by U.S. Copyright Law and International Treaties. Unauthorized reproduction or distribution of this AIA® Document, or any portion of it, may result in severe civil and criminal penalties, and will be prosecuted to the maximum extent possible under the law.
This document was produced by AIA software at 15:41:29 on 04/01/2013 under Order No.3625291867_1 which expires on 08/10/2013, and is not for resale.
User Notes:
(1634944628)

equipment fabricated especially for the Work and shall deliver such bids to the Engineer. The City of Fayetteville shall then determine, with the advice of the Baldwin & Shell Construction Company and the Engineer, which bids will be accepted. The Baldwin & Shell Construction Company shall not be required to contract with anyone to whom the Baldwin & Shell Construction Company has reasonable objection.

§ 2.3.2.2 If the Guaranteed Maximum Price has been established and when a specific bidder (1) is recommended to the City of Fayetteville by the Baldwin & Shell Construction Company, (2) is qualified to perform that portion of the Work, and (3) has submitted a bid that conforms to the requirements of the Contract Documents without reservations or exceptions, but the City of Fayetteville requires that another bid be accepted, then the Baldwin & Shell Construction Company may require that a Change Order be issued to adjust the Contract Time and the Guaranteed Maximum Price by the difference between the bid of the person or entity recommended to the City of Fayetteville by the Baldwin & Shell Construction Company and the amount and time requirement of the subcontract or other agreement actually signed with the person or entity designated by the City of Fayetteville.

§ 2.3.2.3 Subcontracts or other agreements shall conform to the applicable payment provisions of this Agreement, and shall not be awarded on the basis of cost plus a fee without the prior consent of the City of Fayetteville. If the Subcontract is awarded on a cost-plus a fee basis, the Baldwin & Shell Construction Company shall provide in the Subcontract for the City of Fayetteville to receive the same audit rights with regard to the Subcontractor as the City of Fayetteville receives with regard to the Baldwin & Shell Construction Company in Section 6.11 below.

§ 2.3.2.4 If the Baldwin & Shell Construction Company recommends a specific bidder that may be considered a "related party" according to Section 6.10, then the Baldwin & Shell Construction Company shall promptly notify the City of Fayetteville in writing of such relationship and notify the City of Fayetteville of the specific nature of the contemplated transaction, according to Section 6.10.2.

§ 2.3.2.5 The Baldwin & Shell Construction Company shall schedule and conduct meetings to discuss such matters as procedures, progress, coordination, scheduling, and status of the Work. The Baldwin & Shell Construction Company shall prepare and promptly distribute minutes to the City of Fayetteville and Engineer.

§ 2.3.2.6 Upon the execution of the Guaranteed Maximum Price Amendment, the Baldwin & Shell Construction Company shall prepare and submit to the City of Fayetteville and Engineer a construction schedule for the Work and submittal schedule in accordance with Section 3.10 of A201–2007.

§ 2.3.2.7 The Baldwin & Shell Construction Company shall record the progress of the Project. On a monthly basis, or otherwise as agreed to by the City of Fayetteville, the Baldwin & Shell Construction Company shall submit written progress reports to the City of Fayetteville and Engineer, showing percentages of completion and other information required by the City of Fayetteville. The Baldwin & Shell Construction Company shall also keep, and make available to the City of Fayetteville and Engineer., a daily log containing a record for each day of weather, portions of the Work in progress, number of workers on site, identification of equipment on site, problems that might affect progress of the work, accidents, injuries, and other information required by the City of Fayetteville.

§ 2.3.2.8 The Baldwin & Shell Construction Company shall develop a system of cost control for the Work, including regular monitoring of actual costs for activities in progress and estimates for uncompleted tasks and proposed changes. The Baldwin & Shell Construction Company shall identify variances between actual and estimated costs and report the variances to the City of Fayetteville and Engineer. and shall provide this information in its monthly reports to the City of Fayetteville and Engineer, in accordance with Section 2.3.2.7 above.

§ 2.4 Professional Services
Section 3.12.10 of A201–2007 shall apply to both the Preconstruction and Construction Phases.

§ 2.5 Hazardous Materials
Section 10.3 of A201–2007 shall apply to both the Preconstruction and Construction Phases.

ARTICLE 3 CITY OF FAYETTEVILLE'S RESPONSIBILITIES
§ 3.1 Information and Services Required of the City of Fayetteville
§ 3.1.1 The City of Fayetteville shall provide information with reasonable promptness, regarding requirements for and limitations on the Project, including a written program which shall set forth the City of Fayetteville's objectives,

Init.
/
AIA Document A133™ – 2009 (formerly A121™CMc – 2003). Copyright © 1991, 2003 and 2009 by The American Institute of Architects. All rights reserved.
WARNING: This AIA® Document is protected by U.S. Copyright Law and International Treaties. Unauthorized reproduction or distribution of this AIA® Document, or any portion of it, may result in severe civil and criminal penalties, and will be prosecuted to the maximum extent possible under the law.
This document was produced by AIA software at 15:41:29 on 04/01/2013 under Order No.3625291867_1 which expires on 08/10/2013, and is not for resale.
User Notes:
(1634944628)

constraints, and criteria, including schedule, space requirements and relationships, flexibility and expandability, special equipment, systems sustainability and site requirements.

§ **3.1.2** Prior to the execution of the Guaranteed Maximum Price Amendment, the Baldwin & Shell Construction Company may request in writing that the City of Fayetteville provide reasonable evidence that the City of Fayetteville has made financial arrangements to fulfill the City of Fayetteville's obligations under the Contract. Thereafter, the Baldwin & Shell Construction Company may only request such evidence if (1) the City of Fayetteville fails to make payments to the Baldwin & Shell Construction Company as the Contract Documents require, (2) a change in the Work materially changes the Contract Sum, or (3) the Baldwin & Shell Construction Company identifies in writing a reasonable concern regarding the City of Fayetteville's ability to make payment when due. The City of Fayetteville shall furnish such evidence as a condition precedent to commencement or continuation of the Work or the portion of the Work affected by a material change. After the City of Fayetteville furnishes the evidence, the City of Fayetteville shall not materially vary such financial arrangements without prior notice to the Baldwin & Shell Construction Company and Engineer.

§ **3.1.3** The City of Fayetteville shall establish and periodically update the City of Fayetteville's budget for the Project, including (1) the budget for the Cost of the Work as defined in Section 6.1.1, (2) the City of Fayetteville's other costs, and (3) reasonable contingencies related to all of these costs. If the City of Fayetteville significantly increases or decreases the City of Fayetteville's budget for the Cost of the Work, the City of Fayetteville shall notify the Baldwin & Shell Construction Company and Engineer. The City of Fayetteville and the Engineer in consultation with the Baldwin & Shell Construction Company, shall thereafter agree to a corresponding change in the Project's scope and quality.

§ **3.1.4 Structural and Environmental Tests, Surveys and Reports.** During the Preconstruction Phase, the City of Fayetteville shall furnish the following information or services with reasonable promptness. The City of Fayetteville shall also furnish any other information or services under the City of Fayetteville's control and relevant to the Baldwin & Shell Construction Company's performance of the Work with reasonable promptness after receiving the Baldwin & Shell Construction Company's written request for such information or services. The Baldwin & Shell Construction Company shall be entitled to rely on the accuracy of information and services furnished by the City of Fayetteville but shall exercise proper precautions relating to the safe performance of the Work.

§ **3.1.4.1** The City of Fayetteville shall furnish tests, inspections and reports required by law and as otherwise agreed to by the parties, such as structural, mechanical, and chemical tests, tests for air and water pollution, and tests for hazardous materials.

§ **3.1.4.2** The City of Fayetteville shall furnish surveys describing physical characteristics, legal limitations and utility locations for the site of the Project, and a legal description of the site. The surveys and legal information shall include, as applicable, grades and lines of streets, alleys, pavements and adjoining property and structures; designated wetlands; adjacent drainage; rights-of-way, restrictions, easements, encroachments, zoning, deed restrictions, boundaries and contours of the site; locations, dimensions and necessary data with respect to existing buildings, other improvements and trees; and information concerning available utility services and lines, both public and private, above and below grade, including inverts and depths. All the information on the survey shall be referenced to a Project benchmark.

§ **3.1.4.3** The City of Fayetteville, when such services are requested, shall furnish services of geotechnical engineers, which may include but are not limited to test borings, test pits, determinations of soil bearing values, percolation tests, evaluations of hazardous materials, seismic evaluation, ground corrosion tests and resistivity tests, including necessary operations for anticipating subsoil conditions, with written reports and appropriate recommendations.

§ **3.1.4.4** During the Construction Phase, the City of Fayetteville shall furnish information or services required of the City of Fayetteville by the Contract Documents with reasonable promptness. The City of Fayetteville shall also furnish any other information or services under the City of Fayetteville's control and relevant to the Baldwin & Shell Construction Company's performance of the Work with reasonable promptness after receiving the Baldwin & Shell Construction Company's written request for such information or services.

Init.
/
AIA Document A133™ – 2009 (formerly A121™CMc – 2003). Copyright © 1991, 2003 and 2009 by The American Institute of Architects. All rights reserved.
WARNING: This AIA® Document is protected by U.S. Copyright Law and International Treaties. Unauthorized reproduction or distribution of this AIA® Document, or any portion of it, may result in severe civil and criminal penalties, and will be prosecuted to the maximum extent possible under the law.
This document was produced by AIA software at 15:41:29 on 04/01/2013 under Order No.3625291867_1 which expires on 08/10/2013, and is not for resale.
User Notes: (1634944628)

§ 3.2 City of Fayetteville's Designated Representative
The City of Fayetteville shall identify a representative authorized to act on behalf of the City of Fayetteville with respect to the Project. The City of Fayetteville's representative shall render decisions promptly and furnish information expeditiously, so as to avoid unreasonable delay in the services or Work of the Baldwin & Shell Construction Company. Except as otherwise provided in Section 4.2.1 of A201–2007, the Engineer does not have such authority. The term "Owner" as used in the A201-2007 means the City of Fayetteville or the City of Fayetteville's authorized representative.

§ 3.2.1 Legal Requirements. The City of Fayetteville shall furnish all legal, insurance and accounting services, including auditing services, that may be reasonably necessary at any time for the Project to meet the City of Fayetteville's needs and interests.

§ 3.3 Engineer
The City of Fayetteville shall retain an Engineer to provide services, duties and responsibilities as described in AIA Document B103™–2007, Standard Form of Agreement Between City of Fayetteville and Engineer including any additional services requested by the Baldwin & Shell Construction Company that are necessary for the Preconstruction and Construction Phase services under this Agreement. The City of Fayetteville shall provide the Baldwin & Shell Construction Company a copy of the executed agreement between the City of Fayetteville and the Engineer and any further modifications to the agreement.

ARTICLE 4 COMPENSATION AND PAYMENTS FOR PRECONSTRUCTION PHASE SERVICES

§ 4.1 Compensation
§ 4.1.1 For the Baldwin & Shell Construction Company's Preconstruction Phase services, the City of Fayetteville shall compensate the Baldwin & Shell Construction Company as follows:

§ 4.1.2 For the Baldwin & Shell Construction Company's Preconstruction Phase services described in Sections 2.1 and 2.2:
(Insert amount of, or basis for, compensation and include a list of reimbursable cost items, as applicable.)

A lump sum amount of $40,000

§ 4.1.3 If the Preconstruction Phase services covered by this Agreement have not been completed within six (6) months of the date of this Agreement, through no fault of the Baldwin & Shell Construction Company, the Baldwin & Shell Construction Company's compensation for Preconstruction Phase services shall be equitably adjusted.

§ 4.1.4 Compensation based on Direct Personnel Expense includes the direct salaries of the Baldwin & Shell Construction Company's personnel providing Preconstruction Phase services on the Project and the Baldwin & Shell Construction Company's costs for the mandatory and customary contributions and benefits related thereto, such as employment taxes and other statutory employee benefits, insurance, sick leave, holidays, vacations, employee retirement plans and similar contributions.

§ 4.2 Payments
§ 4.2.1 Unless otherwise agreed, payments for services shall be made monthly in proportion to services performed.

§ 4.2.2 Payments are due and payable upon presentation of the Baldwin & Shell Construction Company's invoice. Amounts unpaid twenty-five (25) days after the invoice date shall bear interest at the rate entered below, or in the absence thereof at the legal rate prevailing from time to time at the principal place of business of the Baldwin & Shell Construction Company.
(Insert rate of monthly or annual interest agreed upon.)

ARTICLE 5 COMPENSATION FOR CONSTRUCTION PHASE SERVICES

§ 5.1 For the Baldwin & Shell Construction Company's performance of the Work as described in Section 2.3, the City of Fayetteville shall pay the Baldwin & Shell Construction Company the Contract Sum in current funds. The Contract Sum is the Cost of the Work as defined in Section 6.1.1 plus the Baldwin & Shell Construction Company's Fee.

§ 5.1.1 The Baldwin & Shell Construction Company's Fee:

AIA Document A133™ – 2009 (formerly A121™CMc – 2003). Copyright © 1991, 2003 and 2009 by The American Institute of Architects. All rights reserved.
WARNING: This AIA® Document is protected by U.S. Copyright Law and International Treaties. Unauthorized reproduction or distribution of this AIA® Document, or any portion of it, may result in severe civil and criminal penalties, and will be prosecuted to the maximum extent possible under the law.
This document was produced by AIA software at 15:41:29 on 04/01/2013 under Order No.3625291867_1 which expires on 08/10/2013, and is not for resale.
User Notes: (1634944628)

(State a lump sum, percentage of Cost of the Work or other provision for determining the Baldwin & Shell Construction Company's Fee.)

The Construction Phase Services fee shall be calculated at the time the Guarantee Maximum Price is established by taking the total estimated cost of the work for the entire project, including costs incurred during the pre-construction phase of the project as defined in Sections 2.1.1 through 2.1.9 and further defined in Sections 6.1.1 through 6.7.4 and then applying a five and one half percent (5 ½) to the total estimated cost. The fee will then be converted to a lump sum amount less the Precontruction Phase fee of $40,000 defined in 4.1.2. The lump sum fee will not be reduced based on savings in cost or reduction of scope by change order.

§ 5.1.2 The method of adjustment of the Baldwin & Shell Construction Company's Fee for changes in the Work:

All additive change order work shall carry a five and one half percent (5-1/2%) fee

§ 5.1.3 Limitations, if any, on a Subcontractor's overhead and profit for increases in the cost of its portion of the Work:

As defined the the Project Manual Supplementary Conditions

§ 5.1.4 Rental rates for Baldwin & Shell Construction Company-owned equipment shall not exceed eight-five percent (85 %) of the standard rate paid at the place of the Project.

§ 5.1.5 Unit prices, if any:
(Identify and state the unit price; state the quantity limitations, if any, to which the unit price will be applicable.)

Item	Units and Limitations	Price per Unit ($0.00)

§ 5.2 Guaranteed Maximum Price

§ 5.2.1 The Baldwin & Shell Construction Company guarantees that the Contract Sum shall not exceed the Guaranteed Maximum Price set forth in the Guaranteed Maximum Price Amendment, as it is amended from time to time. To the extent the Cost of the Work exceeds the Guaranteed Maximum Price, the Baldwin & Shell Construction Company shall bear such costs in excess of the Guaranteed Maximum Price without reimbursement or additional compensation from the City of Fayetteville.
(Insert specific provisions if the Baldwin & Shell Construction Company is to participate in any savings.)

All savings shall accrue one hundred percent (100%) to the City of Fayetteville

§ 5.2.2 The Guaranteed Maximum Price is subject to additions and deductions by Change Order as provided in the Contract Documents and the Date of Substantial Completion shall be subject to adjustment as provided in the Contract Documents.

§ 5.3 Changes in the Work

§ 5.3.1 The City of Fayetteville may, without invalidating the Contract, order changes in the Work within the general scope of the Contract consisting of additions, deletions or other revisions. The City of Fayetteville shall issue such changes in writing. The Engineer may make minor changes in the Work as provided in Section 7.4 of AIA Document A201–2007, General Conditions of the Contract for Construction. The Baldwin & Shell Construction Company shall be entitled to an equitable adjustment in the Contract Time as a result of changes in the Work.

§ 5.3.2 Adjustments to the Guaranteed Maximum Price on account of changes in the Work subsequent to the execution of the Guaranteed Maximum Price Amendment may be determined by any of the methods listed in Section 7.3.3 of AIA Document A201–2007, General Conditions of the Contract for Construction.

§ 5.3.3 In calculating adjustments to subcontracts (except those awarded with the City of Fayetteville's prior consent on the basis of cost plus a fee), the terms "cost" and "fee" as used in Section 7.3.3.3 of AIA Document A201–2007 and the term "costs" as used in Section 7.3.7 of AIA Document A201–2007 shall have the meanings assigned to them in

Init.
/
AIA Document A133™ – 2009 (formerly A121™CMc – 2003). Copyright © 1991, 2003 and 2009 by The American Institute of Architects. All rights reserved.
WARNING: This AIA® Document is protected by U.S. Copyright Law and International Treaties. Unauthorized reproduction or distribution of this AIA® Document, or any portion of it, may result in severe civil and criminal penalties, and will be prosecuted to the maximum extent possible under the law.
This document was produced by AIA software at 15:41:29 on 04/01/2013 under Order No.3625291867_1 which expires on 08/10/2013, and is not for resale.
User Notes:
(1634944628)

AIA Document A201–2007 and shall not be modified by Sections 5.1 and 5.2, Sections 6.1 through 6.7, and Section 6.8 of this Agreement. Adjustments to subcontracts awarded with the City of Fayetteville's prior consent on the basis of cost plus a fee shall be calculated in accordance with the terms of those subcontracts.

§ 5.3.4 In calculating adjustments to the Guaranteed Maximum Price, the terms "cost" and "costs" as used in the above-referenced provisions of AIA Document A201–2007 shall mean the Cost of the Work as defined in Sections 6.1 to 6.7 of this Agreement and the term "fee" shall mean the Baldwin & Shell Construction Company's Fee as defined in Section 5.1 of this Agreement.

§ 5.3.5 If no specific provision is made in Section 5.1.2 for adjustment of the Baldwin & Shell Construction Company's Fee in the case of changes in the Work, or if the extent of such changes is such, in the aggregate, that application of the adjustment provisions of Section 5.1.2 will cause substantial inequity to the City of Fayetteville or Baldwin & Shell Construction Company, the Baldwin & Shell Construction Company's Fee shall be equitably adjusted on the same basis that was used to establish the Fee for the original Work, and the Guaranteed Maximum Price shall be adjusted accordingly.

ARTICLE 6 COST OF THE WORK FOR CONSTRUCTION PHASE

§ 6.1 Costs to Be Reimbursed

§ 6.1.1 The term Cost of the Work shall mean costs necessarily incurred by the Baldwin & Shell Construction Company in the proper performance of the Work. Such costs shall be at rates not higher than the standard paid at the place of the Project except with prior consent of the City of Fayetteville. The Cost of the Work shall include only the items set forth in Sections 6.1 through 6.7.

§ 6.1.2 Where any cost is subject to the City of Fayetteville's prior approval, the Baldwin & Shell Construction Company shall obtain this approval prior to incurring the cost. The parties shall endeavor to identify any such costs prior to executing Guaranteed Maximum Price Amendment.

§ 6.2 Labor Costs

§ 6.2.1 Wages of construction workers directly employed by the Baldwin & Shell Construction Company to perform the construction of the Work at the site or, with the City of Fayetteville's prior approval, at off-site workshops.

§ 6.2.2 Wages or salaries of the Baldwin & Shell Construction Company's supervisory and administrative personnel when stationed at the site with the City of Fayetteville's prior approval.
(If it is intended that the wages or salaries of certain personnel stationed at the Baldwin & Shell Construction Company's principal or other offices shall be included in the Cost of the Work, identify in Section 11.5, the personnel to be included, whether for all or only part of their time, and the rates at which their time will be charged to the Work.)

§ 6.2.3 Wages and salaries of the Baldwin & Shell Construction Company's supervisory or administrative personnel engaged at factories, workshops, jobsite or on the road, in expediting the production or transportation of materials or equipment required for the Work, but only for that portion of their time required for the Work.

§ 6.2.4 Costs paid or incurred by the Baldwin & Shell Construction Company for taxes, insurance, contributions, assessments and benefits required by law or collective bargaining agreements and, for personnel not covered by such agreements, customary benefits such as sick leave, medical and health benefits, holidays, vacations and pensions, provided such costs are based on wages and salaries included in the Cost of the Work under Sections 6.2.1 through 6.2.3.

§ 6.2.5 Bonuses, profit sharing, incentive compensation and any other discretionary payments paid to anyone hired by the Baldwin & Shell Construction Company or paid to any Baldwin & Shell Construction Company or vendor, with the City of Fayetteville's prior approval.

§ 6.3 Subcontract Costs

Payments made by the Baldwin & Shell Construction Company to Subcontractors in accordance with the requirements of the subcontracts.

AIA Document A133™ – 2009 (formerly A121™CMc – 2003). Copyright © 1991, 2003 and 2009 by The American Institute of Architects. All rights reserved.
WARNING: This AIA® Document is protected by U.S. Copyright Law and International Treaties. Unauthorized reproduction or distribution of this AIA® Document, or any portion of it, may result in severe civil and criminal penalties, and will be prosecuted to the maximum extent possible under the law.
This document was produced by AIA software at 15:41:29 on 04/01/2013 under Order No.3625291867_1 which expires on 08/10/2013, and is not for resale.
User Notes: (1634944628)

§ 6.4 Costs of Materials and Equipment Incorporated in the Completed Construction
§ 6.4.1 Costs, including transportation and storage, of materials and equipment incorporated or to be incorporated in the completed construction.

§ 6.4.2 Costs of materials described in the preceding Section 6.4.1 in excess of those actually installed to allow for reasonable waste and spoilage. Unused excess materials, if any, shall become the City of Fayetteville's property at the completion of the Work or, at the City of Fayetteville's option, shall be sold by the Baldwin & Shell Construction Company. Any amounts realized from such sales shall be credited to the City of Fayetteville as a deduction from the Cost of the Work.

§ 6.5 Costs of Other Materials and Equipment, Temporary Facilities and Related Items
§ 6.5.1 Costs of transportation, storage, installation, maintenance, dismantling and removal of materials, supplies, temporary facilities, machinery, equipment and hand tools not customarily owned by construction workers that are provided by the Baldwin & Shell Construction Company at the site and fully consumed in the performance of the Work. Costs of materials, supplies, temporary facilities, machinery, equipment and tools that are not fully consumed shall be based on the cost or value of the item at the time it is first used on the Project site less the value of the item when it is no longer used at the Project site. Costs for items not fully consumed by the Baldwin & Shell Construction Company shall mean fair market value.

§ 6.5.2 Rental charges for temporary facilities, machinery, equipment and hand tools not customarily owned by construction workers that are provided by the Baldwin & Shell Construction Company at the site and costs of transportation, installation, minor repairs, dismantling and removal. The total rental cost of any Baldwin & Shell Construction Company-owned item may not exceed the purchase price of any comparable item. Rates of Baldwin & Shell Construction Company-owned equipment and quantities of equipment shall be subject to the City of Fayetteville's prior approval.

§ 6.5.3 Costs of removal of debris from the site of the Work and its proper and legal disposal.

§ 6.5.4 Costs of document reproductions, facsimile transmissions and long-distance telephone calls, postage and parcel delivery charges, telephone service at the site and reasonable petty cash expenses of the site office.

§ 6.5.5 That portion of the reasonable expenses of the Baldwin & Shell Construction Company's supervisory or administrative personnel incurred while traveling in discharge of duties connected with the Work.

§ 6.5.6 Costs of materials and equipment suitably stored off the site at a mutually acceptable location, subject to the City of Fayetteville's prior approval.

§ 6.6 Miscellaneous Costs
§ 6.6.1 Premiums for that portion of insurance and bonds required by the Contract Documents that can be directly attributed to this Contract. Self-insurance for either full or partial amounts of the coverages required by the Contract Documents, with the City of Fayetteville's prior approval.

§ 6.6.2 Sales, use or similar taxes imposed by a governmental authority that are related to the Work and for which the Baldwin & Shell Construction Company is liable.

§ 6.6.3 Fees and assessments for the building permit and for other permits, licenses and inspections for which the Baldwin & Shell Construction Company is required by the Contract Documents to pay.

§ 6.6.4 Fees of laboratories for tests required by the Contract Documents, except those related to defective or nonconforming Work for which reimbursement is excluded by Section 13.5.3 of AIA Document A201–2007 or by other provisions of the Contract Documents, and which do not fall within the scope of Section 6.7.3.

§ 6.6.5 Royalties and license fees paid for the use of a particular design, process or product required by the Contract Documents; the cost of defending suits or claims for infringement of patent rights arising from such requirement of the Contract Documents; and payments made in accordance with legal judgments against the Baldwin & Shell Construction Company resulting from such suits or claims and payments of settlements made with the City of Fayetteville's consent. However, such costs of legal defenses, judgments and settlements shall not be included in the

AIA Document A133™ – 2009 (formerly A121™CMc – 2003). Copyright © 1991, 2003 and 2009 by The American Institute of Architects. All rights reserved.
WARNING: This AIA® Document is protected by U.S. Copyright Law and International Treaties. Unauthorized reproduction or distribution of this AIA® Document, or any portion of it, may result in severe civil and criminal penalties, and will be prosecuted to the maximum extent possible under the law.
This document was produced by AIA software at 15:41:29 on 04/01/2013 under Order No.3625291867_1 which expires on 08/10/2013, and is not for resale.
User Notes: (1634944628)

calculation of the Baldwin & Shell Construction Company's Fee or subject to the Guaranteed Maximum Price. If such royalties, fees and costs are excluded by the last sentence of Section 3.17 of AIA Document A201–2007 or other provisions of the Contract Documents, then they shall not be included in the Cost of the Work.

§ 6.6.6 Costs for electronic equipment and software, mobile phones, internet, electronic data transfer costs, office supplies, data processing, etc. directly related to the Work with the City of Fayetteville's prior approval.

§ 6.6.7 Deposits lost for causes other than the Baldwin & Shell Construction Company's negligence or failure to fulfill a specific responsibility in the Contract Documents.

§ 6.6.8 Legal, mediation and arbitration costs, including attorneys' fees, other than those arising from disputes between the City of Fayetteville and Baldwin & Shell Construction Company, reasonably incurred by the Baldwin & Shell Construction Company after the execution of this Agreement in the performance of the Work and with the City of Fayetteville's prior approval, which shall not be unreasonably withheld.

§ 6.6.9 Subject to the City of Fayetteville's prior approval, expenses incurred in accordance with the Baldwin & Shell Construction Company's standard written personnel policy for relocation and temporary living allowances of the Baldwin & Shell Construction Company's personnel required for the Work.

§ 6.7 Other Costs and Emergencies

§ 6.7.1 Other costs incurred in the performance of the Work if, and to the extent, approved in advance in writing by the City of Fayetteville.

§ 6.7.2 Costs incurred in taking action to prevent threatened damage, injury or loss in case of an emergency affecting the safety of persons and property, as provided in Section 10.4 of AIA Document A201–2007.

§ 6.7.3 Costs of repairing or correcting damaged or nonconforming Work executed by the Baldwin & Shell Construction Company, Subcontractors or suppliers, provided that such damaged or nonconforming Work was not caused by negligence or failure to fulfill a specific responsibility of the Baldwin & Shell Construction Company and only to the extent that the cost of repair or correction is not recovered by the Baldwin & Shell Construction Company from insurance, sureties, Subcontractors, suppliers, or others.

§ 6.7.4 The costs described in Sections 6.1 through 6.7 shall be included in the Cost of the Work, notwithstanding any provision of AIA Document A201–2007 or other Conditions of the Contract which may require the Baldwin & Shell Construction Company to pay such costs, unless such costs are excluded by the provisions of Section 6.8.

§ 6.8 Costs Not To Be Reimbursed

§ 6.8.1 The Cost of the Work shall not include the items listed below:

- **.1** Salaries and other compensation of the Baldwin & Shell Construction Company's personnel stationed at the Baldwin & Shell Construction Company's principal office or offices other than the site office, except as specifically provided in Section 6.2, or as may be provided in Article 11;
- **.2** Expenses of the Baldwin & Shell Construction Company's principal office and offices other than the site office with the exception of costs provided by principal office to jobsite as defined in Section 6.6.6 above ;
- **.3** Overhead and general expenses, except as may be expressly included in Sections 6.1 to 6.7;
- **.4** The Baldwin & Shell Construction Company's capital expenses, including interest on the Baldwin & Shell Construction Company's capital employed for the Work;
- **.5** Except as provided in Section 6.7.3 of this Agreement, costs due to the negligence or failure of the Baldwin & Shell Construction Company, Baldwin & Shell Construction Company and suppliers or anyone directly or indirectly employed by any of them or for whose acts any of them may be liable to fulfill a specific responsibility of the Contract;
- **.6** Any cost not specifically and expressly described in Sections 6.1 to 6.7;
- **.7** Costs, other than costs included in Change Orders approved by the City of Fayetteville, that would cause the Guaranteed Maximum Price to be exceeded; and
- **.8** Costs for services incurred during the Preconstruction Phase.

AIA Document A133™ – 2009 (formerly A121™CMc – 2003). Copyright © 1991, 2003 and 2009 by The American Institute of Architects. All rights reserved.
WARNING: This AIA® Document is protected by U.S. Copyright Law and International Treaties. Unauthorized reproduction or distribution of this AIA® Document, or any portion of it, may result in severe civil and criminal penalties, and will be prosecuted to the maximum extent possible under the law.
This document was produced by AIA software at 15:41:29 on 04/01/2013 under Order No.3625291867_1 which expires on 08/10/2013, and is not for resale.
User Notes: (1634944628)

§ 6.9 Discounts, Rebates and Refunds

§ 6.9.1 Cash discounts obtained on payments made by the Baldwin & Shell Construction Company shall accrue to the City of Fayetteville if (1) before making the payment, the Baldwin & Shell Construction Company included them in an Application for Payment and received payment from the City of Fayetteville, or (2) the City of Fayetteville has deposited funds with the Baldwin & Shell Construction Company with which to make payments; otherwise, cash discounts shall accrue to the Baldwin & Shell Construction Company. Trade discounts, rebates, refunds and amounts received from sales of surplus materials and equipment shall accrue to the City of Fayetteville, and the Baldwin & Shell Construction Company shall make provisions so that they can be obtained.

§ 6.9.2 Amounts that accrue to the City of Fayetteville in accordance with the provisions of Section 6.9.1 shall be credited to the City of Fayetteville as a deduction from the Cost of the Work.

§ 6.10 Related Party Transactions

§ 6.10.1 For purposes of Section 6.10, the term "related party" shall mean a parent, subsidiary, affiliate or other entity having common ownership or management with the Baldwin & Shell Construction Company; any entity in which any stockholder in, or management employee of, the Baldwin & Shell Construction Company owns any interest in excess of ten percent in the aggregate; or any person or entity which has the right to control the business or affairs of the Baldwin & Shell Construction Company. The term "related party" includes any member of the immediate family of any person identified above.

§ 6.10.2 If any of the costs to be reimbursed arise from a transaction between the Baldwin & Shell Construction Company and a related party, the Baldwin & Shell Construction Company shall notify the City of Fayetteville of the specific nature of the contemplated transaction, including the identity of the related party and the anticipated cost to be incurred, before any such transaction is consummated or cost incurred. If the City of Fayetteville, after such notification, authorizes the proposed transaction, then the cost incurred shall be included as a cost to be reimbursed, and the Baldwin & Shell Construction Company shall procure the Work, equipment, goods or service from the related party, as a Subcontractor, according to the terms of Sections 2.3.2.1, 2.3.2.2 and 2.3.2.3. If the City of Fayetteville fails to authorize the transaction, the Baldwin & Shell Construction Company shall procure the Work, equipment, goods or service from some person or entity other than a related party according to the terms of Sections 2.3.2.1, 2.3.2.2 and 2.3.2.3.

§ 6.11 Accounting Records

The Baldwin & Shell Construction Company shall keep full and detailed records and accounts related to the cost of the Work and exercise such controls as may be necessary for proper financial management under this Contract and to substantiate all costs incurred. The accounting and control systems shall be satisfactory to the City of Fayetteville. The City of Fayetteville and the City of Fayetteville's auditors shall, during regular business hours and upon reasonable notice, be afforded access to, and shall be permitted to audit and copy, the Baldwin & Shell Construction Company's records and accounts, including complete documentation supporting accounting entries, books, correspondence, instructions, drawings, receipts, subcontracts, Subcontractor's proposals, purchase orders, vouchers, memoranda and other data relating to this Contract. The Baldwin & Shell Construction Company shall preserve these records for a period of three years after final payment, or for such longer period as may be required by law. Baldwin & Shell Construction Company shall track costs related to separate funding sources as directed by the City of Fayetteville in order to comply with requirements of state and local law and regulations, bond covenant requirement, and to track cost of components of cost shares as may occur.

ARTICLE 7 PAYMENTS FOR CONSTRUCTION PHASE SERVICES

§ 7.1 Progress Payments

§ 7.1.1 Based upon Applications for Payment submitted to the Engineer by the Baldwin & Shell Construction Company and Certificates for Payment issued by the Engineer the City of Fayetteville shall make progress payments on account of the Contract Sum to the Baldwin & Shell Construction Company as provided below and elsewhere in the Contract Documents.

§ 7.1.2 The period covered by each Application for Payment shall be one calendar month ending on the last day of the month, or as follows:

Init.
/
AIA Document A133™ – 2009 (formerly A121™CMc – 2003). Copyright © 1991, 2003 and 2009 by The American Institute of Architects. All rights reserved.
WARNING: This AIA® Document is protected by U.S. Copyright Law and International Treaties. Unauthorized reproduction or distribution of this AIA® Document, or any portion of it, may result in severe civil and criminal penalties, and will be prosecuted to the maximum extent possible under the law.
This document was produced by AIA software at 15:41:29 on 04/01/2013 under Order No.3625291867_1 which expires on 08/10/2013, and is not for resale.
User Notes: (1634944628)

§ **7.1.3** Provided that an Application for Payment is received by the Engineer not later than the 25th day of a month, the City of Fayetteville shall make payment of the certified amount to the Baldwin & Shell Construction Company not later than the 15th day of the following month. If an Application for Payment is received by the Engineer after the application date fixed above, payment shall be made by the City of Fayetteville not later than twenty-one (21) days after the Engineer receives the Application for Payment.
(Federal, state or local laws may require payment within a certain period of time.)

§ **7.1.4** With each Application for Payment, the Baldwin & Shell Construction Company shall, upon request by the City of Fayetteville or the Engineer, submit payrolls, petty cash accounts, receipted invoices or invoices with check vouchers attached, and any other evidence required by the City of Fayetteville or Engineer to demonstrate that cash disbursements already made by the Baldwin & Shell Construction Company on account of the Cost of the Work equal or exceed progress payments already received by the Baldwin & Shell Construction Company, less that portion of those payments attributable to the Baldwin & Shell Construction Company's Fee, plus payrolls for the period covered by the present Application for Payment.

§ **7.1.5** Each Application for Payment shall be based on the most recent schedule of values submitted by the Baldwin & Shell Construction Company in accordance with the Contract Documents. The schedule of values shall allocate the entire Guaranteed Maximum Price among the various portions of the Work, except that the Baldwin & Shell Construction Company's Fee shall be shown as a single separate item. The schedule of values shall be prepared in such form and supported by such data to substantiate its accuracy as the Engineer may require. This schedule, unless objected to by the Engineer, shall be used as a basis for reviewing the Baldwin & Shell Construction Company's Applications for Payment.

§ **7.1.6** Applications for Payment shall show the percentage of completion of each portion of the Work as of the end of the period covered by the Application for Payment. The percentage of completion shall be the lesser of (1) the percentage of that portion of the Work which has actually been completed, or (2) the percentage obtained by dividing (a) the expense that has actually been incurred by the Baldwin & Shell Construction Company on account of that portion of the Work for which the Baldwin & Shell Construction Company has made or intends to make actual payment prior to the next Application for Payment by (b) the share of the Guaranteed Maximum Price allocated to that portion of the Work in the schedule of values.

§ **7.1.7** Subject to other provisions of the Contract Documents, the amount of each progress payment shall be computed as follows:

.1 Take that portion of the Guaranteed Maximum Price properly allocable to completed Work as determined by multiplying the percentage of completion of each portion of the Work by the share of the Guaranteed Maximum Price allocated to that portion of the Work in the schedule of values. Pending final determination of cost to the City of Fayetteville of changes in the Work, amounts not in dispute shall be included as provided in Section 7.3.9 of AIA Document A201–2007;

.2 Add that portion of the Guaranteed Maximum Price properly allocable to materials and equipment delivered and suitably stored at the site for subsequent incorporation in the Work, or if approved in advance by the City of Fayetteville, suitably stored off the site at a location agreed upon in writing;

.3 Add the Baldwin & Shell Construction Company's Fee, less retainage of five percent (5 %). The Baldwin & Shell Construction Company's Fee shall be computed upon the Cost of the Work at the rate stated in Section 5.1 or, if the Baldwin & Shell Construction Company's Fee is stated as a fixed sum in that Section, shall be an amount that bears the same ratio to that fixed-sum fee as the Cost of the Work bears to a reasonable estimate of the probable Cost of the Work upon its completion;

.4 Subtract retainage of five percent (5 %) from that portion of the Work that the Baldwin & Shell Construction Company self-performs;

.5 Subtract the aggregate of previous payments made by the City of Fayetteville;

.6 Subtract the shortfall, if any, indicated by the Baldwin & Shell Construction Company in the documentation required by Section 7.1.4 to substantiate prior Applications for Payment, or resulting from errors subsequently discovered by the City of Fayetteville's auditors in such documentation; and

.7 Subtract amounts, if any, for which the Engineer, has withheld or nullified a Certificate for Payment as provided in Section 9.5 of AIA Document A201–2007.

§ **7.1.8** The City of Fayetteville and Baldwin & Shell Construction Company shall agree upon (1) a mutually acceptable procedure for review and approval of payments to Baldwin & Shell Construction Company and (2) the

AIA Document A133™ – 2009 (formerly A121™CMc – 2003). Copyright © 1991, 2003 and 2009 by The American Institute of Architects. All rights reserved.
WARNING: This AIA® Document is protected by U.S. Copyright Law and International Treaties. Unauthorized reproduction or distribution of this AIA® Document, or any portion of it, may result in severe civil and criminal penalties, and will be prosecuted to the maximum extent possible under the law.
This document was produced by AIA software at 15:41:29 on 04/01/2013 under Order No.3625291867_1 which expires on 08/10/2013, and is not for resale.
User Notes: (1634944628)

percentage of retainage held on Subcontracts, and the Baldwin & Shell Construction Company shall execute subcontracts in accordance with those agreements.

§ 7.1.9 Except with the City of Fayetteville's prior approval, the Baldwin & Shell Construction Company shall not make advance payments to suppliers for materials or equipment which have not been delivered and stored at the site.

§ 7.1.10 In taking action on the Baldwin & Shell Construction Company's Applications for Payment, the Engineer shall be entitled to rely on the accuracy and completeness of the information furnished by the Baldwin & Shell Construction Company and shall not be deemed to represent that the Engineer has made a detailed examination, audit or arithmetic verification of the documentation submitted in accordance with Section 7.1.4 or other supporting data; that the Engineer has made exhaustive or continuous on-site inspections; or that the Engineer has made examinations to ascertain how or for what purposes the Baldwin & Shell Construction Company has used amounts previously paid on account of the Contract. Such examinations, audits and verifications, if required by the City of Fayetteville, will be performed by the City of Fayetteville's auditors acting in the sole interest of the City of Fayetteville.

§ 7.2 Final Payment

§ 7.2.1 Final payment, constituting the entire unpaid balance of the Contract Sum, shall be made by the City of Fayetteville to the Baldwin & Shell Construction Company when

- .1 the Baldwin & Shell Construction Company has fully performed the Contract except for the Baldwin & Shell Construction Company's responsibility to correct Work as provided in Section 12.2.2 of AIA Document A201–2007, and to satisfy other requirements, if any, which extend beyond final payment;
- .2 the Baldwin & Shell Construction Company has submitted a final accounting for the Cost of the Work and a final Application for Payment; and
- .3 a final Certificate for Payment has been issued by the Engineer.

The City of Fayetteville's final payment to the Baldwin & Shell Construction Company shall be made no later than 30 days after the issuance of the Engineer's final Certificate for Payment, or as follows:

§ 7.2.2 The City of Fayetteville's auditors will review and report in writing on the Baldwin & Shell Construction Company's final accounting within 30 days after delivery of the final accounting to the Engineer by the Baldwin & Shell Construction Company. Based upon such Cost of the Work as the City of Fayetteville's auditors report to be substantiated by the Baldwin & Shell Construction Company's final accounting, and provided the other conditions of Section 7.2.1 have been met, the Engineer will, within seven days after receipt of the written report of the City of Fayetteville's auditors, either issue to the City of Fayetteville a final Certificate for Payment with a copy to the Baldwin & Shell Construction Company, or notify the Baldwin & Shell Construction Company and City of Fayetteville in writing of the Engineers reasons for withholding a certificate as provided in Section 9.5.1 of the AIA Document A201–2007. The time periods stated in this Section supersede those stated in Section 9.4.1 of the AIA Document A201–2007. The Engineer is not responsible for verifying the accuracy of the Baldwin & Shell Construction Company's final accounting.

§ 7.2.3 If the City of Fayetteville's auditors report the Cost of the Work as substantiated by the Baldwin & Shell Construction Company's final accounting to be less than claimed by the Baldwin & Shell Construction Company, the Baldwin & Shell Construction Company shall be entitled to request mediation of the disputed amount without seeking an initial decision pursuant to Section 15.2 of A201–2007. A request for mediation shall be made by the Baldwin & Shell Construction Company within 30 days after the Baldwin & Shell Construction Company's receipt of a copy of the Engineer's final Certificate for Payment. Failure to request mediation within this 30-day period shall result in the substantiated amount reported by the City of Fayetteville's auditors becoming binding on the Baldwin & Shell Construction Company. Pending a final resolution of the disputed amount, the City of Fayetteville shall pay the Baldwin & Shell Construction Company the amount certified in the Engineer's final Certificate for Payment.

§ 7.2.4 If, subsequent to final payment and at the City of Fayetteville's request, the Baldwin & Shell Construction Company incurs costs described in Section 6.1.1 and not excluded by Section 6.8 to correct defective or nonconforming Work, the City of Fayetteville shall reimburse the Baldwin & Shell Construction Company such costs and the Baldwin & Shell Construction Company's Fee applicable thereto on the same basis as if such costs had been incurred prior to final payment, but not in excess of the Guaranteed Maximum Price. If the Baldwin & Shell

Init.
/
AIA Document A133™ – 2009 (formerly A121™CMc – 2003). Copyright © 1991, 2003 and 2009 by The American Institute of Architects. All rights reserved.
WARNING: This AIA® Document is protected by U.S. Copyright Law and International Treaties. Unauthorized reproduction or distribution of this AIA® Document, or any portion of it, may result in severe civil and criminal penalties, and will be prosecuted to the maximum extent possible under the law.
This document was produced by AIA software at 15:41:29 on 04/01/2013 under Order No.3625291867_1 which expires on 08/10/2013, and is not for resale.
User Notes:
(1634944628)

Construction Company has participated in savings as provided in Section 5.2.1, the amount of such savings shall be recalculated and appropriate credit given to the City of Fayetteville in determining the net amount to be paid by the City of Fayetteville to the Baldwin & Shell Construction Company.

ARTICLE 8 INSURANCE AND BONDS

For all phases of the Project, the Baldwin & Shell Construction Company and the City of Fayetteville shall purchase and maintain insurance, and the Baldwin & Shell Construction Company shall provide bonds as set forth in Article 11 of AIA Document A201–2007.

(State bonding requirements, if any, and limits of liability for insurance required in Article 11 of AIA Document A201–2007.)

Type of Insurance or Bond	Limit of Liability or Bond Amount ($0.00)
Performance and Payment Bonds	One-hundred percent (100%) of the Guaranteed Maximum Price

ARTICLE 9 DISPUTE RESOLUTION

§ 9.1 Any Claim between the City of Fayetteville and Baldwin & Shell Construction Company shall be resolved in accordance with the provisions set forth in this Article 9 and Article 15 of A201–2007. However, for Claims arising from or relating to the Baldwin & Shell Construction Company's Preconstruction Phase services, no decision by the Initial Decision Maker shall be required as a condition precedent to mediation or binding dispute resolution, and Section 9.3 of this Agreement shall not apply.

§ 9.2 For any Claim subject to, but not resolved by mediation pursuant to Section 15.3 of AIA Document A201–2007, the method of binding dispute resolution shall be as follows:

(Check the appropriate box. If the City of Fayetteville and Baldwin & Shell Construction Company do not select a method of binding dispute resolution below, or do not subsequently agree in writing to a binding dispute resolution method other than litigation, Claims will be resolved by litigation in a court of competent jurisdiction.)

[ ] Arbitration pursuant to Section 15.4 of AIA Document A201–2007

[X] Litigation in a court of competent jurisdiction

[ ] Other: *(Specify)*

§ 9.3 Initial Decision Maker

The Engineer will serve as the Initial Decision Maker pursuant to Section 15.2 of AIA Document A201–2007 for Claims arising from or relating to the Baldwin & Shell Construction Company's Construction Phase services, unless the parties appoint below another individual, not a party to the Agreement, to serve as the Initial Decision Maker.

(If the parties mutually agree, insert the name, address and other contact information of the Initial Decision Maker, if other than the Engineer.)

ARTICLE 10 TERMINATION OR SUSPENSION

§ 10.1 Termination Prior to Establishment of the Guaranteed Maximum Price

§ 10.1.1 Prior to the execution of the Guaranteed Maximum Price Amendment, the City of Fayetteville may terminate this Agreement upon not less than seven days' written notice to the Baldwin & Shell Construction Company for the City of Fayetteville's convenience and without cause, and the Baldwin & Shell Construction Company may terminate this Agreement, upon not less than seven days' written notice to the City of Fayetteville, for the reasons set forth in Section 14.1.1 of A201–2007.

AIA Document A133™ – 2009 (formerly A121™CMc – 2003). Copyright © 1991, 2003 and 2009 by The American Institute of Architects. All rights reserved.
WARNING: This AIA® Document is protected by U.S. Copyright Law and International Treaties. Unauthorized reproduction or distribution of this AIA® Document, or any portion of it, may result in severe civil and criminal penalties, and will be prosecuted to the maximum extent possible under the law.
This document was produced by AIA software at 15:41:29 on 04/01/2013 under Order No.3625291867_1 which expires on 08/10/2013, and is not for resale.
User Notes: (1634944628)

§ 10.1.2 In the event of termination of this Agreement pursuant to Section 10.1.1, the Baldwin & Shell Construction Company shall be equitably compensated for Preconstruction Phase services performed prior to receipt of a notice of termination. In no event shall the Baldwin & Shell Construction Company's compensation under this Section exceed the compensation set forth in Section 4.1.

§ 10.1.3 If the City of Fayetteville terminates the Contract pursuant to Section 10.1.1 after the commencement of the Construction Phase but prior to the execution of the Guaranteed Maximum Price Amendment, the City of Fayetteville shall pay to the Baldwin & Shell Construction Company an amount calculated as follows, which amount shall be in addition to any compensation paid to the Baldwin & Shell Construction Company under Section 10.1.2:

.1 Take the Cost of the Work incurred by the Baldwin & Shell Construction Company to the date of termination;

.2 Add the Baldwin & Shell Construction Company's Fee computed upon the Cost of the Work to the date of termination at the rate stated in Section 5.1 or, if the Baldwin & Shell Construction Company's Fee is stated as a fixed sum in that Section, an amount that bears the same ratio to that fixed-sum Fee as the Cost of the Work at the time of termination bears to a reasonable estimate of the probable Cost of the Work upon its completion; and

.3 Subtract the aggregate of previous payments made by the City of Fayetteville for Construction Phase services.

The City of Fayetteville shall also pay the Baldwin & Shell Construction Company fair compensation, either by purchase or rental at the election of the City of Fayetteville, for any equipment owned by the Baldwin & Shell Construction Company which the City of Fayetteville elects to retain and which is not otherwise included in the Cost of the Work under Section 10.1.3.1. To the extent that the City of Fayetteville elects to take legal assignment of subcontracts and purchase orders (including rental agreements), the Baldwin & Shell Construction Company shall, as a condition of receiving the payments referred to in this Article 10, execute and deliver all such papers and take all such steps, including the legal assignment of such subcontracts and other contractual rights of the Baldwin & Shell Construction Company, as the City of Fayetteville may require for the purpose of fully vesting in the City of Fayetteville the rights and benefits of the Baldwin & Shell Construction Company under such subcontracts or purchase orders. All Subcontracts, purchase orders and rental agreements entered into by the Baldwin & Shell Construction Company will contain provisions allowing for assignment to the City of Fayetteville as described above.

If the City of Fayetteville accepts assignment of subcontracts, purchase orders or rental agreements as described above, the City of Fayetteville will reimburse or indemnify the Baldwin & Shell Construction Company for all costs arising under the subcontract, purchase order or rental agreement, if those costs would have been reimbursable as Cost of the Work if the contract had not been terminated. If the City of Fayetteville chooses not to accept assignment of any subcontract, purchase order or rental agreement that would have constituted a Cost of the Work had this agreement not been terminated, the Baldwin & Shell Construction Company will terminate the subcontract, purchase order or rental agreement and the City of Fayetteville will pay the Baldwin & Shell Construction Company the costs necessarily incurred by the Baldwin & Shell Construction Company because of such termination.

§ 10.2 Termination Subsequent to Establishing Guaranteed Maximum Price

Following execution of the Guaranteed Maximum Price Amendment and subject to the provisions of Section 10.2.1 and 10.2.2 below, the Contract may be terminated as provided in Article 14 of AIA Document A201–2007.

§ 10.2.1 If the City of Fayetteville terminates the Contract after execution of the Guaranteed Maximum Price Amendment, the amount payable to the Baldwin & Shell Construction Company pursuant to Sections 14.2 and 14.4 of A201–2007 shall not exceed the amount the Baldwin & Shell Construction Company would otherwise have received pursuant to Sections 10.1.2 and 10.1.3 of this Agreement.

§ 10.2.2 If the Baldwin & Shell Construction Company terminates the Contract after execution of the Guaranteed Maximum Price Amendment, the amount payable to the Baldwin & Shell Construction Company under Section 14.1.3 of A201–2007 shall not exceed the amount the Baldwin & Shell Construction Company would otherwise have received under Sections 10.1.2 and 10.1.3 above, except that the Baldwin & Shell Construction Company's Fee shall be calculated as if the Work had been fully completed by the Baldwin & Shell Construction Company, utilizing as necessary a reasonable estimate of the Cost of the Work for Work not actually completed.

Init.
/
AIA Document A133™ – 2009 (formerly A121™CMc – 2003). Copyright © 1991, 2003 and 2009 by The American Institute of Architects. All rights reserved.
WARNING: This AIA® Document is protected by U.S. Copyright Law and International Treaties. Unauthorized reproduction or distribution of this AIA® Document, or any portion of it, may result in severe civil and criminal penalties, and will be prosecuted to the maximum extent possible under the law.
This document was produced by AIA software at 15:41:29 on 04/01/2013 under Order No.3625291867_1 which expires on 08/10/2013, and is not for resale.
User Notes: (1634944628)

§ 10.3 Suspension
The Work may be suspended by the City of Fayetteville as provided in Article 14 of AIA Document A201–2007. In such case, the Guaranteed Maximum Price and Contract Time shall be increased as provided in Section 14.3.2 of AIA Document A201–2007, except that the term "profit" shall be understood to mean the Baldwin & Shell Construction Company's Fee as described in Sections 5.1 and 5.3.5 of this Agreement.

ARTICLE 11 MISCELLANEOUS PROVISIONS
§ 11.1 Terms in this Agreement shall have the same meaning as those in A201–2007.

§ 11.2 City of Fayetteville and Use of Documents
Section 1.5 of A201–2007 shall apply to both the Preconstruction and Construction Phases.

§ 11.3 Governing Law
Section 13.1 of A201–2007 shall apply to both the Preconstruction and Construction Phases.

§ 11.4 Assignment
The City of Fayetteville and Baldwin & Shell Construction Company, respectively, bind themselves, their agents, successors, assigns and legal representatives to this Agreement. Neither the City of Fayetteville nor the Baldwin & Shell Construction Company shall assign this Agreement without the written consent of the other, except that the City of Fayetteville may assign this Agreement to a lender providing financing for the Project if the lender agrees to assume the City of Fayetteville's rights and obligations under this Agreement. Except as provided in Section 13.2.2 of A201–2007, neither party to the Contract shall assign the Contract as a whole without written consent of the other. If either party attempts to make such an assignment without such consent, that party shall nevertheless remain legally responsible for all obligations under the Contract.

§ 11.5 Other provisions:

§ 11.5.1 Solid Waste Services. Solid Waste Services shall be obtained from the City of Fayetteville Solid Waste Division, at Baldwin & Shell's expense, unless such services cannot be provided by the City of Fayetteville Solid Waste Division.

§ 11.5.2 Computer Models. Baldwin & Shell may use or modify Baldwin & Shell's proprietary computer models in service of City of Fayetteville under this agreement, or Baldwin & Shell may develop computer models during Baldwin & Shell's service to City of Fayetteville under this agreement. Such use, modification, or development by Baldwin & Shell does not constitute a license to City of Fayetteville to use or modify Baldwin & Shell's computer models. Said proprietary computer models shall remain the sole property of Baldwin & Shell. City of Fayetteville and Baldwin & Shell will enter into a separate license agreement if City of Fayetteville wishes to use Baldwin & Shell's computer models.

§ 11.5.3 Baldwin & Shell. agrees that it will indemnify, defend, and hold harmless the City of Fayetteville and the Engineer from and against any and all loss where loss is caused or incurred or alleged to be caused or incurred in whole or in part as a result of the negligence or other actionable fault of Baldwin & Shell, its employees, agents, Subcontractors, and Suppliers

§ 11.5.4 Arkansas Freedom of Information Act. City contracts and documents, including internal documents and documents of subcontractors and sub-consultants, prepared while performing City contractual work are subject to the Arkansas Freedom of Information Act (FOIA). If a Freedom of Information Act request is presented to the City of Fayetteville, Baldwin & Shell will do everything possible to provide the documents in a prompt and timely manner as prescribed in the Arkansas Freedom of Information Act (A.C.A. §25-19-101 et seq.). Only legally authorized photocopying costs pursuant to the FOIA may be assessed for this compliance.

§ 11.5.5 Changes, modifications or amendments. Changes, modifications or amendments in scope, price or fees to this Contract shall **not** be allowed without formal contract amendment approved by the Mayor and the City Council **in advance** of the change in scope, cost, fees, or delivery schedule.

AIA Document A133™ – 2009 (formerly A121™CMc – 2003). Copyright © 1991, 2003 and 2009 by The American Institute of Architects. All rights reserved.
WARNING: This AIA® Document is protected by U.S. Copyright Law and International Treaties. Unauthorized reproduction or distribution of this AIA® Document, or any portion of it, may result in severe civil and criminal penalties, and will be prosecuted to the maximum extent possible under the law.
This document was produced by AIA software at 15:41:29 on 04/01/2013 under Order No.3625291867_1 which expires on 08/10/2013, and is not for resale.
User Notes: (1634944628)

ARTICLE 12 SCOPE OF THE AGREEMENT

§ 12.1 This Agreement represents the entire and integrated agreement between the City of Fayetteville and the Baldwin & Shell Construction Company and supersedes all prior negotiations, representations or agreements, either written or oral. This Agreement may be amended only by written instrument signed by both City of Fayetteville and Baldwin & Shell Construction Company.

§ 12.2 The following documents comprise the Agreement:

.1 AIA Document A133–2009, Standard Form of Agreement Between City of Fayetteville and Baldwin & Shell Construction Company as Constructor where the basis of payment is the Cost of the Work Plus a Fee with a Guaranteed Maximum Price

.2 AIA Document A201–2007, General Conditions of the Contract for Construction

.3 AIA Document E201™–2007, Digital Data Protocol Exhibit, if completed, or the following:

.4 AIA Document E202™–2008, Building Information Modeling Protocol Exhibit, if completed, or the following:

.5 Other documents:
(List other documents, if any, forming part of the Agreement.)

This Agreement is entered into as of the day and year first written above.

CITY OF FAYETTEVILLE *(Signature)*	**BALDWIN & SHELL CONSTRUCTION COMPANY** *(Signature)*
Lionleld Jordan, Mayor	Patrick Tenney, Vice-President
	(Printed name and title)
ATTEST:	
Sandra Smith, City Clerk	Debbie Pangle, Administrative Assistant

CITY CLERK / TREASURER CITY OF FAYETTEVILLE ARKANSAS WASHINGTON COUNTY

Debbie Pangle
Notary Public-Arkansas
Benton County
My Comm. Exp. 12-13-2014

AIA Document A133™ – 2009 (formerly A121™CMc – 2003). Copyright © 1991, 2003 and 2009 by The American Institute of Architects. All rights reserved.
WARNING: This AIA® Document is protected by U.S. Copyright Law and International Treaties. Unauthorized reproduction or distribution of this AIA® Document, or any portion of it, may result in severe civil and criminal penalties, and will be prosecuted to the maximum extent possible under the law.
This document was produced by AIA software at 15:41:29 on 04/01/2013 under Order No.3625291867_1 which expires on 08/10/2013, and is not for resale.
User Notes: (1634944628)

Certification of Document's Authenticity

AIA® Document D401™ – 2003

I, Patrick Tenney, AIA, Vice President, hereby certify, to the best of my knowledge, information and belief, that I created the attached final document simultaneously with its associated Additions and Deletions Report and this certification at 15:15:38 on 04/01/2013 under Order No. 3625291867_1 from AIA Contract Documents software and that in preparing the attached final document I made no changes to the original text of AIA® Document A133™ – 2009, Standard Form of Agreement Between Owner and Construction Manager as Constructor where the basis of payment is the Cost of the Work Plus a Fee with a Guaranteed Maximum Price, as published by the AIA in its software, other than those additions and deletions shown in the associated Additions and Deletions Report.

Patrick Tenney
(Signed)

VICE PRESIDENT
(Title)

4·2·2013
(Dated)

AIA Document D401™ – 2003. Copyright © 1992 and 2003 by The American Institute of Architects. All rights reserved. WARNING: This AIA® Document is protected by U.S. Copyright Law and International Treaties. Unauthorized reproduction or distribution of this AIA® Document, or any portion of it, may result in severe civil and criminal penalties, and will be prosecuted to the maximum extent possible under the law. This document was produced by AIA software at 15:15:38 on 04/01/2013 under Order No.3625291867_1 which expires on 08/10/2013, and is not for resale.
User Notes: (1766737747)

AIA® Document A201™ – 2007

General Conditions of the Contract for Construction

for the following PROJECT:
(Name and location or address)
City of Fayetteville Entertainment District Parking Deck in the vicinity of South School Avenue & Spring Street, Fayetteville, Arkansas consisting of the Parking Deck Liner Buildings for the City of Fayetteville & Walton Arts Center

THE OWNER:
(Name, legal status and address)
City of Fayetteville
113 W. Mountain
Fayetteville, Arkansas 72701
herein after referred to as the City of Fayetteville

THE ARCHITECT:
(Name, legal status and address)
Garver, LLC.
2049 E. Joyce Blvd., Ste 400
Fayetteville, AR 72703

ADDITIONS AND DELETIONS:
The author of this document has added information needed for its completion. The author may also have revised the text of the original AIA standard form. An *Additions and Deletions Report* that notes added information as well as revisions to the standard form text is available from the author and should be reviewed. A vertical line in the left margin of this document indicates where the author has added necessary information and where the author has added to or deleted from the original AIA text.

This document has important legal consequences. Consultation with an attorney is encouraged with respect to its completion or modification.

TABLE OF ARTICLES

1 GENERAL PROVISIONS

2 OWNER

3 CONTRACTOR

4 ARCHITECT

5 SUBCONTRACTORS

6 CONSTRUCTION BY OWNER OR BY SEPARATE CONTRACTORS

7 CHANGES IN THE WORK

8 TIME

9 PAYMENTS AND COMPLETION

10 PROTECTION OF PERSONS AND PROPERTY

11 INSURANCE AND BONDS

12 UNCOVERING AND CORRECTION OF WORK

AIA Document A201™ – 2007. Copyright © 1911, 1915, 1918, 1925, 1937, 1951, 1958, 1961, 1963, 1966, 1970, 1976, 1987, 1997 and 2007 by The American Institute of Architects. All rights reserved. WARNING: This AIA® Document is protected by U.S. Copyright Law and International Treaties. Unauthorized reproduction or distribution of this AIA® Document, or any portion of it, may result in severe civil and criminal penalties, and will be prosecuted to the maximum extent possible under the law. This document was produced by AIA software at 16:08:16 on 04/01/2013 under Order No.3625291867_1 which expires on 08/10/2013, and is not for resale.
User Notes: (1162498114)

13 MISCELLANEOUS PROVISIONS

14 TERMINATION OR SUSPENSION OF THE CONTRACT

15 CLAIMS AND DISPUTES

Init.
/

AIA Document A201™ – 2007. Copyright © 1911, 1915, 1918, 1925, 1937, 1951, 1958, 1961, 1963, 1966, 1970, 1976, 1987, 1997 and 2007 by The American Institute of Architects. All rights reserved. WARNING: This AIA® Document is protected by U.S. Copyright Law and International Treaties. Unauthorized reproduction or distribution of this AIA® Document, or any portion of it, may result in severe civil and criminal penalties, and will be prosecuted to the maximum extent possible under the law. This document was produced by AIA software at 16:08:16 on 04/01/2013 under Order No.3625291867_1 which expires on 08/10/2013, and is not for resale.
User Notes: (1162498114)

INDEX
(Numbers and Topics in Bold are Section Headings)

Acceptance of Nonconforming Work
9.6.6, 9.9.3, **12.3**
Acceptance of Work
9.6.6, 9.8.2, 9.9.3, 9.10.1, 9.10.3, 12.3
Access to Work
3.16, 6.2.1, 12.1
Accident Prevention
10
Acts and Omissions
3.2, 3.3.2, 3.12.8, 3.18, 4.2.3, 8.3.1, 9.5.1, 10.2.5, 10.2.8, 13.4.2, 13:7.1, 14.1, 15.2
Addenda
1.1.1, 3.11.1
Additional Costs, Claims for
3.7.4, 3.7.5, 6.1.1, 7.3.7.5, 10.3, 15.1.4
Additional Inspections and Testing
9.4.2, 9.8.3, 12.2.1, **13.5**
Additional Insured
11.1.4
Additional Time, Claims for
3.2.4, 3.7.4, 3.7.5, 3.10.2, 8.3.2, **15.1.5**
Administration of the Contract
3.1.3, **4.2**, 9.4, 9.5
Advertisement or Invitation to Bid
1.1.1
Aesthetic Effect
4.2.13
Allowances
3.8, 7.3.8
All-risk Insurance
11.3.1, 11.3.1.1
Applications for Payment
4.2.5, 7.3.9, 9.2, **9.3**, 9.4, 9.5.1, 9.6.3, 9.7.1, 9.10, 11.1.3
Approvals
2.1.1, 2.2.2, 2.4, 3.1.3, 3.10.2, 3.12.8, 3.12.9, 3.12.10, 4.2.7, 9.3.2, 13.5.1
Arbitration
8.3.1, 11.3.10, 13.1.1, 15.3.2, **15.4**
ARCHITECT
4
Architect, Definition of
4.1.1
Architect, Extent of Authority
2.4.1, 3.12.7, 4.1, 4.2, 5.2, 6.3.1, 7.1.2, 7.3.7, 7.4, 9.2.1, 9.3.1, 9.4, 9.5, 9.6.3, 9.8, 9.10.1, 9.10.3, 12.1, 12.2.1, 13.5.1, 13.5.2, 14.2.2, 14.2.4, 15.1.3, 15.2.1
Architect, Limitations of Authority and Responsibility
2.1.1, 3.12.4, 3.12.8, 3.12.10, 4.1.2, 4.2.1, 4.2.2, 4.2.3, 4.2.6, 4.2.7, 4.2.10, 4.2.12, 4.2.13, 5.2.1, 7.4.1, 9.4.2, 9.5.3, 9.6.4, 15.1.3, 15.2
Architect's Additional Services and Expenses
2.4.1, 11.3.1.1, 12.2.1, 13.5.2, 13.5.3, 14.2.4
Architect's Administration of the Contract
3.1.3, 4.2, 3.7.4, 15.2, 9.4.1, 9.5
Architect's Approvals
2.4.1, 3.1.3, 3.5.1, 3.10.2, 4.2.7
Architect's Authority to Reject Work
3.5.1, 4.2.6, 12.1.2, 12.2.1
Architect's Copyright
1.1.7, 1.5
Architect's Decisions
3.7.4, 4.2.6, 4.2.7, 4.2.11, 4.2.12, 4.2.13, 4.2.14, 6.3.1, 7.3.7, 7.3.9, 8.1.3, 8.3.1, 9.2.1, 9.4.1, 9.5, 9.8.4, 9.9.1, 13.5.2, 15.2, 15.3
Architect's Inspections
3.7.4, 4.2.2, 4.2.9, 9.4.2, 9.8.3, 9.9.2, 9.10.1, 13.5
Architect's Instructions
3.2.4, 3.3.1, 4.2.6, 4.2.7, 13.5.2
Architect's Interpretations
4.2.11, 4.2.12
Architect's Project Representative
4.2.10
Architect's Relationship with Contractor
1.1.2, 1.5, 3.1.3, 3.2.2, 3.2.3, 3.2.4, 3.3.1, 3.4.2, 3.5.1, 3.7.4, 3.7.5, 3.9.2, 3.9.3, 3.10, 3.11, 3.12, 3.16, 3.18, 4.1.2, 4.1.3, 4.2, 5.2, 6.2.2, 7, 8.3.1, 9.2, 9.3, 9.4, 9.5, 9.7, 9.8, 9.9, 10.2.6, 10.3, 11.3.7, 12, 13.4.2, 13.5, 15.2

Architect's Relationship with Subcontractors
1.1.2, 4.2.3, 4.2.4, 4.2.6, 9.6.3, 9.6.4, 11.3.7
Architect's Representations
9.4.2, 9.5.1, 9.10.1
Architect's Site Visits
3.7.4, 4.2.2, 4.2.9, 9.4.2, 9.5.1, 9.9.2, 9.10.1, 13.5
Asbestos
10.3.1
Attorneys' Fees
3.18.1, 9.10.2, 10.3.3
Award of Separate Contracts
6.1.1, 6.1.2
Award of Subcontracts and Other Contracts for Portions of the Work
5.2
Basic Definitions
1.1
Bidding Requirements
1.1.1, 5.2.1, 11.4.1
Binding Dispute Resolution
9.7.1, 11.3.9, 11.3.10, 13.1.1, 15.2.5, 15.2.6.1, 15.3.1, 15.3.2, 15.4.1
Boiler and Machinery Insurance
11.3.2
Bonds, Lien
7.3.7.4, 9.10.2, 9.10.3
Bonds, Performance, and Payment
7.3.7.4, 9.6.7, 9.10.3, 11.3.9, **11.4**

AIA Document A201™ – 2007. Copyright © 1911, 1915, 1918, 1925, 1937, 1951, 1958, 1961, 1963, 1966, 1970, 1976, 1987, 1997 and 2007 by The American Institute of Architects. All rights reserved. WARNING: This AIA® Document is protected by U.S. Copyright Law and International Treaties. Unauthorized reproduction or distribution of this AIA® Document, or any portion of it, may result in severe civil and criminal penalties, and will be prosecuted to the maximum extent possible under the law. This document was produced by AIA software at 16:08:16 on 04/01/2013 under Order No.3625291867_1 which expires on 08/10/2013, and is not for resale.
User Notes:

Building Permit
3.7.1
Capitalization
1.3
Certificate of Substantial Completion
9.8.3, 9.8.4, 9.8.5
Certificates for Payment
4.2.1, 4.2.5, 4.2.9, 9.3.3, **9.4**, 9.5, 9.6.1, 9.6.6, 9.7.1, 9.10.1, 9.10.3, 14.1.1.3, 14.2.4, 15.1.3
Certificates of Inspection, Testing or Approval
13.5.4
Certificates of Insurance
9.10.2, 11.1.3
Change Orders
1.1.1, 2.4.1, 3.4.2, 3.7.4, 3.8.2.3, 3.11.1, 3.12.8, 4.2.8, 5.2.3, 7.1.2, 7.1.3, **7.2**, 7.3.2, 7.3.6, 7.3.9, 7.3.10, 8.3.1, 9.3.1.1, 9.10.3, 10.3.2, 11.3.1.2, 11.3.4, 11.3.9, 12.1.2, 15.1.3
Change Orders, Definition of
7.2.1
CHANGES IN THE WORK
2.2.1, 3.11, 4.2.8, 7, 7.2.1, 7.3.1, 7.4, 7.4.1, 8.3.1, 9.3.1.1, 11.3.9
Claims, Definition of
15.1.1
CLAIMS AND DISPUTES
3.2.4, 6.1.1, 6.3.1, 7.3.9, 9.3.3, 9.10.4, 10.3.3, **15**, 15.4

Claims and Timely Assertion of Claims
15.4.1
Claims for Additional Cost
3.2.4, 3.7.4, 6.1.1, 7.3.9, 10.3.2, **15.1.4**
Claims for Additional Time
3.2.4, 3.7.46.1.1, 8.3.2, 10.3.2, **15.1.5**
Concealed or Unknown Conditions, Claims for
3.7.4
Claims for Damages
3.2.4, 3.18, 6.1.1, 8.3.3, 9.5.1, 9.6.7, 10.3.3, 11.1.1, 11.3.5, 11.3.7, 14.1.3, 14.2.4, 15.1.6
Claims Subject to Arbitration
15.3.1, 15.4.1
Cleaning Up
3.15, 6.3
Commencement of the Work, Conditions Relating to
2.2.1, 3.2.2, 3.4.1, 3.7.1, 3.10.1, 3.12.6, 5.2.1, 5.2.3, 6.2.2, 8.1.2, 8.2.2, 8.3.1, 11.1, 11.3.1, 11.3.6, 11.4.1, 15.1.4
Commencement of the Work, Definition of
8.1.2
Communications Facilitating Contract Administration
3.9.1, **4.2.4**
Completion, Conditions Relating to
3.4.1, 3.11, 3.15, 4.2.2, 4.2.9, 8.2, 9.4.2, 9.8, 9.9.1, 9.10, 12.2, 13.7, 14.1.2
COMPLETION, PAYMENTS AND
9
Completion, Substantial
4.2.9, 8.1.1, 8.1.3, 8.2.3, 9.4.2, 9.8, 9.9.1, 9.10.3, 12.2, 13.7
Compliance with Laws
1.6.1, 3.2.3, 3.6, 3.7, 3.12.10, 3.13, 4.1.1, 9.6.4, 10.2.2, 11.1, 11.3, 13.1, 13.4, 13.5.1, 13.5.2, 13.6, 14.1.1, 14.2.1.3, 15.2.8, 15.4.2, 15.4.3
Concealed or Unknown Conditions
3.7.4, 4.2.8, 8.3.1, 10.3
Conditions of the Contract
1.1.1, 6.1.1, 6.1.4
Consent, Written
3.4.2, 3.7.4, 3.12.8, 3.14.2, 4.1.2, 9.3.2, 9.8.5, 9.9.1, 9.10.2, 9.10.3, 11.3.1, 13.2, 13.4.2, 15.4.4.2
Consolidation or Joinder
15.4.4
CONSTRUCTION BY OWNER OR BY SEPARATE CONTRACTORS
1.1.4, **6**
Construction Change Directive, Definition of
7.3.1
Construction Change Directives
1.1.1, 3.4.2, 3.12.8, 4.2.8, 7.1.1, 7.1.2, 7.1.3, **7.3**, 9.3.1.1
Construction Schedules, Contractor's
3.10, 3.12.1, 3.12.2, 6.1.3, 15.1.5.2
Contingent Assignment of Subcontracts
5.4, 14.2.2.2
Continuing Contract Performance
15.1.3
Contract, Definition of
1.1.2
CONTRACT, TERMINATION OR SUSPENSION OF THE
5.4.1.1, 11.3.9, **14**
Contract Administration
3.1.3, 4, 9.4, 9.5
Contract Award and Execution, Conditions Relating to
3.7.1, 3.10, 5.2, 6.1, 11.1.3, 11.3.6, 11.4.1
Contract Documents, The
1.1.1
Contract Documents, Copies Furnished and Use of
1.5.2, 2.2.5, 5.3
Contract Documents, Definition of
1.1.1
Contract Sum
3.7.4, 3.8, 5.2.3, 7.2, 7.3, 7.4, **9.1**, 9.4.2, 9.5.1.4, 9.6.7, 9.7, 10.3.2, 11.3.1, 14.2.4, 14.3.2, 15.1.4, 15.2.5
Contract Sum, Definition of
9.1
Contract Time
3.7.4, 3.7.5, 3.10.2, 5.2.3, 7.2.1.3, 7.3.1, 7.3.5, 7.4, 8.1.1, 8.2.1, 8.3.1, 9.5.1, 9.7.1, 10.3.2, 12.1.1, 14.3.2, 15.1.5.1, 15.2.5
Contract Time, Definition of
8.1.1

AIA Document A201™ – 2007. Copyright © 1911, 1915, 1918, 1925, 1937, 1951, 1958, 1961, 1963, 1966, 1970, 1976, 1987, 1997 and 2007 by The American Institute of Architects. All rights reserved. WARNING: This AIA® Document is protected by U.S. Copyright Law and International Treaties. Unauthorized reproduction or distribution of this AIA® Document, or any portion of it, may result in severe civil and criminal penalties, and will be prosecuted to the maximum extent possible under the law. This document was produced by AIA software at 16:08:16 on 04/01/2013 under Order No.3625291867_1 which expires on 08/10/2013, and is not for resale.
User Notes:
(1162498114)

CONTRACTOR
3
Contractor, Definition of
3.1, 6.1.2
Contractor's Construction Schedules
3.10, 3.12.1, 3.12.2, 6.1.3, 15.1.5.2
Contractor's Employees
3.3.2, 3.4.3, 3.8.1, 3.9, 3.18.2, 4.2.3, 4.2.6, 10.2, 10.3, 11.1.1, 11.3.7, 14.1, 14.2.1.1,
Contractor's Liability Insurance
11.1
Contractor's Relationship with Separate Contractors and Owner's Forces
3.12.5, 3.14.2, 4.2.4, 6, 11.3.7, 12.1.2, 12.2.4
Contractor's Relationship with Subcontractors
1.2.2, 3.3.2, 3.18.1, 3.18.2, 5, 9.6.2, 9.6.7, 9.10.2, 11.3.1.2, 11.3.7, 11.3.8
Contractor's Relationship with the Architect
1.1.2, 1.5, 3.1.3, 3.2.2, 3.2.3, 3.2.4, 3.3.1, 3.4.2, 3.5.1, 3.7.4, 3.10, 3.11, 3.12, 3.16, 3.18, 4.1.3, 4.2, 5.2, 6.2.2, 7, 8.3.1, 9.2, 9.3, 9.4, 9.5, 9.7, 9.8, 9.9, 10.2.6, 10.3, 11.3.7, 12, 13.5, 15.1.2, 15.2.1
Contractor's Representations
3.2.1, 3.2.2, 3.5.1, 3.12.6, 6.2.2, 8.2.1, 9.3.3, 9.8.2
Contractor's Responsibility for Those Performing the Work
3.3.2, 3.18, 5.3.1, 6.1.3, 6.2, 9.5.1, 10.2.8
Contractor's Review of Contract Documents
3.2
Contractor's Right to Stop the Work
9.7
Contractor's Right to Terminate the Contract
14.1, 15.1.6
Contractor's Submittals
3.10, 3.11, 3.12.4, 4.2.7, 5.2.1, 5.2.3, 9.2, 9.3, 9.8.2, 9.8.3, 9.9.1, 9.10.2, 9.10.3, 11.1.3, 11.4.2
Contractor's Superintendent
3.9, 10.2.6
Contractor's Supervision and Construction Procedures
1.2.2, 3.3, 3.4, 3.12.10, 4.2.2, 4.2.7, 6.1.3, 6.2.4, 7.1.3, 7.3.5, 7.3.7, 8.2, 10, 12, 14, 15.1.3
Contractual Liability Insurance
11.1.1.8, 11.2
Coordination and Correlation
1.2, 3.2.1, 3.3.1, 3.10, 3.12.6, 6.1.3, 6.2.1
Copies Furnished of Drawings and Specifications
1.5, 2.2.5, 3.11
Copyrights
1.5, **3.17**
Correction of Work
2.3, 2.4, 3.7.3, 9.4.2, 9.8.2, 9.8.3, 9.9.1, 12.1.2, **12.2**
Correlation and Intent of the Contract Documents
1.2
Cost, Definition of
7.3.7
Costs
2.4.1, 3.2.4, 3.7.3, 3.8.2, 3.15.2, 5.4.2, 6.1.1, 6.2.3, 7.3.3.3, 7.3.7, 7.3.8, 7.3.9, 9.10.2, 10.3.2, 10.3.6, 11.3, 12.1.2, 12.2.1, 12.2.4, 13.5, 14
Cutting and Patching
3.14, 6.2.5
Damage to Construction of Owner or Separate Contractors
3.14.2, 6.2.4, 10.2.1.2, 10.2.5, 10.4, 11.1.1, 11.3, 12.2.4
Damage to the Work
3.14.2, 9.9.1, 10.2.1.2, 10.2.5, 10.4.1, 11.3.1, 12.2.4
Damages, Claims for
3.2.4, 3.18, 6.1.1, 8.3.3, 9.5.1, 9.6.7, 10.3.3, 11.1.1, 11.3.5, 11.3.7, 14.1.3, 14.2.4, 15.1.6
Damages for Delay
6.1.1, 8.3.3, 9.5.1.6, 9.7, 10.3.2
Date of Commencement of the Work, Definition of
8.1.2
Date of Substantial Completion, Definition of
8.1.3
Day, Definition of
8.1.4
Decisions of the Architect
3.7.4, 4.2.6, 4.2.7, 4.2.11, 4.2.12, 4.2.13, 15.2, 6.3, 7.3.7, 7.3.9, 8.1.3, 8.3.1, 9.2.1, 9.4, 9.5.1, 9.8.4, 9.9.1, 13.5.2, 14.2.2, 14.2.4, 15.1, 15.2
Decisions to Withhold Certification
9.4.1, **9.5**, 9.7, 14.1.1.3
Defective or Nonconforming Work, Acceptance, Rejection and Correction of
2.3.1, 2.4.1, 3.5.1, 4.2.6, 6.2.5, 9.5.1, 9.5.2, 9.6.6, 9.8.2, 9.9.3, 9.10.4, 12.2.1
Defective Work, Definition of
3.5.1
Definitions
1.1, 2.1.1, 3.1.1, 3.5.1, 3.12.1, 3.12.2, 3.12.3, 4.1.1, 15.1.1, 5.1, 6.1.2, 7.2.1, 7.3.1, 8.1, 9.1, 9.8.1
Delays and Extensions of Time
3.2., 3.7.4, 5.2.3, 7.2.1, 7.3.1, 7.4.1, **8.3**, 9.5.1, 9.7.1, 10.3.2, 10.4.1, 14.3.2, 15.1.5, 15.2.5
Disputes
6.3.1, 7.3.9, 15.1, 15.2
Documents and Samples at the Site
3.11
Drawings, Definition of
1.1.5
Drawings and Specifications, Use and Ownership of
3.11
Effective Date of Insurance
8.2.2, 11.1.2
Emergencies
10.4, 14.1.1.2, 15.1.4
Employees, Contractor's
3.3.2, 3.4.3, 3.8.1, 3.9, 3.18.2, 4.2.3, 4.2.6, 10.2, 10.3.3, 11.1.1, 11.3.7, 14.1, 14.2.1.1

AIA Document A201™ – 2007. Copyright © 1911, 1915, 1918, 1925, 1937, 1951, 1958, 1961, 1963, 1966, 1970, 1976, 1987, 1997 and 2007 by The American Institute of Architects. All rights reserved. WARNING: This AIA® Document is protected by U.S. Copyright Law and International Treaties. Unauthorized reproduction or distribution of this AIA® Document, or any portion of it, may result in severe civil and criminal penalties, and will be prosecuted to the maximum extent possible under the law. This document was produced by AIA software at 16:08:16 on 04/01/2013 under Order No.3625291867_1 which expires on 08/10/2013, and is not for resale.
User Notes:
(1162498114)

Equipment, Labor, Materials or
1.1.3, 1.1.6, 3.4, 3.5.1, 3.8.2, 3.8.3, 3.12, 3.13.1, 3.15.1, 4.2.6, 4.2.7, 5.2.1, 6.2.1, 7.3.7, 9.3.2, 9.3.3, 9.5.1.3, 9.10.2, 10.2.1, 10.2.4, 14.2.1.1, 14.2.1.2
Execution and Progress of the Work
1.1.3, 1.2.1, 1.2.2, 2.2.3, 2.2.5, 3.1, 3.3.1, 3.4.1, 3.5.1, 3.7.1, 3.10.1, 3.12, 3.14, 4.2, 6.2.2, 7.1.3, 7.3.5, 8.2, 9.5.1, 9.9.1, 10.2, 10.3, 12.2, 14.2, 14.3.1, 15.1.3
Extensions of Time
3.2.4, 3.7.4, 5.2.3, 7.2.1, 7.3, 7.4.1, 9.5.1, 9.7.1, 10.3.2, 10.4.1, 14.3, 15.1.5, 15.2.5
Failure of Payment
9.5.1.3, **9.7**, 9.10.2, 13.6, 14.1.1.3, 14.2.1.2
Faulty Work
(See Defective or Nonconforming Work)
Final Completion and Final Payment
4.2.1, 4.2.9, 9.8.2, **9.10**, 11.1.2, 11.1.3, 11.3.1, 11.3.5, 12.3.1, 14.2.4, 14.4.3
Financial Arrangements, Owner's
2.2.1, 13.2.2, 14.1.1.4
Fire and Extended Coverage Insurance
11.3.1.1
GENERAL PROVISIONS
1
Governing Law
13.1
Guarantees (See Warranty)
Hazardous Materials
10.2.4, **10.3**
Identification of Subcontractors and Suppliers
5.2.1
Indemnification
3.17.1, **3.18**, 9.10.2, 10.3.3, 10.3.5, 10.3.6, 11.3.1.2, 11.3.7
Information and Services Required of the Owner
2.1.2, **2.2**, 3.2.2, 3.12.4, 3.12.10, 6.1.3, 6.1.4, 6.2.5, 9.6.1, 9.6.4, 9.9.2, 9.10.3, 10.3.3, 11.2, 11.4, 13.5.1, 13.5.2, 14.1.1.4, 14.1.4, 15.1.3
Initial Decision
15.2
Initial Decision Maker, Definition of
1.1.8
Initial Decision Maker, Decisions
14.2.2, 14.2.4, 15.2.1, 15.2.2, 15.2.3, 15.2.4, 15.2.5
Initial Decision Maker, Extent of Authority
14.2.2, 14.2.4, 15.1.3, 15.2.1, 15.2.2, 15.2.3, 15.2.4, 15.2.5
Injury or Damage to Person or Property
10.2.8, 10.4.1
Inspections
3.1.3, 3.3.3, 3.7.1, 4.2.2, 4.2.6, 4.2.9, 9.4.2, 9.8.3, 9.9.2, 9.10.1, 12.2.1, 13.5
Instructions to Bidders
1.1.1
Instructions to the Contractor
3.2.4, 3.3.1, 3.8.1, 5.2.1, 7, 8.2.2, 12, 13.5.2
Instruments of Service, Definition of
1.1.7
Insurance
3.18.1, 6.1.1, 7.3.7, 9.3.2, 9.8.4, 9.9.1, 9.10.2, **11**
Insurance, Boiler and Machinery
11.3.2
Insurance, Contractor's Liability
11.1
Insurance, Effective Date of
8.2.2, 11.1.2
Insurance, Loss of Use
11.3.3
Insurance, Owner's Liability
11.2
Insurance, Property
10.2.5, **11.3**
Insurance, Stored Materials
9.3.2, 11.4.1.4
INSURANCE AND BONDS
11
Insurance Companies, Consent to Partial Occupancy
9.9.1, 11.4.1.5
Insurance Companies, Settlement with
11.4.10
Intent of the Contract Documents
1.2.1, 4.2.7, 4.2.12, 4.2.13, 7.4
Interest
13.6
Interpretation
1.2.3, **1.4**, 4.1.1, 5.1, 6.1.2, 15.1.1
Interpretations, Written
4.2.11, 4.2.12, 15.1.4
Judgment on Final Award
15.4.2
Labor and Materials, Equipment
1.1.3, 1.1.6, **3.4**, 3.5.1, 3.8.2, 3.8.3, 3.12, 3.13, 3.15.1, 4.2.6, 4.2.7, 5.2.1, 6.2.1, 7.3.7, 9.3.2, 9.3.3, 9.5.1.3, 9.10.2, 10.2.1, 10.2.4, 14.2.1.1, 14.2.1.2
Labor Disputes
8.3.1
Laws and Regulations
1.5, 3.2.3, 3.6, 3.7, 3.12.10, 3.13.1, 4.1.1, 9.6.4, 9.9.1, 10.2.2, 11.1.1, 11.3, 13.1.1, 13.4, 13.5.1, 13.5.2, 13.6.1, 14, 15.2.8, 15.4
Liens
2.1.2, 9.3.3, 9.10.2, 9.10.4, 15.2.8
Limitations, Statutes of
12.2.5, 13.7, 15.4.1.1
Limitations of Liability
2.3.1, 3.2.2, 3.5.1, 3.12.10, 3.17.1, 3.18.1, 4.2.6, 4.2.7, 4.2.12, 6.2.2, 9.4.2, 9.6.4, 9.6.7, 10.2.5, 10.3.3, 11.1.2, 11.2, 11.3.7, 12.2.5, 13.4.2
Limitations of Time
2.1.2, 2.2, 2.4, 3.2.2, 3.10, 3.11, 3.12.5, 3.15.1, 4.2.7, 5.2, 5.3.1, 5.4.1, 6.2.4, 7.3, 7.4, 8.2, 9.2.1, 9.3.1, 9.3.3, 9.4.1, 9.5, 9.6, 9.7.1, 9.8, 9.9, 9.10, 11.1.3, 11.3.1.5, 11.3.6, 11.3.10, 12.2, 13.5, 13.7, 14, 15

AIA Document A201™ – 2007. Copyright © 1911, 1915, 1918, 1925, 1937, 1951, 1958, 1961, 1963, 1966, 1970, 1976, 1987, 1997 and 2007 by The American Institute of Architects. All rights reserved. WARNING: This AIA® Document is protected by U.S. Copyright Law and International Treaties. Unauthorized reproduction or distribution of this AIA® Document, or any portion of it, may result in severe civil and criminal penalties, and will be prosecuted to the maximum extent possible under the law. This document was produced by AIA software at 16:08:16 on 04/01/2013 under Order No.3625291867_1 which expires on 08/10/2013, and is not for resale.
User Notes:
(1162498114)

Loss of Use Insurance
11.3.3
Material Suppliers
1.5, 3.12.1, 4.2.4, 4.2.6, 5.2.1, 9.3, 9.4.2, 9.6, 9.10.5
Materials, Hazardous
10.2.4, **10.3**
Materials, Labor, Equipment and
1.1.3, 1.1.6, 1.5.1, 3.4.1, 3.5.1, 3.8.2, 3.8.3, 3.12, 3.13.1, 3.15.1, 4.2.6, 4.2.7, 5.2.1, 6.2.1, 7.3.7, 9.3.2, 9.3.3, 9.5.1.3, 9.10.2, 10.2.1.2, 10.2.4, 14.2.1.1, 14.2.1.2
Means, Methods, Techniques, Sequences and Procedures of Construction
3.3.1, 3.12.10, 4.2.2, 4.2.7, 9.4.2
Mechanic's Lien
2.1.2, 15.2.8
Mediation
8.3.1, 10.3.5, 10.3.6, 15.2.1, 15.2.5, 15.2.6, **15.3**, 15.4.1
Minor Changes in the Work
1.1.1, 3.12.8, 4.2.8, 7.1, **7.4**
MISCELLANEOUS PROVISIONS
13
Modifications, Definition of
1.1.1
Modifications to the Contract
1.1.1, 1.1.2, 3.11, 4.1.2, 4.2.1, 5.2.3, 7, 8.3.1, 9.7.1, 10.3.2, 11.3.1
Mutual Responsibility
6.2
Nonconforming Work, Acceptance of
9.6.6, 9.9.3, **12.3**
Nonconforming Work, Rejection and Correction of
2.3.1, 2.4.1, 3.5.1, 4.2.6, 6.2.4, 9.5.1, 9.8.2, 9.9.3, 9.10.4, 12.2.1
Notice
2.2.1, 2.3.1, 2.4.1, 3.2.4, 3.3.1, 3.7.2, 3.12.9, 5.2.1, 9.7.1, 9.10, 10.2.2, 11.1.3, 11.4.6, 12.2.2.1, 13.3, 13.5.1, 13.5.2, 14.1, 14.2, 15.2.8, 15.4.1
Notice, Written
2.3.1, 2.4.1, 3.3.1, 3.9.2, 3.12.9, 3.12.10, 5.2.1, 9.7.1, 9.10, 10.2.2, 10.3, 11.1.3, 11.3.6, 12.2.2.1, **13.3**, 14, 15.2.8, 15.4.1
Notice of Claims
3.7.4, 4.5, 10.2.8, **15.1.2**, 15.4
Notice of Testing and Inspections
13.5.1, 13.5.2
Observations, Contractor's
3.2, 3.7.4
Occupancy
2.2.2, 9.6.6, 9.8, 11.3.1.5
Orders, Written
1.1.1, 2.3, 3.9.2, 7, 8.2.2, 11.3.9, 12.1, 12.2.2.1, 13.5.2, 14.3.1
OWNER
2
Owner, Definition of
2.1.1
Owner, Information and Services Required of the
2.1.2, **2.2**, 3.2.2, 3.12.10, 6.1.3, 6.1.4, 6.2.5, 9.3.2, 9.6.1, 9.6.4, 9.9.2, 9.10.3, 10.3.3, 11.2, 11.3, 13.5.1, 13.5.2, 14.1.1.4, 14.1.4, 15.1.3
Owner's Authority
1.5, 2.1.1, 2.3.1, 2.4.1, 3.4.2, 3.8.1, 3.12.10, 3.14.2, 4.1.2, 4.1.3, 4.2.4, 4.2.9, 5.2.1, 5.2.4, 5.4.1, 6.1, 6.3.1, 7.2.1, 7.3.1, 8.2.2, 8.3.1, 9.3.1, 9.3.2, 9.5.1, 9.6.4, 9.9.1, 9.10.2, 10.3.2, 11.1.3, 11.3.3, 11.3.10, 12.2.2, 12.3.1, 13.2.2, 14.3, 14.4, 15.2.7
Owner's Financial Capability
2.2.1, 13.2.2, 14.1.1.4
Owner's Liability Insurance
11.2
Owner's Loss of Use Insurance
11.3.3
Owner's Relationship with Subcontractors
1.1.2, 5.2, 5.3, 5.4, 9.6.4, 9.10.2, 14.2.2
Owner's Right to Carry Out the Work
2.4, 14.2.2
Owner's Right to Clean Up
6.3
Owner's Right to Perform Construction and to Award Separate Contracts
6.1
Owner's Right to Stop the Work
2.3
Owner's Right to Suspend the Work
14.3
Owner's Right to Terminate the Contract
14.2
Ownership and Use of Drawings, Specifications and Other Instruments of Service
1.1.1, 1.1.6, 1.1.7, **1.5**, 2.2.5, 3.2.2, 3.11.1, 3.17.1, 4.2.12, 5.3.1
Partial Occupancy or Use
9.6.6, **9.9**, 11.3.1.5
Patching, Cutting and
3.14, 6.2.5
Patents
3.17
Payment, Applications for
4.2.5, 7.3.9, 9.2.1, **9.3**, 9.4, 9.5, 9.6.3, 9.7.1, 9.8.5, 9.10.1, 14.2.3, 14.2.4, 14.4.3
Payment, Certificates for
4.2.5, 4.2.9, 9.3.3, **9.4**, 9.5, 9.6.1, 9.6.6, 9.7.1, 9.10.1, 9.10.3, 13.7, 14.1.1.3, 14.2.4
Payment, Failure of
9.5.1.3, **9.7**, 9.10.2, 13.6, 14.1.1.3, 14.2.1.2
Payment, Final
4.2.1, 4.2.9, 9.8.2, 9.10, 11.1.2, 11.1.3, 11.4.1, 11.4.5, 12.3.1, 13.7, 14.2.4, 14.4.3
Payment Bond, Performance Bond and
7.3.7.4, 9.6.7, 9.10.3, 11.4.9, **11.4**

Init.
/
AIA Document A201™ – 2007. Copyright © 1911, 1915, 1918, 1925, 1937, 1951, 1958, 1961, 1963, 1966, 1970, 1976, 1987, 1997 and 2007 by The American Institute of Architects. All rights reserved. WARNING: This AIA® Document is protected by U.S. Copyright Law and International Treaties. Unauthorized reproduction or distribution of this AIA® Document, or any portion of it, may result in severe civil and criminal penalties, and will be prosecuted to the maximum extent possible under the law. This document was produced by AIA software at 16:08:16 on 04/01/2013 under Order No.3625291867_1 which expires on 08/10/2013, and is not for resale.
User Notes:
(1162498114)

Payments, Progress
9.3, **9.6**, 9.8.5, 9.10.3, 13.6, 14.2.3, 15.1.3
PAYMENTS AND COMPLETION
9
Payments to Subcontractors
5.4.2, 9.5.1.3, 9.6.2, 9.6.3, 9.6.4, 9.6.7, 11.4.8, 14.2.1.2
PCB
10.3.1
Performance Bond and Payment Bond
7.3.7.4, 9.6.7, 9.10.3, 11.4.9, **11.4**
Permits, Fees, Notices and Compliance with Laws
2.2.2, **3.7**, 3.13, 7.3.7.4, 10.2.2
PERSONS AND PROPERTY, PROTECTION OF
10
Polychlorinated Biphenyl
10.3.1
Product Data, Definition of
3.12.2
Product Data and Samples, Shop Drawings
3.11, **3.12**, 4.2.7
Progress and Completion
4.2.2, **8.2**, 9.8, 9.9.1, 14.1.4, 15.1.3
Progress Payments
9.3, **9.6**, 9.8.5, 9.10.3, 13.6, 14.2.3, 15.1.3
Project, Definition of the
1.1.4
Project Representatives
4.2.10
Property Insurance
10.2.5, **11.3**
PROTECTION OF PERSONS AND PROPERTY
10
Regulations and Laws
1.5, 3.2.3, 3.6, 3.7, 3.12.10, 3.13, 4.1.1, 9.6.4, 9.9.1, 10.2.2, 11.1, 11.4, 13.1, 13.4, 13.5.1, 13.5.2, 13.6, 14, 15.2.8, 15.4
Rejection of Work
3.5.1, 4.2.6, 12.2.1
Releases and Waivers of Liens
9.10.2
Representations
3.2.1, 3.5.1, 3.12.6, 6.2.2, 8.2.1, 9.3.3, 9.4.2, 9.5.1, 9.8.2, 9.10.1
Representatives
2.1.1, 3.1.1, 3.9, 4.1.1, 4.2.1, 4.2.2, 4.2.10, 5.1.1, 5.1.2, 13.2.1
Responsibility for Those Performing the Work
3.3.2, 3.18, 4.2.3, 5.3.1, 6.1.3, 6.2, 6.3, 9.5.1, 10
Retainage
9.3.1, 9.6.2, 9.8.5, 9.9.1, 9.10.2, 9.10.3
Review of Contract Documents and Field Conditions by Contractor
3.2, 3.12.7, 6.1.3
Review of Contractor's Submittals by Owner and Architect
3.10.1, 3.10.2, 3.11, 3.12, 4.2, 5.2, 6.1.3, 9.2, 9.8.2
Review of Shop Drawings, Product Data and Samples by Contractor
3.12
Rights and Remedies
1.1.2, 2.3, 2.4, 3.5.1, 3.7.4, 3.15.2, 4.2.6, 4.5, 5.3, 5.4, 6.1, 6.3, 7.3.1, 8.3, 9.5.1, 9.7, 10.2.5, 10.3, 12.2.2, 12.2.4, **13.4**, 14, 15.4
Royalties, Patents and Copyrights
3.17
Rules and Notices for Arbitration
15.4.1
Safety of Persons and Property
10.2, 10.4
Safety Precautions and Programs
3.3.1, 4.2.2, 4.2.7, 5.3.1, **10.1**, 10.2, 10.4
Samples, Definition of
3.12.3
Samples, Shop Drawings, Product Data and
3.11, **3.12**, 4.2.7
Samples at the Site, Documents and
3.11
Schedule of Values
9.2, 9.3.1
Schedules, Construction
3.10, 3.12.1, 3.12.2, 6.1.3, 15.1.5.2
Separate Contracts and Contractors
1.1.4, 3.12.5, 3.14.2, 4.2.4, 4.2.7, 6, 8.3.1, 11.4.7, 12.1.2
Shop Drawings, Definition of
3.12.1
Shop Drawings, Product Data and Samples
3.11, **3.12**, 4.2.7
Site, Use of
3.13, 6.1.1, 6.2.1
Site Inspections
3.2.2, 3.3.3, 3.7.1, 3.7.4, 4.2, 9.4.2, 9.10.1, 13.5
Site Visits, Architect's
3.7.4, 4.2.2, 4.2.9, 9.4.2, 9.5.1, 9.9.2, 9.10.1, 13.5
Special Inspections and Testing
4.2.6, 12.2.1, 13.5
Specifications, Definition of the
1.1.6
Specifications, The
1.1.1, **1.1.6**, 1.2.2, 1.5, 3.11, 3.12.10, 3.17, 4.2.14
Statute of Limitations
13.7, 15.4.1.1
Stopping the Work
2.3, 9.7, 10.3, 14.1
Stored Materials
6.2.1, 9.3.2, 10.2.1.2, 10.2.4, 11.4.1.4
Subcontractor, Definition of
5.1.1
SUBCONTRACTORS
5
Subcontractors, Work by
1.2.2, 3.3.2, 3.12.1, 4.2.3, 5.2.3, 5.3, 5.4, 9.3.1.2, 9.6.7

AIA Document A201™ – 2007. Copyright © 1911, 1915, 1918, 1925, 1937, 1951, 1958, 1961, 1963, 1966, 1970, 1976, 1987, 1997 and 2007 by The American Institute of Architects. **All rights reserved. WARNING: This AIA® Document is protected by U.S. Copyright Law and International Treaties. Unauthorized reproduction or distribution of this AIA® Document, or any portion of it, may result in severe civil and criminal penalties, and will be prosecuted to the maximum extent possible under the law.** This document was produced by AIA software at 16:08:16 on 04/01/2013 under Order No.3625291867_1 which expires on 08/10/2013, and is not for resale.
User Notes:
(1162498114)

Subcontractual Relations
5.3, 5.4, 9.3.1.2, 9.6, 9.10, 10.2.1, 11.4.7, 11.4.8, 14.1, 14.2.1
Submittals
3.10, 3.11, 3.12, 4.2.7, 5.2.1, 5.2.3, 7.3.7, 9.2, 9.3, 9.8, 9.9.1, 9.10.2, 9.10.3, 11.1.3
Submittal Schedule
3.10.2, 3.12.5, 4.2.7
Subrogation, Waivers of
6.1.1, 11.4.5, **11.3.7**
Substantial Completion
4.2.9, 8.1.1, 8.1.3, 8.2.3, 9.4.2, **9.8**, 9.9.1, 9.10.3, 12.2, 13.7
Substantial Completion, Definition of
9.8.1
Substitution of Subcontractors
5.2.3, 5.2.4
Substitution of Architect
4.1.3
Substitutions of Materials
3.4.2, 3.5.1, 7.3.8
Sub-subcontractor, Definition of
5.1.2
Subsurface Conditions
3.7.4
Successors and Assigns
13.2
Superintendent
3.9, 10.2.6
Supervision and Construction Procedures
1.2.2, **3.3**, 3.4, 3.12.10, 4.2.2, 4.2.7, 6.1.3, 6.2.4, 7.1.3, 7.3.7, 8.2, 8.3.1, 9.4.2, 10, 12, 14, 15.1.3
Surety
5.4.1.2, 9.8.5, 9.10.2, 9.10.3, 14.2.2, 15.2.7
Surety, Consent of
9.10.2, 9.10.3
Surveys
2.2.3
Suspension by the Owner for Convenience
14.3
Suspension of the Work
5.4.2, 14.3
Suspension or Termination of the Contract
5.4.1.1, 11.4.9, 14
Taxes
3.6, 3.8.2.1, 7.3.7.4
Termination by the Contractor
14.1, 15.1.6
Termination by the Owner for Cause
5.4.1.1, **14.2**, 15.1.6
Termination by the Owner for Convenience
14.4
Termination of the Architect
4.1.3
Termination of the Contractor
14.2.2
TERMINATION OR SUSPENSION OF THE CONTRACT
14
Tests and Inspections
3.1.3, 3.3.3, 4.2.2, 4.2.6, 4.2.9, 9.4.2, 9.8.3, 9.9.2, 9.10.1, 10.3.2, 11.4.1.1, 12.2.1, **13.5**
TIME
8
Time, Delays and Extensions of
3.2.4, 3.7.4, 5.2.3, 7.2.1, 7.3.1, 7.4.1, **8.3**, 9.5.1, 9.7.1, 10.3.2, 10.4.1, 14.3.2, 15.1.5, 15.2.5
Time Limits
2.1.2, 2.2, 2.4, 3.2.2, 3.10, 3.11, 3.12.5, 3.15.1, 4.2, 4.4, 4.5, 5.2, 5.3, 5.4, 6.2.4, 7.3, 7.4, 8.2, 9.2, 9.3.1, 9.3.3, 9.4.1, 9.5, 9.6, 9.7, 9.8, 9.9, 9.10, 11.1.3, 11.4.1.5, 11.4.6, 11.4.10, 12.2, 13.5, 13.7, 14, 15.1.2, 15.4
Time Limits on Claims
3.7.4, 10.2.8, **13.7**, 15.1.2
Title to Work
9.3.2, 9.3.3
Transmission of Data in Digital Form
1.6
UNCOVERING AND CORRECTION OF WORK
12
Uncovering of Work
12.1
Unforeseen Conditions, Concealed or Unknown
3.7.4, 8.3.1, 10.3
Unit Prices
7.3.3.2, 7.3.4
Use of Documents
1.1.1, 1.5, 2.2.5, 3.12.6, 5.3
Use of Site
3.13, 6.1.1, 6.2.1
Values, Schedule of
9.2, 9.3.1
Waiver of Claims by the Architect
13.4.2
Waiver of Claims by the Contractor
9.10.5, 11.4.7, 13.4.2, 15.1.6
Waiver of Claims by the Owner
9.9.3, 9.10.3, 9.10.4, 11.4.3, 11.4.5, 11.4.7, 12.2.2.1, 13.4.2, 14.2.4, 15.1.6
Waiver of Consequential Damages
14.2.4, 15.1.6
Waiver of Liens
9.10.2, 9.10.4
Waivers of Subrogation
6.1.1, 11.4.5, **11.3.7**
Warranty
3.5, 4.2.9, 9.3.3, 9.8.4, 9.9.1, 9.10.4, 12.2.2, 13.7.1
Weather Delays
15.1.5.2
Work, Definition of
1.1.3

AIA Document A201™ – 2007. Copyright © 1911, 1915, 1918, 1925, 1937, 1951, 1958, 1961, 1963, 1966, 1970, 1976, 1987, 1997 and 2007 by The American Institute of Architects. All rights reserved. WARNING: This AIA® Document is protected by U.S. Copyright Law and International Treaties. Unauthorized reproduction or distribution of this AIA® Document, or any portion of it, may result in severe civil and criminal penalties, and will be prosecuted to the maximum extent possible under the law. This document was produced by AIA software at 16:08:16 on 04/01/2013 under Order No.3625291867_1 which expires on 08/10/2013, and is not for resale.
User Notes:
(1162498114)

Written Consent
1.5.2, 3.4.2, 3.7.4, 3.12.8, 3.14.2, 4.1.2, 9.3.2, 9.8.5, 9.9.1, 9.10.2, 9.10.3, 11.4.1, 13.2, 13.4.2, 15.4.4.2
Written Interpretations
4.2.11, 4.2.12

Written Notice
2.3, 2.4, 3.3.1, 3.9, 3.12.9, 3.12.10, 5.2.1, 8.2.2, 9.7, 9.10, 10.2.2, 10.3, 11.1.3, 11.4.6, 12.2.2, 12.2.4, **13.3**, 14, 15.4.1
Written Orders
1.1.1, 2.3, 3.9, 7, 8.2.2, 11.4.9, 12.1, 12.2, 13.5.2, 14.3.1, 15.1.2

Init.
/

AIA Document A201™ – 2007. Copyright © 1911, 1915, 1918, 1925, 1937, 1951, 1958, 1961, 1963, 1966, 1970, 1976, 1987, 1997 and 2007 by The American Institute of Architects. **All rights reserved. WARNING: This AIA® Document is protected by U.S. Copyright Law and International Treaties. Unauthorized reproduction or distribution of this AIA® Document, or any portion of it, may result in severe civil and criminal penalties, and will be prosecuted to the maximum extent possible under the law.** This document was produced by AIA software at 16:08:16 on 04/01/2013 under Order No.3625291867_1 which expires on 08/10/2013, and is not for resale.
User Notes: (1162498114)

ARTICLE 1 GENERAL PROVISIONS

§ 1.1 BASIC DEFINITIONS

§ 1.1.1 THE CONTRACT DOCUMENTS

The Contract Documents are enumerated in the Agreement between the Owner and Contractor (hereinafter the Agreement) and consist of the Agreement, Conditions of the Contract (General, Supplementary and other Conditions), Drawings, Specifications, Addenda issued prior to execution of the Contract, other documents listed in the Agreement and Modifications issued after execution of the Contract. A Modification is (1) a written amendment to the Contract signed by both parties, (2) a Change Order, (3) a Construction Change Directive or (4) a written order for a minor change in the Work issued by the Architect. Unless specifically enumerated in the Agreement, the Contract Documents do not include the advertisement or invitation to bid, Instructions to Bidders, sample forms, other information furnished by the Owner in anticipation of receiving bids or proposals, the Contractor's bid or proposal, or portions of Addenda relating to bidding requirements.

§ 1.1.2 THE CONTRACT

The Contract Documents form the Contract for Construction. The Contract represents the entire and integrated agreement between the parties hereto and supersedes prior negotiations, representations or agreements, either written or oral. The Contract may be amended or modified only by a Modification. The Contract Documents shall not be construed to create a contractual relationship of any kind (1) between the Contractor and the Architect or the Architect's consultants, (2) between the Owner and a Subcontractor or a Sub-subcontractor, (3) between the Owner and the Architect or the Architect's consultants or (4) between any persons or entities other than the Owner and the Contractor. The Architect shall, however, be entitled to performance and enforcement of obligations under the Contract intended to facilitate performance of the Architect's duties.

§ 1.1.3 THE WORK

The term "Work" means the construction and services required by the Contract Documents, whether completed or partially completed, and includes all other labor, materials, equipment and services provided or to be provided by the Contractor to fulfill the Contractor's obligations. The Work may constitute the whole or a part of the Project.

§ 1.1.4 THE PROJECT

The Project is the total construction of which the Work performed under the Contract Documents may be the whole or a part and which may include construction by the Owner and by separate contractors.

§ 1.1.5 THE DRAWINGS

The Drawings are the graphic and pictorial portions of the Contract Documents showing the design, location and dimensions of the Work, generally including plans, elevations, sections, details, schedules and diagrams.

§ 1.1.6 THE SPECIFICATIONS

The Specifications are that portion of the Contract Documents consisting of the written requirements for materials, equipment, systems, standards and workmanship for the Work, and performance of related services.

§ 1.1.7 INSTRUMENTS OF SERVICE

Instruments of Service are representations, in any medium of expression now known or later developed, of the tangible and intangible creative work performed by the Architect and the Architect's consultants under their respective professional services agreements. Instruments of Service may include, without limitation, studies, surveys, models, sketches, drawings, specifications, and other similar materials.

§ 1.1.8 INITIAL DECISION MAKER

The Initial Decision Maker is the person identified in the Agreement to render initial decisions on Claims in accordance with Section 15.2 and certify termination of the Agreement under Section 14.2.2.

§ 1.2 CORRELATION AND INTENT OF THE CONTRACT DOCUMENTS

§ 1.2.1 The intent of the Contract Documents is to include all items necessary for the proper execution and completion of the Work by the Contractor. The Contract Documents are complementary, and what is required by one shall be as binding as if required by all; performance by the Contractor shall be required only to the extent consistent with the Contract Documents and reasonably inferable from them as being necessary to produce the indicated results.

Init.
/

AIA Document A201™ – 2007. Copyright © 1911, 1915, 1918, 1925, 1937, 1951, 1958, 1961, 1963, 1966, 1970, 1976, 1987, 1997 and 2007 by The American Institute of Architects. All rights reserved. WARNING: This AIA® Document is protected by U.S. Copyright Law and International Treaties. Unauthorized reproduction or distribution of this AIA® Document, or any portion of it, may result in severe civil and criminal penalties, and will be prosecuted to the maximum extent possible under the law. This document was produced by AIA software at 16:08:16 on 04/01/2013 under Order No.3625291867_1 which expires on 08/10/2013, and is not for resale.
User Notes: (1162498114)

§ 1.2.2 Organization of the Specifications into divisions, sections and articles, and arrangement of Drawings shall not control the Contractor in dividing the Work among Subcontractors or in establishing the extent of Work to be performed by any trade.

§ 1.2.3 Unless otherwise stated in the Contract Documents, words that have well-known technical or construction industry meanings are used in the Contract Documents in accordance with such recognized meanings.

§ 1.3 CAPITALIZATION
Terms capitalized in these General Conditions include those that are (1) specifically defined, (2) the titles of numbered articles or (3) the titles of other documents published by the American Institute of Architects.

§ 1.4 INTERPRETATION
In the interest of brevity the Contract Documents frequently omit modifying words such as "all" and "any" and articles such as "the" and "an," but the fact that a modifier or an article is absent from one statement and appears in another is not intended to affect the interpretation of either statement.

§ 1.5 OWNERSHIP AND USE OF DRAWINGS, SPECIFICATIONS AND OTHER INSTRUMENTS OF SERVICE
§ 1.5.1 The Architect and the Architect's consultants shall be deemed the authors and owners of their respective Instruments of Service, including the Drawings and Specifications, and will retain all common law, statutory and other reserved rights, including copyrights. The Contractor, Subcontractors, Sub-subcontractors, and material or equipment suppliers shall not own or claim a copyright in the Instruments of Service. Submittal or distribution to meet official regulatory requirements or for other purposes in connection with this Project is not to be construed as publication in derogation of the Architect's or Architect's consultants' reserved rights.

§ 1.5.2 The Contractor, Subcontractors, Sub-subcontractors and material or equipment suppliers are authorized to use and reproduce the Instruments of Service provided to them solely and exclusively for execution of the Work. All copies made under this authorization shall bear the copyright notice, if any, shown on the Instruments of Service. The Contractor, Subcontractors, Sub-subcontractors, and material or equipment suppliers may not use the Instruments of Service on other projects or for additions to this Project outside the scope of the Work without the specific written consent of the Owner, Architect and the Architect's consultants.

§ 1.6 TRANSMISSION OF DATA IN DIGITAL FORM
If the parties intend to transmit Instruments of Service or any other information or documentation in digital form, they shall endeavor to establish necessary protocols governing such transmissions, unless otherwise already provided in the Agreement or the Contract Documents.

ARTICLE 2 OWNER
§ 2.1 GENERAL
§ 2.1.1 The Owner is the person or entity identified as such in the Agreement and is referred to throughout the Contract Documents as if singular in number. The Owner shall designate in writing a representative who shall have express authority to bind the Owner with respect to all matters requiring the Owner's approval or authorization. Except as otherwise provided in Section 4.2.1, the Architect does not have such authority. The term "Owner" means the Owner or the Owner's authorized representative.

§ 2.1.2 The Owner shall furnish to the Contractor within fifteen days after receipt of a written request, information necessary and relevant for the Contractor to evaluate, give notice of or enforce mechanic's lien rights. Such information shall include a correct statement of the record legal title to the property on which the Project is located, usually referred to as the site, and the Owner's interest therein.

§ 2.2 INFORMATION AND SERVICES REQUIRED OF THE OWNER
§ 2.2.1 Prior to commencement of the Work, the Contractor may request in writing that the Owner provide reasonable evidence that the Owner has made financial arrangements to fulfill the Owner's obligations under the Contract. Thereafter, the Contractor may only request such evidence if (1) the Owner fails to make payments to the Contractor as the Contract Documents require; (2) a change in the Work materially changes the Contract Sum; or (3) the Contractor identifies in writing a reasonable concern regarding the Owner's ability to make payment when due. The Owner shall furnish such evidence as a condition precedent to commencement or continuation of the Work or the

AIA Document A201™ – 2007. Copyright © 1911, 1915, 1918, 1925, 1937, 1951, 1958, 1961, 1963, 1966, 1970, 1976, 1987, 1997 and 2007 by The American Institute of Architects. All rights reserved. WARNING: This AIA® Document is protected by U.S. Copyright Law and International Treaties. Unauthorized reproduction or distribution of this AIA® Document, or any portion of it, may result in severe civil and criminal penalties, and will be prosecuted to the maximum extent possible under the law. This document was produced by AIA software at 16:08:16 on 04/01/2013 under Order No.3625291867_1 which expires on 08/10/2013, and is not for resale.
User Notes: (1162498114)

portion of the Work affected by a material change. After the Owner furnishes the evidence, the Owner shall not materially vary such financial arrangements without prior notice to the Contractor.

§ 2.2.2 Except for permits and fees that are the responsibility of the Contractor under the Contract Documents, including those required under Section 3.7.1, the Owner shall secure and pay for necessary approvals, easements, assessments and charges required for construction, use or occupancy of permanent structures or for permanent changes in existing facilities.

§ 2.2.3 The Owner shall furnish surveys describing physical characteristics, legal limitations and utility locations for the site of the Project, and a legal description of the site. The Contractor shall be entitled to rely on the accuracy of information furnished by the Owner but shall exercise proper precautions relating to the safe performance of the Work.

§ 2.2.4 The Owner shall furnish information or services required of the Owner by the Contract Documents with reasonable promptness. The Owner shall also furnish any other information or services under the Owner's control and relevant to the Contractor's performance of the Work with reasonable promptness after receiving the Contractor's written request for such information or services.

§ 2.2.5 Unless otherwise provided in the Contract Documents, the Owner shall furnish to the Contractor one copy of the Contract Documents for purposes of making reproductions pursuant to Section 1.5.2.

§ 2.3 OWNER'S RIGHT TO STOP THE WORK

If the Contractor fails to correct Work that is not in accordance with the requirements of the Contract Documents as required by Section 12.2 or repeatedly fails to carry out Work in accordance with the Contract Documents, the Owner may issue a written order to the Contractor to stop the Work, or any portion thereof, until the cause for such order has been eliminated; however, the right of the Owner to stop the Work shall not give rise to a duty on the part of the Owner to exercise this right for the benefit of the Contractor or any other person or entity, except to the extent required by Section 6.1.3.

§ 2.4 OWNER'S RIGHT TO CARRY OUT THE WORK

If the Contractor defaults or neglects to carry out the Work in accordance with the Contract Documents and fails within a ten-day period after receipt of written notice from the Owner to commence and continue correction of such default or neglect with diligence and promptness, the Owner may, without prejudice to other remedies the Owner may have, correct such deficiencies. In such case an appropriate Change Order shall be issued deducting from payments then or thereafter due the Contractor the reasonable cost of correcting such deficiencies, including Owner's expenses and compensation for the Architect's additional services made necessary by such default, neglect or failure. Such action by the Owner and amounts charged to the Contractor are both subject to prior approval of the Architect. If payments then or thereafter due the Contractor are not sufficient to cover such amounts, the Contractor shall pay the difference to the Owner.

ARTICLE 3 CONTRACTOR

§ 3.1 GENERAL

§ 3.1.1 The Contractor is the person or entity identified as such in the Agreement and is referred to throughout the Contract Documents as if singular in number. The Contractor shall be lawfully licensed, if required in the jurisdiction where the Project is located. The Contractor shall designate in writing a representative who shall have express authority to bind the Contractor with respect to all matters under this Contract. The term "Contractor" means the Contractor or the Contractor's authorized representative.

§ 3.1.2 The Contractor shall perform the Work in accordance with the Contract Documents.

§ 3.1.3 The Contractor shall not be relieved of obligations to perform the Work in accordance with the Contract Documents either by activities or duties of the Architect in the Architect's administration of the Contract, or by tests, inspections or approvals required or performed by persons or entities other than the Contractor.

Init.
/
AIA Document A201™ – 2007. Copyright © 1911, 1915, 1918, 1925, 1937, 1951, 1958, 1961, 1963, 1966, 1970, 1976, 1987, 1997 and 2007 by The American Institute of Architects. All rights reserved. WARNING: This AIA® Document is protected by U.S. Copyright Law and International Treaties. Unauthorized reproduction or distribution of this AIA® Document, or any portion of it, may result in severe civil and criminal penalties, and will be prosecuted to the maximum extent possible under the law. This document was produced by AIA software at 16:08:16 on 04/01/2013 under Order No.3625291867_1 which expires on 08/10/2013, and is not for resale.
User Notes:
(1162498114)

§ 3.2 REVIEW OF CONTRACT DOCUMENTS AND FIELD CONDITIONS BY CONTRACTOR

§ 3.2.1 Execution of the Contract by the Contractor is a representation that the Contractor has visited the site, become generally familiar with local conditions under which the Work is to be performed and correlated personal observations with requirements of the Contract Documents.

§ 3.2.2 Because the Contract Documents are complementary, the Contractor shall, before starting each portion of the Work, carefully study and compare the various Contract Documents relative to that portion of the Work, as well as the information furnished by the Owner pursuant to Section 2.2.3, shall take field measurements of any existing conditions related to that portion of the Work, and shall observe any conditions at the site affecting it. These obligations are for the purpose of facilitating coordination and construction by the Contractor and are not for the purpose of discovering errors, omissions, or inconsistencies in the Contract Documents; however, the Contractor shall promptly report to the Architect any errors, inconsistencies or omissions discovered by or made known to the Contractor as a request for information in such form as the Architect may require. It is recognized that the Contractor's review is made in the Contractor's capacity as a contractor and not as a licensed design professional, unless otherwise specifically provided in the Contract Documents.

§ 3.2.3 The Contractor is not required to ascertain that the Contract Documents are in accordance with applicable laws, statutes, ordinances, codes, rules and regulations, or lawful orders of public authorities, but the Contractor shall promptly report to the Architect any nonconformity discovered by or made known to the Contractor as a request for information in such form as the Architect may require.

§ 3.2.4 If the Contractor believes that additional cost or time is involved because of clarifications or instructions the Architect issues in response to the Contractor's notices or requests for information pursuant to Sections 3.2.2 or 3.2.3, the Contractor shall make Claims as provided in Article 15. If the Contractor fails to perform the obligations of Sections 3.2.2 or 3.2.3, the Contractor shall pay such costs and damages to the Owner as would have been avoided if the Contractor had performed such obligations. If the Contractor performs those obligations, the Contractor shall not be liable to the Owner or Architect for damages resulting from errors, inconsistencies or omissions in the Contract Documents, for differences between field measurements or conditions and the Contract Documents, or for nonconformities of the Contract Documents to applicable laws, statutes, ordinances, codes, rules and regulations, and lawful orders of public authorities.

§ 3.3 SUPERVISION AND CONSTRUCTION PROCEDURES

§ 3.3.1 The Contractor shall supervise and direct the Work, using the Contractor's best skill and attention. The Contractor shall be solely responsible for, and have control over, construction means, methods, techniques, sequences and procedures and for coordinating all portions of the Work under the Contract, unless the Contract Documents give other specific instructions concerning these matters. If the Contract Documents give specific instructions concerning construction means, methods, techniques, sequences or procedures, the Contractor shall evaluate the jobsite safety thereof and, except as stated below, shall be fully and solely responsible for the jobsite safety of such means, methods, techniques, sequences or procedures. If the Contractor determines that such means, methods, techniques, sequences or procedures may not be safe, the Contractor shall give timely written notice to the Owner and Architect and shall not proceed with that portion of the Work without further written instructions from the Architect. If the Contractor is then instructed to proceed with the required means, methods, techniques, sequences or procedures without acceptance of changes proposed by the Contractor, the Owner shall be solely responsible for any loss or damage arising solely from those Owner-required means, methods, techniques, sequences or procedures.

§ 3.3.2 The Contractor shall be responsible to the Owner for acts and omissions of the Contractor's employees, Subcontractors and their agents and employees, and other persons or entities performing portions of the Work for, or on behalf of, the Contractor or any of its Subcontractors.

§ 3.3.3 The Contractor shall be responsible for inspection of portions of Work already performed to determine that such portions are in proper condition to receive subsequent Work.

§ 3.4 LABOR AND MATERIALS

§ 3.4.1 Unless otherwise provided in the Contract Documents, the Contractor shall provide and pay for labor, materials, equipment, tools, construction equipment and machinery, water, heat, utilities, transportation, and other facilities and services necessary for proper execution and completion of the Work, whether temporary or permanent and whether or not incorporated or to be incorporated in the Work.

AIA Document A201™ – 2007. Copyright © 1911, 1915, 1918, 1925, 1937, 1951, 1958, 1961, 1963, 1966, 1970, 1976, 1987, 1997 and 2007 by The American Institute of Architects. **All rights reserved. WARNING: This AIA® Document is protected by U.S. Copyright Law and International Treaties. Unauthorized reproduction or distribution of this AIA® Document, or any portion of it, may result in severe civil and criminal penalties, and will be prosecuted to the maximum extent possible under the law.** This document was produced by AIA software at 16:08:16 on 04/01/2013 under Order No.3625291867_1 which expires on 08/10/2013, and is not for resale.
User Notes: (1162498114)

§ **3.4.2** Except in the case of minor changes in the Work authorized by the Architect in accordance with Sections 3.12.8 or 7.4, the Contractor may make substitutions only with the consent of the Owner, after evaluation by the Architect and in accordance with a Change Order or Construction Change Directive.

§ **3.4.3** The Contractor shall enforce strict discipline and good order among the Contractor's employees and other persons carrying out the Work. The Contractor shall not permit employment of unfit persons or persons not properly skilled in tasks assigned to them.

§ 3.5 WARRANTY

The Contractor warrants to the Owner and Architect that materials and equipment furnished under the Contract will be of good quality and new unless the Contract Documents require or permit otherwise. The Contractor further warrants that the Work will conform to the requirements of the Contract Documents and will be free from defects, except for those inherent in the quality of the Work the Contract Documents require or permit. Work, materials, or equipment not conforming to these requirements may be considered defective. The Contractor's warranty excludes remedy for damage or defect caused by abuse, alterations to the Work not executed by the Contractor, improper or insufficient maintenance, improper operation, or normal wear and tear and normal usage. If required by the Architect, the Contractor shall furnish satisfactory evidence as to the kind and quality of materials and equipment.

§ 3.6 TAXES

The Contractor shall pay sales, consumer, use and similar taxes for the Work provided by the Contractor that are legally enacted when bids are received or negotiations concluded, whether or not yet effective or merely scheduled to go into effect.

§ 3.7 PERMITS, FEES, NOTICES, AND COMPLIANCE WITH LAWS

§ **3.7.1** Unless otherwise provided in the Contract Documents, the Contractor shall secure and pay for the building permit as well as for other permits, fees, licenses, and inspections by government agencies necessary for proper execution and completion of the Work that are customarily secured after execution of the Contract and legally required at the time bids are received or negotiations concluded.

§ **3.7.2** The Contractor shall comply with and give notices required by applicable laws, statutes, ordinances, codes, rules and regulations, and lawful orders of public authorities applicable to performance of the Work.

§ **3.7.3** If the Contractor performs Work knowing it to be contrary to applicable laws, statutes, ordinances, codes, rules and regulations, or lawful orders of public authorities, the Contractor shall assume appropriate responsibility for such Work and shall bear the costs attributable to correction.

§ **3.7.4 Concealed or Unknown Conditions.** If the Contractor encounters conditions at the site that are (1) subsurface or otherwise concealed physical conditions that differ materially from those indicated in the Contract Documents or (2) unknown physical conditions of an unusual nature, that differ materially from those ordinarily found to exist and generally recognized as inherent in construction activities of the character provided for in the Contract Documents, the Contractor shall promptly provide notice to the Owner and the Architect before conditions are disturbed and in no event later than 21 days after first observance of the conditions. The Architect will promptly investigate such conditions and, if the Architect determines that they differ materially and cause an increase or decrease in the Contractor's cost of, or time required for, performance of any part of the Work, will recommend an equitable adjustment in the Contract Sum or Contract Time, or both. If the Architect determines that the conditions at the site are not materially different from those indicated in the Contract Documents and that no change in the terms of the Contract is justified, the Architect shall promptly notify the Owner and Contractor in writing, stating the reasons. If either party disputes the Architect's determination or recommendation, that party may proceed as provided in Article 15.

§ **3.7.5** If, in the course of the Work, the Contractor encounters human remains or recognizes the existence of burial markers, archaeological sites or wetlands not indicated in the Contract Documents, the Contractor shall immediately suspend any operations that would affect them and shall notify the Owner and Architect. Upon receipt of such notice, the Owner shall promptly take any action necessary to obtain governmental authorization required to resume the operations. The Contractor shall continue to suspend such operations until otherwise instructed by the Owner but shall continue with all other operations that do not affect those remains or features. Requests for adjustments in the Contract Sum and Contract Time arising from the existence of such remains or features may be made as provided in Article 15.

Init.
/
AIA Document A201™ – 2007. Copyright © 1911, 1915, 1918, 1925, 1937, 1951, 1958, 1961, 1963, 1966, 1970, 1976, 1987, 1997 and 2007 by The American Institute of Architects. All rights reserved. WARNING: This AIA® Document is protected by U.S. Copyright Law and International Treaties. Unauthorized reproduction or distribution of this AIA® Document, or any portion of it, may result in severe civil and criminal penalties, and will be prosecuted to the maximum extent possible under the law. This document was produced by AIA software at 16:08:16 on 04/01/2013 under Order No.3625291867_1 which expires on 08/10/2013, and is not for resale.
User Notes: (1162498114)

§ 3.8 ALLOWANCES

§ 3.8.1 The Contractor shall include in the Contract Sum all allowances stated in the Contract Documents. Items covered by allowances shall be supplied for such amounts and by such persons or entities as the Owner may direct, but the Contractor shall not be required to employ persons or entities to whom the Contractor has reasonable objection.

§ 3.8.2 Unless otherwise provided in the Contract Documents,

.1 allowances shall cover the cost to the Contractor of materials and equipment delivered at the site and all required taxes, less applicable trade discounts;

.2 Contractor's costs for unloading and handling at the site, labor, installation costs, overhead, profit and other expenses contemplated for stated allowance amounts shall be included in the Contract Sum but not in the allowances; and

.3 whenever costs are more than or less than allowances, the Contract Sum shall be adjusted accordingly by Change Order. The amount of the Change Order shall reflect (1) the difference between actual costs and the allowances under Section 3.8.2.1 and (2) changes in Contractor's costs under Section 3.8.2.2.

§ 3.8.3 Materials and equipment under an allowance shall be selected by the Owner with reasonable promptness.

§ 3.9 SUPERINTENDENT

§ 3.9.1 The Contractor shall employ a competent superintendent and necessary assistants who shall be in attendance at the Project site during performance of the Work. The superintendent shall represent the Contractor, and communications given to the superintendent shall be as binding as if given to the Contractor.

§ 3.9.2 The Contractor, as soon as practicable after award of the Contract, shall furnish in writing to the Owner through the Architect the name and qualifications of a proposed superintendent. The Architect may reply within 14 days to the Contractor in writing stating (1) whether the Owner or the Architect has reasonable objection to the proposed superintendent or (2) that the Architect requires additional time to review. Failure of the Architect to reply within the 14 day period shall constitute notice of no reasonable objection.

§ 3.9.3 The Contractor shall not employ a proposed superintendent to whom the Owner or Architect has made reasonable and timely objection. The Contractor shall not change the superintendent without the Owner's consent, which shall not unreasonably be withheld or delayed.

§ 3.10 CONTRACTOR'S CONSTRUCTION SCHEDULES

§ 3.10.1 The Contractor, promptly after being awarded the Contract, shall prepare and submit for the Owner's and Architect's information a Contractor's construction schedule for the Work. The schedule shall not exceed time limits current under the Contract Documents, shall be revised at appropriate intervals as required by the conditions of the Work and Project, shall be related to the entire Project to the extent required by the Contract Documents, and shall provide for expeditious and practicable execution of the Work.

§ 3.10.2 The Contractor shall prepare a submittal schedule, promptly after being awarded the Contract and thereafter as necessary to maintain a current submittal schedule, and shall submit the schedule(s) for the Architect's approval. The Architect's approval shall not unreasonably be delayed or withheld. The submittal schedule shall (1) be coordinated with the Contractor's construction schedule, and (2) allow the Architect reasonable time to review submittals. If the Contractor fails to submit a submittal schedule, the Contractor shall not be entitled to any increase in Contract Sum or extension of Contract Time based on the time required for review of submittals.

§ 3.10.3 The Contractor shall perform the Work in general accordance with the most recent schedules submitted to the Owner and Architect.

§ 3.11 DOCUMENTS AND SAMPLES AT THE SITE

The Contractor shall maintain at the site for the Owner one copy of the Drawings, Specifications, Addenda, Change Orders and other Modifications, in good order and marked currently to indicate field changes and selections made during construction, and one copy of approved Shop Drawings, Product Data, Samples and similar required submittals. These shall be available to the Architect and shall be delivered to the Architect for submittal to the Owner upon completion of the Work as a record of the Work as constructed.

Init.
/
AIA Document A201™ – 2007. Copyright © 1911, 1915, 1918, 1925, 1937, 1951, 1958, 1961, 1963, 1966, 1970, 1976, 1987, 1997 and 2007 by The American Institute of Architects. **All rights reserved. WARNING: This AIA® Document is protected by U.S. Copyright Law and International Treaties. Unauthorized reproduction or distribution of this AIA® Document, or any portion of it, may result in severe civil and criminal penalties, and will be prosecuted to the maximum extent possible under the law.** This document was produced by AIA software at 16:08:16 on 04/01/2013 under Order No.3625291867_1 which expires on 08/10/2013, and is not for resale.
User Notes: (1162498114)

§ 3.12 SHOP DRAWINGS, PRODUCT DATA AND SAMPLES

§ 3.12.1 Shop Drawings are drawings, diagrams, schedules and other data specially prepared for the Work by the Contractor or a Subcontractor, Sub-subcontractor, manufacturer, supplier or distributor to illustrate some portion of the Work.

§ 3.12.2 Product Data are illustrations, standard schedules, performance charts, instructions, brochures, diagrams and other information furnished by the Contractor to illustrate materials or equipment for some portion of the Work.

§ 3.12.3 Samples are physical examples that illustrate materials, equipment or workmanship and establish standards by which the Work will be judged.

§ 3.12.4 Shop Drawings, Product Data, Samples and similar submittals are not Contract Documents. Their purpose is to demonstrate the way by which the Contractor proposes to conform to the information given and the design concept expressed in the Contract Documents for those portions of the Work for which the Contract Documents require submittals. Review by the Architect is subject to the limitations of Section 4.2.7. Informational submittals upon which the Architect is not expected to take responsive action may be so identified in the Contract Documents. Submittals that are not required by the Contract Documents may be returned by the Architect without action.

§ 3.12.5 The Contractor shall review for compliance with the Contract Documents, approve and submit to the Architect Shop Drawings, Product Data, Samples and similar submittals required by the Contract Documents in accordance with the submittal schedule approved by the Architect or, in the absence of an approved submittal schedule, with reasonable promptness and in such sequence as to cause no delay in the Work or in the activities of the Owner or of separate contractors.

§ 3.12.6 By submitting Shop Drawings, Product Data, Samples and similar submittals, the Contractor represents to the Owner and Architect that the Contractor has (1) reviewed and approved them, (2) determined and verified materials, field measurements and field construction criteria related thereto, or will do so and (3) checked and coordinated the information contained within such submittals with the requirements of the Work and of the Contract Documents.

§ 3.12.7 The Contractor shall perform no portion of the Work for which the Contract Documents require submittal and review of Shop Drawings, Product Data, Samples or similar submittals until the respective submittal has been approved by the Architect.

§ 3.12.8 The Work shall be in accordance with approved submittals except that the Contractor shall not be relieved of responsibility for deviations from requirements of the Contract Documents by the Architect's approval of Shop Drawings, Product Data, Samples or similar submittals unless the Contractor has specifically informed the Architect in writing of such deviation at the time of submittal and (1) the Architect has given written approval to the specific deviation as a minor change in the Work, or (2) a Change Order or Construction Change Directive has been issued authorizing the deviation. The Contractor shall not be relieved of responsibility for errors or omissions in Shop Drawings, Product Data, Samples or similar submittals by the Architect's approval thereof.

§ 3.12.9 The Contractor shall direct specific attention, in writing or on resubmitted Shop Drawings, Product Data, Samples or similar submittals, to revisions other than those requested by the Architect on previous submittals. In the absence of such written notice, the Architect's approval of a resubmission shall not apply to such revisions.

§ 3.12.10 The Contractor shall not be required to provide professional services that constitute the practice of architecture or engineering unless such services are specifically required by the Contract Documents for a portion of the Work or unless the Contractor needs to provide such services in order to carry out the Contractor's responsibilities for construction means, methods, techniques, sequences and procedures. The Contractor shall not be required to provide professional services in violation of applicable law. If professional design services or certifications by a design professional related to systems, materials or equipment are specifically required of the Contractor by the Contract Documents, the Owner and the Architect will specify all performance and design criteria that such services must satisfy. The Contractor shall cause such services or certifications to be provided by a properly licensed design professional, whose signature and seal shall appear on all drawings, calculations, specifications, certifications, Shop Drawings and other submittals prepared by such professional. Shop Drawings and other submittals related to the Work designed or certified by such professional, if prepared by others, shall bear such professional's written approval when submitted to the Architect. The Owner and the Architect shall be entitled to rely upon the adequacy, accuracy and

AIA Document A201™ – 2007. Copyright © 1911, 1915, 1918, 1925, 1937, 1951, 1958, 1961, 1963, 1966, 1970, 1976, 1987, 1997 and 2007 by The American Institute of Architects. All rights reserved. WARNING: This AIA® Document is protected by U.S. Copyright Law and International Treaties. Unauthorized reproduction or distribution of this AIA® Document, or any portion of it, may result in severe civil and criminal penalties, and will be prosecuted to the maximum extent possible under the law. This document was produced by AIA software at 16:08:16 on 04/01/2013 under Order No.3625291867_1 which expires on 08/10/2013, and is not for resale.
User Notes:

completeness of the services, certifications and approvals performed or provided by such design professionals, provided the Owner and Architect have specified to the Contractor all performance and design criteria that such services must satisfy. Pursuant to this Section 3.12.10, the Architect will review, approve or take other appropriate action on submittals only for the limited purpose of checking for conformance with information given and the design concept expressed in the Contract Documents. The Contractor shall not be responsible for the adequacy of the performance and design criteria specified in the Contract Documents.

§ 3.13 USE OF SITE
The Contractor shall confine operations at the site to areas permitted by applicable laws, statutes, ordinances, codes, rules and regulations, and lawful orders of public authorities and the Contract Documents and shall not unreasonably encumber the site with materials or equipment.

§ 3.14 CUTTING AND PATCHING
§ 3.14.1 The Contractor shall be responsible for cutting, fitting or patching required to complete the Work or to make its parts fit together properly. All areas requiring cutting, fitting and patching shall be restored to the condition existing prior to the cutting, fitting and patching, unless otherwise required by the Contract Documents.

§ 3.14.2 The Contractor shall not damage or endanger a portion of the Work or fully or partially completed construction of the Owner or separate contractors by cutting, patching or otherwise altering such construction, or by excavation. The Contractor shall not cut or otherwise alter such construction by the Owner or a separate contractor except with written consent of the Owner and of such separate contractor; such consent shall not be unreasonably withheld. The Contractor shall not unreasonably withhold from the Owner or a separate contractor the Contractor's consent to cutting or otherwise altering the Work.

§ 3.15 CLEANING UP
§ 3.15.1 The Contractor shall keep the premises and surrounding area free from accumulation of waste materials or rubbish caused by operations under the Contract. At completion of the Work, the Contractor shall remove waste materials, rubbish, the Contractor's tools, construction equipment, machinery and surplus materials from and about the Project.

§ 3.15.2 If the Contractor fails to clean up as provided in the Contract Documents, the Owner may do so and Owner shall be entitled to reimbursement from the Contractor.

§ 3.16 ACCESS TO WORK
The Contractor shall provide the Owner and Architect access to the Work in preparation and progress wherever located.

§ 3.17 ROYALTIES, PATENTS AND COPYRIGHTS
The Contractor shall pay all royalties and license fees. The Contractor shall defend suits or claims for infringement of copyrights and patent rights and shall hold the Owner and Architect harmless from loss on account thereof, but shall not be responsible for such defense or loss when a particular design, process or product of a particular manufacturer or manufacturers is required by the Contract Documents, or where the copyright violations are contained in Drawings, Specifications or other documents prepared by the Owner or Architect. However, if the Contractor has reason to believe that the required design, process or product is an infringement of a copyright or a patent, the Contractor shall be responsible for such loss unless such information is promptly furnished to the Architect.

§ 3.18 INDEMNIFICATION
§ 3.18.1 To the fullest extent permitted by law the Contractor shall indemnify and hold harmless the Owner, Architect, Architect's consultants, and agents and employees of any of them from and against claims, damages, losses and expenses, including but not limited to attorneys' fees, arising out of or resulting from performance of the Work, provided that such claim, damage, loss or expense is attributable to bodily injury, sickness, disease or death, or to injury to or destruction of tangible property (other than the Work itself), but only to the extent caused by the negligent acts or omissions of the Contractor, a Subcontractor, anyone directly or indirectly employed by them or anyone for whose acts they may be liable, regardless of whether or not such claim, damage, loss or expense is caused in part by a party indemnified hereunder. Such obligation shall not be construed to negate, abridge, or reduce other rights or obligations of indemnity which would otherwise exist as to a party or person described in this Section 3.18.

AIA Document A201™ – 2007. Copyright © 1911, 1915, 1918, 1925, 1937, 1951, 1958, 1961, 1963, 1966, 1970, 1976, 1987, 1997 and 2007 by The American Institute of Architects. All rights reserved. WARNING: This AIA® Document is protected by U.S. Copyright Law and International Treaties. Unauthorized reproduction or distribution of this AIA® Document, or any portion of it, may result in severe civil and criminal penalties, and will be prosecuted to the maximum extent possible under the law. This document was produced by AIA software at 16:08:16 on 04/01/2013 under Order No.3625291867_1 which expires on 08/10/2013, and is not for resale.
User Notes:

§ **3.18.2** In claims against any person or entity indemnified under this Section 3.18 by an employee of the Contractor, a Subcontractor, anyone directly or indirectly employed by them or anyone for whose acts they may be liable, the indemnification obligation under Section 3.18.1 shall not be limited by a limitation on amount or type of damages, compensation or benefits payable by or for the Contractor or a Subcontractor under workers' compensation acts, disability benefit acts or other employee benefit acts.

ARTICLE 4 ARCHITECT

§ 4.1 GENERAL

§ **4.1.1** The Owner shall retain an architect lawfully licensed to practice architecture or an entity lawfully practicing architecture in the jurisdiction where the Project is located. That person or entity is identified as the Architect in the Agreement and is referred to throughout the Contract Documents as if singular in number.

§ **4.1.2** Duties, responsibilities and limitations of authority of the Architect as set forth in the Contract Documents shall not be restricted, modified or extended without written consent of the Owner, Contractor and Architect. Consent shall not be unreasonably withheld.

§ **4.1.3** If the employment of the Architect is terminated, the Owner shall employ a successor architect as to whom the Contractor has no reasonable objection and whose status under the Contract Documents shall be that of the Architect.

§ 4.2 ADMINISTRATION OF THE CONTRACT

§ **4.2.1** The Architect will provide administration of the Contract as described in the Contract Documents and will be an Owner's representative during construction until the date the Architect issues the final Certificate For Payment. The Architect will have authority to act on behalf of the Owner only to the extent provided in the Contract Documents.

§ **4.2.2** The Architect will visit the site at intervals appropriate to the stage of construction, or as otherwise agreed with the Owner, to become generally familiar with the progress and quality of the portion of the Work completed, and to determine in general if the Work observed is being performed in a manner indicating that the Work, when fully completed, will be in accordance with the Contract Documents. However, the Architect will not be required to make exhaustive or continuous on-site inspections to check the quality or quantity of the Work. The Architect will not have control over, charge of, or responsibility for, the construction means, methods, techniques, sequences or procedures, or for the safety precautions and programs in connection with the Work, since these are solely the Contractor's rights and responsibilities under the Contract Documents, except as provided in Section 3.3.1.

§ **4.2.3** On the basis of the site visits, the Architect will keep the Owner reasonably informed about the progress and quality of the portion of the Work completed, and report to the Owner (1) known deviations from the Contract Documents and from the most recent construction schedule submitted by the Contractor, and (2) defects and deficiencies observed in the Work. The Architect will not be responsible for the Contractor's failure to perform the Work in accordance with the requirements of the Contract Documents. The Architect will not have control over or charge of and will not be responsible for acts or omissions of the Contractor, Subcontractors, or their agents or employees, or any other persons or entities performing portions of the Work.

§ 4.2.4 COMMUNICATIONS FACILITATING CONTRACT ADMINISTRATION

Except as otherwise provided in the Contract Documents or when direct communications have been specially authorized, the Owner and Contractor shall endeavor to communicate with each other through the Architect about matters arising out of or relating to the Contract. Communications by and with the Architect's consultants shall be through the Architect. Communications by and with Subcontractors and material suppliers shall be through the Contractor. Communications by and with separate contractors shall be through the Owner.

§ **4.2.5** Based on the Architect's evaluations of the Contractor's Applications for Payment, the Architect will review and certify the amounts due the Contractor and will issue Certificates for Payment in such amounts.

§ **4.2.6** The Architect has authority to reject Work that does not conform to the Contract Documents. Whenever the Architect considers it necessary or advisable, the Architect will have authority to require inspection or testing of the Work in accordance with Sections 13.5.2 and 13.5.3, whether or not such Work is fabricated, installed or completed. However, neither this authority of the Architect nor a decision made in good faith either to exercise or not to exercise such authority shall give rise to a duty or responsibility of the Architect to the Contractor, Subcontractors, material and equipment suppliers, their agents or employees, or other persons or entities performing portions of the Work.

AIA Document A201™ – 2007. Copyright © 1911, 1915, 1918, 1925, 1937, 1951, 1958, 1961, 1963, 1966, 1970, 1976, 1987, 1997 and 2007 by The American Institute of Architects. **All rights reserved. WARNING: This AIA® Document is protected by U.S. Copyright Law and International Treaties. Unauthorized reproduction or distribution of this AIA® Document, or any portion of it, may result in severe civil and criminal penalties, and will be prosecuted to the maximum extent possible under the law.** This document was produced by AIA software at 16:08:16 on 04/01/2013 under Order No.3625291867_1 which expires on 08/10/2013, and is not for resale.
User Notes:

§ 4.2.7 The Architect will review and approve, or take other appropriate action upon, the Contractor's submittals such as Shop Drawings, Product Data and Samples, but only for the limited purpose of checking for conformance with information given and the design concept expressed in the Contract Documents. The Architect's action will be taken in accordance with the submittal schedule approved by the Architect or, in the absence of an approved submittal schedule, with reasonable promptness while allowing sufficient time in the Architect's professional judgment to permit adequate review. Review of such submittals is not conducted for the purpose of determining the accuracy and completeness of other details such as dimensions and quantities, or for substantiating instructions for installation or performance of equipment or systems, all of which remain the responsibility of the Contractor as required by the Contract Documents. The Architect's review of the Contractor's submittals shall not relieve the Contractor of the obligations under Sections 3.3, 3.5 and 3.12. The Architect's review shall not constitute approval of safety precautions or, unless otherwise specifically stated by the Architect, of any construction means, methods, techniques, sequences or procedures. The Architect's approval of a specific item shall not indicate approval of an assembly of which the item is a component.

§ 4.2.8 The Architect will prepare Change Orders and Construction Change Directives, and may authorize minor changes in the Work as provided in Section 7.4. The Architect will investigate and make determinations and recommendations regarding concealed and unknown conditions as provided in Section 3.7.4.

§ 4.2.9 The Architect will conduct inspections to determine the date or dates of Substantial Completion and the date of final completion; issue Certificates of Substantial Completion pursuant to Section 9.8; receive and forward to the Owner, for the Owner's review and records, written warranties and related documents required by the Contract and assembled by the Contractor pursuant to Section 9.10; and issue a final Certificate for Payment pursuant to Section 9.10.

§ 4.2.10 If the Owner and Architect agree, the Architect will provide one or more project representatives to assist in carrying out the Architect's responsibilities at the site. The duties, responsibilities and limitations of authority of such project representatives shall be as set forth in an exhibit to be incorporated in the Contract Documents.

§ 4.2.11 The Architect will interpret and decide matters concerning performance under, and requirements of, the Contract Documents on written request of either the Owner or Contractor. The Architect's response to such requests will be made in writing within any time limits agreed upon or otherwise with reasonable promptness.

§ 4.2.12 Interpretations and decisions of the Architect will be consistent with the intent of, and reasonably inferable from, the Contract Documents and will be in writing or in the form of drawings. When making such interpretations and decisions, the Architect will endeavor to secure faithful performance by both Owner and Contractor, will not show partiality to either and will not be liable for results of interpretations or decisions rendered in good faith.

§ 4.2.13 The Architect's decisions on matters relating to aesthetic effect will be final if consistent with the intent expressed in the Contract Documents.

§ 4.2.14 The Architect will review and respond to requests for information about the Contract Documents. The Architect's response to such requests will be made in writing within any time limits agreed upon or otherwise with reasonable promptness. If appropriate, the Architect will prepare and issue supplemental Drawings and Specifications in response to the requests for information.

ARTICLE 5 SUBCONTRACTORS

§ 5.1 DEFINITIONS

§ 5.1.1 A Subcontractor is a person or entity who has a direct contract with the Contractor to perform a portion of the Work at the site. The term "Subcontractor" is referred to throughout the Contract Documents as if singular in number and means a Subcontractor or an authorized representative of the Subcontractor. The term "Subcontractor" does not include a separate contractor or subcontractors of a separate contractor.

§ 5.1.2 A Sub-subcontractor is a person or entity who has a direct or indirect contract with a Subcontractor to perform a portion of the Work at the site. The term "Sub-subcontractor" is referred to throughout the Contract Documents as if singular in number and means a Sub-subcontractor or an authorized representative of the Sub-subcontractor.

AIA Document A201™ – 2007. Copyright © 1911, 1915, 1918, 1925, 1937, 1951, 1958, 1961, 1963, 1966, 1970, 1976, 1987, 1997 and 2007 by The American Institute of Architects. All rights reserved. WARNING: This AIA® Document is protected by U.S. Copyright Law and International Treaties. Unauthorized reproduction or distribution of this AIA® Document, or any portion of it, may result in severe civil and criminal penalties, and will be prosecuted to the maximum extent possible under the law. This document was produced by AIA software at 16:08:16 on 04/01/2013 under Order No.3625291867_1 which expires on 08/10/2013, and is not for resale.
User Notes:

§ 5.2 AWARD OF SUBCONTRACTS AND OTHER CONTRACTS FOR PORTIONS OF THE WORK

§ 5.2.1 Unless otherwise stated in the Contract Documents or the bidding requirements, the Contractor, as soon as practicable after award of the Contract, shall furnish in writing to the Owner through the Architect the names of persons or entities (including those who are to furnish materials or equipment fabricated to a special design) proposed for each principal portion of the Work. The Architect may reply within 14 days to the Contractor in writing stating (1) whether the Owner or the Architect has reasonable objection to any such proposed person or entity or (2) that the Architect requires additional time for review. Failure of the Owner or Architect to reply within the 14 day period shall constitute notice of no reasonable objection.

§ 5.2.2 The Contractor shall not contract with a proposed person or entity to whom the Owner or Architect has made reasonable and timely objection. The Contractor shall not be required to contract with anyone to whom the Contractor has made reasonable objection.

§ 5.2.3 If the Owner or Architect has reasonable objection to a person or entity proposed by the Contractor, the Contractor shall propose another to whom the Owner or Architect has no reasonable objection. If the proposed but rejected Subcontractor was reasonably capable of performing the Work, the Contract Sum and Contract Time shall be increased or decreased by the difference, if any, occasioned by such change, and an appropriate Change Order shall be issued before commencement of the substitute Subcontractor's Work. However, no increase in the Contract Sum or Contract Time shall be allowed for such change unless the Contractor has acted promptly and responsively in submitting names as required.

§ 5.2.4 The Contractor shall not substitute a Subcontractor, person or entity previously selected if the Owner or Architect makes reasonable objection to such substitution.

§ 5.3 SUBCONTRACTUAL RELATIONS

By appropriate agreement, written where legally required for validity, the Contractor shall require each Subcontractor, to the extent of the Work to be performed by the Subcontractor, to be bound to the Contractor by terms of the Contract Documents, and to assume toward the Contractor all the obligations and responsibilities, including the responsibility for safety of the Subcontractor's Work, which the Contractor, by these Documents, assumes toward the Owner and Architect. Each subcontract agreement shall preserve and protect the rights of the Owner and Architect under the Contract Documents with respect to the Work to be performed by the Subcontractor so that subcontracting thereof will not prejudice such rights, and shall allow to the Subcontractor, unless specifically provided otherwise in the subcontract agreement, the benefit of all rights, remedies and redress against the Contractor that the Contractor, by the Contract Documents, has against the Owner. Where appropriate, the Contractor shall require each Subcontractor to enter into similar agreements with Sub-subcontractors. The Contractor shall make available to each proposed Subcontractor, prior to the execution of the subcontract agreement, copies of the Contract Documents to which the Subcontractor will be bound, and, upon written request of the Subcontractor, identify to the Subcontractor terms and conditions of the proposed subcontract agreement that may be at variance with the Contract Documents. Subcontractors will similarly make copies of applicable portions of such documents available to their respective proposed Sub-subcontractors.

§ 5.4 CONTINGENT ASSIGNMENT OF SUBCONTRACTS

§ 5.4.1 Each subcontract agreement for a portion of the Work is assigned by the Contractor to the Owner, provided that

- **.1** assignment is effective only after termination of the Contract by the Owner for cause pursuant to Section 14.2 and only for those subcontract agreements that the Owner accepts by notifying the Subcontractor and Contractor in writing; and
- **.2** assignment is subject to the prior rights of the surety, if any, obligated under bond relating to the Contract.

When the Owner accepts the assignment of a subcontract agreement, the Owner assumes the Contractor's rights and obligations under the subcontract.

§ 5.4.2 Upon such assignment, if the Work has been suspended for more than 30 days, the Subcontractor's compensation shall be equitably adjusted for increases in cost resulting from the suspension.

§ 5.4.3 Upon such assignment to the Owner under this Section 5.4, the Owner may further assign the subcontract to a successor contractor or other entity. If the Owner assigns the subcontract to a successor contractor or other entity, the

AIA Document A201™ – 2007. Copyright © 1911, 1915, 1918, 1925, 1937, 1951, 1958, 1961, 1963, 1966, 1970, 1976, 1987, 1997 and 2007 by The American Institute of Architects. All rights reserved. WARNING: This AIA® Document is protected by U.S. Copyright Law and International Treaties. Unauthorized reproduction or distribution of this AIA® Document, or any portion of it, may result in severe civil and criminal penalties, and will be prosecuted to the maximum extent possible under the law. This document was produced by AIA software at 16:08:16 on 04/01/2013 under Order No.3625291867_1 which expires on 08/10/2013, and is not for resale.
User Notes:

Owner shall nevertheless remain legally responsible for all of the successor contractor's obligations under the subcontract.

ARTICLE 6 CONSTRUCTION BY OWNER OR BY SEPARATE CONTRACTORS

§ 6.1 OWNER'S RIGHT TO PERFORM CONSTRUCTION AND TO AWARD SEPARATE CONTRACTS

§ 6.1.1 The Owner reserves the right to perform construction or operations related to the Project with the Owner's own forces, and to award separate contracts in connection with other portions of the Project or other construction or operations on the site under Conditions of the Contract identical or substantially similar to these including those portions related to insurance and waiver of subrogation. If the Contractor claims that delay or additional cost is involved because of such action by the Owner, the Contractor shall make such Claim as provided in Article 15.

§ 6.1.2 When separate contracts are awarded for different portions of the Project or other construction or operations on the site, the term "Contractor" in the Contract Documents in each case shall mean the Contractor who executes each separate Owner-Contractor Agreement.

§ 6.1.3 The Owner shall provide for coordination of the activities of the Owner's own forces and of each separate contractor with the Work of the Contractor, who shall cooperate with them. The Contractor shall participate with other separate contractors and the Owner in reviewing their construction schedules. The Contractor shall make any revisions to the construction schedule deemed necessary after a joint review and mutual agreement. The construction schedules shall then constitute the schedules to be used by the Contractor, separate contractors and the Owner until subsequently revised.

§ 6.1.4 Unless otherwise provided in the Contract Documents, when the Owner performs construction or operations related to the Project with the Owner's own forces, the Owner shall be deemed to be subject to the same obligations and to have the same rights that apply to the Contractor under the Conditions of the Contract, including, without excluding others, those stated in Article 3, this Article 6 and Articles 10, 11 and 12.

§ 6.2 MUTUAL RESPONSIBILITY

§ 6.2.1 The Contractor shall afford the Owner and separate contractors reasonable opportunity for introduction and storage of their materials and equipment and performance of their activities, and shall connect and coordinate the Contractor's construction and operations with theirs as required by the Contract Documents.

§ 6.2.2 If part of the Contractor's Work depends for proper execution or results upon construction or operations by the Owner or a separate contractor, the Contractor shall, prior to proceeding with that portion of the Work, promptly report to the Architect apparent discrepancies or defects in such other construction that would render it unsuitable for such proper execution and results. Failure of the Contractor so to report shall constitute an acknowledgment that the Owner's or separate contractor's completed or partially completed construction is fit and proper to receive the Contractor's Work, except as to defects not then reasonably discoverable.

§ 6.2.3 The Contractor shall reimburse the Owner for costs the Owner incurs that are payable to a separate contractor because of the Contractor's delays, improperly timed activities or defective construction. The Owner shall be responsible to the Contractor for costs the Contractor incurs because of a separate contractor's delays, improperly timed activities, damage to the Work or defective construction.

§ 6.2.4 The Contractor shall promptly remedy damage the Contractor wrongfully causes to completed or partially completed construction or to property of the Owner or separate contractors as provided in Section 10.2.5.

§ 6.2.5 The Owner and each separate contractor shall have the same responsibilities for cutting and patching as are described for the Contractor in Section 3.14.

§ 6.3 OWNER'S RIGHT TO CLEAN UP

If a dispute arises among the Contractor, separate contractors and the Owner as to the responsibility under their respective contracts for maintaining the premises and surrounding area free from waste materials and rubbish, the Owner may clean up and the Architect will allocate the cost among those responsible.

AIA Document A201™ – 2007. Copyright © 1911, 1915, 1918, 1925, 1937, 1951, 1958, 1961, 1963, 1966, 1970, 1976, 1987, 1997 and 2007 by The American Institute of Architects. All rights reserved. WARNING: This AIA® Document is protected by U.S. Copyright Law and International Treaties. Unauthorized reproduction or distribution of this AIA® Document, or any portion of it, may result in severe civil and criminal penalties, and will be prosecuted to the maximum extent possible under the law. This document was produced by AIA software at 16:08:16 on 04/01/2013 under Order No.3625291867_1 which expires on 08/10/2013, and is not for resale.
User Notes:

ARTICLE 7 CHANGES IN THE WORK

§ 7.1 GENERAL

§ 7.1.1 Changes in the Work may be accomplished after execution of the Contract, and without invalidating the Contract, by Change Order, Construction Change Directive or order for a minor change in the Work, subject to the limitations stated in this Article 7 and elsewhere in the Contract Documents.

§ 7.1.2 A Change Order shall be based upon agreement among the Owner, Contractor and Architect; a Construction Change Directive requires agreement by the Owner and Architect and may or may not be agreed to by the Contractor; an order for a minor change in the Work may be issued by the Architect alone.

§ 7.1.3 Changes in the Work shall be performed under applicable provisions of the Contract Documents, and the Contractor shall proceed promptly, unless otherwise provided in the Change Order, Construction Change Directive or order for a minor change in the Work.

§ 7.2 CHANGE ORDERS

§ 7.2.1 A Change Order is a written instrument prepared by the Architect and signed by the Owner, Contractor and Architect stating their agreement upon all of the following:

- .1 The change in the Work;
- .2 The amount of the adjustment, if any, in the Contract Sum; and
- .3 The extent of the adjustment, if any, in the Contract Time.

§ 7.3 CONSTRUCTION CHANGE DIRECTIVES

§ 7.3.1 A Construction Change Directive is a written order prepared by the Architect and signed by the Owner and Architect, directing a change in the Work prior to agreement on adjustment, if any, in the Contract Sum or Contract Time, or both. The Owner may by Construction Change Directive, without invalidating the Contract, order changes in the Work within the general scope of the Contract consisting of additions, deletions or other revisions, the Contract Sum and Contract Time being adjusted accordingly.

§ 7.3.2 A Construction Change Directive shall be used in the absence of total agreement on the terms of a Change Order.

§ 7.3.3 If the Construction Change Directive provides for an adjustment to the Contract Sum, the adjustment shall be based on one of the following methods:

- .1 Mutual acceptance of a lump sum properly itemized and supported by sufficient substantiating data to permit evaluation;
- .2 Unit prices stated in the Contract Documents or subsequently agreed upon;
- .3 Cost to be determined in a manner agreed upon by the parties and a mutually acceptable fixed or percentage fee; or
- .4 As provided in Section 7.3.7.

§ 7.3.4 If unit prices are stated in the Contract Documents or subsequently agreed upon, and if quantities originally contemplated are materially changed in a proposed Change Order or Construction Change Directive so that application of such unit prices to quantities of Work proposed will cause substantial inequity to the Owner or Contractor, the applicable unit prices shall be equitably adjusted.

§ 7.3.5 Upon receipt of a Construction Change Directive, the Contractor shall promptly proceed with the change in the Work involved and advise the Architect of the Contractor's agreement or disagreement with the method, if any, provided in the Construction Change Directive for determining the proposed adjustment in the Contract Sum or Contract Time.

§ 7.3.6 A Construction Change Directive signed by the Contractor indicates the Contractor's agreement therewith, including adjustment in Contract Sum and Contract Time or the method for determining them. Such agreement shall be effective immediately and shall be recorded as a Change Order.

§ 7.3.7 If the Contractor does not respond promptly or disagrees with the method for adjustment in the Contract Sum, the Architect shall determine the method and the adjustment on the basis of reasonable expenditures and savings of those performing the Work attributable to the change, including, in case of an increase in the Contract Sum, an amount

AIA Document A201™ – 2007. Copyright © 1911, 1915, 1918, 1925, 1937, 1951, 1958, 1961, 1963, 1966, 1970, 1976, 1987, 1997 and 2007 by The American Institute of Architects. All rights reserved. WARNING: This AIA® Document is protected by U.S. Copyright Law and International Treaties. Unauthorized reproduction or distribution of this AIA® Document, or any portion of it, may result in severe civil and criminal penalties, and will be prosecuted to the maximum extent possible under the law. This document was produced by AIA software at 16:08:16 on 04/01/2013 under Order No.3625291867_1 which expires on 08/10/2013, and is not for resale.
User Notes:

for overhead and profit as set forth in the Agreement, or if no such amount is set forth in the Agreement, a reasonable amount. In such case, and also under Section 7.3.3.3, the Contractor shall keep and present, in such form as the Architect may prescribe, an itemized accounting together with appropriate supporting data. Unless otherwise provided in the Contract Documents, costs for the purposes of this Section 7.3.7 shall be limited to the following:

.1 Costs of labor, including social security, old age and unemployment insurance, fringe benefits required by agreement or custom, and workers' compensation insurance;
.2 Costs of materials, supplies and equipment, including cost of transportation, whether incorporated or consumed;
.3 Rental costs of machinery and equipment, exclusive of hand tools, whether rented from the Contractor or others;
.4 Costs of premiums for all bonds and insurance, permit fees, and sales, use or similar taxes related to the Work; and
.5 Additional costs of supervision and field office personnel directly attributable to the change.

§ 7.3.8 The amount of credit to be allowed by the Contractor to the Owner for a deletion or change that results in a net decrease in the Contract Sum shall be actual net cost as confirmed by the Architect. When both additions and credits covering related Work or substitutions are involved in a change, the allowance for overhead and profit shall be figured on the basis of net increase, if any, with respect to that change.

§ 7.3.9 Pending final determination of the total cost of a Construction Change Directive to the Owner, the Contractor may request payment for Work completed under the Construction Change Directive in Applications for Payment. The Architect will make an interim determination for purposes of monthly certification for payment for those costs and certify for payment the amount that the Architect determines, in the Architect's professional judgment, to be reasonably justified. The Architect's interim determination of cost shall adjust the Contract Sum on the same basis as a Change Order, subject to the right of either party to disagree and assert a Claim in accordance with Article 15.

§ 7.3.10 When the Owner and Contractor agree with a determination made by the Architect concerning the adjustments in the Contract Sum and Contract Time, or otherwise reach agreement upon the adjustments, such agreement shall be effective immediately and the Architect will prepare a Change Order. Change Orders may be issued for all or any part of a Construction Change Directive.

§ 7.4 MINOR CHANGES IN THE WORK

The Architect has authority to order minor changes in the Work not involving adjustment in the Contract Sum or extension of the Contract Time and not inconsistent with the intent of the Contract Documents. Such changes will be effected by written order signed by the Architect and shall be binding on the Owner and Contractor.

ARTICLE 8 TIME

§ 8.1 DEFINITIONS

§ 8.1.1 Unless otherwise provided, Contract Time is the period of time, including authorized adjustments, allotted in the Contract Documents for Substantial Completion of the Work.

§ 8.1.2 The date of commencement of the Work is the date established in the Agreement.

§ 8.1.3 The date of Substantial Completion is the date certified by the Architect in accordance with Section 9.8.

§ 8.1.4 The term "day" as used in the Contract Documents shall mean calendar day unless otherwise specifically defined.

§ 8.2 PROGRESS AND COMPLETION

§ 8.2.1 Time limits stated in the Contract Documents are of the essence of the Contract. By executing the Agreement the Contractor confirms that the Contract Time is a reasonable period for performing the Work.

§ 8.2.2 The Contractor shall not knowingly, except by agreement or instruction of the Owner in writing, prematurely commence operations on the site or elsewhere prior to the effective date of insurance required by Article 11 to be furnished by the Contractor and Owner. The date of commencement of the Work shall not be changed by the effective date of such insurance.

AIA Document A201™ – 2007. Copyright © 1911, 1915, 1918, 1925, 1937, 1951, 1958, 1961, 1963, 1966, 1970, 1976, 1987, 1997 and 2007 by The American Institute of Architects. All rights reserved. WARNING: This AIA® Document is protected by U.S. Copyright Law and International Treaties. Unauthorized reproduction or distribution of this AIA® Document, or any portion of it, may result in severe civil and criminal penalties, and will be prosecuted to the maximum extent possible under the law. This document was produced by AIA software at 16:08:16 on 04/01/2013 under Order No.3625291867_1 which expires on 08/10/2013, and is not for resale.
User Notes:

§ 8.2.3 The Contractor shall proceed expeditiously with adequate forces and shall achieve Substantial Completion within the Contract Time.

§ 8.3 DELAYS AND EXTENSIONS OF TIME

§ 8.3.1 If the Contractor is delayed at any time in the commencement or progress of the Work by an act or neglect of the Owner or Architect, or of an employee of either, or of a separate contractor employed by the Owner; or by changes ordered in the Work; or by labor disputes, fire, unusual delay in deliveries, unavoidable casualties or other causes beyond the Contractor's control; or by delay authorized by the Owner pending mediation and arbitration; or by other causes that the Architect determines may justify delay, then the Contract Time shall be extended by Change Order for such reasonable time as the Architect may determine.

§ 8.3.2 Claims relating to time shall be made in accordance with applicable provisions of Article 15.

§ 8.3.3 This Section 8.3 does not preclude recovery of damages for delay by either party under other provisions of the Contract Documents.

ARTICLE 9 PAYMENTS AND COMPLETION

§ 9.1 CONTRACT SUM

The Contract Sum is stated in the Agreement and, including authorized adjustments, is the total amount payable by the Owner to the Contractor for performance of the Work under the Contract Documents.

§ 9.2 SCHEDULE OF VALUES

Where the Contract is based on a stipulated sum or Guaranteed Maximum Price, the Contractor shall submit to the Architect, before the first Application for Payment, a schedule of values allocating the entire Contract Sum to the various portions of the Work and prepared in such form and supported by such data to substantiate its accuracy as the Architect may require. This schedule, unless objected to by the Architect, shall be used as a basis for reviewing the Contractor's Applications for Payment.

§ 9.3 APPLICATIONS FOR PAYMENT

§ 9.3.1 At least ten days before the date established for each progress payment, the Contractor shall submit to the Architect an itemized Application for Payment prepared in accordance with the schedule of values, if required under Section 9.2., for completed portions of the Work. Such application shall be notarized, if required, and supported by such data substantiating the Contractor's right to payment as the Owner or Architect may require, such as copies of requisitions from Subcontractors and material suppliers, and shall reflect retainage if provided for in the Contract Documents.

§ 9.3.1.1 As provided in Section 7.3.9, such applications may include requests for payment on account of changes in the Work that have been properly authorized by Construction Change Directives, or by interim determinations of the Architect, but not yet included in Change Orders.

§ 9.3.1.2 Applications for Payment shall not include requests for payment for portions of the Work for which the Contractor does not intend to pay a Subcontractor or material supplier, unless such Work has been performed by others whom the Contractor intends to pay.

§ 9.3.2 Unless otherwise provided in the Contract Documents, payments shall be made on account of materials and equipment delivered and suitably stored at the site for subsequent incorporation in the Work. If approved in advance by the Owner, payment may similarly be made for materials and equipment suitably stored off the site at a location agreed upon in writing. Payment for materials and equipment stored on or off the site shall be conditioned upon compliance by the Contractor with procedures satisfactory to the Owner to establish the Owner's title to such materials and equipment or otherwise protect the Owner's interest, and shall include the costs of applicable insurance, storage and transportation to the site for such materials and equipment stored off the site.

§ 9.3.3 The Contractor warrants that title to all Work covered by an Application for Payment will pass to the Owner no later than the time of payment. The Contractor further warrants that upon submittal of an Application for Payment all Work for which Certificates for Payment have been previously issued and payments received from the Owner shall, to the best of the Contractor's knowledge, information and belief, be free and clear of liens, claims, security interests or

AIA Document A201™ – 2007. Copyright © 1911, 1915, 1918, 1925, 1937, 1951, 1958, 1961, 1963, 1966, 1970, 1976, 1987, 1997 and 2007 by The American Institute of Architects. All rights reserved. WARNING: This AIA® Document is protected by U.S. Copyright Law and International Treaties. Unauthorized reproduction or distribution of this AIA® Document, or any portion of it, may result in severe civil and criminal penalties, and will be prosecuted to the maximum extent possible under the law. This document was produced by AIA software at 16:08:16 on 04/01/2013 under Order No.3625291867_1 which expires on 08/10/2013, and is not for resale.
User Notes:

encumbrances in favor of the Contractor, Subcontractors, material suppliers, or other persons or entities making a claim by reason of having provided labor, materials and equipment relating to the Work.

§ 9.4 CERTIFICATES FOR PAYMENT

§ 9.4.1 The Architect will, within seven days after receipt of the Contractor's Application for Payment, either issue to the Owner a Certificate for Payment, with a copy to the Contractor, for such amount as the Architect determines is properly due, or notify the Contractor and Owner in writing of the Architect's reasons for withholding certification in whole or in part as provided in Section 9.5.1.

§ 9.4.2 The issuance of a Certificate for Payment will constitute a representation by the Architect to the Owner, based on the Architect's evaluation of the Work and the data comprising the Application for Payment, that, to the best of the Architect's knowledge, information and belief, the Work has progressed to the point indicated and that the quality of the Work is in accordance with the Contract Documents. The foregoing representations are subject to an evaluation of the Work for conformance with the Contract Documents upon Substantial Completion, to results of subsequent tests and inspections, to correction of minor deviations from the Contract Documents prior to completion and to specific qualifications expressed by the Architect. The issuance of a Certificate for Payment will further constitute a representation that the Contractor is entitled to payment in the amount certified. However, the issuance of a Certificate for Payment will not be a representation that the Architect has (1) made exhaustive or continuous on-site inspections to check the quality or quantity of the Work, (2) reviewed construction means, methods, techniques, sequences or procedures, (3) reviewed copies of requisitions received from Subcontractors and material suppliers and other data requested by the Owner to substantiate the Contractor's right to payment, or (4) made examination to ascertain how or for what purpose the Contractor has used money previously paid on account of the Contract Sum.

§ 9.5 DECISIONS TO WITHHOLD CERTIFICATION

§ 9.5.1 The Architect may withhold a Certificate for Payment in whole or in part, to the extent reasonably necessary to protect the Owner, if in the Architect's opinion the representations to the Owner required by Section 9.4.2 cannot be made. If the Architect is unable to certify payment in the amount of the Application, the Architect will notify the Contractor and Owner as provided in Section 9.4.1. If the Contractor and Architect cannot agree on a revised amount, the Architect will promptly issue a Certificate for Payment for the amount for which the Architect is able to make such representations to the Owner. The Architect may also withhold a Certificate for Payment or, because of subsequently discovered evidence, may nullify the whole or a part of a Certificate for Payment previously issued, to such extent as may be necessary in the Architect's opinion to protect the Owner from loss for which the Contractor is responsible, including loss resulting from acts and omissions described in Section 3.3.2, because of

- **.1** defective Work not remedied;
- **.2** third party claims filed or reasonable evidence indicating probable filing of such claims unless security acceptable to the Owner is provided by the Contractor;
- **.3** failure of the Contractor to make payments properly to Subcontractors or for labor, materials or equipment;
- **.4** reasonable evidence that the Work cannot be completed for the unpaid balance of the Contract Sum;
- **.5** damage to the Owner or a separate contractor;
- **.6** reasonable evidence that the Work will not be completed within the Contract Time, and that the unpaid balance would not be adequate to cover actual or liquidated damages for the anticipated delay; or
- **.7** repeated failure to carry out the Work in accordance with the Contract Documents.

§ 9.5.2 When the above reasons for withholding certification are removed, certification will be made for amounts previously withheld.

§ 9.5.3 If the Architect withholds certification for payment under Section 9.5.1.3, the Owner may, at its sole option, issue joint checks to the Contractor and to any Subcontractor or material or equipment suppliers to whom the Contractor failed to make payment for Work properly performed or material or equipment suitably delivered. If the Owner makes payments by joint check, the Owner shall notify the Architect and the Architect will reflect such payment on the next Certificate for Payment.

§ 9.6 PROGRESS PAYMENTS

§ 9.6.1 After the Architect has issued a Certificate for Payment, the Owner shall make payment in the manner and within the time provided in the Contract Documents, and shall so notify the Architect.

AIA Document A201™ – 2007. Copyright © 1911, 1915, 1918, 1925, 1937, 1951, 1958, 1961, 1963, 1966, 1970, 1976, 1987, 1997 and 2007 by The American Institute of Architects. All rights reserved. WARNING: This AIA® Document is protected by U.S. Copyright Law and International Treaties. Unauthorized reproduction or distribution of this AIA® Document, or any portion of it, may result in severe civil and criminal penalties, and will be prosecuted to the maximum extent possible under the law. This document was produced by AIA software at 16:08:16 on 04/01/2013 under Order No.3625291867_1 which expires on 08/10/2013, and is not for resale.
User Notes:

§ 9.6.2 The Contractor shall pay each Subcontractor no later than seven days after receipt of payment from the Owner the amount to which the Subcontractor is entitled, reflecting percentages actually retained from payments to the Contractor on account of the Subcontractor's portion of the Work. The Contractor shall, by appropriate agreement with each Subcontractor, require each Subcontractor to make payments to Sub-subcontractors in a similar manner.

§ 9.6.3 The Architect will, on request, furnish to a Subcontractor, if practicable, information regarding percentages of completion or amounts applied for by the Contractor and action taken thereon by the Architect and Owner on account of portions of the Work done by such Subcontractor.

§ 9.6.4 The Owner has the right to request written evidence from the Contractor that the Contractor has properly paid Subcontractors and material and equipment suppliers amounts paid by the Owner to the Contractor for subcontracted Work. If the Contractor fails to furnish such evidence within seven days, the Owner shall have the right to contact Subcontractors to ascertain whether they have been properly paid. Neither the Owner nor Architect shall have an obligation to pay or to see to the payment of money to a Subcontractor, except as may otherwise be required by law.

§ 9.6.5 Contractor payments to material and equipment suppliers shall be treated in a manner similar to that provided in Sections 9.6.2, 9.6.3 and 9.6.4.

§ 9.6.6 A Certificate for Payment, a progress payment, or partial or entire use or occupancy of the Project by the Owner shall not constitute acceptance of Work not in accordance with the Contract Documents.

§ 9.6.7 Unless the Contractor provides the Owner with a payment bond in the full penal sum of the Contract Sum, payments received by the Contractor for Work properly performed by Subcontractors and suppliers shall be held by the Contractor for those Subcontractors or suppliers who performed Work or furnished materials, or both, under contract with the Contractor for which payment was made by the Owner. Nothing contained herein shall require money to be placed in a separate account and not commingled with money of the Contractor, shall create any fiduciary liability or tort liability on the part of the Contractor for breach of trust or shall entitle any person or entity to an award of punitive damages against the Contractor for breach of the requirements of this provision.

§ 9.7 FAILURE OF PAYMENT

If the Architect does not issue a Certificate for Payment, through no fault of the Contractor, within seven days after receipt of the Contractor's Application for Payment, or if the Owner does not pay the Contractor within seven days after the date established in the Contract Documents the amount certified by the Architect or awarded by binding dispute resolution, then the Contractor may, upon seven additional days' written notice to the Owner and Architect, stop the Work until payment of the amount owing has been received. The Contract Time shall be extended appropriately and the Contract Sum shall be increased by the amount of the Contractor's reasonable costs of shut-down, delay and start-up, plus interest as provided for in the Contract Documents.

§ 9.8 SUBSTANTIAL COMPLETION

§ 9.8.1 Substantial Completion is the stage in the progress of the Work when the Work or designated portion thereof is sufficiently complete in accordance with the Contract Documents so that the Owner can occupy or utilize the Work for its intended use.

§ 9.8.2 When the Contractor considers that the Work, or a portion thereof which the Owner agrees to accept separately, is substantially complete, the Contractor shall prepare and submit to the Architect a comprehensive list of items to be completed or corrected prior to final payment. Failure to include an item on such list does not alter the responsibility of the Contractor to complete all Work in accordance with the Contract Documents.

§ 9.8.3 Upon receipt of the Contractor's list, the Architect will make an inspection to determine whether the Work or designated portion thereof is substantially complete. If the Architect's inspection discloses any item, whether or not included on the Contractor's list, which is not sufficiently complete in accordance with the Contract Documents so that the Owner can occupy or utilize the Work or designated portion thereof for its intended use, the Contractor shall, before issuance of the Certificate of Substantial Completion, complete or correct such item upon notification by the Architect. In such case, the Contractor shall then submit a request for another inspection by the Architect to determine Substantial Completion.

AIA Document A201™ – 2007. Copyright © 1911, 1915, 1918, 1925, 1937, 1951, 1958, 1961, 1963, 1966, 1970, 1976, 1987, 1997 and 2007 by The American Institute of Architects. All rights reserved. WARNING: This AIA® Document is protected by U.S. Copyright Law and International Treaties. Unauthorized reproduction or distribution of this AIA® Document, or any portion of it, may result in severe civil and criminal penalties, and will be prosecuted to the maximum extent possible under the law. This document was produced by AIA software at 16:08:16 on 04/01/2013 under Order No.3625291867_1 which expires on 08/10/2013, and is not for resale.
User Notes:

§ **9.8.4** When the Work or designated portion thereof is substantially complete, the Architect will prepare a Certificate of Substantial Completion that shall establish the date of Substantial Completion, shall establish responsibilities of the Owner and Contractor for security, maintenance, heat, utilities, damage to the Work and insurance, and shall fix the time within which the Contractor shall finish all items on the list accompanying the Certificate. Warranties required by the Contract Documents shall commence on the date of Substantial Completion of the Work or designated portion thereof unless otherwise provided in the Certificate of Substantial Completion.

§ **9.8.5** The Certificate of Substantial Completion shall be submitted to the Owner and Contractor for their written acceptance of responsibilities assigned to them in such Certificate. Upon such acceptance and consent of surety, if any, the Owner shall make payment of retainage applying to such Work or designated portion thereof. Such payment shall be adjusted for Work that is incomplete or not in accordance with the requirements of the Contract Documents.

§ 9.9 PARTIAL OCCUPANCY OR USE

§ **9.9.1** The Owner may occupy or use any completed or partially completed portion of the Work at any stage when such portion is designated by separate agreement with the Contractor, provided such occupancy or use is consented to by the insurer as required under Section 11.3.1.5 and authorized by public authorities having jurisdiction over the Project. Such partial occupancy or use may commence whether or not the portion is substantially complete, provided the Owner and Contractor have accepted in writing the responsibilities assigned to each of them for payments, retainage, if any, security, maintenance, heat, utilities, damage to the Work and insurance, and have agreed in writing concerning the period for correction of the Work and commencement of warranties required by the Contract Documents. When the Contractor considers a portion substantially complete, the Contractor shall prepare and submit a list to the Architect as provided under Section 9.8.2. Consent of the Contractor to partial occupancy or use shall not be unreasonably withheld. The stage of the progress of the Work shall be determined by written agreement between the Owner and Contractor or, if no agreement is reached, by decision of the Architect.

§ **9.9.2** Immediately prior to such partial occupancy or use, the Owner, Contractor and Architect shall jointly inspect the area to be occupied or portion of the Work to be used in order to determine and record the condition of the Work.

§ **9.9.3** Unless otherwise agreed upon, partial occupancy or use of a portion or portions of the Work shall not constitute acceptance of Work not complying with the requirements of the Contract Documents.

§ 9.10 FINAL COMPLETION AND FINAL PAYMENT

§ **9.10.1** Upon receipt of the Contractor's written notice that the Work is ready for final inspection and acceptance and upon receipt of a final Application for Payment, the Architect will promptly make such inspection and, when the Architect finds the Work acceptable under the Contract Documents and the Contract fully performed, the Architect will promptly issue a final Certificate for Payment stating that to the best of the Architect's knowledge, information and belief, and on the basis of the Architect's on-site visits and inspections, the Work has been completed in accordance with terms and conditions of the Contract Documents and that the entire balance found to be due the Contractor and noted in the final Certificate is due and payable. The Architect's final Certificate for Payment will constitute a further representation that conditions listed in Section 9.10.2 as precedent to the Contractor's being entitled to final payment have been fulfilled.

§ **9.10.2** Neither final payment nor any remaining retained percentage shall become due until the Contractor submits to the Architect (1) an affidavit that payrolls, bills for materials and equipment, and other indebtedness connected with the Work for which the Owner or the Owner's property might be responsible or encumbered (less amounts withheld by Owner) have been paid or otherwise satisfied, (2) a certificate evidencing that insurance required by the Contract Documents to remain in force after final payment is currently in effect and will not be canceled or allowed to expire until at least 30 days' prior written notice has been given to the Owner, (3) a written statement that the Contractor knows of no substantial reason that the insurance will not be renewable to cover the period required by the Contract Documents, (4) consent of surety, if any, to final payment and (5), if required by the Owner, other data establishing payment or satisfaction of obligations, such as receipts, releases and waivers of liens, claims, security interests or encumbrances arising out of the Contract, to the extent and in such form as may be designated by the Owner. If a Subcontractor refuses to furnish a release or waiver required by the Owner, the Contractor may furnish a bond satisfactory to the Owner to indemnify the Owner against such lien. If such lien remains unsatisfied after payments are made, the Contractor shall refund to the Owner all money that the Owner may be compelled to pay in discharging such lien, including all costs and reasonable attorneys' fees.

Init.
/
AIA Document A201™ – 2007. Copyright © 1911, 1915, 1918, 1925, 1937, 1951, 1958, 1961, 1963, 1966, 1970, 1976, 1987, 1997 and 2007 by The American Institute of Architects. All rights reserved. WARNING: This AIA® Document is protected by U.S. Copyright Law and International Treaties. Unauthorized reproduction or distribution of this AIA® Document, or any portion of it, may result in severe civil and criminal penalties, and will be prosecuted to the maximum extent possible under the law. This document was produced by AIA software at 16:08:16 on 04/01/2013 under Order No.3625291867_1 which expires on 08/10/2013, and is not for resale.
User Notes:
(1162498114)

§ 9.10.3 If, after Substantial Completion of the Work, final completion thereof is materially delayed through no fault of the Contractor or by issuance of Change Orders affecting final completion, and the Architect so confirms, the Owner shall, upon application by the Contractor and certification by the Architect, and without terminating the Contract, make payment of the balance due for that portion of the Work fully completed and accepted. If the remaining balance for Work not fully completed or corrected is less than retainage stipulated in the Contract Documents, and if bonds have been furnished, the written consent of surety to payment of the balance due for that portion of the Work fully completed and accepted shall be submitted by the Contractor to the Architect prior to certification of such payment. Such payment shall be made under terms and conditions governing final payment, except that it shall not constitute a waiver of claims.

§ 9.10.4 The making of final payment shall constitute a waiver of Claims by the Owner except those arising from

- **.1** liens, Claims, security interests or encumbrances arising out of the Contract and unsettled;
- **.2** failure of the Work to comply with the requirements of the Contract Documents; or
- **.3** terms of special warranties required by the Contract Documents.

§ 9.10.5 Acceptance of final payment by the Contractor, a Subcontractor or material supplier shall constitute a waiver of claims by that payee except those previously made in writing and identified by that payee as unsettled at the time of final Application for Payment.

ARTICLE 10 PROTECTION OF PERSONS AND PROPERTY

§ 10.1 SAFETY PRECAUTIONS AND PROGRAMS

The Contractor shall be responsible for initiating, maintaining and supervising all safety precautions and programs in connection with the performance of the Contract.

§ 10.2 SAFETY OF PERSONS AND PROPERTY

§ 10.2.1 The Contractor shall take reasonable precautions for safety of, and shall provide reasonable protection to prevent damage, injury or loss to

- **.1** employees on the Work and other persons who may be affected thereby;
- **.2** the Work and materials and equipment to be incorporated therein, whether in storage on or off the site, under care, custody or control of the Contractor or the Contractor's Subcontractors or Sub-subcontractors; and
- **.3** other property at the site or adjacent thereto, such as trees, shrubs, lawns, walks, pavements, roadways, structures and utilities not designated for removal, relocation or replacement in the course of construction.

§ 10.2.2 The Contractor shall comply with and give notices required by applicable laws, statutes, ordinances, codes, rules and regulations, and lawful orders of public authorities bearing on safety of persons or property or their protection from damage, injury or loss.

§ 10.2.3 The Contractor shall erect and maintain, as required by existing conditions and performance of the Contract, reasonable safeguards for safety and protection, including posting danger signs and other warnings against hazards, promulgating safety regulations and notifying owners and users of adjacent sites and utilities.

§ 10.2.4 When use or storage of explosives or other hazardous materials or equipment or unusual methods are necessary for execution of the Work, the Contractor shall exercise utmost care and carry on such activities under supervision of properly qualified personnel.

§ 10.2.5 The Contractor shall promptly remedy damage and loss (other than damage or loss insured under property insurance required by the Contract Documents) to property referred to in Sections 10.2.1.2 and 10.2.1.3 caused in whole or in part by the Contractor, a Subcontractor, a Sub-subcontractor, or anyone directly or indirectly employed by any of them, or by anyone for whose acts they may be liable and for which the Contractor is responsible under Sections 10.2.1.2 and 10.2.1.3, except damage or loss attributable to acts or omissions of the Owner or Architect or anyone directly or indirectly employed by either of them, or by anyone for whose acts either of them may be liable, and not attributable to the fault or negligence of the Contractor. The foregoing obligations of the Contractor are in addition to the Contractor's obligations under Section 3.18.

AIA Document A201™ – 2007. Copyright © 1911, 1915, 1918, 1925, 1937, 1951, 1958, 1961, 1963, 1966, 1970, 1976, 1987, 1997 and 2007 by The American Institute of Architects. All rights reserved. WARNING: This AIA® Document is protected by U.S. Copyright Law and International Treaties. Unauthorized reproduction or distribution of this AIA® Document, or any portion of it, may result in severe civil and criminal penalties, and will be prosecuted to the maximum extent possible under the law. This document was produced by AIA software at 16:08:16 on 04/01/2013 under Order No.3625291867_1 which expires on 08/10/2013, and is not for resale.
User Notes: (1162498114)

§ 10.2.6 The Contractor shall designate a responsible member of the Contractor's organization at the site whose duty shall be the prevention of accidents. This person shall be the Contractor's superintendent unless otherwise designated by the Contractor in writing to the Owner and Architect.

§ 10.2.7 The Contractor shall not permit any part of the construction or site to be loaded so as to cause damage or create an unsafe condition.

§ 10.2.8 INJURY OR DAMAGE TO PERSON OR PROPERTY
If either party suffers injury or damage to person or property because of an act or omission of the other party, or of others for whose acts such party is legally responsible, written notice of such injury or damage, whether or not insured, shall be given to the other party within a reasonable time not exceeding 21 days after discovery. The notice shall provide sufficient detail to enable the other party to investigate the matter.

§ 10.3 HAZARDOUS MATERIALS
§ 10.3.1 The Contractor is responsible for compliance with any requirements included in the Contract Documents regarding hazardous materials. If the Contractor encounters a hazardous material or substance not addressed in the Contract Documents and if reasonable precautions will be inadequate to prevent foreseeable bodily injury or death to persons resulting from a material or substance, including but not limited to asbestos or polychlorinated biphenyl (PCB), encountered on the site by the Contractor, the Contractor shall, upon recognizing the condition, immediately stop Work in the affected area and report the condition to the Owner and Architect in writing.

§ 10.3.2 Upon receipt of the Contractor's written notice, the Owner shall obtain the services of a licensed laboratory to verify the presence or absence of the material or substance reported by the Contractor and, in the event such material or substance is found to be present, to cause it to be rendered harmless. Unless otherwise required by the Contract Documents, the Owner shall furnish in writing to the Contractor and Architect the names and qualifications of persons or entities who are to perform tests verifying the presence or absence of such material or substance or who are to perform the task of removal or safe containment of such material or substance. The Contractor and the Architect will promptly reply to the Owner in writing stating whether or not either has reasonable objection to the persons or entities proposed by the Owner. If either the Contractor or Architect has an objection to a person or entity proposed by the Owner, the Owner shall propose another to whom the Contractor and the Architect have no reasonable objection. When the material or substance has been rendered harmless, Work in the affected area shall resume upon written agreement of the Owner and Contractor. By Change Order, the Contract Time shall be extended appropriately and the Contract Sum shall be increased in the amount of the Contractor's reasonable additional costs of shut-down, delay and start-up.

§ 10.3.3 To the fullest extent permitted by law, the Owner shall indemnify and hold harmless the Contractor, Subcontractors, Architect, Architect's consultants and agents and employees of any of them from and against claims, damages, losses and expenses, including but not limited to attorneys' fees, arising out of or resulting from performance of the Work in the affected area if in fact the material or substance presents the risk of bodily injury or death as described in Section 10.3.1 and has not been rendered harmless, provided that such claim, damage, loss or expense is attributable to bodily injury, sickness, disease or death, or to injury to or destruction of tangible property (other than the Work itself), except to the extent that such damage, loss or expense is due to the fault or negligence of the party seeking indemnity.

§ 10.3.4 The Owner shall not be responsible under this Section 10.3 for materials or substances the Contractor brings to the site unless such materials or substances are required by the Contract Documents. The Owner shall be responsible for materials or substances required by the Contract Documents, except to the extent of the Contractor's fault or negligence in the use and handling of such materials or substances.

§ 10.3.5 The Contractor shall indemnify the Owner for the cost and expense the Owner incurs (1) for remediation of a material or substance the Contractor brings to the site and negligently handles, or (2) where the Contractor fails to perform its obligations under Section 10.3.1, except to the extent that the cost and expense are due to the Owner's fault or negligence.

§ 10.3.6 If, without negligence on the part of the Contractor, the Contractor is held liable by a government agency for the cost of remediation of a hazardous material or substance solely by reason of performing Work as required by the Contract Documents, the Owner shall indemnify the Contractor for all cost and expense thereby incurred.

AIA Document A201™ – 2007. Copyright © 1911, 1915, 1918, 1925, 1937, 1951, 1958, 1961, 1963, 1966, 1970, 1976, 1987, 1997 and 2007 by The American Institute of Architects. All rights reserved. WARNING: This AIA® Document is protected by U.S. Copyright Law and International Treaties. Unauthorized reproduction or distribution of this AIA® Document, or any portion of it, may result in severe civil and criminal penalties, and will be prosecuted to the maximum extent possible under the law. This document was produced by AIA software at 16:08:16 on 04/01/2013 under Order No.3625291867_1 which expires on 08/10/2013, and is not for resale.
User Notes:

§ 10.4 EMERGENCIES
In an emergency affecting safety of persons or property, the Contractor shall act, at the Contractor's discretion, to prevent threatened damage, injury or loss. Additional compensation or extension of time claimed by the Contractor on account of an emergency shall be determined as provided in Article 15 and Article 7.

ARTICLE 11 INSURANCE AND BONDS
§ 11.1 CONTRACTOR'S LIABILITY INSURANCE
§ 11.1.1 The Contractor shall purchase from and maintain in a company or companies lawfully authorized to do business in the jurisdiction in which the Project is located such insurance as will protect the Contractor from claims set forth below which may arise out of or result from the Contractor's operations and completed operations under the Contract and for which the Contractor may be legally liable, whether such operations be by the Contractor or by a Subcontractor or by anyone directly or indirectly employed by any of them, or by anyone for whose acts any of them may be liable:

- **.1** Claims under workers' compensation, disability benefit and other similar employee benefit acts that are applicable to the Work to be performed;
- **.2** Claims for damages because of bodily injury, occupational sickness or disease, or death of the Contractor's employees;
- **.3** Claims for damages because of bodily injury, sickness or disease, or death of any person other than the Contractor's employees;
- **.4** Claims for damages insured by usual personal injury liability coverage;
- **.5** Claims for damages, other than to the Work itself, because of injury to or destruction of tangible property, including loss of use resulting therefrom;
- **.6** Claims for damages because of bodily injury, death of a person or property damage arising out of ownership, maintenance or use of a motor vehicle;
- **.7** Claims for bodily injury or property damage arising out of completed operations; and
- **.8** Claims involving contractual liability insurance applicable to the Contractor's obligations under Section 3.18.

§ 11.1.2 The insurance required by Section 11.1.1 shall be written for not less than limits of liability specified in the Contract Documents or required by law, whichever coverage is greater. Coverages, whether written on an occurrence or claims-made basis, shall be maintained without interruption from the date of commencement of the Work until the date of final payment and termination of any coverage required to be maintained after final payment, and, with respect to the Contractor's completed operations coverage, until the expiration of the period for correction of Work or for such other period for maintenance of completed operations coverage as specified in the Contract Documents.

§ 11.1.3 Certificates of insurance acceptable to the Owner shall be filed with the Owner prior to commencement of the Work and thereafter upon renewal or replacement of each required policy of insurance. These certificates and the insurance policies required by this Section 11.1 shall contain a provision that coverages afforded under the policies will not be canceled or allowed to expire until at least 30 days' prior written notice has been given to the Owner. An additional certificate evidencing continuation of liability coverage, including coverage for completed operations, shall be submitted with the final Application for Payment as required by Section 9.10.2 and thereafter upon renewal or replacement of such coverage until the expiration of the time required by Section 11.1.2. Information concerning reduction of coverage on account of revised limits or claims paid under the General Aggregate, or both, shall be furnished by the Contractor with reasonable promptness.

§ 11.1.4 The Contractor shall cause the commercial liability coverage required by the Contract Documents to include (1) the Owner, the Architect and the Architect's Consultants as additional insureds for claims caused in whole or in part by the Contractor's negligent acts or omissions during the Contractor's operations; and (2) the Owner as an additional insured for claims caused in whole or in part by the Contractor's negligent acts or omissions during the Contractor's completed operations.

§ 11.2 (DELETED)

§ 11.3 PROPERTY INSURANCE
§ 11.3.1 Unless otherwise provided, the Owner shall purchase and maintain, in a company or companies lawfully authorized to do business in the jurisdiction in which the Project is located, property insurance written on a builder's

AIA Document A201™ – 2007. Copyright © 1911, 1915, 1918, 1925, 1937, 1951, 1958, 1961, 1963, 1966, 1970, 1976, 1987, 1997 and 2007 by The American Institute of Architects. All rights reserved. WARNING: This AIA® Document is protected by U.S. Copyright Law and International Treaties. Unauthorized reproduction or distribution of this AIA® Document, or any portion of it, may result in severe civil and criminal penalties, and will be prosecuted to the maximum extent possible under the law. This document was produced by AIA software at 16:08:16 on 04/01/2013 under Order No.3625291867_1 which expires on 08/10/2013, and is not for resale.
User Notes:

risk "all-risk" or equivalent policy form in the amount of the initial Contract Sum, plus value of subsequent Contract Modifications and cost of materials supplied or installed by others, comprising total value for the entire Project at the site on a replacement cost basis without optional deductibles. Such property insurance shall be maintained, unless otherwise provided in the Contract Documents or otherwise agreed in writing by all persons and entities who are beneficiaries of such insurance, until final payment has been made as provided in Section 9.10 or until no person or entity other than the Owner has an insurable interest in the property required by this Section 11.3 to be covered, whichever is later. This insurance shall include interests of the Owner, the Contractor, Subcontractors and Sub-subcontractors in the Project.

§ 11.3.1.1 Property insurance shall be on an "all-risk" or equivalent policy form and shall include, without limitation, insurance against the perils of fire (with extended coverage) and physical loss or damage including, without duplication of coverage, theft, vandalism, malicious mischief, collapse, earthquake, flood, windstorm, falsework, testing and startup, temporary buildings and debris removal including demolition occasioned by enforcement of any applicable legal requirements, and shall cover reasonable compensation for Architect's and Contractor's services and expenses required as a result of such insured loss.

§ 11.3.1.2 If the Owner does not intend to purchase such property insurance required by the Contract and with all of the coverages in the amount described above, the Owner shall so inform the Contractor in writing prior to commencement of the Work. The Contractor may then effect insurance that will protect the interests of the Contractor, Subcontractors and Sub-subcontractors in the Work, and by appropriate Change Order the cost thereof shall be charged to the Owner. If the Contractor is damaged by the failure or neglect of the Owner to purchase or maintain insurance as described above, without so notifying the Contractor in writing, then the Owner shall bear all reasonable costs properly attributable thereto.

§ 11.3.1.3 If the property insurance requires deductibles, the Owner shall pay costs not covered because of such deductibles.

§ 11.3.1.4 This property insurance shall cover portions of the Work stored off the site, and also portions of the Work in transit.

§ 11.3.1.5 Partial occupancy or use in accordance with Section 9.9 shall not commence until the insurance company or companies providing property insurance have consented to such partial occupancy or use by endorsement or otherwise. The Owner and the Contractor shall take reasonable steps to obtain consent of the insurance company or companies and shall, without mutual written consent, take no action with respect to partial occupancy or use that would cause cancellation, lapse or reduction of insurance.

§ 11.3.2 BOILER AND MACHINERY INSURANCE
The Owner shall purchase and maintain boiler and machinery insurance required by the Contract Documents or by law, which shall specifically cover such insured objects during installation and until final acceptance by the Owner; this insurance shall include interests of the Owner, Contractor, Subcontractors and Sub-subcontractors in the Work, and the Owner and Contractor shall be named insureds.

§ 11.3.3 LOSS OF USE INSURANCE
The Owner, at the Owner's option, may purchase and maintain such insurance as will insure the Owner against loss of use of the Owner's property due to fire or other hazards, however caused. The Owner waives all rights of action against the Contractor for loss of use of the Owner's property, including consequential losses due to fire or other hazards however caused.

§ 11.3.4 If the Contractor requests in writing that insurance for risks other than those described herein or other special causes of loss be included in the property insurance policy, the Owner shall, if possible, include such insurance, and the cost thereof shall be charged to the Contractor by appropriate Change Order.

§ 11.3.5 If during the Project construction period the Owner insures properties, real or personal or both, at or adjacent to the site by property insurance under policies separate from those insuring the Project, or if after final payment property insurance is to be provided on the completed Project through a policy or policies other than those insuring the Project during the construction period, the Owner shall waive all rights in accordance with the terms of Section 11.3.7

AIA Document A201™ – 2007. Copyright © 1911, 1915, 1918, 1925, 1937, 1951, 1958, 1961, 1963, 1966, 1970, 1976, 1987, 1997 and 2007 by The American Institute of Architects. All rights reserved. WARNING: This AIA® Document is protected by U.S. Copyright Law and International Treaties. Unauthorized reproduction or distribution of this AIA® Document, or any portion of it, may result in severe civil and criminal penalties, and will be prosecuted to the maximum extent possible under the law. This document was produced by AIA software at 16:08:16 on 04/01/2013 under Order No.3625291867_1 which expires on 08/10/2013, and is not for resale.
User Notes:

for damages caused by fire or other causes of loss covered by this separate property insurance. All separate policies shall provide this waiver of subrogation by endorsement or otherwise.

§ 11.3.6 Before an exposure to loss may occur, the Owner shall file with the Contractor a copy of each policy that includes insurance coverages required by this Section 11.3. Each policy shall contain all generally applicable conditions, definitions, exclusions and endorsements related to this Project. Each policy shall contain a provision that the policy will not be canceled or allowed to expire, and that its limits will not be reduced, until at least 30 days' prior written notice has been given to the Contractor.

§ 11.3.7 WAIVERS OF SUBROGATION
The Owner and Contractor waive all rights against (1) each other and any of their subcontractors, sub-subcontractors, agents and employees, each of the other, and (2) the Architect, Architect's consultants, separate contractors described in Article 6, if any, and any of their subcontractors, sub-subcontractors, agents and employees, for damages caused by fire or other causes of loss to the extent covered by property insurance obtained pursuant to this Section 11.3 or other property insurance applicable to the Work, except such rights as they have to proceeds of such insurance held by the Owner as fiduciary. The Owner or Contractor, as appropriate, shall require of the Architect, Architect's consultants, separate contractors described in Article 6, if any, and the subcontractors, sub-subcontractors, agents and employees of any of them, by appropriate agreements, written where legally required for validity, similar waivers each in favor of other parties enumerated herein. The policies shall provide such waivers of subrogation by endorsement or otherwise. A waiver of subrogation shall be effective as to a person or entity even though that person or entity would otherwise have a duty of indemnification, contractual or otherwise, did not pay the insurance premium directly or indirectly, and whether or not the person or entity had an insurable interest in the property damaged.

§ 11.3.8 A loss insured under the Owner's property insurance shall be adjusted by the Owner as fiduciary and made payable to the Owner as fiduciary for the insureds, as their interests may appear, subject to requirements of any applicable mortgagee clause and of Section 11.3.10. The Contractor shall pay Subcontractors their just shares of insurance proceeds received by the Contractor, and by appropriate agreements, written where legally required for validity, shall require Subcontractors to make payments to their Sub-subcontractors in similar manner.

§ 11.3.9 If required in writing by a party in interest, the Owner as fiduciary shall, upon occurrence of an insured loss, give bond for proper performance of the Owner's duties. The cost of required bonds shall be charged against proceeds received as fiduciary. The Owner shall deposit in a separate account proceeds so received, which the Owner shall distribute in accordance with such agreement as the parties in interest may reach, or as determined in accordance with the method of binding dispute resolution selected in the Agreement between the Owner and Contractor. If after such loss no other special agreement is made and unless the Owner terminates the Contract for convenience, replacement of damaged property shall be performed by the Contractor after notification of a Change in the Work in accordance with Article 7.

§ 11.3.10 The Owner as fiduciary shall have power to adjust and settle a loss with insurers unless one of the parties in interest shall object in writing within five days after occurrence of loss to the Owner's exercise of this power; if such objection is made, the dispute shall be resolved in the manner selected by the Owner and Contractor as the method of binding dispute resolution in the Agreement. If the Owner and Contractor have selected arbitration as the method of binding dispute resolution, the Owner as fiduciary shall make settlement with insurers or, in the case of a dispute over distribution of insurance proceeds, in accordance with the directions of the arbitrators.

§ 11.4 PERFORMANCE BOND AND PAYMENT BOND
§ 11.4.1 The Owner shall have the right to require the Contractor to furnish bonds covering faithful performance of the Contract and payment of obligations arising thereunder as stipulated in bidding requirements or specifically required in the Contract Documents on the date of execution of the Contract.

§ 11.4.2 Upon the request of any person or entity appearing to be a potential beneficiary of bonds covering payment of obligations arising under the Contract, the Contractor shall promptly furnish a copy of the bonds or shall authorize a copy to be furnished.

Init.
/
AIA Document A201™ – 2007. Copyright © 1911, 1915, 1918, 1925, 1937, 1951, 1958, 1961, 1963, 1966, 1970, 1976, 1987, 1997 and 2007 by The American Institute of Architects. All rights reserved. WARNING: This AIA® Document is protected by U.S. Copyright Law and International Treaties. Unauthorized reproduction or distribution of this AIA® Document, or any portion of it, may result in severe civil and criminal penalties, and will be prosecuted to the maximum extent possible under the law. This document was produced by AIA software at 16:08:16 on 04/01/2013 under Order No.3625291867_1 which expires on 08/10/2013, and is not for resale.
User Notes:
(1162498114)

ARTICLE 12 UNCOVERING AND CORRECTION OF WORK

§ 12.1 UNCOVERING OF WORK

§ 12.1.1 If a portion of the Work is covered contrary to the Architect's request or to requirements specifically expressed in the Contract Documents, it must, if requested in writing by the Architect, be uncovered for the Architect's examination and be replaced at the Contractor's expense without change in the Contract Time.

§ 12.1.2 If a portion of the Work has been covered that the Architect has not specifically requested to examine prior to its being covered, the Architect may request to see such Work and it shall be uncovered by the Contractor. If such Work is in accordance with the Contract Documents, costs of uncovering and replacement shall, by appropriate Change Order, be at the Owner's expense. If such Work is not in accordance with the Contract Documents, such costs and the cost of correction shall be at the Contractor's expense unless the condition was caused by the Owner or a separate contractor in which event the Owner shall be responsible for payment of such costs.

§ 12.2 CORRECTION OF WORK

§ 12.2.1 BEFORE OR AFTER SUBSTANTIAL COMPLETION

The Contractor shall promptly correct Work rejected by the Architect or failing to conform to the requirements of the Contract Documents, whether discovered before or after Substantial Completion and whether or not fabricated, installed or completed. Costs of correcting such rejected Work, including additional testing and inspections, the cost of uncovering and replacement, and compensation for the Architect's services and expenses made necessary thereby, shall be at the Contractor's expense.

§ 12.2.2 AFTER SUBSTANTIAL COMPLETION

§ 12.2.2.1 In addition to the Contractor's obligations under Section 3.5, if, within one year after the date of Substantial Completion of the Work or designated portion thereof or after the date for commencement of warranties established under Section 9.9.1, or by terms of an applicable special warranty required by the Contract Documents, any of the Work is found to be not in accordance with the requirements of the Contract Documents, the Contractor shall correct it promptly after receipt of written notice from the Owner to do so unless the Owner has previously given the Contractor a written acceptance of such condition. The Owner shall give such notice promptly after discovery of the condition. During the one-year period for correction of Work, if the Owner fails to notify the Contractor and give the Contractor an opportunity to make the correction, the Owner waives the rights to require correction by the Contractor and to make a claim for breach of warranty. If the Contractor fails to correct nonconforming Work within a reasonable time during that period after receipt of notice from the Owner or Architect, the Owner may correct it in accordance with Section 2.4.

§ 12.2.2.2 The one-year period for correction of Work shall be extended with respect to portions of Work first performed after Substantial Completion by the period of time between Substantial Completion and the actual completion of that portion of the Work.

§ 12.2.2.3 The one-year period for correction of Work shall not be extended by corrective Work performed by the Contractor pursuant to this Section 12.2.

§ 12.2.3 The Contractor shall remove from the site portions of the Work that are not in accordance with the requirements of the Contract Documents and are neither corrected by the Contractor nor accepted by the Owner.

§ 12.2.4 The Contractor shall bear the cost of correcting destroyed or damaged construction, whether completed or partially completed, of the Owner or separate contractors caused by the Contractor's correction or removal of Work that is not in accordance with the requirements of the Contract Documents.

§ 12.2.5 Nothing contained in this Section 12.2 shall be construed to establish a period of limitation with respect to other obligations the Contractor has under the Contract Documents. Establishment of the one-year period for correction of Work as described in Section 12.2.2 relates only to the specific obligation of the Contractor to correct the Work, and has no relationship to the time within which the obligation to comply with the Contract Documents may be sought to be enforced, nor to the time within which proceedings may be commenced to establish the Contractor's liability with respect to the Contractor's obligations other than specifically to correct the Work.

Init.
/
AIA Document A201™ – 2007. Copyright © 1911, 1915, 1918, 1925, 1937, 1951, 1958, 1961, 1963, 1966, 1970, 1976, 1987, 1997 and 2007 by The American Institute of Architects. All rights reserved. WARNING: This AIA® Document is protected by U.S. Copyright Law and International Treaties. Unauthorized reproduction or distribution of this AIA® Document, or any portion of it, may result in severe civil and criminal penalties, and will be prosecuted to the maximum extent possible under the law. This document was produced by AIA software at 16:08:16 on 04/01/2013 under Order No.3625291867_1 which expires on 08/10/2013, and is not for resale.
User Notes:
(1162498114)

§ 12.3 ACCEPTANCE OF NONCONFORMING WORK
If the Owner prefers to accept Work that is not in accordance with the requirements of the Contract Documents, the Owner may do so instead of requiring its removal and correction, in which case the Contract Sum will be reduced as appropriate and equitable. Such adjustment shall be effected whether or not final payment has been made.

ARTICLE 13 MISCELLANEOUS PROVISIONS
§ 13.1 GOVERNING LAW
The Contract shall be governed by the law of the place where the Project is located except that, if the parties have selected arbitration as the method of binding dispute resolution, the Federal Arbitration Act shall govern Section 15.4.

§ 13.2 SUCCESSORS AND ASSIGNS
§ 13.2.1 The Owner and Contractor respectively bind themselves, their partners, successors, assigns and legal representatives to covenants, agreements and obligations contained in the Contract Documents. Except as provided in Section 13.2.2, neither party to the Contract shall assign the Contract as a whole without written consent of the other. If either party attempts to make such an assignment without such consent, that party shall nevertheless remain legally responsible for all obligations under the Contract.

§ 13.2.2 The Owner may, without consent of the Contractor, assign the Contract to a lender providing construction financing for the Project, if the lender assumes the Owner's rights and obligations under the Contract Documents. The Contractor shall execute all consents reasonably required to facilitate such assignment.

§ 13.3 WRITTEN NOTICE
Written notice shall be deemed to have been duly served if delivered in person to the individual, to a member of the firm or entity, or to an officer of the corporation for which it was intended; or if delivered at, or sent by registered or certified mail or by courier service providing proof of delivery to, the last business address known to the party giving notice.

§ 13.4 RIGHTS AND REMEDIES
§ 13.4.1 Duties and obligations imposed by the Contract Documents and rights and remedies available thereunder shall be in addition to and not a limitation of duties, obligations, rights and remedies otherwise imposed or available by law.

§ 13.4.2 No action or failure to act by the Owner, Architect or Contractor shall constitute a waiver of a right or duty afforded them under the Contract, nor shall such action or failure to act constitute approval of or acquiescence in a breach there under, except as may be specifically agreed in writing.

§ 13.5 TESTS AND INSPECTIONS
§ 13.5.1 Tests, inspections and approvals of portions of the Work shall be made as required by the Contract Documents and by applicable laws, statutes, ordinances, codes, rules and regulations or lawful orders of public authorities. Unless otherwise provided, the Contractor shall make arrangements for such tests, inspections and approvals with an independent testing laboratory or entity acceptable to the Owner, or with the appropriate public authority, and shall bear all related costs of tests, inspections and approvals. The Contractor shall give the Architect timely notice of when and where tests and inspections are to be made so that the Architect may be present for such procedures. The Owner shall bear costs of (1) tests, inspections or approvals that do not become requirements until after bids are received or negotiations concluded, and (2) tests, inspections or approvals where building codes or applicable laws or regulations prohibit the Owner from delegating their cost to the Contractor.

§ 13.5.2 If the Architect, Owner or public authorities having jurisdiction determine that portions of the Work require additional testing, inspection or approval not included under Section 13.5.1, the Architect will, upon written authorization from the Owner, instruct the Contractor to make arrangements for such additional testing, inspection or approval by an entity acceptable to the Owner, and the Contractor shall give timely notice to the Architect of when and where tests and inspections are to be made so that the Architect may be present for such procedures. Such costs, except as provided in Section 13.5.3, shall be at the Owner's expense.

§ 13.5.3 If such procedures for testing, inspection or approval under Sections 13.5.1 and 13.5.2 reveal failure of the portions of the Work to comply with requirements established by the Contract Documents, all costs made necessary by

AIA Document A201™ – 2007. Copyright © 1911, 1915, 1918, 1925, 1937, 1951, 1958, 1961, 1963, 1966, 1970, 1976, 1987, 1997 and 2007 by The American Institute of Architects. All rights reserved. WARNING: This AIA® Document is protected by U.S. Copyright Law and International Treaties. Unauthorized reproduction or distribution of this AIA® Document, or any portion of it, may result in severe civil and criminal penalties, and will be prosecuted to the maximum extent possible under the law. This document was produced by AIA software at 16:08:16 on 04/01/2013 under Order No.3625291867_1 which expires on 08/10/2013, and is not for resale.
User Notes:

such failure including those of repeated procedures and compensation for the Architect's services and expenses shall be at the Contractor's expense.

§ 13.5.4 Required certificates of testing, inspection or approval shall, unless otherwise required by the Contract Documents, be secured by the Contractor and promptly delivered to the Architect.

§ 13.5.5 If the Architect is to observe tests, inspections or approvals required by the Contract Documents, the Architect will do so promptly and, where practicable, at the normal place of testing.

§ 13.5.6 Tests or inspections conducted pursuant to the Contract Documents shall be made promptly to avoid unreasonable delay in the Work.

§ 13.6 INTEREST

Payments due and unpaid under the Contract Documents shall bear interest from the date payment is due at such rate as the parties may agree upon in writing or, in the absence thereof, at the legal rate prevailing from time to time at the place where the Project is located.

§ 13.7 TIME LIMITS ON CLAIMS

The Owner and Contractor shall commence all claims and causes of action, whether in contract, tort, breach of warranty or otherwise, against the other arising out of or related to the Contract in accordance with the requirements of the final dispute resolution method selected in the Agreement within the time period specified by applicable law, but in any case not more than 10 years after the date of Substantial Completion of the Work. The Owner and Contractor waive all claims and causes of action not commenced in accordance with this Section 13.7.

ARTICLE 14 TERMINATION OR SUSPENSION OF THE CONTRACT

§ 14.1 TERMINATION BY THE CONTRACTOR

§ 14.1.1 The Contractor may terminate the Contract if the Work is stopped for a period of 30 consecutive days through no act or fault of the Contractor or a Subcontractor, Sub-subcontractor or their agents or employees or any other persons or entities performing portions of the Work under direct or indirect contract with the Contractor, for any of the following reasons:

- .1 Issuance of an order of a court or other public authority having jurisdiction that requires all Work to be stopped;
- .2 An act of government, such as a declaration of national emergency that requires all Work to be stopped;
- .3 Because the Architect has not issued a Certificate for Payment and has not notified the Contractor of the reason for withholding certification as provided in Section 9.4.1, or because the Owner has not made payment on a Certificate for Payment within the time stated in the Contract Documents; or
- .4 The Owner has failed to furnish to the Contractor promptly, upon the Contractor's request, reasonable evidence as required by Section 2.2.1.

§ 14.1.2 The Contractor may terminate the Contract if, through no act or fault of the Contractor or a Subcontractor, Sub-subcontractor or their agents or employees or any other persons or entities performing portions of the Work under direct or indirect contract with the Contractor, repeated suspensions, delays or interruptions of the entire Work by the Owner as described in Section 14.3 constitute in the aggregate more than 100 percent of the total number of days scheduled for completion, or 120 days in any 365-day period, whichever is less.

§ 14.1.3 If one of the reasons described in Section 14.1.1 or 14.1.2 exists, the Contractor may, upon seven days' written notice to the Owner and Architect, terminate the Contract and recover from the Owner payment for Work executed, including reasonable overhead and profit, costs incurred by reason of such termination, and damages.

§ 14.1.4 If the Work is stopped for a period of 60 consecutive days through no act or fault of the Contractor or a Subcontractor or their agents or employees or any other persons performing portions of the Work under contract with the Contractor because the Owner has repeatedly failed to fulfill the Owner's obligations under the Contract Documents with respect to matters important to the progress of the Work, the Contractor may, upon seven additional days' written notice to the Owner and the Architect, terminate the Contract and recover from the Owner as provided in Section 14.1.3.

AIA Document A201™ – 2007. Copyright © 1911, 1915, 1918, 1925, 1937, 1951, 1958, 1961, 1963, 1966, 1970, 1976, 1987, 1997 and 2007 by The American Institute of Architects. All rights reserved. WARNING: This AIA® Document is protected by U.S. Copyright Law and International Treaties. Unauthorized reproduction or distribution of this AIA® Document, or any portion of it, may result in severe civil and criminal penalties, and will be prosecuted to the maximum extent possible under the law. This document was produced by AIA software at 16:08:16 on 04/01/2013 under Order No.3625291867_1 which expires on 08/10/2013, and is not for resale.
User Notes:

§ 14.2 TERMINATION BY THE OWNER FOR CAUSE

§ 14.2.1 The Owner may terminate the Contract if the Contractor

- .1 repeatedly refuses or fails to supply enough properly skilled workers or proper materials;
- .2 fails to make payment to Subcontractors for materials or labor in accordance with the respective agreements between the Contractor and the Subcontractors;
- .3 repeatedly disregards applicable laws, statutes, ordinances, codes, rules and regulations, or lawful orders of a public authority; or
- .4 otherwise is guilty of substantial breach of a provision of the Contract Documents.

§ 14.2.2 When any of the above reasons exist, the Owner, upon certification by the Initial Decision Maker that sufficient cause exists to justify such action, may without prejudice to any other rights or remedies of the Owner and after giving the Contractor and the Contractor's surety, if any, seven days' written notice, terminate employment of the Contractor and may, subject to any prior rights of the surety:

- .1 Exclude the Contractor from the site and take possession of all materials, equipment, tools, and construction equipment and machinery thereon owned by the Contractor;
- .2 Accept assignment of subcontracts pursuant to Section 5.4; and
- .3 Finish the Work by whatever reasonable method the Owner may deem expedient. Upon written request of the Contractor, the Owner shall furnish to the Contractor a detailed accounting of the costs incurred by the Owner in finishing the Work.

§ 14.2.3 When the Owner terminates the Contract for one of the reasons stated in Section 14.2.1, the Contractor shall not be entitled to receive further payment until the Work is finished.

§ 14.2.4 If the unpaid balance of the Contract Sum exceeds costs of finishing the Work, including compensation for the Architect's services and expenses made necessary thereby, and other damages incurred by the Owner and not expressly waived, such excess shall be paid to the Contractor. If such costs and damages exceed the unpaid balance, the Contractor shall pay the difference to the Owner. The amount to be paid to the Contractor or Owner, as the case may be, shall be certified by the Initial Decision Maker, upon application, and this obligation for payment shall survive termination of the Contract.

§ 14.3 SUSPENSION BY THE OWNER FOR CONVENIENCE

§ 14.3.1 The Owner may, without cause, order the Contractor in writing to suspend, delay or interrupt the Work in whole or in part for such period of time as the Owner may determine.

§ 14.3.2 The Contract Sum and Contract Time shall be adjusted for increases in the cost and time caused by suspension, delay or interruption as described in Section 14.3.1. Adjustment of the Contract Sum shall include profit. No adjustment shall be made to the extent

- .1 that performance is, was or would have been so suspended, delayed or interrupted by another cause for which the Contractor is responsible; or
- .2 that an equitable adjustment is made or denied under another provision of the Contract.

§ 14.4 TERMINATION BY THE OWNER FOR CONVENIENCE

§ 14.4.1 The Owner may, at any time, terminate the Contract for the Owner's convenience and without cause.

§ 14.4.2 Upon receipt of written notice from the Owner of such termination for the Owner's convenience, the Contractor shall

- .1 cease operations as directed by the Owner in the notice;
- .2 take actions necessary, or that the Owner may direct, for the protection and preservation of the Work; and
- .3 except for Work directed to be performed prior to the effective date of termination stated in the notice, terminate all existing subcontracts and purchase orders and enter into no further subcontracts and purchase orders.

§ 14.4.3 In case of such termination for the Owner's convenience, the Contractor shall be entitled to receive payment for Work executed, and costs incurred by reason of such termination, along with reasonable overhead and profit on the Work not executed.

Init.
/
AIA Document A201™ – 2007. Copyright © 1911, 1915, 1918, 1925, 1937, 1951, 1958, 1961, 1963, 1966, 1970, 1976, 1987, 1997 and 2007 by The American Institute of Architects. All rights reserved. WARNING: This AIA® Document is protected by U.S. Copyright Law and International Treaties. Unauthorized reproduction or distribution of this AIA® Document, or any portion of it, may result in severe civil and criminal penalties, and will be prosecuted to the maximum extent possible under the law. This document was produced by AIA software at 16:08:16 on 04/01/2013 under Order No.3625291867_1 which expires on 08/10/2013, and is not for resale.
User Notes:
(1162498114)

ARTICLE 15 CLAIMS AND DISPUTES

§ 15.1 CLAIMS

§ 15.1.1 DEFINITION

A Claim is a demand or assertion by one of the parties seeking, as a matter of right, payment of money, or other relief with respect to the terms of the Contract. The term "Claim" also includes other disputes and matters in question between the Owner and Contractor arising out of or relating to the Contract. The responsibility to substantiate Claims shall rest with the party making the Claim.

§ 15.1.2 NOTICE OF CLAIMS

Claims by either the Owner or Contractor must be initiated by written notice to the other party and to the Initial Decision Maker with a copy sent to the Architect, if the Architect is not serving as the Initial Decision Maker. Claims by either party must be initiated within 21 days after occurrence of the event giving rise to such Claim or within 21 days after the claimant first recognizes the condition giving rise to the Claim, whichever is later.

§ 15.1.3 CONTINUING CONTRACT PERFORMANCE

Pending final resolution of a Claim, except as otherwise agreed in writing or as provided in Section 9.7 and Article 14, the Contractor shall proceed diligently with performance of the Contract and the Owner shall continue to make payments in accordance with the Contract Documents. The Architect will prepare Change Orders and issue Certificates for Payment in accordance with the decisions of the Initial Decision Maker.

§ 15.1.4 CLAIMS FOR ADDITIONAL COST

If the Contractor wishes to make a Claim for an increase in the Contract Sum, written notice as provided herein shall be given before proceeding to execute the Work. Prior notice is not required for Claims relating to an emergency endangering life or property arising under Section 10.4.

§ 15.1.5 CLAIMS FOR ADDITIONAL TIME

§ 15.1.5.1 If the Contractor wishes to make a Claim for an increase in the Contract Time, written notice as provided herein shall be given. The Contractor's Claim shall include an estimate of cost and of probable effect of delay on progress of the Work. In the case of a continuing delay, only one Claim is necessary.

§ 15.1.5.2 If adverse weather conditions are the basis for a Claim for additional time, such Claim shall be documented by data substantiating that weather conditions were abnormal for the period of time, could not have been reasonably anticipated and had an adverse effect on the scheduled construction.

§ 15.1.6 CLAIMS FOR CONSEQUENTIAL DAMAGES

The Contractor and Owner waive Claims against each other for consequential damages arising out of or relating to this Contract. This mutual waiver includes

- .1 damages incurred by the Owner for rental expenses, for losses of use, income, profit, financing, business and reputation, and for loss of management or employee productivity or of the services of such persons; and
- .2 damages incurred by the Contractor for principal office expenses including the compensation of personnel stationed there, for losses of financing, business and reputation, and for loss of profit except anticipated profit arising directly from the Work.

This mutual waiver is applicable, without limitation, to all consequential damages due to either party's termination in accordance with Article 14. Nothing contained in this Section 15.1.6 shall be deemed to preclude an award of liquidated damages, when applicable, in accordance with the requirements of the Contract Documents.

§ 15.2 INITIAL DECISION

§ 15.2.1 Claims, excluding those arising under Sections 10.3, 10.4, 11.3.9, and 11.3.10, shall be referred to the Initial Decision Maker for initial decision. The Architect will serve as the Initial Decision Maker, unless otherwise indicated in the Agreement. Except for those Claims excluded by this Section 15.2.1, an initial decision shall be required as a condition precedent to mediation of any Claim arising prior to the date final payment is due, unless 30 days have passed after the Claim has been referred to the Initial Decision Maker with no decision having been rendered. Unless the Initial Decision Maker and all affected parties agree, the Initial Decision Maker will not decide disputes between the Contractor and persons or entities other than the Owner.

AIA Document A201™ – 2007. Copyright © 1911, 1915, 1918, 1925, 1937, 1951, 1958, 1961, 1963, 1966, 1970, 1976, 1987, 1997 and 2007 by The American Institute of Architects. All rights reserved. WARNING: This AIA® Document is protected by U.S. Copyright Law and International Treaties. Unauthorized reproduction or distribution of this AIA® Document, or any portion of it, may result in severe civil and criminal penalties, and will be prosecuted to the maximum extent possible under the law. This document was produced by AIA software at 16:08:16 on 04/01/2013 under Order No.3625291867_1 which expires on 08/10/2013, and is not for resale.
User Notes:

§ 15.2.2 The Initial Decision Maker will review Claims and within ten days of the receipt of a Claim take one or more of the following actions: (1) request additional supporting data from the claimant or a response with supporting data from the other party, (2) reject the Claim in whole or in part, (3) approve the Claim, (4) suggest a compromise, or (5) advise the parties that the Initial Decision Maker is unable to resolve the Claim if the Initial Decision Maker lacks sufficient information to evaluate the merits of the Claim or if the Initial Decision Maker concludes that, in the Initial Decision Maker's sole discretion, it would be inappropriate for the Initial Decision Maker to resolve the Claim.

§ 15.2.3 In evaluating Claims, the Initial Decision Maker may, but shall not be obligated to, consult with or seek information from either party or from persons with special knowledge or expertise who may assist the Initial Decision Maker in rendering a decision. The Initial Decision Maker may request the Owner to authorize retention of such persons at the Owner's expense.

§ 15.2.4 If the Initial Decision Maker requests a party to provide a response to a Claim or to furnish additional supporting data, such party shall respond, within ten days after receipt of such request, and shall either (1) provide a response on the requested supporting data, (2) advise the Initial Decision Maker when the response or supporting data will be furnished or (3) advise the Initial Decision Maker that no supporting data will be furnished. Upon receipt of the response or supporting data, if any, the Initial Decision Maker will either reject or approve the Claim in whole or in part.

§ 15.2.5 The Initial Decision Maker will render an initial decision approving or rejecting the Claim, or indicating that the Initial Decision Maker is unable to resolve the Claim. This initial decision shall (1) be in writing; (2) state the reasons therefor; and (3) notify the parties and the Architect, if the Architect is not serving as the Initial Decision Maker, of any change in the Contract Sum or Contract Time or both. The initial decision shall be final and binding on the parties but subject to mediation and, if the parties fail to resolve their dispute through mediation, to binding dispute resolution.

§ 15.2.6 Either party may file for mediation of an initial decision at any time, subject to the terms of Section 15.2.6.1.

§ 15.2.6.1 Either party may, within 30 days from the date of an initial decision, demand in writing that the other party file for mediation within 60 days of the initial decision. If such a demand is made and the party receiving the demand fails to file for mediation within the time required, then both parties waive their rights to mediate or pursue binding dispute resolution proceedings with respect to the initial decision.

§ 15.2.7 In the event of a Claim against the Contractor, the Owner may, but is not obligated to, notify the surety, if any, of the nature and amount of the Claim. If the Claim relates to a possibility of a Contractor's default, the Owner may, but is not obligated to, notify the surety and request the surety's assistance in resolving the controversy.

§ 15.2.8 If a Claim relates to or is the subject of a mechanic's lien, the party asserting such Claim may proceed in accordance with applicable law to comply with the lien notice or filing deadlines.

§ 15.3 MEDIATION

§ 15.3.1 Claims, disputes, or other matters in controversy arising out of or related to the Contract except those waived as provided for in Sections 9.10.4, 9.10.5, and 15.1.6 shall be subject to mediation as a condition precedent to binding dispute resolution.

§ 15.3.2 (DELETED)

§ 15.3.3 (DELETED)

§ 15.4 ARBITRATION

§ 15.4.1 If the parties have selected arbitration as the method for binding dispute resolution in the Agreement, any Claim subject to, but not resolved by, mediation shall be subject to arbitration which, unless the parties mutually agree otherwise, shall be administered by the American Arbitration Association in accordance with its Construction Industry Arbitration Rules in effect on the date of the Agreement. A demand for arbitration shall be made in writing, delivered to the other party to the Contract, and filed with the person or entity administering the arbitration. The party filing a notice of demand for arbitration must assert in the demand all Claims then known to that party on which arbitration is permitted to be demanded.

AIA Document A201™ – 2007. Copyright © 1911, 1915, 1918, 1925, 1937, 1951, 1958, 1961, 1963, 1966, 1970, 1976, 1987, 1997 and 2007 by The American Institute of Architects. All rights reserved. WARNING: This AIA® Document is protected by U.S. Copyright Law and International Treaties. Unauthorized reproduction or distribution of this AIA® Document, or any portion of it, may result in severe civil and criminal penalties, and will be prosecuted to the maximum extent possible under the law. This document was produced by AIA software at 16:08:16 on 04/01/2013 under Order No.3625291867_1 which expires on 08/10/2013, and is not for resale.
User Notes:

§ 15.4.1.1 A demand for arbitration shall be made no earlier than concurrently with the filing of a request for mediation, but in no event shall it be made after the date when the institution of legal or equitable proceedings based on the Claim would be barred by the applicable statute of limitations. For statute of limitations purposes, receipt of a written demand for arbitration by the person or entity administering the arbitration shall constitute the institution of legal or equitable proceedings based on the Claim.

§ 15.4.2 The award rendered by the arbitrator or arbitrators shall be final, and judgment may be entered upon it in accordance with applicable law in any court having jurisdiction thereof.

§ 15.4.3 The foregoing agreement to arbitrate and other agreements to arbitrate with an additional person or entity duly consented to by parties to the Agreement shall be specifically enforceable under applicable law in any court having jurisdiction thereof.

§ 15.4.4 CONSOLIDATION OR JOINDER

§ 15.4.4.1 Either party, at its sole discretion, may consolidate an arbitration conducted under this Agreement with any other arbitration to which it is a party provided that (1) the arbitration agreement governing the other arbitration permits consolidation, (2) the arbitrations to be consolidated substantially involve common questions of law or fact, and (3) the arbitrations employ materially similar procedural rules and methods for selecting arbitrator(s).

§ 15.4.4.2 Either party, at its sole discretion, may include by joinder persons or entities substantially involved in a common question of law or fact whose presence is required if complete relief is to be accorded in arbitration, provided that the party sought to be joined consents in writing to such joinder. Consent to arbitration involving an additional person or entity shall not constitute consent to arbitration of any claim, dispute or other matter in question not described in the written consent.

§ 15.4.4.3 The Owner and Contractor grant to any person or entity made a party to an arbitration conducted under this Section 15.4, whether by joinder or consolidation, the same rights of joinder and consolidation as the Owner and Contractor under this Agreement.

Init.
/
AIA Document A201™ – 2007. Copyright © 1911, 1915, 1918, 1925, 1937, 1951, 1958, 1961, 1963, 1966, 1970, 1976, 1987, 1997 and 2007 by The American Institute of Architects. All rights reserved. WARNING: This AIA® Document is protected by U.S. Copyright Law and International Treaties. Unauthorized reproduction or distribution of this AIA® Document, or any portion of it, may result in severe civil and criminal penalties, and will be prosecuted to the maximum extent possible under the law. This document was produced by AIA software at 16:08:16 on 04/01/2013 under Order No.3625291867_1 which expires on 08/10/2013, and is not for resale.
User Notes:
(1162498114)

Certification of Document's Authenticity

AIA® Document D401™ – 2003

I, Patrick Tenney, AIA, Vice President, hereby certify, to the best of my knowledge, information and belief, that I created the attached final document simultaneously with its associated Additions and Deletions Report and this certification at 16:08:16 on 04/01/2013 under Order No. 3625291867_1 from AIA Contract Documents software and that in preparing the attached final document I made no changes to the original text of AIA® Document A201™ – 2007, General Conditions of the Contract for Construction, as published by the AIA in its software, other than those additions and deletions shown in the associated Additions and Deletions Report.

Patrick Tenney

(Signed)

VICE PRESIDENT

(Title)

4.2.2013

(Dated)

AIA Document D401™ – 2003. Copyright © 1992 and 2003 by The American Institute of Architects. All rights reserved. WARNING: This AIA® Document is protected by U.S. Copyright Law and International Treaties. Unauthorized reproduction or distribution of this AIA® Document, or any portion of it, may result in severe civil and criminal penalties, and will be prosecuted to the maximum extent possible under the law. This document was produced by AIA software at 16:08:16 on 04/01/2013 under Order No.3625291867_1 which expires on 08/10/2013, and is not for resale.
User Notes:

(1162498114)

AGENDA REQUEST

FOR: COUNCIL MEETING OF ~~August 5, 2014~~ July 15, 2014

FROM:
CITY COUNCIL MEMBER Matthew Petty

ORDINANCE OR RESOLUTION TITLE AND SUBJECT:

AN ORDINANCE TO REPEAL § 178.05 **FOOD TRUCK LIMITED TIME PERMITS** AND ENACT A REPLACEMENT § 178.05 **FOOD TRUCK AND FOOD TRAILER LIMITED TIME PERMITS**

APPROVED FOR AGENDA:

City Council Member Matthew Petty — Date 7/1/2014

Assistant City Attorney Blake Pennington (as to form) — Date 7/1/14

Pennington, Blake

From: matt@matthewpetty.org on behalf of Matthew Petty - Fayetteville Ward 2 <citycouncil@matthewpetty.org>
Sent: Tuesday, July 01, 2014 3:14 PM
To: Pennington, Blake
Cc: Nierengarten, Peter
Subject: Re: Food trailer ordinance

This looks good. Thank you!

Would you please prepare it as an ordinance for me to send to the City Clerk?

On Tue, Jul 1, 2014 at 2:21 PM, Pennington, Blake <bpennington@fayetteville-ar.gov> wrote:

A little after lunch but here is a new draft. I have corrected Section C to be consistent and prohibit parking in marked parallel spaces. I also added the prohibition against parking in gated lots.

The language in the ordinance regarding the P&R Director's authority is broad enough that she could establish approved zones or, conversely, prohibited zones within park property, expecially with respect to safety and traffic concerns. That language doesn't restrict any authority the P&R Director has with respect to the goings on in city parks. If we added more specific language, I'm afraid that would begin to restrict her authority.

--

Blake E. Pennington

Assistant City Attorney

Tele: (479) 575-8313

bpennington@fayetteville-ar.gov

From: matt@matthewpetty.org [mailto:matt@matthewpetty.org] **On Behalf Of** Matthew Petty - Fayetteville Ward 2

Sent: Monday, June 30, 2014 11:48 AM
To: Pennington, Blake
Cc: Nierengarten, Peter
Subject: Re: Food trailer ordinance

Welcome home, Blake.

Your first draft looks great. Just two clarifications and a question:

- Section (C) is intended to allow trailers in non-marked parallel spaces. (C)(2)(g) prohibits all parallel spaces. Let's make it consistent.
- Add a prohibition against using gated public parking lots to (C).
- I want to make sure the Parks and Rec Director has broad authority for denying a permit to anyone if it would create a hazard or traffic issue. A concern has been raised about allowing trailers into the cul de sac's at Wilson Park. With the way (C) is drafted, would the Parks and Rec Director have the authority to deny the use of a cul de sac to a food trailer? Or do we need more specific language.?

I think that's it. Thanks for your help,

M

On Fri, Jun 27, 2014 at 10:16 AM, Matthew Petty - Fayetteville Ward 2 <citycouncil@matthewpetty.org> wrote:

Excellent. Thank you.

FYI, I'm going to go the other way on marked parallel spaces. I want food trailers to be able to use unmarked spaces on streets (assuming appropriate zoning, etc).

Re: cul de sacs in parks - this makes sense and should be handled through the "requires advance permission of the Parks and Rec director or designee" clause. I recommend parks staff develop a standard checklist for those phone calls which includes questions about where they plan to locate and truck/trailer status.

On Thu, Jun 26, 2014 at 5:20 PM, Nierengarten, Peter <pnierengarten@fayetteville-ar.gov> wrote:

Hi Matthew,

Thanks for the opportunity to provide comments! Parks indicated that they are generally ok with the proposed change. Their only concern is that food trailer not be allowed in the dead-end cul-de-sac streets at Wilson Park, since turning around would be a major issue for a trailer. That appears to be covered in Section C2g which states that they are prohibited from parking or vending in parallel or angled on-street parking spaces. I did propose a slight change in the description of Section C so that it is consistent with C2g by deleting the word "marked" with reference to parallel or angled parking spaces.

Also in Section C – Limited Time Permit on Public Property, this section appears to be worded to allow Food Trailers in Publicly Owned Parking Lots – I'm not sure if this was your intention or not. So, I spoke with Sharon

Waters about whether or not trailer could practically fit in public parking lots with gates and she expressed some concern. She said that trailers going into the gated lots are not allowed because it messes up the loop detection on the gate equipment. Thus when a vehicle enters with a trailer attached, the gate closes down before the trailer passes through completely causing damage to the trailer as well as our gate equipment. So, based on Sharon's feedback we may need to talk about the logistics of allowing Food Trucks in gated parking lots.

regards

Peter Nierengarten

Sustainability & Resilience Department Director

City of Fayetteville, Arkansas

479.575.8272

From: matt@matthewpetty.org [mailto:matt@matthewpetty.org] **On Behalf Of** Matthew Petty - Fayetteville Ward 2

Sent: Tuesday, June 24, 2014 4:08 PM
To: Nierengarten, Peter
Cc: Garner, Andrew; Pate, Jeremy; Marr, Don; Edmonston, Connie; Jumper, Alison

Subject: Re: Conversation with food trailer owner

Hi Peter,

I already have a draft ready to go from Blake (attached). Also, based on this email from Jeremy on May 23 (pasted after my signoff), I am pretty much ready to go. I expect Alan to bring forward an amendment to allow trailers in marked parallel spaces when this is introduced (and I expect it to fail, but perhaps the vote will be close or I am just wrong).

At this stage I'm not going to make any material changes to the framework Blake has drafted, but I would appreciate your comments on this draft as they relate to process and form. I plan to submit this to the clerk next week, barring something unforeseen. I am framing this as an oversight correction.

Best,

M

---------- Pasted message ----------
From: **Pate, Jeremy** <jpate@fayetteville-ar.gov>
Date: Fri, May 23, 2014 at 1:20 PM
Subject: RE: FW: Food trucks vs Food trailers
To: Matthew Petty - Fayetteville Ward 2 <citycouncil@matthewpetty.org>, "Olson, Leif" <lolson@fayetteville-ar.gov>, "Garner, Andrew" <agarner@fayetteville-ar.gov>, "Pennington, Blake" <bpennington@fayetteville-ar.gov>, Alan Long <longward4@gmail.com>

I don't believe we have a concern with trailers on private property, whether they issued temporary, long-term or bumping permits. I think we would also be open to allowing trailers in public parks through the lottery process, if there is adequate space for them, subject to Parks approval like any other vendor that wins a lottery ticket.

-Jeremy

--- End pasted message ---

On Tue, Jun 24, 2014 at 3:51 PM, Nierengarten, Peter <pnierengarten@fayetteville-ar.gov> wrote:

Hi Matt,

Thanks for including us in this conversation! Could you let us know when you anticipate bringing forward the amendments you mentioned below?

Staff generally agrees with the safety concerns that you expressed related to trying to parallel park food trailers and therefore we do not support allowing them in on street parallel parking spaces. I think we'd be open to discussing allowing trailers on private property, but we would need to balance that with trying to keep the nuances of the ordinance from becoming too complicated to understand and explain.

Regarding trailers in Parks, I think we need to let Connie's team weigh in on that.

Peter Nierengarten

Sustainability & Resilience Department Director

City of Fayetteville, Arkansas

479.575.8272

ORDINANCE NO. _____

AN ORDINANCE TO REPEAL § 178.05 **FOOD TRUCK LIMITED TIME PERMITS** AND ENACT A REPLACEMENT § 178.05 **FOOD TRUCK AND FOOD TRAILER LIMITED TIME PERMITS**

WHEREAS, the initial implementation of the Food Truck Limited Time Permit ordinance identified areas of concern that can be resolved by amending the ordinance; and

WHEREAS, creating a class of permits designed for both food trucks and food trailers will provide additional opportunities for mobile vendors in the City of Fayetteville.

NOW, THEREFORE, BE IT ORDAINED BY THE CITY COUNCIL OF THE CITY OF FAYETTEVILLE, ARKANSAS:

Section 1. That the City Council of the City of Fayetteville, Arkansas repeals § 178.05 **Food Truck Limited Time Permits** and enacts § 178.05 **Food Truck and Food Trailer Limited Time Permits** as shown on Exhibit "A" attached hereto.

PASSED and **APPROVED** this _____ day of _____, 2014.

APPROVED:

By: _____
LIONELD JORDAN, Mayor

ATTEST:

By: _____
SONDRA E. SMITH, City Clerk/Treasurer

EXHIBIT A

178.05 Food Truck and Food Trailer Limited Time Permits

(A) *Purpose*. This section's purpose is to create a process that allows food trucks and food trailers to locate for a limited time on public and private property. Food trucks are defined as a motorized and operationally self-contained single vehicle equipped with facilities for cooking and selling food. Food trailers are defined as a mobile food unit designed to be towed on public roads and having an enclosed area for storage, handling or preparation of food.

(B) *Limited Time Permit for Parallel Parking Spaces.* Food trucks may apply for a permit determined through a lottery drawing by the Planning Division to locate for a limited time in a marked or delineated parallel public parking space.

(1) The Planning Division will conduct a lottery in November each year for a total of three (3) Limited Time Permits for locating in parallel parking spaces on public roads. If more than nine (9) lottery applications are made Planning Staff may increase the number of permits issued not to exceed one third (1/3) of the total number of applications. Instances in which 1/3 the total number of applications results in a fraction of 0.5 or higher, the number of permits available shall be rounded up to the next whole number. These permits shall be issued on January 1st and will extend until December 31st. Food trucks may apply and participate in this lottery every year.

(2) A Limited Time Permit for Parallel Parking Spaces may be approved administratively by the Planning Division after making the following determinations:

(a) The applicant has paid an annual $100 permit fee. Food trucks shall pay the appropriate fee for the time they are located in public parking spaces. The food truck shall fit entirely within one marked parallel on-street parking space.

(b) The applicant has provided a valid copy of the County Health Department permit and proof of remittance of HMR tax to the City of Fayetteville.

(c) The applicant has the responsibility to dispose of all wastes in accordance with all applicable laws. Food trucks are not permitted to dispose of their trash in public trash receptacles.

(d) The applicant agrees to move to a different location after a four (4) hour time period. This time period includes onsite set-up and break-down time. The applicant agrees to move at least 325 feet away or out of sight/view of their previous location once their initial 4 hour time period has expired.

(e) The applicant agrees to not locate on the same side of the street directly in front of an existing restaurant.

(f) The applicant agrees to only vend towards the sidewalk side of the street and to keep the sidewalk unobstructed to allow for free flow pedestrian movement along the street.

(g) The applicant agrees to locate on public property such that they will not cause an unsafe traffic or pedestrian situation.

(h) The applicant agrees not to set up in a parking space adjacent to a parking pay station kiosk.

(i) Food trucks are prohibited from parking or vending from angled on-street parking spaces and from public parking lots in the Entertainment District or the Downtown Business District. Food trucks are prohibited from parking in marked parallel parking spaces that are posted reserved for residential use.

(j) The City reserves the right to limit food trucks from utilizing public parking spaces during special events such as; parades, Bikes, Blues and BBQ, etc. Special event permits may be available to food trucks for certain events. Contact the City's Parking Division for special event permits.

(C) *Limited Time Permit on Public Property.* Food trucks and food trailers may apply for a permit determined through a lottery drawing by the Planning Division to locate for a limited time on public property excluding on-street marked parallel or angled parking spaces. Food trucks and food trailers with this permit may also vend in City Parks with approval by the Parks and Recreation Director.

(1) The Planning Division will conduct a lottery in November each year for a total of three (3) Limited Time Permits for locating on public property. If more than nine (9) lottery applications are made Planning Staff may increase the number of permits issued not to exceed one third (1/3) of the total number of applications. Instances in which 1/3 the total number of applications results in a fraction of 0.5 or higher, the number of permits available shall be rounded up to the next whole number. These permits shall be issued on January 1st and will extend until December 31st. Food trucks may apply and participate in this lottery every year.

(2) A Limited Time Permit on Public Property may be approved administratively by the Planning Division after making the following determinations:

(a) The applicant has paid an annual $100 permit fee. Food trucks and food trailers shall fit entirely within no more than two parking spaces on public property or in a City Park and shall pay the appropriate fee for the time they are located in public parking spaces.

(b) The applicant has provided a valid copy of the County Health Department permit and proof of remittance of HMR tax to the City of Fayetteville.

(c) The applicant has the responsibility to dispose of all wastes in accordance with all applicable laws. Food trucks and food trailers are not permitted to dispose of their trash in public trash receptacles.

(d) The applicant agrees to move to a different location after a four (4) hour time period. This time period includes onsite set-up and break-down time. The applicant agrees to move at least 325 feet away or out of sight/view of their previous location once their initial 4 hour time period has expired.

(e) The applicant agrees to locate on public property such that they will not cause an unsafe traffic or pedestrian situation.

(f) The applicant agrees not to set up in a parking space adjacent to a parking pay station kiosk.

(g) Food trucks and food trailers are prohibited from parking or vending from on-street marked parallel or angled parking spaces and from gated public parking lots in the Entertainment District or the Downtown Business District. Food trailers are also prohibited from parking in marked parking spaces that are posted reserved for residential use.

(h) The City reserves the right to limit food trucks and food trailers from utilizing public parking spaces during special events such as; parades, Bikes, Blues and BBQ, etc. Special event permits may be available to food trailers for certain events. Contact the City's Parking Division for special event permits.

(D) *Limited Time Permit on Private Property.* Food trucks and food trailers may be approved administratively by the Planning Division for a Limited Time Permit to locate on private property after meeting the following conditions:

(1) The applicant has paid an annual $100 permit fee, unless they are also the holder of a public property lottery permit and they have already paid a $100 permit fee. Permits expire December 31st.

(2) The applicant has provided a valid copy of the County Health Department permit and proof of remittance of HMR tax to the City of Fayetteville.

(3) The applicant has the responsibility to dispose of all wastes in accordance with all applicable laws. Food trucks and food trailers are not permitted to dispose of their trash in public trash receptacles.

(4) The applicant has agreed to move to a different property after a four (4) hour time period. This time period includes any onsite set-up or break-down time.

(5) The property is zoned to allow for food and beverage uses and the location meets all applicable zoning requirements of the underlying zoning district. The property owner for each location must provide a written statement giving the food truck or food trailer operator permission to operate on the property. A site plan shall be provided by the applicant or property owner for each proposed site upon which the food truck or food trailler would like to temporarily locate. The vendor shall keep these records up to date with the Planning Division.

(6) The applicant agrees to locate on private property such that they will not cause an unsafe traffic or pedestrian situation.

Legistar ID No.: 2014-0303

AGENDA REQUEST

FOR: COUNCIL MEETING OF July 15, 2014

FROM:
CITY COUNCIL MEMBER Matthew Petty

ORDINANCE OR RESOLUTION TITLE AND SUBJECT:

AN ORDINANCE TO AMEND THE FAYETTEVILLE CODE BY ENACTING CHAPTER 119 **CIVIL RIGHTS ADMINISTRATION** TO PROTECT THE CIVIL RIGHTS OF FAYETTEVILLE CITIZENS AND VISITORS AND TO CREATE THE POSITION OF CIVIL RIGHTS ADMINISTRATOR FOR THE CITY OF FAYETTEVILLE

APPROVED FOR AGENDA:

City Council Member Matthew Petty — Date: 7/2/2014

Assistant City Attorney Blake Pennington (as to form) — Date: 7/2/14

Pennington, Blake

From: matt@matthewpetty.org on behalf of Matthew Petty - Fayetteville Ward 2 <citycouncil@matthewpetty.org>
Sent: Thursday, May 15, 2014 3:09 PM
To: Williams, Kit
Cc: Pennington, Blake; James Rector
Subject: Anti-Discrimination Ordinance
Attachments: Fayetteville HRO 5.15.2014.docx

Hi Kit,

Attached is a draft Anti-Discrimination Ordinance that I would like to get passed in Fayetteville. It targets discrimination in housing transactions and employment decisions.

I want to introduce it at the first meeting in July. Can you guys take a look at it and think about how it might need to be adapted for consistency with Arkansas and municipal code? I'd like to have a first meeting on it the week of the 26th (or I can do late next week).

Thanks for your help,
M

ORDINANCE NO. _____

AN ORDINANCE TO AMEND THE FAYETTEVILLE CODE BY ENACTING CHAPTER 119 **CIVIL RIGHTS ADMINISTRATION** TO PROTECT THE CIVIL RIGHTS OF FAYETTEVILLE CITIZENS AND VISITORS AND TO CREATE THE POSITION OF CIVIL RIGHTS ADMINISTRATOR FOR THE CITY OF FAYETTEVILLE

WHEREAS, the City of Fayetteville seeks to protect and safeguard the right and opportunity of all persons to be free from unfair discrimination based on real or perceived race, ethnicity, national origin, age, gender, gender identity, gender expression, familial status, marital status, socioeconomic background, religion, sexual orientation, disability and veteran status; and

WHEREAS, the City of Fayetteville seeks to promote the public health and welfare of all persons who live or work in the City of Fayetteville and to ensure that all persons within the City have equal access to employment, housing, and public accommodations.

NOW, THEREFORE, BE IT ORDAINED BY THE CITY COUNCIL OF THE CITY OF FAYETTEVILLE, ARKANSAS:

Section 1. That the City Council of the City of Fayetteville, Arkansas enacts Chapter 119 **Civil Rights Administration** as shown on Exhibit "A" attached hereto.

PASSED and **APPROVED** this _____ day of _____, 2014.

APPROVED:

By: _____
LIONELD JORDAN, Mayor

ATTEST:

By: _____
SONDRA E. SMITH, City Clerk/Treasurer

EXHIBIT A

CHAPTER 119: CIVIL RIGHTS ADMINISTRATION

119.01 Purpose

The purpose of this chapter is to protect and safeguard the right and opportunity of all persons to be free from discrimination based on real or perceived race, ethnicity, national origin, age, gender, gender identity, gender expression, familial status, marital status, socioeconomic background, religion, sexual orientation, disability and veteran status. This chapter's purpose is also to promote the public health and welfare of all persons who live or work in the City of Fayetteville and to ensure that all persons within the City have equal access to employment, housing, and public accommodations.

119.02 Definitions

(A) "Business Establishment" means any entity, however organized, which furnishes goods, services or accommodations to the general public. An otherwise qualifying establishment which has membership requirements is considered to furnish services to the general public if its membership requirements consist only of payment of fees or consist only of requirements under which a substantial portion of the residents of the city could qualify.

(B) "Civil Rights Administrator" means the person designated by the Mayor to receive, investigate and conciliate complaints brought under this chapter.

(C) "Disability" or "Disabled" means, with respect to an individual, a physical or mental impairment, a record of such an impairment, or being perceived or regarded as having such impairment. For purposes of this chapter, discrimination on the basis of disability means that no covered entity shall discriminate against a qualified individual with a disability because of that individual's disability. The term "qualified individual with a disability" shall mean an individual with a disability who, with or without reasonable accommodation, can perform the essential functions of the employment positions that the individual holds or desires.

(D) "Discriminate, Discrimination or Discriminatory" means any act, policy or practice that has the effect of subjecting any person to differential treatment as a result of that person's real or perceived race, ethnicity, national origin, age (if 18 years of age or older), gender, gender identity, gender expression, familial status, marital status, socioeconomic background, religion, sexual orientation, disability or veteran status.

(E) "Employee" means any individual employed or seeking employment from an employer.

(F) "Employer" means any person, business or organization which regularly employs five (5) or more individuals, not including the employer's parents, spouse or children. For purposes of this chapter an employer "regularly" employs five (5) individuals when the employer employs five (5) or more individuals for each working day in any twenty (20) or more calendar weeks in the current or previous calendar year. For purposes of this chapter an "employer" is also any person or entity acting on behalf of an employer, directly or indirectly, or any employment agency.

(G) "Familial status" means an individual's status as parent or legal guardian to a child or children below the age of eighteen (18) who may or may not reside with that individual.

(H) "Gender" means actual or perceived sex.

(I) "Gender Identity" means a person's gender-related identity, whether or not that identity is or is perceived to be different from that traditionally associated with the sex assigned to that individual at birth.

(J) "Gender Expression" means a person's gender-related appearance and behavior whether or not that gender expression is or is perceived to be different from that traditionally associated with the person's assigned sex at birth.

(K) "Marital status" means an individual's status as single, married, domestically partnered, divorced or widowed.

(L) "Place of public accommodation" means inns, taverns, hotels, motels, restaurants, wholesale outlets, retail outlets, banks, savings and loan associations, other financial institutions, credit information bureaus, insurance companies, dispensaries, clinics, hospitals, theaters, recreational parks and facilities, trailer camps, garages, public halls, and all other establishments within the City which offer goods, services, accommodations and entertainment to the public. A place of public accommodation does not include any institution, club or other place of accommodation, which by its nature is distinctly private.

(M) "Sexual orientation" means actual or perceived heterosexuality, homosexuality or bisexuality.

(N) "Veteran status" means an individual's status as one who served in the active military, naval or air service, and who was discharged or released under conditions other than dishonorable.

119.03 Prohibited Acts of Discrimination - Employment

(A) With regard to employment, it shall be unlawful for any employer or labor organization to engage in any of the following acts wholly or partially for a discriminatory reason:

(1) To fail to hire, refuse to hire or discharge an individual;

(2) To discriminate against any individual with respect to compensation, terms, conditions or privileges of employment, including promotion. Nothing in this section shall be construed to require any employer to provide benefits, such as insurance, to individuals not employed by the employer;

(3) To limit, segregate or classify employees in any way which would deprive or tend to deprive any employee of employment opportunities, or which would otherwise tend to adversely affect his or her status as an employee;

(4) To fail or refuse to refer for employment any individual in such a manner that would deprive an individual of employment opportunities, that would limit an individual's employment opportunities or that would otherwise adversely affect an individual's status as a prospective employee or as an applicant for employment;

(5) To discriminate against an individual in admission to, or employment in, any program established to provide apprenticeship or other job training, including on-the-job training programs;

(6) To print or publish, or cause to be printed or published, any discriminatory notice or advertisement relating to employment. This subsection shall not be construed so as to expose the person who prints or publishes the notice or advertisement, such as a newspaper, to liability;

(7) To discriminate in referring an individual for employment whether the referral is by an employment agency, labor organization or any other person.

119.04 Prohibited Acts of Discrimination - Housing and Real Estate Transactions

(A) With regard to housing and real estate transactions, which include both sales and leases, it shall be unlawful to engage in any of the following acts wholly or partially for a discriminatory reason:

(1) To discriminate by impeding, delaying, discouraging or otherwise limiting or restricting any transaction in real estate;

(2) To discriminate by imposing different terms on a real estate transaction;

(3) To represent falsely that an interest in real estate is not available for transaction;

(4) To include in the terms or conditions of a real estate transaction any discriminatory clause, condition or restriction;

(5) To discriminate in performing, or refusing to perform, any act necessary to determine an individual's financial ability to engage in a real estate transaction;

(6) For a property manager to discriminate by refusing to provide equal treatment of, or services to, occupants of any real estate which he or she manages;

(7) To make, print or publish, or cause to be made, printed or published, any discriminatory notice, statement or advertisement with respect to a real estate transaction or proposed real estate transaction, or financing relating thereto. This subsection shall not be construed to prohibit advertising directed to physically disabled persons or persons over the age of fifty- five (55) for the purpose of calling to their attention the existence or absence of housing accommodations or services for the physically disabled or elderly;

(8) To discriminate in any financial transaction involving real estate on account of the location of the real estate, be it residential or non-residential ("red-lining");

(9) For a real estate operator, a real estate broker, a real estate salesperson, a financial institution, an employee of any of these or any other person, for the purposes of inducing a

real estate transaction from which such person may benefit financially, to represent that a change has occurred or will or may occur in the composition with respect to the race, ethnicity, national origin, age, gender, gender identity, gender expression, familial status, marital status, socioeconomic background, religion, sexual orientation, physical characteristic, disability or veteran status of the owners or occupants in the block, neighborhood or area in which the real property is located or to represent that this change will or may result in the lowering of property values, an increase in criminal or antisocial behavior or a decline in the quality of schools in the block, neighborhood or area in which the real property is located ("block-busting");

(10) Notwithstanding the provisions of subsections (a) through (h), it shall not be an unlawful discriminatory practice for an owner to limit occupancy on the basis of a person's low-income, age over fifty-five (55) years or disability status in accordance with federal or state law;

(11) Notwithstanding the provisions of subsections (a) through (h), it shall not be an unlawful discriminatory practice for an owner, lessor or renter to refuse to rent, lease or sublease a portion of a single family dwelling unit to a person as a tenant, roomer or boarder where it is anticipated that the owner, lessor or renter will be occupying any portion of the single-family dwelling or to refuse to rent, lease or sublease where it is anticipated that the owner, lessor or renter will be sharing either a kitchen or a bathroom with the tenant, roomer or boarder.

(12) Notwithstanding any other provision of this chapter, it is not an unlawful discriminatory practice to apply or enforce the definition of "family" for zoning purposes pursuant to § 151.01 of the Unified Development Code.

119.05 Prohibited Acts of Discrimination - Business Establishments or Public Accommodations

(A) It shall be unlawful for a business establishment or place of public accommodation to engage in any of the following acts wholly or partially for a discriminatory reason:

(1) To deny, directly or indirectly, any person the full enjoyment of the goods, services, facilities, privileges, advantages and accommodations of any business establishment or place of public accommodation, unless required by state or federal law;

(2) To print, publish, circulate, post or mail, directly or indirectly, a statement, advertisement or sign which indicates that the full and equal enjoyment of the goods, services, facilities, privileges, advantages and accommodations of a business establishment or place of public accommodation will be unlawfully refused, withheld from or denied an individual, or which indicates that an individual's patronage of, or presence at, the business establishment or place of public accommodation is objectionable, unwelcome, unacceptable or undesirable, unless the denial of the goods or services is required by state or federal law.

119.06 City Services, Facilities, Transactions and Contracts

(A) The City of Fayetteville shall be bound by the provisions of this chapter to the same extent as private individuals and businesses.

(B) All contractors doing business with the City of Fayetteville shall abide by this ordinance.

119.07 General Exceptions

(A) Any practice which has a discriminatory effect and which would otherwise be prohibited by this chapter shall not be deemed unlawful if it can be established that the practice is not intentionally devised to contravene the prohibitions of this chapter and there exists no less discriminatory means of satisfying a business purpose.

(B) This chapter shall not apply to any federal, state or county government office or official, or any public educational institution within the City.

(C) Unless otherwise prohibited by law, nothing contained in this chapter shall be construed to prohibit promotional activities such as senior citizen discounts and other similar practices designed primarily to encourage participation by a protected group.

(D) It shall not be an unlawful discriminatory practice for an employer to observe the conditions of a bona fide seniority system or a bona fide employee benefit system such as a retirement, pension or insurance plan which is not a subterfuge or pretext to evade the purposes of this chapter.

(E) It shall not be an unlawful discriminatory practice

for any person to carry out an affirmative action plan as required by state or federal law, or by court order.

(F) Nothing contained in this chapter shall be deemed to prohibit selection or rejection based solely upon a bona fide occupational qualification or a bona fide physical requirement. Nothing contained in this chapter shall be deemed to prohibit a religious or denominational institution from selecting or rejecting applicants and employees for non-secular positions on the basis of the applicant's or employee's conformance with the institution's religious or denominational principles. If a party asserts that an otherwise unlawful practice is justified as a permissible bona fide occupational qualification or a permissible bona fide physical requirement, that party shall have the burden of proving:

(1) That the discrimination is in fact a necessary result of such a bona fide condition; and

(2) That there exists no less discriminatory means of satisfying the bona fide requirement.

(G) If a party asserts that an otherwise unlawful practice is justified as a permissible bona fide religious or denominational preference, that party shall have the burden of proving that the discrimination is in fact a necessary result of such a bona fide condition.

(H) Any age restrictions required by state or federal law or regulations, including for the sale or delivery of alcoholic beverages, are not improper age discrimination under this chapter.

119.08 Posting of Notices

(A) Every employer or entity subject to this chapter shall post and keep posted in a conspicuous location where business or activity is customarily conducted or negotiated, a notice, the language and form of which has been prepared by the City of Fayetteville, setting forth excerpts from or summaries of the pertinent provisions of this chapter and information pertinent to the enforcement of rights hereunder. The notice shall be in both English and Spanish. If over ten percent of an employer's employees speak, as their native language, a language other than English or Spanish, notices at that employer's place of business shall be posted in that language. At the request of the employer or entity, notices required by this section shall be provided by the City. Notices shall be posted within ten days after receipt from the City.

119.09 Retaliation Prohibited

(A) It is an unlawful discriminatory practice to coerce, threaten, retaliate against, interfere with or discriminate against a person because that person has opposed any practice made unlawful by this chapter, has made a non-frivolous charge or complaint, or has testified truthfully, assisted or participated in an investigation, proceeding or hearing pursuant to this chapter.

(B) It is an unlawful discriminatory practice to require, request or suggest that a person or entity retaliate against, interfere with, intimidate or discriminate against a person because that person has opposed any practice made unlawful by this chapter, has made a non-frivolous charge or has testified truthfully, assisted or participated in an investigation, proceeding or hearing authorized under this chapter.

(C) It is an unlawful discriminatory practice to cause or coerce, or attempt to cause or coerce, directly or indirectly, any person in order to prevent that person from complying with the provisions of this chapter.

119.10 Preservation of Business Records

(A) Where a complaint of discrimination has been filed against a person under this ordinance, such person shall preserve all records relevant to the complaint until a final disposition of the complaint.

119.11 Administration and Enforcement

(A) The Mayor shall designate the Civil Rights Administrator, who shall administer this chapter and be responsible for receiving, investigating and conciliating complaints filed under this chapter. To be considered and administered by the Civil Rights Administrator, complaints must be received in the Civil Rights Administrator's office no more than six months after the alleged discriminatory action or, in the case of ongoing alleged discriminatory actions, no more than six months after the most recent incident of alleged discrimination. The Civil Rights Administrator shall prepare an easy to use complaint form and make the form easily accessible to the public.

(B) The Civil Rights Administrator should first attempt to eliminate the unlawful practice or practices through conciliation or mediation. In conciliating a complaint, the administrator should try to achieve a just resolution and obtain assurances that the respondent will satisfactorily remedy any violation of the complainant's rights and take action to ensure the elimination of both present and future unlawful practices in compliance with this

chapter. If the Civil Rights Administrator determines that the complainant is not acting in good faith, the conciliation or mediation may be terminated and the complaint may be immediately dismissed. If the respondent is not participating in good faith, the complaint may be immediately referred to the City Prosecutor's office.

(C) After any attempted conciliation or mediation, the Civil Rights Administrator will refer any unresolved complaint and complainant as needed to the City Prosecutor's Office for appropriate further action, including prosecution.

(D) The filing of a complaint under this chapter does not preclude any other state or federal remedies that may be available to a complainant.

Nominating Committee Report

Wednesday, June 11, 2014
Members Present – Chair Justin Tennant, Adella Gray and Mark Kinion
Members Absent – Rhonda Adams

The Mayor recommends the following candidate for appointment:

HISTORIC DISTRICT COMMISSION
Laura Chioldi – One Term ending 06/30/17
Joshua Youngblood – One Term ending 06/30/17

The Nominating Committee recommends the following candidates for appointment:

ANIMAL SERVICES ADVISORY BOARD
Lea Criss – One Citizen-at-Large term ending 06/30/17
Michael Compton – One Citizen-at-Large term ending 06/30/17

CITY BOARD OF HEALTH
No applications were received – One Unexpired Physician term ending 12/31/16

ENVIRONMENTAL ACTION COMMITTEE
Kelly Magoulick – One Science Discipline term ending 06/30/17
Richard Russell – One Community Citizen-at-Large Term Ending 06/30/17

FAYETTEVILLE ARTS COUNCIL
Dianne Wood Williams – One Working Artist term ending 06/30/17
Beth Woessner – One Arts and Cultural/Citizen-at-Large term ending 06/30/17
Justin Hunter – One Arts and Cultural/Citizen-at-Large term ending 06/30/17

WALTON ARTS CENTER COUNCIL
Hershey Garner – One term ending 06/30/17
Sarah Lewis – One term ending 06/30/17

WALTON ARTS CENTER FOUNDATION
Craig Shy – One Term ending 06/30/17

Agenda Session 7-8-14

Alderman Adella Gray
Ward 1 Position 1

Alderman Sarah Marsh
Ward 1 Position 2

Alderman Mark Kinion
Ward 2 Position 1

Alderman Matthew Petty
Ward 2 Position 2

Alderman Justin Tennant
Ward 3 Position 1

Alderman Martin W. Schoppmeyer, Jr.
Ward 3 Position 2

Alderman Rhonda Adams
Ward 4 Position 1

Alderman Alan T. Long
Ward 4 Position 2

Mayor Lioneld Jordan
City Attorney Kit Williams
City Clerk Sondra E. Smith

Tentative Agenda
City of Fayetteville Arkansas
City Council Meeting
July 15, 2014

A meeting of the Fayetteville City Council will be held on July 15, 2014 at 5:30 PM in Room 219 of the City Administration Building located at 113 West Mountain Street, Fayetteville, Arkansas.

Call to Order

Roll Call

Pledge of Allegiance

Mayor's Announcements, Proclamations and Recognitions:

City Council Meeting Presentations, Reports and Discussion Items:

1. 188th Arkansas Air National Guard Unit Fort Smith Presentation
2. International Institute of Municipal Clerks Certified Municipal Clerk Presentation and Arkansas City Clerks, Recorders, and Treasurers Association Certified Arkansas Municipal Clerk Presentation
3. Adrian White Municipal Leadership Award Presentation
4. 2013 Audit Report-Paul Becker Finance and Internal Services Director

Agenda Additions:

A. Consent:

1. Approval of the July 01, 2014 City Council meeting minutes.

2. **Bid #14-28 Scruggs Equipment Co.:** A resolution to award Bid #14-28 to Scruggs Equipment Co. of Memphis, Tennessee and to authorize the purchase of an RS Technical Services Trak-Star Van with pipeline television inspection system in the amount of $139,685.00 for use by the Water and Sewer Operations Division.

3. **Bid #14-35 Industrial Precast, Inc.:** A resolution to award Bid #14-35 and authorize the purchase of retaining wall blocks from Industrial Precast, Inc. in variable amounts as needed, and to authorize the use of other bidders based on price and availability as needed through the end of calendar year 2014.

4. **Bid #14-37 Carter Waters:** A resolution to award Bid #14-37 and authorize the purchase of cold asphalt concrete from Carter Waters for a unit price of $116.82 per ton, as needed, and to authorize the use of other bidders based on price and availability as needed through the end of calendar year 2014.

5. **Bid #14-32 Future Link of Illinois, Inc.:** A resolution to award Bid #14-32 and authorize the purchase of thirty-five (35) Mobile Computer Systems from Future Link of Illinois, Inc. in the amount of $150,500.00 for use in Fayetteville Police patrol vehicles.

6. **Hazmat Services Revenue:** A resolution to approve a budget adjustment recognizing hazmat services revenue received by the Fire Department since February 2014.

7. **Pierce Manufacturing, Inc.:** A resolution to approve a bid from Pierce Manufacturing, Inc. pursuant to the Houston-Galveston Area Council contract #800-926-0234 for a pierce 75 foot Heavy Duty Aluminum Ladder Fire Truck in the amount of $807,259.00 plus a contingency of $16,146.00.

8. **Plante and Moran, PLLC:** A resolution to approve an extension to the contract with Plante and Moran, PLLC for information technology services through the end of 2014 in the amount of $106,470.00, and to approve a budget adjustment.

9. **Public Access Television Fee Revenue:** A resolution to approve a budget adjustment in the amount of $4,000.00 recognizing public access television fee revenue to be used for promotional activities.

NB #1

10. **Walton Family Foundation Grant Acceptance – Town Branch Trail:** A resolution to express the City Council's thanks and gratitude to the Walton Family Foundation for its generous $815,000.00 matching grant for the completion of Town Branch and Tsa-La-Gi Trails, to approve the grant agreement and to approve a budget adjustment to recognize this $815,000.00 grant.

NB#1 11. **Walton Family Foundation Grant Acceptance – Cato Springs Trail Design**: A resolution to express the City Council's thanks and gratitude to the Walton Family Foundation for its generous $150,000.00 matching grant for the design and engineering of the Cato Springs Trail, to approve the grant agreement and to approve a budget adjustment to recognize this $150,000.00 grant.

12. **Yvonne Richardson Community Center:** A resolution to approve a budget adjustment in the total amount of $28,202.00 representing donation revenue to the Yvonne Richardson Community Center for the first half of 2014.

13. **Urban Sustainability Directors Network:** A resolution to authorize acceptance of a grant from the Urban Sustainability Directors Network in the amount of $2,465.00, and to approve a budget adjustment.

14. **Evans Construction and Remodeling, LLC:** A resolution to authorize a contract with Evans Construction and Remodeling, LLC in the amount of $38,190.00 for Community Development Block Grant Rehabilitation of an eligible residence located at 1211 N. Starr Drive.

15. **Sourcegas Arkansas, Inc.:** A resolution to approve a utility work agreement with Sourcegas Arkansas, Inc. in the amount of $39,804.79 for the relocation of gas mains and facilities necessary for the Spring Street Parking Deck Project, and to approve a project contingency of $8,000.00.

16. **Harvey Dowell Road Sewer Service Extension:** A resolution to approve the extension of the City's sewerage system beyond the city limits to a single residence located at 55 S. Harvey Dowell Road.

B. Unfinished Business: None

C. New Business:

1. **RZN 14-4703 (Northeast Corner of Wedington and Rupple Road/Wedington Zone 2):** An ordinance rezoning that property described in rezoning petition RZN 14-4703, for approximately 6.88 acres, located at the northeast corner of Wedington and Rupple Road from C-1, Neighborhood Commercial, C-2, Thoroughfare Commercial, and I-PZD, Industrial Planned Zoning District Westside Mini-Storage to CS, Community Services.

2. **RZN 14-4729 (Cato Springs Rd./Chambers Bank):** An ordinance rezoning that property described in rezoning petition RZN 14-4729, for approximately 253.23 acres, located along Cato Springs Road adjacent to the City's Regional Park property from R-PZD, Residential Planned Zoning District Southpass 08-2898, to UT, Urban Thoroughfare, CS, Community Services, and NC, Neighborhood Conservation.

3. **RZN 14-4731 (Regional Park/Mt. Kessler Reserve)**: An ordinance rezoning that property described in rezoning petition RZN 14-4731, for approximately 630 acres, located at Mt. Kessler Regional Park from R-PZD, Residential Planned Zoning District Southpass 08-2898, to P-1, Institutional.

4. **VAC 14-4753 (1560 S. Happy Hollow Rd/Recycling and Trash Collection Facility:** An ordinance approving VAC 14-4753 submitted by city staff for property located at 1560 S. Happy Hollow Road to vacate existing street right-of-way for Happy Hollow Road.

5. **Baldwin & Shell Construction Company:** A resolution to authorize an amendment to the contract with Baldwin & Shell Construction Company for demolition and mass excavation services for the Spring Street Parking Deck.

6. **Repeal §178.05 Food Truck Limited Time Permits:** An ordinance to repeal §178.05 Food Truck Limited Time Permits and enact a replacement §178.05 Food Truck and Food Trailer Limited Time Permits.

7. **Enact Chapter 119 Civil Rights Administration:** An ordinance to amend the Fayetteville Code by enacting Chapter 119 Civil Rights Administration to protect the Civil Rights of Fayetteville citizens and visitors and to create the position of Civil Rights Administrator for the City of Fayetteville.

City Council Agenda Session Presentations:

1. 2013 Audit Management Report-Judy Jacobs Audit Committee Chair

D. City Council Tour:

Add: Consent — Federal Aviation Admin. Grant Terminal Apron Rehab. Project

E. Announcements:

Adjournment:

NOTICE TO MEMBERS OF THE AUDIENCE

All interested persons may address the City Council on agenda items of New and Old Business. Please wait for the Mayor to request public comment and then come to the podium, give your name, address, and comments about the agenda item. Please address only the Mayor. Questions are usually answered by the Mayor, Aldermen or Staff after the public comment period is over. Please keep your comments brief and respectful. Each person is only allowed one turn at the microphone for discussion of an agenda item.

All cell phones must be silenced and may not be used within the City Council Chambers.

Below is a portion of the **Rules of Order and Procedure of the Fayetteville City Council** pertaining to City Council meetings:

> **Agenda additions.** A new item which is requested to be added to the agenda at a City Council meeting should only be considered if it requires immediate City Council consideration and if the normal agenda setting process is not practical. The City Council may only place such new item on the City Council meeting's agenda by suspending the rules by two-thirds vote. Such agenda addition shall be heard prior to the Consent Agenda.
>
> **Consent Agenda.** Consent Agenda items shall be read by the Mayor and voted upon as a group without discussion by the City Council. If an Alderman wishes to comment upon or discuss a Consent Agenda item that item shall be removed and considered immediately after the Consent Agenda has been voted upon.
>
> **Old business and new business.**

Presentations by staff and applicants. Agenda items shall be introduced by the Mayor and, if an ordinance, read by the City Attorney. City staff shall then present a report. An agenda applicant (city contractor, rezoning or development applicant, etc.) may present its proposal only during this presentation period, but may be recalled by an alderman later to answer questions. Staff and applicants may use electronic visual aids in a City Council meeting as part of their presentation.

Public comments. Public comment shall be allowed for all members of the audience on all items of old and new business and subjects of public hearings. No electronic visual aid presentations shall be allowed, but the public may submit photos, petitions, etc. to be distributed to the City Council. If a member of the public wishes for the City Clerk to distribute materials to the City Council before its meeting, such materials should be supplied to the City Clerk office no later than 9:00 a.m. on the day of the City Council meeting. Any member of the public shall first state his or her name and address, followed by a concise statement of the person's position on the question under discussion. Repetitive comments should be avoided; this applies to comments made previously either to the City Council or to the Planning Commission when those Planning Commission minutes have been provided to the Aldermen. All remarks shall be addressed to the Mayor or the City Council as a whole and not to any particular member of the City Council. No person other than the Aldermen and the person having the floor shall be permitted to enter into any discussions without permission of the Mayor. No questions shall be directed to an Alderman or city staff member except through the Mayor.

Courtesy and respect. All members of the public, all city staff and elected officials shall accord the utmost courtesy and respect to each other at all times. All shall refrain from rude or derogatory remarks, reflections as to integrity, abusive comments and statements about motives or personalities. Any member of the public who violates these standards shall be ruled out of order by the Mayor, must immediately cease speaking and shall leave the podium.

Interpreters or TDD for hearing impaired are available for all City Council meetings, a 72 hour advance notice is required. For further information or to request an interpreter, please call (479) 575-8330.

A copy of the complete City Council agenda is available at www.fayetteville-ar.gov or in the office of the City Clerk, 113 W. Mountain, Fayetteville, Arkansas.

Pre Agenda Meeting

Alderman Adela Gray
Ward 1 Position 1

Alderman Sarah Marsh
Ward 1 Position 2

Alderman Mark Kinion
Ward 2 Position 1

Alderman Matthew Petty
Ward 2 Position 2

Alderman Justin Tennant
Ward 3 Position 1

Alderman Martin W. Schoppmeyer, Jr.
Ward 3 Position 2

Alderman Rhonda Adams
Ward 4 Position 1

Alderman Alan T. Long
Ward 4 Position 2

Mayor Lioneld Jordan
City Attorney Kit Williams
City Clerk Sondra E. Smith

Tentative Agenda
City of Fayetteville Arkansas
City Council Meeting
July 15, 2014

A meeting of the Fayetteville City Council will be held on July 15, 2014 at 5:30 PM in Room 219 of the City Administration Building located at 113 West Mountain Street, Fayetteville, Arkansas.

Call to Order

Roll Call

Pledge of Allegiance

Mayor's Announcements, Proclamations and Recognitions:

City Council Meeting Presentations, Reports and Discussion Items:

1. 188th Arkansas Air National Guard Unit Fort Smith Presentation
   White Award Presentation
2. 2013 Audit Report-Paul Becker Finance and Internal Services Director

EMC Certs Municipal Clk. Award
Adrian White Municipal Leadership Award

Agenda Additions:

A. Consent:

1. Approval of the July 01, 2014 City Council meeting minutes.

2. **Bid #14-28 Scruggs Equipment Co.:** A resolution to award Bid #14-28 to Scruggs Equipment Co. of Memphis, Tennessee and to authorize the purchase of an RS Technical Services Trak-Star Van with pipeline television inspection system in the amount of $139,685.00 for use by the Water and Sewer Operations Division.

3. **Bid #14-35 Industrial Precast, Inc.:** A resolution to award Bid #14-35 and authorize the purchase of retaining wall blocks from Industrial Precast, Inc. in variable amounts as needed, and to authorize the use of other bidders based on price and availability as needed through the end of calendar year 2014.

4. **Bid #14-37 Carter Waters:** A resolution to award Bid #14-37 and authorize the purchase of cold asphalt concrete from Carter Waters for a unit price of $116.82 per ton, as needed, and to authorize the use of other bidders based on price and availability as needed through the end of calendar year 2014.

5. **Bid #14-32 Future Link of Illinois, Inc.:** A resolution to award Bid #14-32 and authorize the purchase of thirty-five (35) mobile computer systems from Future Link of Illinois, Inc. in the amount of $150,500.00 for use in Fayetteville Police patrol vehicles.

6. **Hazmat Services Revenue:** A resolution to approve a budget adjustment recognizing hazmat services revenue received by the Fire Department since February 2014.

7. **Pierce Manufacturing, Inc.:** A resolution to approve a bid from Pierce Manufacturing, Inc. pursuant to the Houston-Galveston area council contract #800-926-0234 for a pierce 75 foot heavy duty aluminum ladder fire truck in the amount of $807,259.00 plus a contingency of $16,146.00.

8. **Plante and Moran, PLLC:** A resolution to approve an extension of the contract with Plante and Moran, PLLC for information technology services through the end of 2014 in the amount of $106,470.00, and to approve a budget adjustment.

9. **Public Access Television Fee Revenue:** A resolution to approve a budget adjustment in the amount of $4,000.00 recognizing Public Access Television fee revenue to be used for promotional activities.

10. **Walton Family Foundation Grant Acceptance – Town Branch Trail:** A resolution to express the City Council's thanks and gratitude to the Walton Family Foundation for its generous $815,000.00 matching grant for the completion of Town Branch and Tsa-La-Gi Trails, to approve the grant agreement and to approve a budget adjustment to recognize this $815,000.00 grant.

11. **Walton Family Foundation Grant Acceptance – Cato Springs Trail Design**: A resolution to express the City Council's thanks and gratitude to the Walton Family Foundation for its generous $150,000.00 matching grant for the design and engineering of the Cato Springs Trail, to approve the grant agreement and to approve a budget adjustment to recognize this $150,000.00 grant.

12. **Yvonne Richardson Community Center:** A resolution to approve a budget adjustment in the total amount of $28,202.00 representing donation revenue to the Yvonne Richardson Community Center for the first half of 2014.

13. **Urban Sustainability Directors Network:** A resolution to authorize acceptance of a grant from the Urban Sustainability Directors Network in the amount of $2,465.00, and to approve a budget adjustment.

14. **Evans Construction and Remodeling, LLC**: A resolution to authorize a contract with Evans Construction and Remodeling, LLC in the amount of $38,190.00 for Community Development Block Grant Rehabilitation of an eligible residence located at 1211 N. Starr Drive.

15. **Sourcegas Arkansas, Inc.:** A resolution to approve a utility work agreement with Sourcegas Arkansas, Inc. in the amount of $39,804.79 for the relocation of gas mains and facilities necessary for the Spring Street Parking Deck Project, and to approve a project contingency of $8,000.00.

16. **Baldwin & Shell Construction Company:** A resolution to authorize an amendment to the contract with Baldwin & Shell Construction Company for demolition and mass excavation services for the Spring Street Parking Deck.

17. **Harvey Dowell Road Sewer Service Extension:** A resolution to approve the extension of the City's sewerage system beyond the city limits to a single residence located at 55 S. Harvey Dowell Road.

B. Unfinished Business: None

C. New Business:

1. **RZN 14-4703 (Northeast Corner of Wedington and Rupple Road/Wedington Zone 2):** An ordinance rezoning that property described in rezoning petition RZN 14-4703, for approximately 6.88 acres, located at the northeast corner of Wedington and Rupple Road from C-1, Neighborhood Commercial, C-2, Thoroughfare Commercial, and I-PZD, Industrial Planned Zoning District Westside Mini-Storage to CS, Community Services.

2. **RZN 14-4729 (Cato Springs Rd./Chambers Bank):** An ordinance rezoning that property described in rezoning petition RZN 14-4729, for approximately 253.23 acres, located along Cato Springs Road adjacent to the City's Regional Park property from R-PZD, Residential Planned Zoning District Southpass 08-2898, to UT, Urban Thoroughfare, CS, Community Services, and NC, Neighborhood Conservation.

3. **RZN 14-4731 (Regional Park/Mt. Kessler Reserve)**: An ordinance rezoning that property described in rezoning petition RZN 14-4731, for approximately 630 acres, located at Mt. Kessler Regional Park from R-PZD, Residential Planned Zoning District Southpass 08-2898, to P-1, Institutional.

4. **VAC 14-4753 (1560 S. Happy Hollow Rd/Recycling and Trash Collection Facility:** An ordinance approving VAC 14-4753 submitted by city staff for property located at 1560 S. Happy Hollow Road to vacate existing street right-of-way for Happy Hollow Road.

6. **Repeal §178.05 Food Truck Limited Time Permits:** An ordinance to repeal §178.05 Food Truck Limited Time Permits and enact a replacement §178.05 Food Truck and Food Trailer Limited Time Permits.

7. Enact Chapter 119 Civil Rights Administration

City Council Agenda Session Presentations:

1. 2013 Audit Management Report-Judy Jacobs Audit Committee Chair

D. City Council Tour:

E. Announcements:

Adjournment:

NOTICE TO MEMBERS OF THE AUDIENCE

All interested persons may address the City Council on agenda items of New and Old Business. Please wait for the Mayor to request public comment and then come to the podium, give your name, address, and comments about the agenda item. Please address only the Mayor. Questions are usually answered by the Mayor, Aldermen or Staff after the public comment period is over. Please keep your comments brief and respectful. Each person is only allowed one turn at the microphone for discussion of an agenda item.

All cell phones must be silenced and may not be used within the City Council Chambers.

Below is a portion of the **Rules of Order and Procedure of the Fayetteville City Council** pertaining to City Council meetings:

> **Agenda additions.** A new item which is requested to be added to the agenda at a City Council meeting should only be considered if it requires immediate City Council consideration and if the normal agenda setting process is not practical. The City Council may only place such new item on the City Council meeting's agenda by suspending the rules by two-thirds vote. Such agenda addition shall be heard prior to the Consent Agenda.
>
> **Consent Agenda.** Consent Agenda items shall be read by the Mayor and voted upon as a group without discussion by the City Council. If an Alderman wishes to comment upon or discuss a Consent Agenda item that item shall be removed and considered immediately after the Consent Agenda has been voted upon.
>
> **Old business and new business.**
>
> > **Presentations by staff and applicants.** Agenda items shall be introduced by the Mayor and, if an ordinance, read by the City Attorney. City staff shall then present a report. An agenda applicant (city contractor, rezoning or development applicant, etc.) may present its proposal only during this presentation period, but may be recalled by an alderman later to answer questions. Staff and applicants may use electronic visual aids in a City Council meeting as part of their presentation.
> >
> > **Public comments.** Public comment shall be allowed for all members of the audience on all items of old and new business and subjects of public hearings. No electronic visual aid presentations shall be allowed, but the public may submit photos, petitions, etc. to be distributed to the City Council. If a member of the public wishes for the City Clerk to distribute materials to the City Council before its meeting, such materials should be supplied to the City Clerk office no later than 9:00 a.m. on the day of the City Council meeting. Any member of the public shall first state his or her name and address, followed by a concise statement of the person's position on the question under discussion. Repetitive comments should be avoided; this applies to comments made previously either to the City Council or to the Planning Commission when those Planning Commission minutes have been provided to the Aldermen. All remarks shall be addressed to the Mayor or the City Council as a whole and not to any particular member of the City Council. No person other than the Aldermen and the person having the floor shall be permitted to enter into any discussions without permission of the Mayor. No questions shall be directed to an Alderman or city staff member except through the Mayor.

Courtesy and respect. All members of the public, all city staff and elected officials shall accord the utmost courtesy and respect to each other at all times. All shall refrain from rude or derogatory remarks, reflections as to integrity, abusive comments and statements about motives or personalities. Any member of the public who violates these standards shall be ruled out of order by the Mayor, must immediately cease speaking and shall leave the podium.

Interpreters or TDD for hearing impaired are available for all City Council meetings, a 72 hour advance notice is required. For further information or to request an interpreter, please call (479) 575-8330.

A copy of the complete City Council agenda is available at www.fayetteville-ar.gov or in the office of the City Clerk, 113 W. Mountain, Fayetteville, Arkansas.