City of Fayetteville, Arkansas

113 West Mountain Street
Fayetteville, AR 72701
(479) 575-8323

City Council Final Agenda

Tuesday, June 16, 2026

5:30 PM

City Hall Room 219

City Council Members

Council Member Robert B. Stafford Ward 1
Council Member Dr. D'Andre Jones Ward 1
Council Member Sarah Moore Ward 2
Council Member Mike Wiederkehr Ward 2
Council Member Scott Berna Ward 3
Council Member Sarah Bunch Ward 3
Council Member Teresa Turk Ward 4
Council Member Min. Monique Jones Ward 4

Mayor Molly Rawn
City Attorney Kit Williams
City Clerk Treasurer Kara Paxton

Meeting Information:

1. Webinar ID: 894 6816 4392

Public Registration Link: https://fayetteville-ar.zoom.us/webinar/register/WN_V8V3dP2HSYSRMLrulOyosg

Public Comment:

1. You may submit a public comment regarding an upcoming City Council agenda item using the below options:

1) You can email your comment to AgendaItemComment@fayetteville-ar.gov
2) You can attend the meeting in person and speak during the public comment period on the item.
3) You can attend the meeting via Zoom and raise your virtual hand during the public comment period on the item.

Call to Order

Roll Call

Pledge of Allegiance

Mayor' s Announcements, Proclamations and Recognitions

City Council Meeting Presentations, Reports and Discussion Items

1. Nominating Committee Report

Proposed Agenda Additions

A. Consent

A.1. Approval of the June 2, 2026 City Council Meeting Minutes

A.2. Purchase of Petroleum-Based Oils and Lubricants:
A resolution to approve the purchase of petroleum based products and lubricants on an as needed basis from various vendors and in various quantities in excess of $40,000.00 through December 31, 2026, within the approved budget. (2026-2000)

A.3. Purchase of a Walk-behind Trench Roller with Attachments for the Water & Sewer Department:
A resolution to approve the purchase of a trench roller with attachments from G W Van Keppel Company in the total amount of $45,000.08, pursuant to a sourcewell cooperative purchasing contract, plus any applicable surcharges,

freight charges, or delivery fees up to 10% of the original purchase price, and to approve a budget amendment. (2026-1790)

A.4. Excavator Replacement through JA Riggs Tractor Co.:
A resolution to approve the purchase of one excavator and attachments in the total amount of $104,726.81 from JA Riggs Tractor Co., pursuant to a Sourcewell Cooperative Purchasing Contract, plus any applicable surcharges, freight charges, and delivery fees up to 10% of the original purchase price. (2026-1789)

A.5. Water & Sewer Department Work Truck Replacement:
A resolution to approve the purchase of one Ford F150 Hybrid from Olathe Ford Lincoln in the amount of $53,593.06, pursuant to a sourcewell cooperative purchasing contract, plus any applicable surcharges, freight charges, and delivery fees up to 10% of the original purchase price. (2026-1788)

A.6. Purchase of One Set of Mobile Traffic Signals for the Water Sewer Department:
A resolution to approve the purchase of portable traffic signals from OMJC Signal Inc. in the total amount of $65,696.47, pursuant to a Buyboard Cooperative Purchasing Contract, plus any applicable surcharges, freight charges, title, licensing or delivery fees up to 10% of the original purchase price, and to approve a budget amendment. (2026-1787)

A.7. Southern Brothers Construction, LLC:
A resolution to award Bid 26-30 and authorize a contract with Southern Brothers Construction, LLC in the amount of $1,209,824.00 for construction of an electrical switchgear facility at the Paul R. Noland Water Resource Recovery Facility, and to approve a project contingency in the amount of $120,982.40. (2026-1795)

A.8. Hawkins-Weir Engineers, Inc. (Amendment No. 1):
A resolution to approve Amendment No. 1 to the Professional Engineering Services agreement with Hawkins-Weir Engineers, Inc. in an amount not to exceed $195,220.00 for additional services associated with the Noland Water Resource Recovery Facility Primary Switchgear Improvements Project. (2026-1796)

A.9. Kessler Phase 3 Improvements - Design Contract:
A resolution to award RFQ #26-01 Selection #6 and authorize a contract with Garver, LLC in an amount not to exceed $373,000.00 to provide design and construction administration services for Kessler Mountain Regional Park Phase 3 Improvements, and to approve a project contingency in the amount of $27,000.00. (2026-1681)

A.10. HWY 112/Garland Supplemental Agreement #2:

A resolution to approve the second supplement to the Agreement of Understanding with the Arkansas Department of Transportation for the Highway 112 Poplar Street to Drake Street project to accept federal-aid funding in the amount of $500,000.00 with a required city match of $125,000.00, and to approve a budget amendment. (2026-1867)

A.11. Millsap & College Intersection Improvements - Black Hills Utility Work Agreement:

A resolution to approve an agreement with Black Hills Energy Arkansas, Inc. in the amount of $302,040.00 for utility relocations associated with the Millsap Road and College Avenue Intersection Improvement project, to approve a project contingency in the amount of $17,960.00, and to approve a budget amendment in the amount of $320,000.00. (2026-1902)

A.12. On-call Drainage Design Services Contract through June 30, 2027:

A resolution to award RFQ #26-01 Selection #4 and authorize the purchase of on-call drainage design services from Burns & Mcdonnell Engineering Co, Inc., Hawkins-Weir Engineers, Inc. and Olsson Associates, Inc. as needed through June 30, 2027, within the approved budget. (2026-1873)

A.13. Contract Amendment with Olsson for Railroad Crossing Elimination Grant Application Preparation:

A resolution to approve Amendment No. 1 to the contract with Olsson, Inc. in the amount of $25,000.00 for grant application services for the Railroad Crossing Elimination Program. (2026-1962)

A.14. City Hall Elevator Modernization Project:

A resolution to amend Resolution 67-26 for the City Hall elevator contract with Otis Elevator to provide for the payment of sales taxes, and to increase the project contingency to $20,000.00. (2026-1969)

A.15. Drake Field - Terminal Modernization Plan:

A resolution to authorize staff to proceed with the Drake Field Airport Terminal Modernization project in the amount of $200,000.00, to approve the purchase of furniture in the amount of $157,035.74 from the Norman Company, Inc. pursuant to TIPS and Omnia Cooperative Purchasing contracts, and to approve a budget amendment. (2026-1810)

A.16. Purchase of Air Compressor and Fill Station Parts for Fire Station:

A resolution to approve the purchase of an air compressor and fill station parts from Siddons-Martin in the total amount of $61,036.64 pursuant to a Houston-Galveston Area Council Cooperative Purchasing Contract. (2026-1754)

A.17. FY 2025 Staffing for Adequate Fire and Emergency Response (SAFER) Grant Program - Approval to Apply:
A resolution to authorize an application for a Staffing for Adequate Fire and Emergency Response (SAFER) Grant in the amount of $1,848,461.00 to hire 12 full-time firefighters. (2026-1961)

A.18. Buddy Hayes Park Property Acquisition:
A resolution to approve a land sale agreement with Tommie Flowers Davis for the purchase of property adjacent to Buddy Hayes Park in the amount of $52,500.00, to approve a contingency in the amount of $10,000.00, and to approve a budget amendment. (2026-1959)

B. Public Hearing

B.1. Private Club Application for Oxbow:
An ordinance to approve the application of Motelier Fayetteville, LLC, d/b/a Oxbow for a permit to operate the Oxbow as a private club in the City of Fayetteville at 2980 North College Avenue. (2026-1945)

C. Unfinished Business

C.1. Conservation Ordinance for properties included in the Climate Pollution Reduction Grant:
An ordinance to provide for the conservation and protection of certain City-owned real property, to establish permitted and prohibited uses; and for other purposes. (2026-1105)

At the June 2, 2026 City Council meeting, this ordinance was left on the first reading.

D. New Business

D.1. VAC 2026-0006 East Cypress Lane:
An ordinance to approve VAC-26-06 for property located at 1660 East Cypress Lane in Ward 3 to vacate 15.60 square feet of general utility easement. (2026-1957)

D.2. Definition of Private Club:
An ordinance to align the city's definition of a private club with state law by amending § 111.02 Definitions within Chapter 111 Alcoholic Beverages. (2026-1946)

D.3. Additional Data Center Regulations:
An ordinance to make Data Centers a conditional use in the City of Fayetteville and provide for additional regulations on Data Centers by amending § 161.31 District I-2, General Industrial, § 164.27 Data Centers, § 51.001 Water

Shortages, and § 51.112 Water Service and Extension Policy of the Unified Development Code, and to declare an emergency. (2026-2001)

E. City Council Tour

F. Announcements

G. Adjournment

NOTICE TO MEMBERS OF THE AUDIENCE

All interested persons may appear and address the City Council on Unfinished Business, New Business, and Public Hearings at City Council meetings. If you wish to address the City Council on an agenda item, please wait for the Mayor or Chair to request public comment. When the Mayor or Chair recognizes you, please start your public comment by giving your name and address. Comments are to be addressed to the Mayor or Chair. The Mayor or Chair will direct your comments to the appropriate elected officials, staff, or others for response. Keep your comments respectful, brief, to the point, and relevant to the agenda item being considered. Each speaker from the public will be allowed one turn to speak for discussion of an agenda item.

Below is a portion of the Rules of Order and Procedure of the Fayetteville City Council pertaining to City Council meetings:

Agenda Additions: A new item which is requested to be added to the agenda at a City Council meeting should only be considered if it requires immediate City Council consideration and if the normal agenda setting process is not practical. The City Council may only place such new item on the City Council meeting's agenda by suspending the rules by two-thirds vote. Such agenda addition shall be heard prior to the Consent Agenda.

Consent Agenda: Consent Agenda items shall be read by the Mayor and voted upon as a group without discussion by the City Council. If a Council Member wishes to comment upon or discuss a Consent Agenda item that item shall be removed and considered immediately after the Consent Agenda has been voted upon.

Unfinished Business and New Business:

Overview Period: Agenda items at a City Council meeting shall be introduced by the Mayor and, if an ordinance, read by the City Attorney. City staff shall then present a report. An agenda applicant (city contractor, rezoning or development applicant, appellant from a final decision of the Planning Commission or City Staff, etc.) may present its proposal only during this presentation period but may be recalled by a Council Member later to answer questions. City staff, Council Members and applicants may use electronic visual aids in the City Council meeting as part of the presentation of the agenda item. City staff’s presentation and an Applicant’s presentation whether presented by one or more than one presenter shall each be limited to a maximum of ten (10) minutes unless the City Council by unanimous consent or majority vote allows additional time.

Public Comments: Public comment at a City Council meeting shall be allowed on all items of unfinished and new business and subjects of public hearings. Amendments may receive public comments only if approved by the City Council by unanimous consent or majority vote. Speakers

present in the City Council Chambers shall be recognized before speakers participating by electronic means. Speakers shall be limited to a maximum of three (3) minutes to discuss the agenda item or amendment being considered by the City Council. The City Council may allow a speaker additional time by unanimous consent or majority vote. As part of a person's public comments allowed above, the speaker may use electronic visual aids during their three (3) minutes presentation period concerning the agenda item being considered by the City Council.

Courtesy and Respect: All members of the public, all city staff and elected officials shall accord the utmost courtesy and respect to each other at all times. All shall refrain from comments that are harassing or amount to a personal attack against any identifiable individual including abusive comments and derogatory remarks about integrity or offer any other comments that are also not limited to the discussion of the specific agenda item being considered by the City Council. Any member of the public who violates these standards shall be ruled out of order by the Mayor, must immediately cease speaking and shall leave the podium.

Cell Phones and Pagers: Cell phones must be turned off or put in silent mode and not used within the City Council Chambers during City Council meetings. Pagers must be turned off or put in silent mode within the City Council Chambers during City Council meetings. These restrictions also apply during Agenda Sessions.

Smoking Prohibited: There will be no smoking allowed in the City Council Chambers during City Council meetings.

Interpreters or Telecommunications Devices for the Deaf (TDD), for hearing impaired are available for all City Council meetings, a 72-hour advance notice is required. For further information or to request an interpreter, please call 479-575-8330.

A copy of the complete City Council agenda is available on our website at www.fayetteville-ar.gov or in the Office of the City Clerk, 113 W. Mountain, Fayetteville, Arkansas (479) 575-8323.

Appointment Recommendations

June 16, 2026

The following candidates are recommended for appointment.

Animal Services Advisory Board

Dr. Jessie Hargis. Veterinarian Professional term ending June 30, 2028.
Aaron Eng. Member at Large term ending June 30, 2029.
Jan Hixson. Member at Large term ending June 30, 2029.

Environmental Action Committee

Ben Davis. Science Discipline term ending June 30, 2029.
Mahboobeh (Mary) Hemmati. Resident at Large term ending June 30, 2029.

Food Commission

Wannalitha Anderson. Resident Impacted by Food Insecurity term ending March 31, 2028.
Catherine Kabasia. Resident Impacted by Food Insecurity term ending March 31, 2027.
Ashley Utsey. Resident Impacted by Food Insecurity term ending March 31, 2027.

Historic District Commission

No recommendation.

Walton Arts Center Council

Mark Kinion. Resident at Large term ending June 30, 2029.
Joel Freund. Resident at Large term ending June 30, 2029.

CITY OF FAYETTEVILLE ARKANSAS

CITY COUNCIL MEMO
2026-2000

MEETING OF JUNE 16, 2026

TO: Mayor Rawn and City Council

THROUGH: Terry Gulley, Asst Public Works Director - Ops

FROM: Ross Jackson, Fleet Operations Superintendent

SUBJECT: **Purchase of Petroleum-Based Oils and Lubricants:**

RECOMMENDATION:
A RESOLUTION TO APPROVE THE PURCHASE OF PETROLEUM-BASED PRODUCTS AND LUBRICANTS ON AN AS NEEDED BASIS FROM VARIOUS VENDORS AND IN VARIOUS QUANTITIES IN EXCESS OF $40,000.00 THROUGH DECEMBER 31, 2026

BACKGROUND:
Historically, the city has solicited bids for oils and lubricants on a contract basis. Due to ongoing global volatility of the petroleum-based markets and varied pricing structures that distributors receive from their suppliers, the City has historically been unable to maintain an effective contract that is mutually beneficial to both parties.

DISCUSSION:
According to Arkansas code ACA 14-58-104, the continued purchase of automotive motor oils and petroleum-based products is authorized under A.C.A. § 14-58-104 (14), and are exempt from municipal competitive bidding requirements.

Staff recommends approval of the proposed procurement to support ongoing City operations.

BUDGET/STAFF IMPACT:
Oil and maintenance related fluids are funded through Fleet Operations' annual operating budget.

ATTACHMENTS: 3. Staff Review Form, 4. Resolution 172-21 Oils and Lubricants

113 West Mountain Street
Fayetteville, AR 72701
(479) 575-8323

File #: 2026-2000

A RESOLUTION TO APPROVE THE PURCHASE OF PETROLEUM BASED PRODUCTS AND LUBRICANTS ON AN AS NEEDED BASIS FROM VARIOUS VENDORS AND IN VARIOUS QUANTITIES IN EXCESS OF $40,000.00 THROUGH DECEMBER 31, 2026, WITHIN THE APPROVED BUDGET

WHEREAS, pursuant to Ark. Code. Ann. § 14-58-104(14), automotive motor oils and petroleum-based products are exempt from competitive bidding requirements.

NOW, THEREFORE, BE IT RESOLVED BY THE CITY COUNCIL OF THE CITY OF FAYETTEVILLE, ARKANSAS:

Section 1: That the City Council of the City of Fayetteville, Arkansas hereby authorizes the purchase of petroleum-based products and lubricants on an as needed basis from various vendors and in various quantities in excess of $40,000.00 through December 31, 2026, within the approved budget.

City of Fayetteville Staff Review Form

2026-2000

Item ID

7/7/2026

City Council Meeting Date - Agenda Item Only
N/A for Non-Agenda Item

Ross Jackson	6/2/2026	FLEET OPERATIONS (770)
Submitted By	**Submitted Date**	**Division / Department**

Action Recommendation:

A RESOLUTION TO APPROVE THE PURCHASE OF PETROLEUM-BASED PRODUCTS AND LUBRICANTS ON AN AS NEEDED BASIS FROM VARIOUS VENDORS AND IN VARIOUS QUANTITIES THROUGH DECEMBER 31ST OF 2026.

Budget Impact:

9700.770.1910-5214.00 9700.770.1910-5214.02	Shop
Account Number	Fund
NA	NA
Project Number	Project Title

Budgeted Item?	Yes	Total Amended Budget	$	1,362,500.00
		Expenses (Actual+Encum)	$	643,038.43
		Available Budget	$	719,461.57
Does item have a direct cost?	No	Item Cost	$	-
Is a Budget Adjustment attached?	No	Budget Adjustment	$	-
		Remaining Budget	$	719,461.57

V20221130

Purchase Order Number: _____ **Previous Ordinance or Resolution #** _____

Change Order Number: _____ **Approval Date:** _____

Original Contract Number: _____

Comments:

113 West Mountain Street
Fayetteville, AR 72701
(479) 575-8323

Resolution: 172-21

File Number: 2021-0427

PURCHASE OF PETROLEUM-BASED OILS AND LUBRICANTS:

A RESOLUTION TO APPROVE THE PURCHASE OF PETROLEUM-BASED OILS AND LUBRICANTS ON AN AS-NEEDED BASIS FROM VARIOUS VENDORS AND IN VARIOUS QUANTITIES THROUGH THE END OF 2025

WHEREAS, pursuant to Ark. Code Ann. § 14-58-104, the City may purchase motor fuels, oil, asphalt, asphalt oil, and natural gas without soliciting bids.

NOW, THEREFORE, BE IT RESOLVED BY THE CITY COUNCIL OF THE CITY OF FAYETTEVILLE, ARKANSAS:

Section 1: That the City Council of the City of Fayetteville, Arkansas hereby approves the purchase of petroleum-based oils and lubricants on an as-needed basis from various vendors and in various quantities through the end of 2025.

PASSED and APPROVED on 6/15/2021

Approved:

Lioneld Jordan, Mayor

Attest:

Kara Paxton, City Clerk Treasurer

CITY CLERK / TREASURER CITY OF FAYETTEVILLE ARKANSAS WASHINGTON COUNTY

City of Fayetteville, Arkansas

113 West Mountain Street
Fayetteville, AR 72701
(479) 575-8323

Text File

File Number: 2021-0427

Agenda Date: 6/15/2021 **Version:** 1 **Status:** Passed

In Control: City Council Meeting **File Type:** Resolution

Agenda Number: A.2

PURCHASE OF PETROLEUM-BASED OILS AND LUBRICANTS:

A RESOLUTION TO APPROVE THE PURCHASE OF PETROLEUM-BASED OILS AND LUBRICANTS ON AN AS-NEEDED BASIS FROM VARIOUS VENDORS AND IN VARIOUS QUANTITIES THROUGH THE END OF 2025

WHEREAS, pursuant to Ark. Code Ann. § 14-58-104, the City may purchase motor fuels, oil, asphalt, asphalt oil, and natural gas without soliciting bids.

NOW, THEREFORE, BE IT RESOLVED BY THE CITY COUNCIL OF THE CITY OF FAYETTEVILLE, ARKANSAS:

Section 1: That the City Council of the City of Fayetteville, Arkansas hereby approves the purchase of petroleum-based oils and lubricants on an as-needed basis from various vendors and in various quantities through the end of 2025.

City of Fayetteville Staff Review Form

2021-0427

Legistar File ID

6/15/2021

City Council Meeting Date - Agenda Item Only
N/A for Non-Agenda Item

Sara Glenn	5/26/2021	FLEET OPERATIONS (770)
Submitted By	**Submitted Date**	**Division / Department**

Action Recommendation:

A resolution to authorize the purchase of oils and lubricants from various vendors and in various quantities that exceed $20,000.00 annually.

Budget Impact:

9700.770.1920-5802.00	SHOP
Account Number	Fund
Project Number	Project Title

Budgeted Item?	Yes	Current Budget	
		Funds Obligated	$ -
		Current Balance	$ -
Does item have a cost?	Yes	Item Cost	
Budget Adjustment Attached?	No	Budget Adjustment	
		Remaining Budget	$ -

V20180321

Purchase Order Number:

Previous Ordinance or Resolution #

Change Order Number:

Approval Date:

Original Contract Number:

Comments: The "item cost" and "current budget" boxes have been left blank because these items will vary depending upon the Fleet Division's fluctuating needs based on vehicle needs.

CITY OF
FAYETTEVILLE
ARKANSAS

CITY COUNCIL MEMO

MEETING OF JUNE 15TH, 2021

TO: Mayor and City Council

THRU: Terry Gulley, Director of Transportation

FROM: Sara Glenn, Fleet Operations Superintendent

DATE: May 26th, 2021

SUBJECT: **Approval to Purchase oil and Lubricants within approved budget**

RECOMMENDATION:
City Council to authorize the purchase of petroleum-based oil and lubricants within approved annual budgets from various vendors and quantities that may exceed $20,000.00

BACKGROUND:
In the past, the City has solicited bids for oils and lubricants on a contract basis. Due to the volatility of petroleum-based markets, and varied pricing structures that distributors receive from their suppliers, the City has been unable to maintain an effective contract that is mutually beneficial to both parties. Purchasing recently notified Fleet Services that oils and lubricants are now exempt from quotes due to a volatile market.

DISCUSSION:
Fleet recommends that Council authorizes the purchase of oils and lubricants from various vendors and in various quantities that exceed $20,000.00 annually. Purchases will be within annual approved budgets.

BUDGET/STAFF IMPACT:
Sufficient funds have been budgeted for these purchases.

Attachments:

CITY OF FAYETTEVILLE ARKANSAS

CITY COUNCIL MEMO
2026-1790

MEETING OF JUNE 16, 2026

TO: Mayor Rawn and City Council

THROUGH: Terry Gulley, Asst Public Works Director - Ops

FROM: Ross Jackson, Fleet Operations Superintendent

SUBJECT: **Water Sewer expansion walk behind roller purchase through G W Van Keppel Company.**

RECOMMENDATION:
A RESOLUTION TO AUTHORIZE THE PURCHASE OF A WALK BEHIND ROLLER WITH ATTACHMENTS IN THE AMOUNT OF $45,000.08 FROM G W VAN KEPPEL COMPANY PLUS ANY ADDITIONAL TAXES, SURCHARGES, FREIGHT CHARGES OR DELIVERY FEES UP TO 10% OF THE ORIGINAL PURCHASE PRICE IN ACCORDANCE WITH A SOURCEWELL COOPERATIVE PURCHASING CONTRACT (060122-BAI) AND THE APPROVAL OF A BUDGET AMENDMENT.

BACKGROUND:
Water Sewer has a need for an expansion roller for their new construction crew. If approved, it will be asset 9397 (WSEW_F129).

DISCUSSION:
As the Water and Sewer department continues their new construction division efforts, a trench roller is a necessary piece of equipment which they anticipate will have a high utilization rate. Currently, the Water Sewer department is paying around $1,000 per week, $2,000 per month to rent a trench roller. Given this will be a continual expense, purchasing it would have an approximate 3 to 4 year ROI with an expected 8-10 year expected life cycle.

This machine is necessary to obtain adequate compaction within the roadway as Water Sewer installs new utilities, backfills, and compacts material for paving.

BUDGET/STAFF IMPACT:
This is not a budgeted FY26 expansion, a budget amendment is attached for your approval.

ATTACHMENTS: 3. Staff Review Form - 9397 EXP WSEW_F129 , 4. Budget Adjustment- 9397 WSEW_F129, 5. Quote - Van Keppal $41,190.00, 6. Email Documentation

113 West Mountain Street
Fayetteville, AR 72701
(479) 575-8323

File #: 2026-1790

A RESOLUTION TO APPROVE THE PURCHASE OF A TRENCH ROLLER WITH ATTACHMENTS FROM G W VAN KEPPEL COMPANY IN THE TOTAL AMOUNT OF $45,000.08, PURSUANT TO A SOURCEWELL COOPERATIVE PURCHASING CONTRACT, PLUS ANY APPLICABLE SURCHARGES, FREIGHT CHARGES, OR DELIVERY FEES UP TO 10% OF THE ORIGINAL PURCHASE PRICE, AND TO APPROVE A BUDGET AMENDMENT

WHEREAS, currently, the Water and Sewer department is paying approximately $2,000 per month to rent a trench roller as a continued expense; and

WHEREAS, the machine is necessary to obtain adequate compaction within the roadway as Water and Sewer installs new utilities, backfills, and compacts material for paving and purchasing one would have a 3 to 4 year return on investment with an 8-10 year life cycle.

NOW, THEREFORE, BE IT RESOLVED BY THE CITY COUNCIL OF THE CITY OF FAYETTEVILLE, ARKANSAS:

Section 1: That the City Council of the City of Fayetteville, Arkansas hereby authorizes the purchase of a walk behind trench roller with attachments from G W Van Keppel Company in the total amount of $45,000.08, pursuant to a Sourcewell cooperative purchasing contract, plus any applicable surcharges, freight charges, or delivery fees up to 10% of the original purchase price.

Section 2: That the City Council of the City of Fayetteville, Arkansas hereby approves a budget amendment, a copy of which is attached to this Resolution.

City of Fayetteville Staff Review Form

2026-1790

Item ID

6/16/2026

City Council Meeting Date - Agenda Item Only
N/A for Non-Agenda Item

Chelsey Voden	5/12/2026	FLEET OPERATIONS (770)
Submitted By	**Submitted Date**	**Division / Department**

Action Recommendation:

A RESOLUTION TO AUTHORIZE THE PURCHASE OF A WALK BEHIND ROLLER WITH ATTACHMENTS IN THE AMOUNT OF $45,000.08 FROM G W VAN KEPPEL COMPANY PLUS ANY ADDITIONAL TAXES, SURCHARGES, FREIGHT CHARGES OR DELIVERY FEES UP TO 10% OF THE ORIGINAL PURCHASE PRICE IN ACCORDANCE TO A SOURCEWELL COOPERATIVE PURCHASING CONTRACT (060122-BAI) AND THE APPROVAL OF A BUDGET AMENDMENT.

Budget Impact:

9700.770.1920-5802.00	SHOP
Account Number	Fund
97000.5400.720	FLEET EXPANSION VEHICLES
Project Number	Project Title

Budgeted Item?	Yes	Total Amended Budget	$	1,383,327.00
		Expenses (Actual+Encum)	$	1,168,570.71
		Available Budget	$	**214,756.29**
Does item have a direct cost?	Yes	Item Cost	$	45,000.08
Is a Budget Amendment attached?	Yes	Budget Amendment	$	45,250.00
		Remaining Budget	$	**215,006.21**

Purchase Order Number: _____

Previous Ordinance or Resolution # _____

Change Order Number: _____

Approval Date: _____

Original Contract Number: _____

Comments:

City of Fayetteville, Arkansas - Budget Amendment/Adjustment (Agenda)

Budget Year	Division /Org2	FLEET OPERATIONS (770)	BA Number
2026	Requestor:	Ross Jackson	

BUDGET AMENDMENT/ADJUSTMENT DESCRIPTION:

Currently W&S rents a trench roller, as they continue to install new water and sewerlines it is more economical to purchase the trench compactor as apposed to renting it. Currently W&S is renting the equipment for about $24,000 per year. New unit will be an expansion, unit 9397 (WSEW_F129).

COUNCIL DATE: 6/16/2026

ITEM ID#: **2026-1790**

April Melton
5/20/2026 9:46 AM

Budget Division Date

TYPE: **D - (City Council)**

JOURNAL #:

GLDATE: **6/16/2026**

CHKD/POSTED: /

RESOLUTION/ORDINANCE

v.202658

TOTAL	45,100	45,100				
	Increase / (Decrease)		Project.Sub#			
Account Number	Expense	Revenue	Project	Sub.Detl	AT	Account Name
5400.720.1840-5801.00	(45,100)	-	15019	1	EX	Fixed Assets
5400.720.4000-7602.70	45,100	-	59700	5400	EX	Transfers To Funds - Shop
9700.770.1920-6602.40	-	45,100	97000	5400.720	RE	Transfer from Fund - Water & Sewer
9700.770.1920-5802.00	45,100	-	97000	5400.720	EX	Vehicles & Equipment - base
	-	-				
	-	-				
	-	-				
	-	-				
	-	-				
	-	-				
	-	-				
	-	-				
	-	-				
	-	-				
	-	-				
	-	-				
	-	-				

QUOTATION

09 April, 2026

The G.W. VAN KEPPEL CO.
- BMP8500

QUOTATION : EQT000042

CITY OF FAYETTEVILLE, ARKANSAS

1525 SOUTH HAPPY HOLLOW ROAD, FAYETTEVILLE
AR 72701, US

CALL OR VISIT:
913.281.4800
www.vankeppel.com

Van Keppel
100 YEARS STRONG
SINCE 1926

PLEASE REMIT TO:
The G.W. Van Keppel Company
PO Box 879515
Kansas City, MO 64187-9515

QUOTATION NO	DATE
EQT000042	04/08/2026
PAYMENT TERMS DUE ON RECEIPT	

The G.W. VAN KEPPEL CO.
2218 INDUSTRIAL PARK RD
VAN BUREN AR 72956

CUSTOMER NO
BP0007646
CUST REF **BMP 8500**

EQUIPMENT SALES QUOTATION

INVOICE TO:

CITY OF FAYETTEVILLE, ARKANSAS
1525 SOUTH HAPPY HOLLOW ROAD
FAYETTEVILLE AR 72701

SHIP TO:

The G.W. VAN KEPPEL CO.
2218 INDUSTRIAL PARK RD
VAN BUREN AR 72956

SALESMAN : HENSON, LANDON

DELIVERY TERMS : Customer Pick Up

QUOTATION GOOD THRU : 05/08/2026

***WARRANTY - STANDARD FACTORY WARRANTY

CITY OF FAYETTEVILLE SOURCEWELL #
BOMAG SOURCEWELL # 060122-BAI

UNIT	QTY	UNIT PRICE	TOTAL
BOMAG BMP8500 WALK BEHIND ROLLER **BOMAG MODEL:BMP8500**	1	41,190.00	41,190.00

MACHINE OPTION DESCRIPTION MAT. NO PRICE (USD)
BASIC PRODUCT BMP 8500 *NEW* 720 000 21 53,914
EMISSION STAGE: STAGE V/TIER4f 720 001 00

FACTORY KIT OPTION DESCRIPTION MAT. NO PRICE (USD)
DRUM B41 DRUM EXTENSION *NEW* 720 001 00 1
Not in combination with B2 Smooth drum

FIELD
INSTALLATION
KIT OPTION DESCRIPTION MAT. NO PRICE (USD)
B2 SMOOTH DRUM 720 032 15 6,659
BMP 8500 SMOOTH DRUM (FIELD KIT)

SUB TOTAL: **41,190.00**

TOTAL PURCHASE		41,190.00
MISC CHARGES		0.00
SALES TAX		3,810.08
TOTAL AMOUNT	**(USD)**	**45,000.08**

Thank you for this

The G.W. VAN KEPPEL CO. | **CUSTOMER ACCEPTANCE** | **CUSTOMER PO**

Jackson, Ross

From: Henson, Landon <lhenson@vankeppel.com>
Sent: Tuesday, May 12, 2026 10:20 AM
To: Jackson, Ross
Subject: Re: Quote

CAUTION: This email originated from outside of the City of Fayetteville. Do not click links or open attachments unless you recognize the sender and know the content is safe.

Ross, thank you for the opportunity to do business with you and the City of Fayetteville we looked forward to helping you and your team grow!

Yes, we will accept a PO in-lieu, and yes, we will continue to honor pricing through June.

Get Outlook for iOS

From: Jackson, Ross <rjackson@fayetteville-ar.gov>
Sent: Tuesday, May 12, 2026 9:53 AM
To: Henson, Landon <lhenson@vankeppel.com>
Subject: Quote

CAUTION - EXTERNAL EMAIL: This email originated from outside of G. W. Van Keppel. Do not click links or open attachments unless you recognize the sender and know the content is safe. Any concerns please reach out to the Help Desk.

Landon,

On the bottom of this quote there are signature loines for G W Van Keppel Co., customer and customer PO.

I plan to put this on the June 16th City Council meeting for purchase approval.

I need to know the following answers; **1.)** Will you accept a PO in-lieu of signatures and **2.)** Will you honor pricing through June on this?

Thank you,

Ross Jackson Jr., CAFM
Fleet Operations Superintendent
Fleet Operations
Public Works Department
City of Fayetteville, Arkansas
479-444-3494
rjackson@fayetteville-ar.gov

CITY OF FAYETTEVILLE ARKANSAS

CITY OF FAYETTEVILLE ARKANSAS

CITY COUNCIL MEMO
2026-1789

MEETING OF JUNE 16, 2026

TO: Mayor Rawn and City Council

THROUGH: Terry Gulley, Asst Public Works Director - Ops

FROM: Ross Jackson, Fleet Operations Superintendent

SUBJECT: **Transportation Department excavator replacement through JA Riggs Tractor Co.**

RECOMMENDATION:
A RESOLUTION TO APPROVE THE PURCHASE OF ONE EXCAVATOR AND ATTACHMENTS IN THE AMOUNT OF $104,726.81 FROM JA RIGGS TRACTOR CO. PURSUANT TO A SOURCEWELL COOPERATIVE PURCHASING CONTRACT (020223-CAT) PLUS ANY APPLICABLE SURCHARGES, FREIGHT CHARGES AND DELIVERY FEES UP TO 10% OF THE ORIGINAL PURCHASE PRICE.

BACKGROUND:
829 (TRAN_F039) is a 2015 excavator that has surpassed its expected service life and is recommended for replacement.

DISCUSSION:

Asset 829 has been in service since 2015 and has exceeded its established eight-year life cycle. According to our fleet management software, it has reached the replacement grading threshold, indicating replacement is recommended due to age, utilization, and increasing maintenance requirements.

Once an asset reaches the replacement threshold, maintenance and downtime costs typically begin increasing at a rate that outweighs the financial benefit of delaying replacement. Based on the unit's condition, utilization, and life cycle indicators, this excavator has exceeded its most cost-effective service window.

Replacing the unit at this time will support operational reliability, reduce long-term maintenance costs, and ensure continued service delivery for departments utilizing the equipment. The replacement unit is requested with additional attachments for the transportation department's daily changing requirements.

BUDGET/STAFF IMPACT:
This is a budgeted replacement and sufficient funds are available within the fleet replacement fund.

ATTACHMENTS: 3. Staff Review Form, 4. CAT 305 Quote

113 West Mountain Street
Fayetteville, AR 72701
(479) 575-8323

File #: 2026-1789

A RESOLUTION TO APPROVE THE PURCHASE OF ONE EXCAVATOR AND ATTACHMENTS IN THE TOTAL AMOUNT OF $104,726.81 FROM JA RIGGS TRACTOR CO., PURSUANT TO A SOURCEWELL COOPERATIVE PURCHASING CONTRACT, PLUS ANY APPLICABLE SURCHARGES, FREIGHT CHARGES, AND DELIVERY FEES UP TO 10% OF THE ORIGINAL PURCHASE PRICE

BE IT RESOLVED BY THE CITY COUNCIL OF THE CITY OF FAYETTEVILLE, ARKANSAS:

Section 1: That the City Council of the City of Fayetteville, Arkansas hereby authorizes the purchase of one excavator and attachments in the total amount of $104,726.81 from JA Riggs Tractor Co., pursuant to a Sourcewell cooperative purchasing contract, plus any applicable surcharges, freight charges, and delivery fees up to 10% of the original purchase price.

City of Fayetteville Staff Review Form

2026-1789

Item ID

6/16/2026

City Council Meeting Date - Agenda Item Only
N/A for Non-Agenda Item

Ross Jackson	5/14/2026	FLEET OPERATIONS (770)
Submitted By	**Submitted Date**	**Division / Department**

Action Recommendation:

A RESOLUTION TO APPROVE THE PURCHASE OF ONE EXCAVATOR AND ALL ATTACHMENTS IN THE AMOUNT OF $104,726.81 FROM JA RIGGS TRACTOR CO. PURSUANT TO A SOURCEWELL COOPERATIVE PURCHASING CONTRACT (020223-CAT) PLUS ANY APPLICABLE SURCHARGES, FREIGHT CHARGES AND DELIVERY FEES UP TO 10% OF THE ORIGINAL PURCHASE PRICE.

Budget Impact:

9700.770.1920-5802.00	SHOP
Account Number	Fund
97001.2100.410	Fleet Replacement- Transportation
Project Number	Project Title

Budgeted Item?	Yes	Total Amended Budget	$	2,259,295.00
		Expenses (Actual+Encum)	$	923,444.79
		Available Budget	$	**1,335,850.21**
Does item have a direct cost?	Yes	Item Cost	$	104,726.81
Is a Budget Amendment attached?	No	Budget Amendment	$	-
		Remaining Budget	$	**1,231,123.40**

Purchase Order Number: _____ **Previous Ordinance or Resolution #** _____

Change Order Number: _____ **Approval Date:** _____

Original Contract Number: _____

Comments:

2026 Sourcewell Medium/CCE Contract#CAT020223

Quote Quote 185019-02

(TRAN_F039)

Mar 23, 2026

CITY OF FAYETTEVILLE
1525 S HAPPY HOLLOW RD
FAYETTEVILLE, Arkansas 72701-7258

Dear Ross Jackson,
We are pleased to quote the following for your purchase consideration
One (1) New Caterpillar Model: 305 Compact Construction Equipment with all standard equipment in addition to the additional specifications listed below:

STOCK NUMBER:	**SERIAL NUMBER:**	**YEAR:**	**SMU:**

SELL PRICE	$104,726.81
CSA	Included
NET BALANCE DUE	**$104,726.81**

WARRANTY

Extended Warranty:	24 mo. / 2000 hr. Premier. warranty whichever comes first doesnt cover travel
CSA	24 MO/1000 HR PARTS ONLY CVA

Thank you for your interest in Riggs CAT and Caterpillar products for your business needs.If there are any questions, please do not hesitate to contact me.

Sincerely,
Draven Doss
Machine Sales Representative Riggs CAT
dossd@jariggs.com
+1 (501) 353-9322

Accepted by_____ **on** _____

_____
Signature

One (1) New Caterpillar Model: 305 Compact Construction Equipment with all standard equipment in addition to the additional specifications listed below:

MACHINE SPECIFICATIONS
BELT, SEAT, 76MM RETRACTABLE (3")
STICK, LONG, 1- AUX, ANGLE BLD
BOOM, SWING
LIGHTS, LED
LIGHTS, LED, REAR
LINKAGE BUCKET W/LIFTING EYE
MONITOR NEXT GEN, ADVANCED
MIRROR, CAB, RIGHT
CAT KEY, WITH PASSCODE OPTION
LINES, QICK COUPLER, LONG STICK
CAB, WITH HEAT AND A/C
TRACK, 400MM, RUBBER BELT (16",)
CONTROL, QICK COUPLER, 3 LINE
BLADE, ANGLE, BOCE
CAMERA, REAR VIEW
ALARM, TRAVEL
EASE OF USE HARDWARE, LONG STICK, 5T
SOFTWARE, PROPORTIONAL CONTROL
SOFTWARE, STICK STEER CONTROL
SOFTWARE, 2 WAY CONTROL
SOFTWARE, CODED START
E-FENCE SOFTWARE
INDICATE SOFTWARE
THUMB + COUPLER HYDRAUILC
AUXILARY SHUTOFF (THUMB SHUTOFF)
BUCKET-HD, 18", 3.1 FT3, 5T
BUCKET-HD, 24", 4.6 FT3, 5T
INTEGRATED RADIO V2
PRODUCT LINK, CELLULAR PLE643
BUCKET-DCT, 47", 7.2 FT3, 5T
HAMMER, B6
LINES, B4-B6-B8 HAMMER, 5T-9T
KIT, COUNTER WEIGHT, EXTR
BUCKET-HD, 12", 2.1 FT3, 5T

LIST TOTAL - $144,842
SOURCEWELL/RIGGS DISCOUNT TOTAL - $40,115.1

CITY OF FAYETTEVILLE ARKANSAS

CITY COUNCIL MEMO
2026-1788

MEETING OF JUNE 16, 2026

TO: Mayor Rawn and City Council

THROUGH: Terry Gulley, Asst Public Works Director - Ops

FROM: Ross Jackson, Fleet Operations Superintendent

SUBJECT: **Water Sewer Department work truck replacement through Olathe Ford Sales Inc. - DBA Olathe Ford Lincoln**

RECOMMENDATION:
A RESOLUTION TO APPROVE THE PURCHASE OF ONE FORD F150 HYBRID IN THE AMOUNT OF $53,593.06 FROM OLATHE FORD LINCOLN PURSUANT TO A SOURCEWELL COOPERATIVE PURCHASING CONTRACT (081325-OLA) PLUS ANY APPLICABLE SURCHARGES, FREIGHT CHARGES AND DELIVERY FEES UP TO 10% OF THE ORIGINAL PURCHASE PRICE.

BACKGROUND:
Asset 2183 (WSEW_F074), a 2015 Ford F-250, has surpassed its expected service life and is recommended for replacement.

DISCUSSION:

This 2015 Ford F-250 currently has approximately 109,000 odometer miles and over 13,000 engine hours. Using the industry standard idle equivalency of one engine hour equaling approximately 33 driven miles, the engine hours alone equate to roughly 429,000 equivalent miles, resulting in an estimated total operational wear exceeding 538,000 miles. This elevated wear is primarily due to extended drive cycles and frequent on-call use within the Water and Sewer Division.

The unit has experienced ongoing intermittent electrical and CAN communication network issues that have persisted. Due to the vehicle's age, utilization, and increasing reliability concerns, Fleet Operations recommends replacement and right-sizing of the asset to a smaller, more fuel-efficient 1/2-ton hybrid work truck. Hybrid platforms are particularly beneficial for this application because they significantly reduce engine idle time and associated power train wear, helping extend service life while reducing fuel and maintenance costs in high idle municipal operations.

Industry fleet management best practices recognize an optimal replacement window where maintenance costs remain manageable, reliability is acceptable, and total life cycle cost is minimized. Once a vehicle reaches the Faster 15-point replacement threshold, maintenance and downtime costs typically begin increasing faster than the savings gained from delaying replacement.

BUDGET/STAFF IMPACT:
This is a planned and budgeted FY26 replacement.

ATTACHMENTS: 3. Staff Review Form 2183 - 2332 WSEW_F074, 4. Olathe HYB F-150 Quote $53,593.06, 5. F150 Hybrid - Price Hold Through June

113 West Mountain Street
Fayetteville, AR 72701
(479) 575-8323

File #: 2026-1788

A RESOLUTION TO APPROVE THE PURCHASE OF ONE FORD F150 HYBRID FROM OLATHE FORD LINCOLN IN THE AMOUNT OF $53,593.06, PURSUANT TO A SOURCEWELL COOPERATIVE PURCHASING CONTRACT, PLUS ANY APPLICABLE SURCHARGES, FREIGHT CHARGES, AND DELIVERY FEES UP TO 10% OF THE ORIGINAL PURCHASE PRICE

BE IT RESOLVED BY THE CITY COUNCIL OF THE CITY OF FAYETTEVILLE, ARKANSAS:

Section 1: That the City Council of the City of Fayetteville, Arkansas hereby authorizes the purchase of one Ford F-150 Hybrid from Olathe Ford Lincoln in the amount of $53,593.06, pursuant to a Sourcewell cooperative purchasing contract, plus any applicable surcharges, freight charges, and delivery fees up to 10% of the original purchase price.

City of Fayetteville Staff Review Form

2026-1788

Item ID

6/16/2026

City Council Meeting Date - Agenda Item Only
N/A for Non-Agenda Item

Ross Jackson	5/14/2026	FLEET OPERATIONS (770)
Submitted By	**Submitted Date**	**Division / Department**

Action Recommendation:

A RESOLUTION TO APPROVE THE PURCHASE OF ONE FORD F150 HYBRID IN THE AMOUNT OF $53,593.06 FROM OLATHE FORD LINCOLN PURSUANT TO A SOURCEWELL COOPERATIVE PURCHASING CONTRACT (081325-OLA) PLUS ANY APPLICABLE SURCHARGES, FREIGHT CHARGES AND DELIVERY FEES UP TO 10% OF THE ORIGINAL PURCHASE PRICE.

Budget Impact:

9700.770.1920-5802.00	SHOP
Account Number	Fund
97001.5400.720	Fleet Replacement- WS
Project Number	Project Title

Budgeted Item?	Yes	Total Amended Budget	$	2,712,518.00
		Expenses (Actual+Encum)	$	1,829,992.11
		Available Budget	$	**882,525.89**
Does item have a direct cost?	Yes	Item Cost	$	53,593.06
Is a Budget Amendment attached?	No	Budget Amendment	$	-
		Remaining Budget	$	**828,932.83**

Purchase Order Number: _____ **Previous Ordinance or Resolution #** _____

Change Order Number: _____ **Approval Date:** _____

Original Contract Number: _____

Comments:

OLATHE FLEET

Purchase Order / Quote

OLATHE FORD SALES INC
SANDRA GONZALEZ
GOVERNMENT MANAGER
DIRECT - 913-312-5371

Date	4/1/2026
Valid Until	5/1/26
Contract	SOURCEWELL - 081325- OLA
PO	
Lead Time	12-15 WEEKS

Customer:	Invoice Address:	Delivery Address:
FAYETTEVILLE FIN - QC689 SOURCEWELL - 34143		Same

Description - Vehicle Preview Details		Line Total
2026 FORD F150 4X4 SUPERCREW XL - 157 - HYBRID		$50,242.00
F150 4X4 SUPERCREW XL - 157 157 INCH WHEELBASE TOTAL BASE VEHICLE OXFORD WHITE CLOTH 40/CONSOLE/40 MEDIUM DARK SLATE EQUIPMENT GROUP 104A .XL HYBRID SERIES .LED FOG LAMPS .17" SILVER PAINTED ALUMINUM .CHROME FRONT/REAR BUMPERS .PRIVACY GLASS W/REAR DEFROSTER .DUAL ZONE AUTO TEMP CONTROL .8-WAY POWER DRIVERS SEAT 3.5L POWERBOOST FULL HYBRID HYBRID ELEC 10-SPD AUTO TRN 265/70R 17 BSW ALL-TERRAIN	3.73 ELECTRONIC LOCK RR AXLE 7400# GVWR PACKAGE FORD FLEET SPECIAL ADJUSTMENT JOB #2 ORDER FRONT LICENSE PLATE BRACKET TOW/HAUL PACKAGE .INTEGRATED TRAILER BRAKE CONT FLOW THRU CONSOLE VINYL LID STANDARD FUEL TANK CONN PKG: 1 YR INCL W/FORD APP BEDLINER-TOUGHBED SPRAYIN*ACCY	
	BED COVER WITH GAS SHOCKS, FLOOR LINERS, SEAT COVERS	$2,851.06
	FACTORY OPTION TOTAL MSRP - $57,490 - 12.6% OFF	

Subtotal less trade-in		$53,093.06
Sales Tax		$0.00
Tire Tax	0	$0.00
Extended Warranty		$0.00
Dropship		$0.00
Delivery		$500.00
MSO / ODO		$0.00
Total Per Unit		$53,593.06
Quantity of Units		1
PO Total		**$53,593.06**

Special Notes and Instructions

MSO/ODO STATEMENT. CUST RESPONSIBLE FOR REGISTRATION, TAXES AND TITLING

QUOTES ARE ONLY VALID UNTIL CURRENT MODEL YEAR ORDER BANK CLOSES. OLATHE FORD RESERVES THE RIGHT TO CHARGE CUSTOMER FOR FLOORPLAN IF UPFITTING TAKES AN EXCESSIVE AMOUNT OF TIME.

PAYMENTS FOR VEHICLES MUST BE MADE WITHIN 30 DAYS OF INVOICE OR OLATHE FORD RESERVES THE RIGHT TO CHARGE FLOORPLAN INTEREST FOR EACH DAY INVOICE IS OVERDUE

Above information is not an invoice and only an estimate of services/goods described above. Quote subject to change.

Please confirm your acceptance of this quote by signing this document, and returning your PO.

Signature

Print Name

Date

If you have any questions concerning this quote, contact Sandra Gonzalez

Thank you for your business!

AFI
6606 Stadium Drive
Kansas City MO 64129
Phone: (816) 861-4000
afi-kc.com

QUOTE

Quote ID: Q12753 **Rev** 0
Quote Date: 4/1/2026
Quote Valid Until: 5/31/2026

Customer: OLATHE FORD
305 S FIR
OLATHE KS 66061

Contact: SANDRA GONZALEZ
Phone:
Email: sgonzalez@olathefleet.com
Salesperson: Ryan Jennings
Sales Email: Ryanj@afi-kc.com

Make:	*Model:*	*Year:*	*Single/Dual:*
Cab Type:	*Wheelbase:*	*Cab-to-Axle:*	*VIN:*
Order Description OFC SANDRA/FAYETTEVILLE F150			

Line	Quantity	Description	Unit Price	Amount
20	1 EA	Default Part (for Unknown Parts) 21-C F150 EXT/CREW CAB 6.5 FT BED-YZ OX WHITE UNDERCOVER LUX	$2,024.99	**$2,024.99**
30	1 EA	WEATHERTECH FLOOR LINER W/ CHANNELS AND RESEVOIR FOR LIQUIDS - 2 PC	$168.63	**$168.63**
40	1 EA	Default Part (for Unknown Parts) 15-C F150 SUPERCAB/17-C SUPER DUTY SUPER CAB W/FRONT ROW BENCH REAR SEAT FLOORLINER BLACK	$121.45	**$121.45**
50	1 EA	Default Part (for Unknown Parts) Seat Cover; Carhartt® SeatSaver®; Seat Style GB - 40/20/40 Split Bench With Adjustable Headrests; Duck Weave Fabric; Gravel;	$503.99	**$503.99**

Notes:

Shop Supplies:	**32.00**
Sub Total:	**$2,851.06**
Sales Tax:	**$0.00**
Grand Total:	**$2,851.06**

As of: 4/1/2026 10:01:05 AM

Customer must fill out the information below before the order can be processed...

Accepted by:			
Date:		**P.O. Number:**	

*** Labor and installation is included in all pricing.**

* Terms are Due Upon Receipt unless prior credit arrangements are made at the time of order.

* Please note if chassis is furnished, it is as a convenience and terms are Net Due on receipt of Chassis.

* A service charge of 3% will be applied to all credit card purchases.

AFI
6606 Stadium Drive
Kansas City MO 64129
Phone: **(816) 861-4000**
afi-kc.com

QUOTE

Quote ID: Q12753 **Rev** 0

Quote Date: 4/1/2026

Quote Valid Until: 5/31/2026

As of: 4/1/2026 10:01:05 AM

Jackson, Ross

From: Sandra Gonzalez <sgonzalez@olathefleet.com>
Sent: Wednesday, May 20, 2026 1:03 PM
To: Jackson, Ross
Subject: Re: F150 Hybrid Quote

CAUTION: This email originated from outside of the City of Fayetteville. Do not click links or open attachments unless you recognize the sender and know the content is safe.

No problem at all!

Sandra Gonzalez
Government Sales Manager
1845 E Santa Fe
Olathe, KS 66062
505-850-5504 - Cell
thefleetqueen@olathefleet.com

OLATHE FLEET

Book time to meet with me

From: Jackson, Ross <rjackson@fayetteville-ar.gov>
Sent: Wednesday, May 20, 2026 12:57 PM
To: Sandra Gonzalez <sgonzalez@olathefleet.com>
Subject: F150 Hybrid Quote

Good afternoon Sandra,

Could you let me know if pricing will stay good through the month of June on this please?

Thank you,

Ross Jackson Jr., CAFM
Fleet Operations Superintendent

Fleet Operations
Public Works Department
City of Fayetteville, Arkansas
479-444-3494
rjackson@fayetteville-ar.gov

CITY OF FAYETTEVILLE ARKANSAS

Caution:
This email originated from outside the organization. Do not click links or open attachments unless you recognize the sender and know the content is safe.

CITY OF FAYETTEVILLE ARKANSAS

CITY COUNCIL MEMO
2026-1787

MEETING OF JUNE 16, 2026

TO: Mayor Rawn and City Council

THROUGH: Terry Gulley, Asst Public Works Director - Ops

FROM: Ross Jackson, Fleet Operations Superintendent

SUBJECT: **Purchase of two expansion mobile traffic signals for the Water Sewer Department through OMJC Signal Inc.**

RECOMMENDATION:
A RESOLUTION TO AUTHORIZE THE PURCHASE OF ONE SET OF TWO PORTABLE TRAFFIC SIGNALS IN THE AMOUNT OF $65,696.47 FROM OMJC SIGNAL INC. PLUS ANY ADDITIONAL TAXES, SURCHARGES, FREIGHT CHARGES, TITLE, LICENSING OR DELIVERY FEES UP TO 10% OF THE ORIGINAL PURCHASE PRICE IN ACCORDANCE WITH A BUYBOARD COOPERATIVE PURCHASING CONTRACT (795-26) AND APPROVE A BUDGET AMENDMENT.

BACKGROUND:
Water and Sewer utility construction activity has been increasing throughout the city, requiring more traffic control while performing needed work on city infrastructure. If approved, it will be asset 9399 (WSEW_F130).

DISCUSSION:

The purchase of these portable traffic signals will support ongoing Water and Sewer operations and reduce the need for continued rental expenses associated with similar equipment on current and future projects. Based on operational usage and projected demand, purchasing the equipment is expected to provide a more cost-effective long-term solution.

In addition to supporting Water and Sewer operations, the portable traffic signals may also be utilized by other departments as operational needs arise. The equipment will improve work zone safety and traffic control on linear projects, reduce reliance on manual flagging operations, and allow personnel to be utilized more efficiently while maintaining safety and traffic control compliance.

BUDGET/STAFF IMPACT:
This is not a FY26 budgeted expansion, a budget amendment is attached for your approval.

ATTACHMENTS: 3. Staff Review Form, 4. Budget Adjustment, 5. OMJC Final Quote , 6. Price Hold Through June, 7. BuyBoard Contract 795-26 OMJC Tabulation Sheet, 8. OMJC BuyBoard Contract-1

113 West Mountain Street
Fayetteville, AR 72701
(479) 575-8323

File #: 2026-1787

A RESOLUTION TO APPROVE THE PURCHASE OF PORTABLE TRAFFIC SIGNALS FROM OMJC SIGNAL INC. IN THE TOTAL AMOUNT OF $65,696.47, PURSUANT TO A BUYBOARD COOPERATIVE PURCHASING CONTRACT, PLUS ANY APPLICABLE SURCHARGES, FREIGHT CHARGES, TITLE, LICENSING OR DELIVERY FEES UP TO 10% OF THE ORIGINAL PURCHASE PRICE, AND TO APPROVE A BUDGET AMENDMENT.

WHEREAS, water and sewer utility construction activity has been increasing through the city, requiring more traffic control while performing needed work on city infrastructure; and

WHEREAS, the purchase of these portable traffic signals will support ongoing Water and Sewer operations and reduce the need for continued rental expenses associated with similar equipment on current and future projects and will provide a more cost-effective long-term solution; and

WHEREAS, the portable traffic signals may also be utilized by other departments as operational needs arise, improving work zone safety and traffic control on linear projects, reducing reliance on manual flagging operations, and allowing personnel to be utilized more efficiently while maintaining safety and traffic control compliance.

NOW, THEREFORE, BE IT RESOLVED BY THE CITY COUNCIL OF THE CITY OF FAYETTEVILLE, ARKANSAS:

Section 1: That the City Council of the City of Fayetteville, Arkansas hereby authorizes the purchase of portable traffic signals from OMJC Signal Inc. in the total amount of $65,696.47, pursuant to a BuyBoard cooperative purchasing contract, plus any applicable surcharges, freight charges, title, licensing or delivery fees up to 10% of the original purchase price.

Section 2: That the City Council of the City of Fayetteville, Arkansas hereby approves a budget amendment, a copy of which is attached to this Resolution.

City of Fayetteville Staff Review Form

2026-1787

Item ID

6/16/2026

City Council Meeting Date - Agenda Item Only
N/A for Non-Agenda Item

Ross Jackson	5/14/2026	FLEET OPERATIONS (770)
Submitted By	**Submitted Date**	**Division / Department**

Action Recommendation:

A RESOLUTION TO AUTHORIZE THE PURCHASE OF ONE SET OF TWO PORTABLE TRAFFIC SIGNALS IN THE AMOUNT OF $65,696.47 FROM OMJC SIGNAL INC. PLUS ANY ADDITIONAL TAXES, SURCHARGES, FREIGHT CHARGES OR DELIVERY FEES UP TO 10% OF THE ORIGINAL PURCHASE PRICE IN ACCORDANCE WITH A BUYBOARD COOPERATIVE PURCHASING CONTRACT (795-26) AND APPROVE A BUDGET AMENDMENT.

Budget Impact:

9700.770.1920-5802.00	FLEET
Account Number	Fund
97000.5400.720	FLEET EXPANSION VEHICLES- W&S
Project Number	Project Title

Budgeted Item?	Yes	Total Amended Budget	$	84,489.00
		Expenses (Actual+Encum)	$	84,308.28
		Available Budget	$	**180.72**
Does item have a direct cost?	Yes	Item Cost	$	65,696.47
Is a Budget Amendment attached?	Yes	Budget Amendment	$	66,000.00
		Remaining Budget	$	**484.25**

Purchase Order Number: _____ **Previous Ordinance or Resolution #** _____

Change Order Number: _____ **Approval Date:** _____

Original Contract Number: _____

Comments:

City of Fayetteville, Arkansas - Budget Amendment/Adjustment (Agenda)

Budget Year	Division /Org2	FLEET OPERATIONS (770)	BA Number
2026	Requestor:	Ross Jackson	

BUDGET AMENDMENT/ADJUSTMENT DESCRIPTION:

This budget adjustment is requested for the purchase of a portable traffic signal to support Water and Sewer operations. The cost is comparable to a single project rental, making this a cost-effective long-term investment. Owning the equipment will improve traffic control and job site safety on utility projects while reducing the need for manual flagging and additional personnel. Traffic signal to be unit 9399 WSEW_F130.

RESOLUTION/ORDINANCE

COUNCIL DATE: 6/16/2026

ITEM ID#: **2026-1787**

April Melton
5/20/2026 9:03 AM

Budget Division Date

TYPE: **D - (City Council)**

JOURNAL #:

GLDATE: **6/16/2026**

CHKD/POSTED: /

v.202646

	Increase / (Decrease)		Project.Sub#			
Account Number	Expense	Revenue	Project	Sub.Detl	AT	Account Name
TOTAL	66,000	66,000				
5400.720.1840-5801.00	(66,000)	-	15019	1	EX	Fixed Assets
5400.720.4000-7602.70	66,000	-	59700	5400	EX	Transfers To Funds - Shop
9700.770.1920-6602.40	-	66,000	97000	5400.720	RE	Transfer from Fund - Water & Sewer
9700.770.1920-5802.00	66,000	-	97000	5400.720	EX	Vehicles & Equipment - base
	-	-				
	-	-				
	-	-				
	-	-				
	-	-				
	-	-				
	-	-				
	-	-				
	-	-				
	-	-				
	-	-				
	-	-				
	-	-				

OMJCSignal
PO Box 1594
Waterloo, IA 50704
403 Chestnut St.
Waterloo, IA 50703
800.776.5999
Fax: 319.236.1554
Email: sales@omjcsignal.com
omjcsignal.com

Quotation

Quote Number
9803

Quote Date
April 29, 2026

Page:
1

Quoted to:
ATTN: Ross Jackson
City of Fayetteville, AR

PH: 479-444-3494
FAX:

SHIP TO:

City of Fayetteville, AR
1525 S Happy Hollow Rd
FAYETTEVILLE, AR 72701

Customer ID	Good Thru	Payment Terms	Sales Rep Name
CFAYETTEVILLE	5/29/26	Net 30 Days	Tarah C. Dalziel

Quantity	Item	Description	Unit Price	Extension
1.00	MISC	LDPTS-M: Per Texas BuyBoard Description MSRP: $36,225; 6% BuyBoard Discount	34,051.50	34,051.50
1.00	MISC	LDPTS-S: Per Texas BuyBoard Description MSRP: $23,000; 6% BuyBoard Discount	21,620.00	21,620.00
2.00	VPR-26-OMJC	Vehicle Motion Detector BuyBoard Contract #795-26 *Freight as Estimate Only*	1,100.00	2,200.00

Freight & handling are in addition to the prices quoted above unless otherwise specified. All parts, materials and components are new unless otherwise specifi
OMJC has been in business since July of 1985 to serve you.

Subtota	57,871.50
Sales Ta	5,642.47
Freight	2,182.50
Tota	65,696.47

Jackson, Ross

From: Tarah Dalziel <Tarah@omjcsignal.com>
Sent: Wednesday, May 20, 2026 10:30 AM
To: Jackson, Ross
Cc: Sales
Subject: Re: New TX BuyBoard Quote

CAUTION: This email originated from outside of the City of Fayetteville. Do not click links or open attachments unless you recognize the sender and know the content is safe.

Good Morning Ross,

We will honor the price through the end of June. Do you need me to change the date and send you an updated quote?

Thanks,

Tarah
TARAH DALZIEL
CUSTOMER CARE MANAGER
OMJC
1.800.776.5999
tarah@omjcsignal.com
www.omjcsignal.com
403 Chestnut Street
Waterloo, IA 50703

From: Jackson, Ross <rjackson@fayetteville-ar.gov>
Sent: Wednesday, May 20, 2026 10:05 AM
To: Tarah Dalziel <Tarah@omjcsignal.com>
Cc: Sales <sales@omjcsignal.com>
Subject: RE: New TX BuyBoard Quote

Tarah,

Could you let me know if the quoted price will be good through the month of June? The quote currently will expire June 12th, this will go to city council June 16th. I will need to know if you will honor the quote through the month of June.

Thank you,

Ross Jackson Jr., CAFM
Fleet Operations Superintendent
Fleet Operations

The Local Government Purchasing Cooperative

For the Period 04/01/2026 to 03/31/2027

Final Catalog Award Report for Traffic Signal Systems and Safety Barrier Products, No. 795-26

1. Discount (%) off catalog/price list for **Traffic Light and Signal Systems, Supplies, and Equipment.**

Vendor Name	Vendor Catalog Information	Percent Discount	Award
Twincrest, Inc. dba Twincrest Technologies	360ns price list	20%	Yes
Design a Sign Inc.	Design a Sign Inc price list	0%	No
Twincrest, Inc. dba Twincrest Technologies	Henke Enterprises price list	20%	Yes
Iteris, Inc.	Iteris Inc price list	10%	Yes
ITS Plus, Inc.	ITS Plus Published price list	10%	Yes
Kimley-Horn and Associates, Inc.	Kimley-Horn price list	10%	Yes
MoboTrex, LLC	MoboTrex price list	10%	Yes
OMJC Signal Inc	OMJC Signal price list	6%	Yes
Paradigm Traffic Systems, Inc	Paradigm price list	0%	Yes
Twincrest, Inc. dba Twincrest Technologies	Pelco price list	20%	Yes
Rhythm Engineering	Rhythm Engineering price list	0%	No
Twincrest, Inc. dba Twincrest Technologies	Seyond price list	20%	Yes
Twincrest, Inc. dba Twincrest Technologies	Texas Wire & Cable price list	20%	Yes
Texas Highway Products, LTD	THP_BB795-26 price list	10%	Yes
Valmont Industries, Inc.	Valmont price list	5%	Yes
Wavetronix LLC	Wavetronix price list	20%	Yes

2. Discount (%) off catalog/price list for **Traffic Safety Barrier, Barricade, and Guardrail Products.**

Vendor Name	Vendor Catalog Information	Percent Discount	Award
Decker Inc. dba Decker Equipment SchoolFix Catalog	Decker Inc price list	5%	Yes
Design a Sign Inc.	Design a Sign Inc price list	0%	No
Guardrail Safety Services LLC	Guardrail Safety Services price list	7%	No
Impact Recovery Systems	Impact Recovery Systems price list	15%	Yes
Iteris, Inc.	Iteris Inc price list	10%	No
Paradigm Traffic Systems, Inc	Paradigm price list	0%	Yes

The Local Government Purchasing Cooperative

For the Period 04/01/2026 to 03/31/2027

Final Catalog Award Report for Traffic Signal Systems and Safety Barrier Products, No. 795-26

2. Discount (%) off catalog/price list for **Traffic Safety Barrier, Barricade, and Guardrail Products.**

Vendor Name	Vendor Catalog Information	Percent Discount	Award
Paradigm Traffic Systems, Inc	Pelco price list	0%	Yes

3. Discount (%) off catalog/price list for **Traffic Intersection Safety Equipment and Products.**

Vendor Name	Vendor Catalog Information	Percent Discount	Award
Decker Inc. dba Decker Equipment SchoolFix Catalog	Decker Inc price list	5%	Yes
Design a Sign Inc.	Design a Sign Inc price list	0%	No
Impact Recovery Systems	Impact Recovery Systems price list	15%	Yes
Iteris, Inc.	Iteris Inc price list	10%	Yes
Texas Highway Products, LTD	THP_BB795-26 price list	10%	Yes

4. Discount (%) off catalog/price list for **Traffic Marker and Sign Products.**

Vendor Name	Vendor Catalog Information	Percent Discount	Award
Decker Inc. dba Decker Equipment SchoolFix Catalog	Decker Inc price list	5%	Yes
Design a Sign Inc.	Design a Sign Inc price list	0%	Yes
Trinity Hawk Investments, Inc. dba FASTSIGNS 10501	FASTSIGNS price list	10%	No
Impact Recovery Systems	Impact Recovery Systems price list	15%	Yes
Iteris, Inc.	Iteris Inc price list	10%	No
Sign Solutions USA, LLC	Sign Solutions price list	15%	Yes
Texas Highway Products, LTD	THP_BB795-26 price list	10%	Yes
Triple-S Steel Holdings, Inc dba Alamo Iron Works	www.aiwdirect.com	10%	No

5. Discount (%) off catalog/price list for **Computerized Traffic Design Plans, Traffic Flagging, and Special Event Services.**

Vendor Name	Vendor Catalog Information	Percent Discount	Award
Guardrail Safety Services LLC	Guardrail Safety Services price list	7%	No
Iteris, Inc.	Iteris Inc price list	10%	Yes

The Local Government Purchasing Cooperative

For the Period 04/01/2026 to 03/31/2027

Final Catalog Award Report for Traffic Signal Systems and Safety Barrier Products, No. 795-26

6. Discount (%) off catalog/price list for **All Other Traffic Light and Signal System Products.**

Vendor Name	Vendor Catalog Information	Percent Discount	Award
Decker Inc. dba Decker Equipment SchoolFix Catalog	Decker Inc price list	5%	Yes
Design a Sign Inc.	Design a Sign Inc price list	0%	No
Iteris, Inc.	Iteris Inc price list	10%	Yes
Rhythm Engineering	Rhythm Engineering price list	0%	No
Valmont Industries, Inc.	Valmont price list	10%	Yes

7. Discount (%) off catalog/price list for **Traffic Light and Signal Systems Repair Parts.**

Vendor Name	Vendor Catalog Information	Percent Discount	Award
Iteris, Inc.	Iteris Inc price list	10%	Yes
Valmont Industries, Inc.	Valmont price list	7%	Yes

8. Discount (%) off catalog/price list for **Traffic Light and Signal Equipment and Products Maintenance/Warranty Agreements.**

Vendor Name	Vendor Catalog Information	Percent Discount	Award
Twincrest, Inc. dba Twincrest Technologies	360ns Service & Support price list	20%	Yes
Iteris, Inc.	Iteris Inc price list	10%	Yes
ITS Plus, Inc.	ITS Plus Published price list	5%	Yes
Kimley-Horn and Associates, Inc.	Kimley-Horn price list	10%	Yes
Rhythm Engineering	Rhythm Engineering price list	1000%	No

9. **Hourly Labor Rate for Installation/Repair Service of Traffic Signal Systems, Products, and Related Items.**

Vendor Name	Not to Exceed Hourly Labor Rate	Bid Price	Award
Bayer Construction Electrical Contractors, Inc. dba Bayer electric	Not to Exceed hourly labor rate for Installation/Repair Service of Traffic Signal Systems, Equipment, and Products.	$105.00	Yes
OMJC Signal Inc	Not to Exceed hourly labor rate for Installation/Repair Service of Traffic Signal Systems, Equipment, and Products.	$150.00	Yes
Rhythm Engineering	Not to Exceed hourly labor rate for Installation/Repair Service of Traffic Signal Systems, Equipment, and Products.	$200.00	No

The Local Government Purchasing Cooperative

For the Period 04/01/2026 to 03/31/2027

Final Catalog Award Report for Traffic Signal Systems and Safety Barrier Products, No. 795-26

9. **Hourly Labor Rate for Installation/Repair Service of Traffic Signal Systems, Products, and Related Items.**

Vendor Name	Not to Exceed Hourly Labor Rate	Bid Price	Award
Texas Highway Products, LTD	Not to Exceed hourly labor rate for Installation/Repair Service of Traffic Signal Systems, Equipment, and Products.	$225.00	Yes
Trinity Hawk Investments, Inc. dba FASTSIGNS 10501	Not to Exceed hourly labor rate for Installation/Repair Service of Traffic Signal Systems, Equipment, and Products.	$225.00	No
Kimley-Horn and Associates, Inc.	Not to Exceed hourly labor rate for Installation/Repair Service of Traffic Signal Systems, Equipment, and Products.	$350.00	Yes
Paradigm Traffic Systems, Inc	Not to Exceed hourly labor rate for Installation/Repair Service of Traffic Signal Systems, Equipment, and Products.	$1,000.00	No
Iteris, Inc.	Not to Exceed hourly labor rate for Installation/Repair Service of Traffic Signal Systems, Equipment, and Products.	$1,400.00	No

10. **Hourly Labor Rate for Installation/Repair Service of Traffic Safety Barrier, Barricade, and Guardrail Products, and Related Items.**

Vendor Name	Not to Exceed Hourly Labor Rate	Bid Price	Award
Bayer Construction Electrical Contractors, Inc. dba Bayer electric	Not to Exceed hourly labor rate for Installation/Repair Service of Traffic Safety Barrier, Barricade, and Guardrail Products.	$105.00	No
Trinity Hawk Investments, Inc. dba FASTSIGNS 10501	Not to Exceed hourly labor rate for Installation/Repair Service of Traffic Safety Barrier, Barricade, and Guardrail Products.	$225.00	No
Guardrail Safety Services LLC	Not to Exceed hourly labor rate for Installation/Repair Service of Traffic Safety Barrier, Barricade, and Guardrail Products.	$300.00	No
Paradigm Traffic Systems, Inc	Not to Exceed hourly labor rate for Installation/Repair Service of Traffic Safety Barrier, Barricade, and Guardrail Products.	$1,000.00	No

P.O. Box 400, Austin, Texas 78767
800.695.2919 • info@buyboard.com • buyboard.com

Electronic Delivery

Steve Salutric
OMJC Signal Inc
403 Chestnut ST
Waterloo, IA 50703

Welcome to BuyBoard!

Re: *Notice of The Local Government Purchasing Cooperative Contract Award;* Proposal Invitation No. 795-26, Traffic Signal Systems and Safety Barrier Products

Congratulations, The Local Government Purchasing Cooperative (Cooperative) has awarded your company a BuyBoard® contract based on the above-referenced Proposal Invitation. The contract is effective for an initial one-year term of April 1, 2026, through March 31, 2027, and may be subject to two possible one-year renewals. Please refer to the Proposal Invitation for the contract documents, including the General Terms and Conditions of the Contract.

To review the items your company has been awarded, please review Proposal Tabulation No. 795-26 at: www.buyboard.com/vendor. Only items marked as awarded to your company are included in this contract award, and only those awarded items may be sold through the BuyBoard contract. All sales must comply with the contract terms and must be at or below the awarded pricing as set forth in the General Terms and Conditions.

A list of Cooperative members is available on the buyboard.com website. In addition, the BuyBoard Administrator's vendor relations staff is available to assist you in locating available BuyBoard informational resources and answering questions you may have as an awarded BuyBoard vendor.

On behalf of the Cooperative, we appreciate your interest in the Cooperative and we are looking forward to your participation in the program. If you have any questions, feel free to contact me at bids@buyboard.com.

Sincerely,

Victoria Lewis, Bid Analyst
Texas Association of School Boards, Inc.,
Administrator for The Local Government Purchasing Cooperative

Endorsed by:

Electronic Delivery

Steve Salutric
OMJC Signal Inc
403 Chestnut ST
Waterloo, IA 50703

Welcome to BuyBoard!

Re: *Notice of National Purchasing Cooperative Award;* Proposal Invitation No. 795-26, Traffic Signal Systems and Safety Barrier Products

Congratulations, The National Purchasing Cooperative (National Cooperative) has awarded your company a BuyBoard® contract based on the above-referenced Proposal Invitation. The contract is effective for an initial one-year term of April 1, 2026, through March 31, 2027, and may be subject to two possible one-year renewals. Please refer to the Proposal Invitation for the contract documents, including the National Purchasing Cooperative Vendor Award Agreement and General Terms and Conditions of the Contract.

To review the items your company has been awarded, please review Proposal Tabulation No. 795-26 at www.buyboard.com/vendor. Only items marked as awarded to your company are included in this contract award, and only those awarded items may be sold through the BuyBoard contract. All sales must comply with the contract terms and must be at or below the awarded pricing as set forth in the General Terms and Conditions.

A list of National Cooperative members is available on the buyboard.com website. In addition, the BuyBoard Administrator's vendor relations staff is available to assist you in locating available BuyBoard informational resources and answering questions you may have as an awarded BuyBoard vendor.

On behalf of the National Cooperative, we are looking forward to your participation in the program. If you have any questions, feel free to contact me at bids@buyboard.com.

Sincerely,

Victoria Lewis, Bid Analyst
Texas Association of School Boards, Inc.,
Administrator for the National Purchasing Cooperative

P.O. Box 400, Austin, Texas 78767-0400
800.695.2919 • buyboard.com

P.O. Box 400, Austin, Texas 78767
800.695.2919 • bids@buyboard.com • buyboard.com

PROPOSER'S ACCEPTANCE AND AGREEMENT

Proposal Invitation Name Traffic Signal Systems and Safety Barrier Products	**Proposal Due Date/Opening Date and Time** October 30, 2025, at 4:00 PM
Proposal Invitation Number 795-26	**Location of Proposal Opening** Texas Association of School Boards, Inc. BuyBoard Department 12007 Research Blvd. Austin, TX 78759
Contract Term April 1, 2026, through March 31, 2027, with two possible one-year renewals.	**Anticipated Cooperative Board Meeting Date** February 2026

By signature below, the undersigned acknowledges and agrees that you are authorized to submit this Proposal, including making all acknowledgements, consents, and certifications herein, on behalf of Proposer and, to the best of your knowledge, the information provided is true, accurate, and complete.

OMJC SIGNAL INC
Name of Proposing Company

10/29/2025
Date

403 CHESTNUT ST
Street Address

Jennifer Shimp
Signature of Authorized Company Official

WATERLOO, IA. 50703
City, State, Zip

JENNIFER SHIMP
Printed Name of Authorized Company Official

319-236-0200
Telephone Number of Authorized Company Official

PRESIDENT
Position or Title of Authorized Company Official

Fax Number of Authorized Company Official

42-1361699
Federal ID Number

PROPOSAL FORMS PART 1: COMPLIANCE FORMS

INSTRUCTIONS:

Proposer must review and complete all forms in this Proposal Forms Part 1:

- Proposal Acknowledgements
- Felony Conviction Disclosure
- Resident/Nonresident Certification
- Debarment Certification
- Vendor Employment Certification
- No Boycott Verification
- No Excluded Nation or Foreign Terrorist Organization Certification
- Historically Underutilized Business Certification
- Acknowledgement of BuyBoard Technical Requirements
- Construction-Related Goods and Services Affirmation
- Deviation and Compliance
- Vendor Consent for Name Brand Use
- Confidential/Proprietary Information
- EDGAR Vendor Certification
- Compliance Forms Signature Page

An authorized representative of Proposer *must initial in the bottom right corner of each page* where indicated and complete and sign the Compliance Forms Signature Page. Proposer's failure to fully complete, initial, and sign forms as required may result in your Proposal being rejected as non-responsive.

PROPOSAL ACKNOWLEDGEMENTS

The proposing company ("you" or "your") hereby acknowledges and agrees as follows:

1. You have carefully examined and understand all information and documentation associated with this Proposal Invitation, including the Instructions to Proposers, General Information, General Terms and Conditions, attachments/forms, appendices, item specifications, and line items (collectively "Requirements");
2. By your response ("Proposal") to this Proposal Invitation, you propose to supply the products or services submitted at the pricing quoted in your Proposal and in strict compliance with the Requirements, unless specific deviations or exceptions are noted in the Proposal;
3. By your Proposal, you acknowledge and certify all items set forth in the General Terms and Conditions, Section B.12 (Certifications), including all non-collusion certifications and certifications regarding legal, ethical, and other matters set forth therein.
4. Any and all deviations and exceptions to the Requirements have been noted in your Proposal on the required form and no others will be claimed;

Initial: JS

5. If the Cooperative accepts any part of your Proposal and awards you a Contract, you will furnish all awarded products or services at the pricing quoted and in strict compliance with the Requirements (unless specific deviations or exceptions are noted on the required form and accepted by the Cooperative), including without limitation the Requirements related to:
   a. conducting business with Cooperative members, including offering pricing to members that is the best you offer compared to similarly situated customers in similar circumstances;
   b. payment of a service fee in the amount specified and as provided for in this Proposal Invitation;
   c. the **possible** award of a piggy-back contract by the National Purchasing Cooperative or nonprofit entity, in which event you will offer the awarded products and services in accordance with the Requirements; and
   d. submitting price sheets or catalogs in the proper format as required by the Cooperative as a prerequisite to activation of your Contract;
6. You have clearly identified on the included form any information in your Proposal that you believe to be confidential or proprietary or that you do not consider to be public information subject to public disclosure under the Texas Public Information Act or similar public information law;
7. The individual submitting this Proposal is duly authorized to enter into the contractual relationship represented by this Proposal Invitation on your behalf and bind you to the Requirements, and such individual (and any individual signing a form or Proposal document) is authorized and has the requisite knowledge to provide the information and make the representations and certifications required in the Requirements;
8. You have carefully reviewed your Proposal, and certify that all information provided is true, complete, and accurate to the best of your knowledge, and you authorize the Cooperative to take such action as it deems appropriate to verify such information; and
9. Any misstatement, falsification, or omission in your Proposal, whenever or however discovered, will be grounds for disqualifying you from consideration for a contract award under this Proposal Invitation, termination of a contract award, or any other remedy or action provided for in the General Terms and Conditions or by law.

FELONY CONVICTION DISCLOSURE

Subsection (a) of Section 44.034 of the Texas Education Code (Notification of Criminal History of Contractor) states: "A person or business entity that enters into a contract with a school district must give advance notice to the district if the person or an owner or operator has been convicted of a felony. The notice must include a general description of the conduct resulting in the conviction of a felony."

Section 44.034 further states in Subsection (b): "A school district may terminate a contract with a person or business entity if the district determines that the person or business entity failed to give notice as required by Subsection (a) or misrepresented the conduct resulting in the conviction. The district must compensate the person or business entity for services performed before the termination of the contract."

Please check (√) one of the following:

☐ My company is a publicly-held corporation. (Advance notice requirement does not apply to publicly-held corporation.)
☑ My company is not owned or operated by anyone who has been convicted of a felony.
☐ My company is owned/operated by the following individual(s) who has/have been convicted of a felony:

Name of Felon(s): _____

Details of Conviction(s): _____

_____

Initial: JS

RESIDENT/NONRESIDENT CERTIFICATION

Chapter 2252, Subchapter A, of the Texas Government Code establishes certain requirements applicable to proposers who are not Texas residents. Under the statute, a "resident" proposer is a person whose principal place of business is in Texas, including a contractor whose ultimate parent company or majority owner has its principal place of business in Texas. A "nonresident" proposer is a person who is not a Texas resident. Please indicate the status of your company as a "resident" proposer or a "nonresident" proposer under these definitions.

Please check (√) one of the following:

☐ I certify that my company is a **Resident Proposer.**
☑ I certify that my company is a **Nonresident Proposer.**

If your company is a Nonresident Proposer, you must provide the following information for your resident state (the state in which your company's principal place of business is located):

OMJC SIGNAL INC	403 CHESTNUT ST		
Company Name	Address		
Waterloo	IA	50703	
City	State	Zip Code	

A. Does your resident state require a proposer whose principal place of business is in Texas to under-price proposers whose resident state is the same as yours by a prescribed amount or percentage to receive a comparable contract?

☐ Yes ☑ No

B. What is the prescribed amount or percentage? $_____ or _____%

DEBARMENT CERTIFICATION

By signature on the Compliance Forms Signature Page, I certify that neither my company nor an owner or principal of my company has been debarred, suspended or otherwise made ineligible for participation in Federal Assistance programs under Executive Order 12549, "Debarment and Suspension," as described in the Federal Register and Rules and Regulations. Neither my company nor an owner or principal of my company is currently listed on the government-wide exclusions in SAM, debarred, suspended, or otherwise excluded by agencies or declared ineligible under any statutory or regulatory authority. My company agrees to immediately notify the Cooperative and all Cooperative members with pending purchases or seeking to purchase from my company if my company or an owner or principal is later listed on the government-wide exclusions in SAM, or is debarred, suspended, or otherwise excluded by agencies or declared ineligible under any statutory or regulatory authority.

VENDOR EMPLOYMENT CERTIFICATION

Section 44.031(b) of the Texas Education Code establishes certain criteria that a school district must consider when determining to whom to award a contract. Among the criteria for certain contracts is whether the vendor or the vendor's ultimate parent or majority owner (i) has its principal place of business in Texas; or (ii) employs at least 500 people in Texas. If neither your company nor the ultimate parent company or majority owner has its principal place of business in Texas, does your company, ultimate parent company, or majority owner employ at least 500 people in Texas?

Please check (√) one of the following:

☐ Yes ☑ No

Initial: JS

NO BOYCOTT VERIFICATION

A Texas governmental entity may not enter into a contract with a value of $100,000 or more that is to be paid wholly or partly from public funds with a company (excluding a sole proprietorship) that has 10 or more full-time employees for goods or services unless the contract contains a written verification from the company that it: (1) does not boycott Israel and will not boycott Israel during the term of the contract (TEX. GOV'T CODE Ch. 2271), (2) does not boycott energy companies and will not boycott energy companies during the term of the contract (TEX. GOV'T CODE Ch. 2276), and (3) does not have a practice, policy, guidance, or directive that discriminates against a firearm entity or firearm trade association and will not discriminate during the term of the contract against a firearm entity or firearm trade association (TEX. GOV'T CODE Ch. 2274). Accordingly, this certification form is included to the extent required by law.

"Boycott Israel" means refusing to deal with, terminating business activities with, or otherwise taking any action that is intended to penalize, inflict economic harm on, or limit commercial relations specifically with Israel, or with a person or entity doing business in Israel or in an Israeli-controlled territory, but does not include an action made for ordinary business purposes. TEX. GOV'T CODE §808.001(1).

"Boycott energy company" means, without an ordinary business purpose, refusing to deal with, terminating business activities with, or otherwise taking any action that is intended to penalize, inflict economic harm on, or limit commercial relations with a company because the company: (A) engages in the exploration, production, utilization, transportation, sale, or manufacturing of fossil fuel-based energy and does not commit or pledge to meet environmental standards beyond applicable federal and state law; or (B) does business with a company described by Paragraph (A). TEX. GOV'T CODE §809.001(1).

"Discriminate against a firearm entity or firearm trade association" means, (A) with respect to the entity or association, to: (i) refuse to engage in the trade of any goods or services with the entity or association based solely on its status as a firearm entity or firearm trade association; (ii) refrain from continuing an existing business relationship with the entity or association based solely on its status as a firearm entity or firearm trade association; or (iii) terminate an existing business relationship with the entity or association based solely on its status as a firearm entity or firearm trade association; and (B) does not include: (i) the established policies of a merchant, retail seller, or platform that restrict or prohibit the listing or selling of ammunition, firearms, or firearm accessories; and (ii) a company's refusal to engage in the trade of any goods or services, decision to refrain from continuing an existing business relationship, or decision to terminate an existing business relationship: (aa) to comply with federal, state, or local law, policy, or regulations or a directive by a regulatory agency; or (bb) for any traditional business reason that is specific to the customer or potential customer and not based solely on an entity's or association's status as a firearm entity or firearm trade association. TEX. GOV'T CODE §2274.001(3).

By signature on the Compliance Forms Signature Page, to the extent applicable, I certify and verify that Vendor does not boycott Israel, boycott energy companies, or discriminate against a firearm entity or firearm trade association and will not do so during the term of any contract awarded under this Proposal Invitation, that this certification is true, complete and accurate, and that I am authorized by my company to make this certification.

Initial: JS

NO EXCLUDED NATION OR FOREIGN TERRORIST ORGANIZATION CERTIFICATION

Chapter 2252 of the Texas Government Code provides that a Texas governmental entity may not enter into a contract with a company engaged in active business operations with Sudan, Iran, or a foreign terrorist organization – specifically, any company identified on a list prepared and maintained by the Texas Comptroller under Texas Government Code §§806.051, 807.051, or 2252.153. (A company that the U.S. Government affirmatively declares to be excluded from its federal sanctions regime relating to Sudan, Iran, or any federal sanctions regime relating to a foreign terrorist organization is not subject to the contract prohibition.)

By signature on the Compliance Forms Signature Page, I certify and verify that Vendor is not on the Texas Comptroller's list identified above; that this certification is true, complete and accurate; and that I am authorized by my company to make this certification.

HISTORICALLY UNDERUTILIZED BUSINESS CERTIFICATION

A Proposer that has been certified as a Historically Underutilized Business (also known as a Minority/Women Business Enterprise or "MWBE" and all referred to in this form as a "HUB") is encouraged to indicate its HUB certification status when responding to this Proposal Invitation. The BuyBoard website will indicate HUB certifications for awarded Vendors that properly indicate and document their HUB certification on this form. *(Please check (√) all that apply)*

☐ I certify that my company has been certified as a HUB in the following categories:

☐ **Minority Owned Business** ☑ **Women Owned Business**
☐ **Service-Disabled Veteran Owned Business (veteran defined by 38 U.S.C. §101(2), who has a service-connected disability as defined by 38 U.S.C. § 101(16), and who has a disability rating of 20% or more as determined by the U. S. Department of Veterans Affairs or Department of Defense)**

Certification Number: WOSB211809

Name of Certifying Agency: Women's Business Enterprise National Council

☐ My company has **NOT** been certified as a HUB.

ACKNOWLEDGEMENT OF BUYBOARD TECHNICAL REQUIREMENTS

Vendor shall review the BuyBoard Technical Requirements included in this Proposal Invitation. By signature on the Compliance Forms Signature Page, the undersigned affirms that Proposer has obtained a copy of the BuyBoard Technical Requirements, has read and understands the requirements, and certifies that Vendor is able to meet and will comply with those requirements except as follows: *[List and explain BuyBoard Technical Requirements, if any, to which your company **cannot** or will **not** comply.]*

Note: In accordance with the General Terms and Conditions of the Contract, to the extent Vendor is awarded a Contract under this Proposal Invitation but is unable or unwilling to meet the applicable BuyBoard Technical Requirements, the information available on the BuyBoard for Vendor's awarded products or services may be limited, potentially placing Vendor at a disadvantage and impacting the ability of Cooperative members to search, find, review, and purchase Vendor's awarded products and services on the BuyBoard website. Further, to the extent Vendor has acknowledged ability to meet and comply with the BuyBoard Technical Requirements, any subsequent failure or refusal by Vendor to promptly provide information upon request to the Cooperative administrator in accordance with those technical requirements may be deemed an event of default under the Contract.

Initial: JS

CONSTRUCTION-RELATED GOODS AND SERVICES AFFIRMATION

The Cooperative issued the BuyBoard Procurement and Construction-Related Goods and Services Advisory for Texas Members ("Advisory"), which provides information specifically relevant to the procurement of construction-related goods and services by Texas Cooperative members. The Advisory, available at buyboard.com/Vendor/Resources.aspx, provides an overview of certain legal requirements that are potentially relevant to a Cooperative member's procurement of construction or construction-related goods and services, including those for projects that may involve or require architecture, engineering or independent testing services. A copy of the Advisory can also be provided upon request. Because many BuyBoard contracts include goods or installation services that might be considered construction-related, Proposer must make this Construction Related-Goods and Services Affirmation regardless of type of goods or services associated with this Proposal Invitation.

A contract awarded under this Proposal Invitation covers only the specific goods and/or services awarded by the Cooperative. As explained in the Advisory ("Advisory"), **Texas law prohibits the procurement of architecture or engineering services through a purchasing cooperative. This Proposal Invitation and any Contract awarded thereunder does not include such services. Architecture or engineering services must be procured by a Cooperative member separately, in accordance with the Professional Services Procurement Act (Chapter 2254 of the Texas Government Code) and other applicable law and local policy.**

By signature on the Compliance Forms Signature Page, Proposer affirms that Proposer has obtained a copy of the Advisory, has read and understands the Advisory, and is authorized by Proposer to make this affirmation. If Proposer sells construction-related goods or services to a Cooperative member under a Contract awarded under this Proposal Invitation, Proposer will comply with the Advisory and applicable legal requirements, make a good faith effort to make its Cooperative member customers or potential Cooperative member customers aware of such requirements, and provide a Cooperative member with a copy of the Advisory before accepting the member's Purchase Order or other agreement for construction-related goods or services.

Initial: JS

DEVIATION AND COMPLIANCE

If your company intends to deviate from the General Terms and Conditions, Proposal Specifications or other requirements associated with this Proposal Invitation, you MUST list all such deviations on this form, and provide complete and detailed information regarding the deviations on this form or an attachment to this form. **Prior to completing this form, Vendor shall review the General Terms and Conditions section B.4 (Deviations from Item Specifications and General Terms and Conditions). Please note that, as provided in section B.4, certain provisions of the General Terms and Conditions are NOT subject to deviation, and certain deviations will be deemed rejected without further action by the Cooperative. Any attempted deviation, whether directly or indirectly, to provisions identified in this Proposal Invitation as not subject to deviation shall be deemed rejected by the Cooperative and, unless otherwise withdrawn by Vendor, may result in Vendor's Proposal being rejected in its entirety.**

The Cooperative will consider any deviations in its contract award decision and reserves the right to accept or reject a proposal based upon any submitted deviation.

In the absence of any deviation identified and described in accordance with the above, your company must fully comply with the General Terms and Conditions, Proposal Specifications and all other requirements associated with this Proposal Invitation if awarded a Contract under this Proposal Invitation. A deviation will not be effective unless accepted by the Cooperative. The Cooperative, by and through the Cooperative administrator, may, in its sole discretion, seek clarification from and/or communicate with Proposer(s) regarding any submitted deviation, consistent with general procurement principles of fair competition. The Cooperative reserves the right to accept or reject a Proposal based upon any submitted deviation.

Please check (√) one of the following:

☑ **No**; Deviations
☐ **Yes**; Deviations

List and fully explain any deviations you are submitting:

_____

_____

_____

_____

_____

_____

_____

_____

_____

_____

Initial: JS

VENDOR CONSENT FOR NAME BRAND USE

BuyBoard members seeking to make purchases using a Contract awarded under this Proposal Invitation may view information regarding awarded Vendors, including but not limited to product catalogs, pricelists, pricing, and Proposals, through the BuyBoard website. To improve and enhance the experience of BuyBoard members seeking to procure goods and services under the Contract utilizing the BuyBoard website, any Vendor logo, product images, and similar brand and trademark information provided by Vendor for purposes of the Contract ("Vendor Information") may be posted on the BuyBoard website.

You acknowledge that, by submitting your Proposal, unless you specifically opt out below, you consent to use of your company's Vendor Information on the BuyBoard website if awarded a Contract. You further acknowledge that whether, where, and when to include the Vendor Information on the BuyBoard website shall be at the sole discretion of the BuyBoard Administrator. Vendor retains, however, the right of general quality control over the BuyBoard Administrator's authorized display of proprietary Vendor Information. Neither the BuyBoard nor its administrator will be responsible for the use or distribution of Vendor Information by BuyBoard members or any other third party using the BuyBoard website. This Vendor Consent shall be effective for the full term of the Contract, including renewals, unless Vendor provides a signed, written notice revoking consent to contractadmin@buyboard.com. BuyBoard shall have up to thirty days from the date of receipt of a termination or revocation of a Vendor Consent to remove Vendor information from the BuyBoard website.

This Vendor Consent is subject to the Terms and Conditions of the Contract, including, but not limited to, those terms pertaining to Disclaimer of Warranty and Limitation of Liability, Indemnification, and Intellectual Property Infringement.

Vendor logo files must be submitted in one of the formats set forth in the BuyBoard Technical Requirements. Proposers are requested to submit this information with Vendor's Proposal. (This consent shall not authorize use of your company's Vendor Information by BuyBoard if your company is not awarded a Contract.)

OPT OUT:

If your company wishes to opt out of the Vendor Consent for Name Brand Use, you must check the opt out box below. ***DO NOT select this box unless your company is opting out of this Vendor Consent for Name Brand Use.***

☐ By checking this box, Vendor hereby declines to provide consent for use of Vendor Information (as defined herein) on the BuyBoard website. **By opting out, Vendor acknowledges and agrees that, if Vendor is awarded a Contract under this Proposal Invitation, information available on the BuyBoard for Vendor's awarded products or services may be limited, potentially placing Vendor at a disadvantage and impacting the ability of Cooperative members to search, find, review, and purchase Vendor's awarded products and services on the BuyBoard website.**

Initial: JS

CONFIDENTIAL/PROPRIETARY INFORMATION

A. Public Disclosure Laws

All Proposals, forms, documentation, catalogs, pricelists, or other materials submitted by Vendor to the Cooperative in response to this Proposal Invitation, may be subject to the disclosure requirements of the Texas Public Information Act (Texas Government Code chapter 552.001, *et. seq.*) or similar disclosure law. Proposer must clearly identify on this form any information in its Proposal (including forms, documentation, or other materials submitted with the Proposal) that Proposer considers proprietary or confidential. If Proposer fails to properly identify the information, the Cooperative shall have no obligation to notify Vendor or seek protection of such information from public disclosure should a member of the public or other third party request access to the information under the Texas Public Information Act or similar disclosure law. When required by the Texas Public Information Act or other disclosure law, Proposer may be notified of any third-party request for information in a Proposal that Proposer has identified in this form as proprietary or confidential.

Does your Proposal (including forms, documentation, catalogs, pricelists, or other materials submitted with the Proposal) contain information which Vendor considers proprietary or confidential?

Please check (√) one of the following:

☑ **NO**, I certify that none of the information included with this Proposal is considered confidential or proprietary.

☐ **YES**, I certify that this Proposal contains information considered confidential or proprietary and all such information is specifically identified on this form.

If you responded "YES", you must clearly identify below the specific information you consider confidential or proprietary. List each page number, form number, or other information sufficient to make the information readily identifiable. The Cooperative and Cooperative administrator shall not be responsible for a Proposer's failure to clearly identify information considered confidential or proprietary. Further, by submitting a Proposal, Proposer acknowledges that the Cooperative and Cooperative administrator will disclose information when required by law, even if such information has been identified herein as information Vendor considers confidential or proprietary.

Confidential / Proprietary Information:

_____

_____

_____

_____

_____

(Attach additional sheets if needed.)

Initial: JS

B. Copyright Information

Does your Proposal (including forms, documentation, pricelists, catalogs, or other materials submitted with the Proposal) contain copyright information?

Please check (√) one of the following:

☑ **NO,** Proposal (including forms, documentation, pricelists, catalogs, or other materials submitted with the Proposal) does not contain copyright information.

☐ **YES,** Proposal (including forms, documentation, pricelists, catalogs, or other materials submitted with the Proposal) does contain copyright information.

If you responded "YES", clearly identify below the specific documents or pages containing copyright information.

Copyright Information: _____

_____

_____

_____

(Attach additional sheets if needed.)

C. Consent to Release Confidential/Proprietary/Copyright Information to BuyBoard Members

BuyBoard members (Cooperative and nonprofit members) seeking to make purchases through the BuyBoard may wish to view information included in the Proposals of awarded Vendors. If you identified information on this form as confidential, proprietary, or subject to copyright, and you are awarded a BuyBoard contract, your acceptance of the BuyBoard contract award constitutes your consent to the disclosure of such information to BuyBoard members, including posting of such information on the secure BuyBoard website for members. Note: Neither the Cooperative nor Cooperative administrator will be responsible for the use or distribution of information by BuyBoard members or any other party.

D. Consent to Release Proposal Tabulation

Notwithstanding anything in this Confidential/Proprietary Information form to the contrary, by submitting a Proposal, Vendor consents and agrees that, upon Contract award, the Cooperative may publicly release, including posting on the public BuyBoard website, a copy of the proposal tabulation and award information for the Contract including Vendor name; proposed catalog/pricelist name(s); proposed percentage discount(s), hourly labor rate(s), or other specified pricing; and Vendor award or non-award information.

Initial: JS

EDGAR VENDOR CERTIFICATION
(2 CFR Part 200 and Appendix II)

When a Cooperative member seeks to procure goods and services using funds under a federal grant or contract, specific federal laws, regulations, and requirements may apply in addition to those under state law. This includes, but is not limited to, the procurement standards of the Uniform Administrative Requirements, Cost Principles and Audit Requirements for Federal Awards, 2 CFR 200 (sometimes referred to as the "Uniform Guidance" or new "EDGAR"). All Vendors submitting a Proposal must complete this EDGAR Certification Form regarding Vendor's willingness and ability to comply with certain requirements which ***may*** be applicable to specific Cooperative member purchases using federal grant funds. Completed forms will be made available to Cooperative members for their use while considering their purchasing options when using federal grant funds. Cooperative members may also require Vendors to enter into ancillary agreements, in addition to the terms and conditions of the BuyBoard contract, to address the member's specific contractual needs, including contract requirements for a procurement using federal grants or contracts.

For <u>each</u> of the items below, Vendor should certify Vendor's agreement and ability to comply, where applicable, by having Vendor's authorized representative check the applicable boxes, initial each page, and sign the Compliance Forms Signature Page. If you fail to complete any item in this form, the Cooperative will consider and may list the Vendor's response on the BuyBoard as "NO," the Vendor is unable or unwilling to comply. A "NO" response to any of the items may, if applicable, impact the ability of a Cooperative member to purchase from the Vendor using federal funds.

1. Vendor Violation or Breach of Contract Terms:

Contracts for more than the simplified acquisition threshold, which is the inflation adjusted amount determined by the Civilian Agency Acquisition Council and the Defense Acquisition Regulations Council (Councils) as authorized by 41 USC 1908, must address administrative, contractual, or legal remedies in instances where contractors violate or breach contract terms, and provide for such sanctions and penalties as appropriate.

Provisions regarding Vendor default are included in the BuyBoard General Terms and Conditions, including Section E.18, Remedies for Default and Termination of Contract. Any Contract award will be subject to such BuyBoard General Terms and Conditions, as well as any additional terms and conditions in any Purchase Order or Cooperative member ancillary contract agreed upon by Vendor and the Cooperative member which must be consistent with and protect the Cooperative member at least to the same extent as the BuyBoard Terms and Conditions. The remedies under the Contract are in addition to any other remedies that may be available under law or in equity. By submitting a Proposal, you agree to these Vendor violation and breach of contract terms.

☑ **YES**, I agree. ☐ **NO**, I do not agree.

2. Termination for Cause or Convenience:

For any Cooperative member purchase or contract in excess of $10,000 made using federal funds, you agree that the following term and condition shall apply:

The Cooperative member may terminate or cancel any Purchase Order under this Contract at any time, with or without cause, by providing seven (7) business days advance written notice to the Vendor. If this Agreement is terminated in accordance with this Paragraph, the Cooperative member shall only be required to pay Vendor for goods or services delivered to the Cooperative member prior to the termination and not otherwise returned in accordance with Vendor's return policy. If the Cooperative member has paid Vendor for goods or services not yet provided as of the date of termination, Vendor shall immediately refund such payment(s).

If an alternate provision for termination of a Cooperative member purchase for cause and convenience, including the manner by which it will be effected and the basis for settlement, is included in the Cooperative member's Purchase Order or ancillary agreement agreed to by the Vendor, the Cooperative member's provision shall control.

☑ **YES**, I agree. ☐ **NO**, I do not agree. **Initial:** JS

3. Equal Employment Opportunity:

Except as otherwise provided under 41 CFR Part 60, all Cooperative member purchases or contracts that meet the definition of "federally assisted construction contract" in 41 CFR Part 60-1.3 shall be deemed to include the equal opportunity clause provided under 41 CFR 60-1.4(b), in accordance with Executive Order 11246, "Equal Employment Opportunity" (30 FR 12319, 12935, 3 CFR Part, 1964-1965 Comp., p. 339), as amended by Executive Order 11375, "Amending Executive Order 11246 Relating to Equal Employment Opportunity," and implementing regulations at 41 CFR Part 60, "Office of Federal Contract Compliance Programs, Equal Employment Opportunity, Department of Labor."

The equal opportunity clause provided under 41 CFR 60-1.4(b) is hereby incorporated by reference. Vendor agrees that such provision applies to any Cooperative member purchase or contract that meets the definition of "federally assisted construction contract" in 41 CFR Part 60-1.3 and Vendor agrees that it shall comply with such provision.

☑ **YES**, I agree. ☐ **NO**, I do not agree.

4. Davis-Bacon Act:

When required by Federal program legislation, Vendor agrees that, for all Cooperative member prime construction contracts/purchases in excess of $2,000, Vendor shall comply with the Davis-Bacon Act (40 USC 3141-3144, and 3146-3148) as supplemented by Department of Labor regulations (29 CFR Part 5, "Labor Standards Provisions Applicable to Contracts Covering Federally Financed and Assisted Construction"). In accordance with the statute, Vendor is required to pay wages to laborers and mechanics at a rate not less than the prevailing wages specified in a wage determinate made by the Secretary of Labor. In addition, Vendor shall pay wages not less than once a week.

Current prevailing wage determinations issued by the Department of Labor are available at www.sam.gov. Vendor agrees that, for any purchase to which this requirement applies, the award of the purchase to the Vendor is conditioned upon Vendor's acceptance of the wage determination.

Vendor further agrees that it shall also comply with the Copeland "Anti-Kickback" Act (40 USC 3145), as supplemented by Department of Labor regulations (29 CFR Part 3, "Contractors and Subcontractors on Public Building or Public Work Financed in Whole or in Part by Loans or Grants from the United States"). The Act provides that each contractor or subrecipient must be prohibited from inducing, by any means, any person employed in the construction, completion, or repair of public work, to give up any part of the compensation to which he or she is otherwise entitled.

☑ **YES**, I agree. ☐ **NO**, I do not agree.

5. Contract Work Hours and Safety Standards Act:

Where applicable, for all Cooperative member contracts or purchases in excess of $100,000 that involve the employment of mechanics or laborers, Vendor agrees to comply with 40 USC 3702 and 3704, as supplemented by Department of Labor regulations (29 CFR Part 5). Under 40 USC 3702 of the Act, Vendor is required to compute the wages of every mechanic and laborer on the basis of a standard work week of 40 hours. Work in excess of the standard work week is permissible provided that the worker is compensated at a rate of not less than one and a half times the basic rate of pay for all hours worked in excess of 40 hours in the work week.

The requirements of 40 USC 3704 are applicable to construction work and provide that no laborer or mechanic must be required to work in surroundings or under working conditions which are unsanitary, hazardous or dangerous. These requirements do not apply to the purchases of supplies or materials or articles ordinarily available on the open market, or contracts for transportation or transmission of intelligence.

☑ **YES**, I agree. ☐ **NO**, I do not agree.

Initial: JS

6. Right to Inventions Made Under a Contract or Agreement:

If the Cooperative member's Federal award meets the definition of "funding agreement" under 37 CFR 401.2(a) and the recipient or subrecipient wishes to enter into a contract with a small business firm or nonprofit organization regarding the substitution of parties, assignment or performance or experimental, developmental, or research work under that "funding agreement," the recipient or subrecipient must comply with the requirements of 37 CFR Part 401, "Rights to Inventions Made by Nonprofit Organizations and Small Business Firms Under Government Grants, Contracts and Cooperative Agreements," and any implementing regulations issued by the awarding agency.

Vendor agrees to comply with the above requirements when applicable.

☑ **YES**, I agree. ☐ **NO**, I do not agree.

7. Clean Air Act and Federal Water Pollution Control Act:

Clean Air Act (42 USC 7401-7671q.) and the Federal Water Pollution Control Act (33 USC 1251-1387), as amended – Contracts and subgrants of amounts in excess of $150,000 must contain a provision that requires the non-Federal award to agree to comply with all applicable standards, orders, or regulations issued pursuant to the Clean Air Act (42 USC 7401-7671q.) and the Federal Water Pollution Control Act, as amended (33 USC 1251-1387). Violations must be reported to the Federal awarding agency and the Regional Office of the Environmental Protection Agency (EPA).

When required, Vendor agrees to comply with all applicable standards, orders, or regulations issued pursuant to the Clean Air Act and the Federal Water Pollution Control Act.

☑ **YES**, I agree. ☐ **NO**, I do not agree.

8. Debarment and Suspension:

Debarment and Suspension (Executive Orders 12549 and 12689) – A contract award (see 2 CFR 180.220) must not be made to parties listed on the government-wide exclusions in the System for Award Management (SAM), in accordance with the OMB guidelines at 2 CFR 180 that implement Executive Orders 12549 (3 CFR Part 1966 Comp. p. 189) and 12689 (3 CFR Part 1989 Comp. p. 235), "Debarment and Suspension." SAM Exclusions contains the names of parties debarred, suspended, or otherwise excluded by agencies, as well as parties declared ineligible under statutory or regulatory authority other than Executive Order 12549.

Vendor certifies that Vendor is not currently listed on the government-wide exclusions in SAM, is not debarred, suspended, or otherwise excluded by agencies or declared ineligible under statutory or regulatory authority other than Executive Order 12549. Vendor further agrees to immediately notify the Cooperative and all Cooperative members with pending purchases or seeking to purchase from Vendor if Vendor is later listed on the government-wide exclusions in SAM, or is debarred, suspended, or otherwise excluded by agencies or declared ineligible under statutory or regulatory authority other than Executive Order 12549.

☑ **YES**, I agree. ☐ **NO**, I do not agree.

9. Byrd Anti-Lobbying Amendment:

Byrd Anti-Lobbying Amendment (31 USC 1352) - Vendors that apply or bid for an award exceeding $100,000 must file the required certification. Each tier certifies to the tier above that it will not and has not used Federal appropriated funds to pay any person or organization for influencing or attempting to influence an officer or employee of any agency, a member of Congress, officer or employee of Congress, or an employee of a member of Congress in connection with obtaining any Federal contract, grant or any other award covered by 31 USC 1352. Each tier must also disclose any lobbying with non-Federal funds that takes place in connection with obtaining any Federal award. Such disclosures are forwarded from tier to tier up to the non-Federal award. As applicable, Vendor agrees to file all certifications and disclosures required by, and otherwise comply with, the Byrd Anti-Lobbying Amendment (31 USC 1352).

☑ **YES**, I agree. ☐ **NO**, I do not agree.

Initial: JS

10. Procurement of Recovered Materials:

For Cooperative member purchases utilizing Federal funds, Vendor agrees to comply with Section 6002 of the Solid Waste Disposal Act, as amended by the Resource Conservation and Recovery Act where applicable and provide such information and certifications as a Cooperative member may require to confirm estimates and otherwise comply. The requirements of Section 6002 include procuring only items designated in guidelines of the Environmental Protection Agency (EPA) at 40 CFR Part 247 that contain the highest percentage of recovered materials practicable, consistent with maintaining a satisfactory level of competition, where the purchase price of the item exceeds $10,000 or the value of the quantity acquired during the preceding fiscal year exceeded $10,000; procuring solid waste management services in a manner that maximizes energy and resource recovery, and establishing an affirmative procurement program for procurement of recovered materials identified in the EPA guidelines.

☑ **YES**, I agree. ☐ **NO**, I do not agree.

11. Domestic Preferences for Procurements:

Where appropriate and consistent with law, 2 CFR §200.322 contains certain considerations for domestic preferences for procurements which may be applicable to Cooperative members using federal funds. When required by a Cooperative member, Vendor agrees to provide such information or certification as may reasonably be requested by the Cooperative member regarding Vendor's products, including whether goods, products, or materials are produced in the United States.

☑ **YES**, I agree. ☐ **NO**, I do not agree.

12. Prohibition on Certain Telecommunications and Video Surveillance Services or Equipment

2 CFR §200.216 prohibits expending federal loan or grant funds to procure or obtain covered telecommunications equipment or services. To the extent applicable and when required by a Cooperative member, Vendor agrees to provide such information or certification as may reasonably be requested by the Cooperative member to confirm whether any telecommunications equipment or services provided by Vendor is covered telecommunications equipment or services under 2 CFR §200.216.

☑ **YES**, I agree. ☐ **NO**, I do not agree.

13. General Compliance and Cooperation with Cooperative Members:

In addition to the foregoing specific requirements, Vendor agrees, in accepting any Purchase Order from a Cooperative member, it shall make a good faith effort to work with Cooperative members to provide such information and to satisfy such requirements as may apply to a particular Cooperative member purchase or purchases including, but not limited to, applicable recordkeeping and record retention requirements.

☑ **YES**, I agree. ☐ **NO**, I do not agree.

Initial: JS

COMPLIANCE FORMS SIGNATURE PAGE

By initialing pages and by signature below, I certify that I have reviewed the following forms; that the information provided therein is true, complete, and accurate; and that I am authorized by my company to make all certifications, consents, acknowledgements, and agreements contained herein:

- Proposal Acknowledgements
- Felony Conviction Disclosure
- Debarment Certification
- Resident/Nonresident Certification
- Vendor Employment Certification
- No Boycott Verification
- No Excluded Nation or Foreign Terrorist Organization Certification
- Historically Underutilized Business Certification
- Construction-Related Goods and Services Affirmation
- Acknowledgement of BuyBoard Technical Requirements
- Deviation and Compliance
- Vendor Consent for Name Brand Use
- Confidential/Proprietary Information
- EDGAR Vendor Certification

OMJC SIGNAL INC
Company Name

Jennifer Shimp
Signature of Authorized Company Official

JENNIFER SHIMP
Printed Name and Title

10/29/2025
Date

Type text here

P.O. Box 400, Austin, Texas 78767
800.695.2919 • bids@buyboard.com • buyboard.com

VENDOR CONTACT INFORMATION

Vendor shall provide the requested Vendor Contact Information in the electronic proposal submission system including contract, purchase order, RFQ, and invoice contacts (or, if submitting a hard copy Proposal, timely request and complete the Vendor Contact Information form in accordance with the Instructions to Proposers).

FEDERAL AND STATE/PURCHASING COOPERATIVE EXPERIENCE

The Cooperative strives to provide Cooperative members with the best services and products at the best prices available from Vendors with the technical resources and ability to serve Cooperative members. Please respond to the following questions.

1. Provide the dollar value of sales to or through purchasing cooperatives at or based on an established catalog or market price during the previous 12-month period or the last fiscal year: $ $52,210. (The period of the 12-month period is 10/01/2024 / 09/30/2025). In the event that a dollar value is not an appropriate measure of the sales, provide and describe your own measure of the sales of the item(s).
2. By submitting a proposal, you agree that, based on your written discounting policies, the discounts you offer the Cooperative are equal to or better than the best price you offer other purchasing cooperatives for the same items under equivalent circumstances.
3. Provide the information requested below for other purchasing cooperatives for which Proposer currently serves, or in the past has served, as an awarded vendor. Rows should be added to accommodate as many purchasing cooperatives as required.

PURCHASING GROUP	CURRENT VENDOR? (Y/N)	FORMER VENDOR (Y/N)? – IF YES, LIST YEARS AS VENDOR	AWARDED COMMODITY CATEGORY(IES)
1. Federal General Services Administration	N		
2. T-PASS (State of Texas)	N		
3. OMNIA Partners	N		
4. Sourcewell (NJPA)	N		
5. E&I Cooperative	N		
6. Houston-Galveston Area Council (HGAC)	N		
7. Choice Partners	N		
8. The Interlocal Purchasing System (TIPS)	N		
9. Other	N		

☐ **MY COMPANY DOES NOT CURRENTLY HAVE ANY OF THE ABOVE OR SIMILAR TYPE CONTRACTS.**

CURRENT BUYBOARD VENDORS

If you are a current BuyBoard vendor in the same contract category as proposed in this Proposal Invitation, indicate the discount for your current BuyBoard contract and the proposed discount in this Proposal. Explain any difference between your current and proposed discounts.

Current Discount (%): 6% **Proposed Discount (%):** 6%

Explanation: _____

GOVERNMENTAL REFERENCES

For your Proposal to be considered, you must supply a minimum of five (5) individual governmental entity references. The Cooperative may contact any and all references provided as part of the Proposal evaluation. Provide the information requested below, including the existing pricing/discounts you offer each customer. The Cooperative may determine whether pricing/discounts are fair and reasonable by comparing pricing/discounts stated in your Proposal with the pricing/discounts you offer other governmental customers. Attach additional pages if necessary.

	Entity Name	Contact	Phone#	Email Address	Discount	Quantity/ Volume
1.	COSA TX Roads	Dustin Hohensee	325-277-3063	Dustin.Hohensee@cosatx.us	6%	1ia
2.	Iowa St University	Daji Qiao	515-294-2390	Daji@iastate.edu	0%	1
3.	Jackson County Iowa	Jayden Scheckel	563-652-4782	Jceng@jacksoncounty.iowa.gov	5%	1
4.	City of Waterloo Iowa	Tina Schellhorn	319-291-4440	Tina.schellhorn@waterloo-ia.org	5%	1
5.	City of Irvine CA	Daryl Gee	949-591-6862	Dgee@cityofirvine.org	0%	1

Do you ever modify your written policies or standard governmental sales practices as identified in the above chart to give better discounts (lower pricing) than indicated? **YES** ☐ **NO** ☑ If YES, please explain:

_____

_____

_____

COMPANY PROFILE

Information on awarded Cooperative Contracts is available to Cooperative Members on the BuyBoard website. If your company is awarded a Contract under this Proposal Invitation, please provide a brief company description that you would like to have included with your company profile on the BuyBoard website. **Submit your company profile in a separate file, in Word format, with your Proposal**. (Note: Vendor is solely responsible for any content provided for inclusion on the BuyBoard website. The Cooperative reserves the right to exclude or remove any content in its sole discretion, with or without prior notice, including but not limited to any content deemed by the Cooperative to be inappropriate, irrelevant to the Contract, inaccurate, or misleading.)

da

We provide sustainable, cutting edge roadway and pedestrian traffic solutions. We are continually at the forefront of developing technologies which lower power consumption and increase safety, while maximizing your resources.

We manufacture all of our products at our factory in Waterloo, Iowa.
Raw steel is used to build our trailers by our Machinist , and Welders.
In house powder coating allows us to finish the trailer timely and add quality and durability for a longer life span and a better investment of our customers money. None of our processes are outsourced.
Our assembly team finishes our product by adding quality components.
After our traffic signal product is finished it goes through a quality control process to assure that the customer gets a finished product ready to use.

We constantly are investing in research and development to create new products or improve the functionality .

We have onsite technical support 24/7 to assure that our products are operational at all times to increase safety that using our signals provide.

Please visit our website OMJCSignal.Com for more information about our products and company.

P.O. Box 400, Austin, Texas 78767
800.695.2919 • bids@buyboard.com • buyboard.com

TEXAS REGIONAL SERVICE DESIGNATION

This form must be completed in the electronic proposal submission system (or, if submitting a hard copy Proposal, timely request and complete the form in accordance with the Instructions to Proposers).

The Cooperative (referred to as "Texas Cooperative" in this form and in the State Service Designation form) offers vendors the opportunity to service its members throughout the entire State of Texas. In the electronic proposal submission system, you must indicate if you will service Texas Cooperative members statewide or, if you do not plan to service all Texas Cooperative members statewide, you ***must*** indicate the specific regions you will service. If you propose to serve different regions for different products or services included in your Proposal, you must complete and submit a separate Texas Regional Service Designation form for each group of products and clearly indicate the products or services to which the designation applies. **(Additional forms can be obtained by contacting** bids@buyboard.com *at least five (5) business days prior to the Proposal Due Date*.) ***By designating a region or regions, you are certifying that you are authorized and willing to provide the proposed products and services in those regions. Designating regions in which you are either unable or unwilling to provide the specified products and services shall be grounds for either rejection of your Proposal or, if awarded, termination of your Contract.*** Additionally, if you do not plan to service Texas Cooperative members (i.e., if you will service only states other than Texas), *you must so indicate on the form in the electronic proposal submission system.*

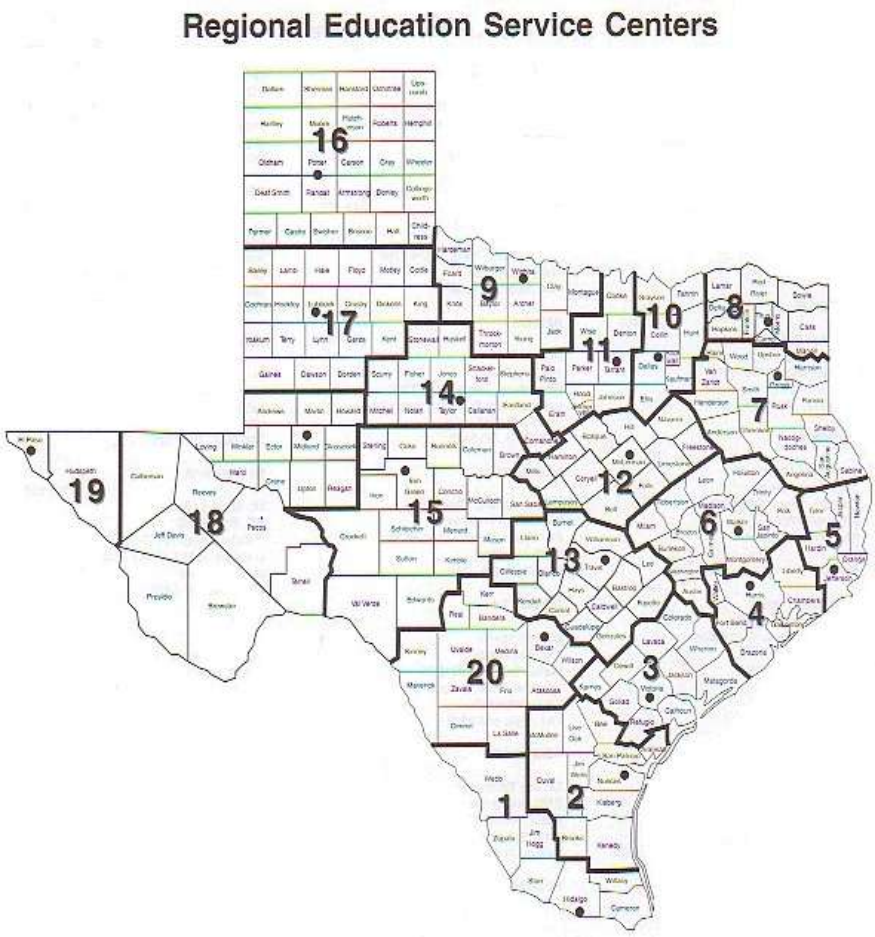

Region and Headquarters

1	Edinburg
2	Corpus Christi
3	Victoria
4	Houston
5	Beaumont
6	Huntsville
7	Kilgore
8	Mount Pleasant
9	Wichita Falls
10	Richardson
11	Fort Worth
12	Waco
13	Austin
14	Abilene
15	San Angelo
16	Amarillo
17	Lubbock
18	Midland
19	El Paso
20	San Antonio

STATE SERVICE DESIGNATION

This form must be completed in the electronic proposal submission system (or, if submitting a hard copy Proposal, timely request and complete the in accordance with the Instructions to Proposers).

As set forth in the Proposal Invitation, it is the Cooperative's intent that other governmental entities in the United States have the opportunity to purchase goods or services awarded under the Contract, subject to applicable state law, through a piggy-back award or similar agreement through the National Purchasing Cooperative BuyBoard. If you plan to service the entire United States or only specific states, *you must complete the State Service Designation information in the electronic proposal submission system. (Note: If you plan to service Texas Cooperative members, be sure that you complete the Texas Regional Service Designation form.)* ***In addition to this form, to be considered for a piggy-back award by the National Purchasing Cooperative, you must have an authorized representative sign the National Purchasing Cooperative Vendor Award Agreement that follows this page.***

If you serve different states for different products or services included in your Proposal, you must complete and submit a separate State Service Designation form for each group of products and clearly indicate the products or services to which the designation applies. **(Additional forms can be obtained by contacting bids@buyboard.com *at least five (5) business days prior to the Proposal Due Date.) By designating a state or states, you are certifying that you are authorized and willing to provide the proposed products and services in those states. Designating states in which you are either unable or unwilling to provide the specified products and services shall be grounds for either rejection of your Proposal or, if awarded, termination of your Contract.***

- I will service all states in the United States.
- I will not service all states in the United States.

Alabama
Alaska
Arizona
Arkansas
California (Public Contract Code 20118 & 20652)
Colorado
Connecticut
Delaware
District of Columbia
Florida
Georgia
Hawaii
Idaho
Illinois
Indiana
Iowa
Kansas
Kentucky
Louisiana
Maine
Maryland
Massachusetts
Michigan
Minnesota
Mississippi
Missouri
Montana
Nebraska
Nevada
New Hampshire
New Jersey
New Mexico
New York
North Carolina
North Dakota
Ohio
Oklahoma
Oregon
Pennsylvania
Rhode Island
South Carolina
South Dakota
Tennessee
Texas
Utah
Vermont
Virginia
Washington
West Virginia
Wisconsin
Wyoming

P.O. Box 400, Austin, Texas 78767
800.695.2919 • bids@buyboard.com • buyboard.com

NATIONAL PURCHASING COOPERATIVE VENDOR AWARD AGREEMENT

In accordance with the Terms and Conditions associated with this Proposal Invitation, a contract awarded under this Proposal Invitation may be "piggy-backed" by another governmental entity. The National Purchasing Cooperative is an intergovernmental purchasing cooperative formed by certain school districts outside of Texas to serve its members throughout the United States. If you agree to be considered for a piggy-back award by the National Purchasing Cooperative, you agree to the following terms and agree to serve National Purchasing Cooperative members in the states you have indicated on the State Service Designation form, in your Proposal.

By signing this form, Proposer (referred to in this Agreement as "Vendor") agrees as follows:

1. Vendor acknowledges that if The Local Government Purchasing Cooperative ("Texas Cooperative") awards Vendor a contract under this Proposal Invitation ("Underlying Award"), the National Purchasing Cooperative ("National Cooperative") may - but is not required to - "piggy-back" on or re-award all or a portion of that Underlying Award ("Piggy-Back Award"). By signing this National Cooperative Vendor Award Agreement ("Agreement"), Vendor accepts and agrees to be bound by any such Piggy-Back Award as provided for herein.

2. In the event National Cooperative awards Vendor a Piggy-Back Award, the National Cooperative Administrator ("BuyBoard Administrator") will notify Vendor in writing of such Piggy-Back Award, which award shall commence on the effective date stated in the Notice and end on the expiration date of the Underlying Award, subject to annual renewals as authorized in writing by the BuyBoard Administrator. Vendor agrees that no further signature or other action is required of Vendor in order for the Piggy-Back Award and this Agreement to be binding upon Vendor. Vendor further agrees that no interlineations or changes to this Agreement by Vendor will be binding on National Cooperative, unless such changes are agreed to by its BuyBoard Administrator in writing.

3. Vendor agrees that it shall offer its goods and services to National Cooperative members at the same pricing and same general terms and conditions, subject to applicable state laws in the state of purchase, as required by the Underlying Award. However, nothing in this Agreement prevents Vendor from offering National Cooperative members better (i.e., lower) competitive pricing and more favorable terms and conditions than those in the Underlying Award.

4. Vendor hereby agrees and confirms that it will serve those states it has designated on the State Service Designation Form of this Proposal Invitation. Any changes to the states designated on the State Service Designation Form must be approved in writing by the BuyBoard Administrator.

5. Vendor agrees to pay National Cooperative the service fee provided for in the Underlying Award based on the amount of purchases generated from National Cooperative members through the Piggy-Back Award. Vendor shall remit payment to National Cooperative on such schedule as it specifies (which shall not be more often than monthly). Further, upon request, Vendor shall provide National Cooperative with copies of all purchase orders generated from National Cooperative members, vendor invoices, and/or such other documentation regarding those purchase orders as the Cooperative's administrators may require in their reasonable discretion for purposes of reviewing and verifying purchase activity. Vendor further agrees that National Cooperative shall have the right, upon reasonable written notice, to review Vendor's records pertaining to purchases made by National Cooperative members in order to verify the accuracy of service fees.

6. Vendor agrees that the Underlying Award, including its General Terms and Conditions, are adopted by reference to the fullest extent such provisions can reasonably apply to the post-proposal/contract award phase. The rights and responsibilities that would ordinarily inure to the Texas Cooperative pursuant to the Underlying Award shall inure to National Cooperative; and, conversely, the rights and responsibilities that would ordinarily inure to Vendor in the Underlying Award shall inure to Vendor in this Agreement. Vendor recognizes and agrees that Vendor and National Cooperative are the only parties to this Agreement, and that nothing in this Agreement has application to other third parties, including the Texas Cooperative. In the event of conflict between this Agreement and the terms of the Underlying Award, the terms of this Agreement shall control, and then only to the extent necessary to reconcile the conflict.

7. This Agreement shall be governed and construed in accordance with the laws of the State of Texas and venue for any dispute shall lie in the federal district court of Travis County, Texas.

8. Vendor acknowledges and agrees that the award of a Piggy-Back Award is within the sole discretion of National Cooperative, and that this Agreement does not take effect unless and until National Cooperative awards Vendor a Piggy-Back Award and the BuyBoard Administrator notifies Vendor in writing of such Piggy-Back Award as provided for herein.

WHEREFORE, by signing below Vendor agrees to the foregoing and warrants that it has the authority to enter into this Agreement.

OMJC SIGNAL INC	795-26
Name of Vendor	Proposal Invitation Number
Jennifer Shimp	JENNIFER SHIMP
Signature of Authorized Company Official	Printed Name of Authorized Company Official

10/29/2025
Date

LOCATION/AUTHORIZED SELLER LISTINGS

If you have more than one location/authorized seller that will service a Contract awarded under this Proposal Invitation, please list each location/authorized seller below. If additional sheets are required, please duplicate this form as necessary. NOTE: Awarded Vendors shall remain responsible for all aspects of the Contract, including processing of Purchase Orders, and shall be responsible for the performance of all locations and authorized sellers under and in accordance with the Contract. ***If you are a product manufacturer and wish to designate Designated Dealers as defined in the General Terms and Conditions to receive Cooperative member Purchase Orders on your behalf, you must complete the Manufacturer Designated Dealer form.***

Location/Authorized Seller Name	**Contact Person**	**Contact Information** (Mailing Address, Phone, Fax, Email)

P.O. Box 400, Austin, Texas 78767
800.695.2919 • bids@buyboard.com • buyboard.com

MANUFACTURER DEALER DESIGNATION

If Vendor is a manufacturer that sells products through a dealer network and wishes to designate a dealer or multiple dealers ("Designated Dealers") to receive Cooperative member Purchase Orders on Vendor's behalf, you must complete this form for each dealer you wish to designate.

Regardless of any Designated Dealers submitted by Vendor, Vendor specifically agrees and acknowledges that any such designations are for Vendor's convenience only and shall not, if Vendor is awarded a Contract, relieve Vendor of any obligations under the Contract, including payment of Cooperative service fees on all Purchase Orders submitted to Vendor or any Designated Dealer. In accordance with the General Terms and Conditions, an awarded Vendor shall remain responsible and liable for all of its obligations under the Contract and the performance of both Vendor and any of Vendor's Designated Dealers under and in accordance with the Contract and remain subject to all remedies for default thereunder, including, but not limited to suspension and termination of Vendor's Contract for nonpayment of service fees.

If awarded, Vendor authorizes the Cooperative, in its sole discretion, to list any Vendor Designated Dealers in the BuyBoard system and to receive Purchase Orders directly from Cooperative members on behalf of Vendor. To the extent a Vendor with Designated Dealers receives a Purchase Order directly, it shall be the responsibility of Vendor to appropriately process such Purchase Order in accordance with the Contract, including but not limited to timely forwarding such Purchase Order to a Designated Dealer for processing.

The Cooperative reserves the right, in its sole discretion, to refuse addition of, or request removal of, any Designated Dealer, and Vendor agrees to immediately require such Designated Dealer to cease accepting Purchase Orders or otherwise acting on Vendor's behalf under the Contract. Further, the Cooperative administrator shall be authorized to remove or suspend any or all Designated Dealers from the BuyBoard at any time in its sole discretion.

If you wish to designate a dealer to service a contract awarded under this Proposal Invitation, please list the Designated Dealer below. If you wish to designate multiple dealers, please duplicate this form as necessary.

Designated Dealer Name

Designated Dealer Contact Person

Designated Dealer Address

City

State

Zip Code

Phone Number

Fax Number

Email address

Designated Dealer Tax ID Number* **(*attach W-9)**

P.O. Box 400, Austin, Texas 78767
800.695.2919 • bids@buyboard.com • buyboard.com

PROPOSAL INVITATION QUESTIONNAIRE

The Cooperative will use your responses to the questions below in evaluating your Proposal and technical and financial resources to provide the goods and perform the services ("Work") under the BuyBoard contract contemplated by this Proposal Invitation ("Contract"). Proposers must fully answer each question, numbering your responses to correspond to the questions/numbers below. Proposers must complete below or attach your responses to this questionnaire and submit in one document with your Proposal. **You must submit the questionnaire and responses with your Proposal or the Proposal will not be considered.**

1. List the number of years Proposer has been in business and former business names (if applicable). Note whether your company is currently for sale or involved in any transaction that would significantly alter its business or result in acquisition by another entity.

40 years. We are not for sale nor involved in any transactions that would significantly alter our business.

2. Describe the resources Proposer has to manage staff and successfully perform the Work contemplated under this Contract. State the number and summarize the experience of company personnel who may be utilized for the Work, including those who will be available to Cooperative members for assistance with project development, technical issues, and product selection for Work associated with this Contract.

We have a structure that supports daily operations of our manufacturing facility. A CEO, President, 3 managers and department leads. We have a high retention rate with 30 employees with years of service from 1 year to 18 years. Our staff is highly skilled. We offer 24/7 technical support. We offer consultation to assist with project development and reviewing project specifications. We have an Research and Development team available also.

3. **Marketing Strategy:** For your Proposal to be considered, you must submit the Marketing Strategy you will use if the Cooperative accepts all or part of your Proposal. *(Example: Explain how your company will initially inform Cooperative members of your BuyBoard Contract, and how you will continue to support the BuyBoard for the duration of the Contract term.)* Attach additional pages if necessary.

We have an extensive email subscriber base that we will inform via our campaigns during the year. We will promote these contracts via targeted, paid and organic listings on search engines and social media.

4. Describe Proposer's financial capability to perform the Contract. State or describe the firm's financial strength and rating, bonding capacity, and insurance coverage limits. State whether the firm, or any of the firm's past or present owners, principal shareholders or stockholders, or officers, have been a debtor party to a bankruptcy, receivership, or insolvency proceeding in the last 7 years, and identify any such debtor party by name and relationship to or position with your firm.

As of September 30, 2025, the Company has stockholders equity of $1,854,594 with a debt to equity ratio of 1.44.

We have never applied for a bond. We have general liability insurance of $1,000,000 with an aggregate of $2,000,000.

No shareholder has been a debtor party to bankruptcy, receivership, or insolvency.

5. Does your company have any outstanding financial judgments and/or is it currently in default on any loan or financing agreement? If so, provide detailed information on the nature of such items and prospects for resolution.

None

6. List all contracts, if any, in the last 10 years on which Proposer has defaulted, failed to complete or deliver the work, or that have been terminated for any reason. For each such contract, provide the project name, scope, value and date and the name of the procuring entity. Fully explain the circumstances of the default, failure to complete or deliver the work, or termination.

None

7. List all litigation or other legal proceedings (including arbitration proceedings), if any, in the last 10 years brought against your firm, or any of the firm's past or present owners, principal shareholders or stockholders, officers, agents or employees, that relate to or arise from a contract similar to this Contract or the Work contemplated under this Contract. Provide the style of the lawsuit or proceeding (name of parties and court or tribunal in which filed), nature of the claim, and resolution or current status.

None

PROPOSAL SPECIFICATION SUMMARY

The categories and items specified for this Proposal Invitation are summarized below. For full Proposal Specifications, you must review and complete the Proposal Specification information in the electronic proposal submission system in accordance with the Instructions to Proposers (or, if submitting a hard copy Proposal, timely request and complete the Proposal Specification Form in accordance with the Instructions to Proposers).

PROPOSAL NOTE: Vendors shall submit catalog(s)/pricelist(s) with their Proposal response or the Proposal will not be considered. Vendors shall submit catalog(s)/pricelist(s) with the Proposal in a readily available and readable electronic format, with Excel or searchable PDF preferred. *No paper catalogs or manufacturer/vendor websites will be accepted.*

Section I: Equipment, Products, and Supplies

1. Discount (%) off catalog/pricelist for **Traffic Light and Signal Systems, Supplies, and Equipment.**
2. Discount (%) off catalog/pricelist for **Traffic Safety Barrier, Barricade, and Guardrail Products** (Cable, Concrete, Plastic, Steel, Wood, W-Beam, Tri-Beam, End Treatments, Posts, and other related products).
3. Discount (%) off catalog/pricelist for **Traffic Intersection Safety** (Parking Lot, Pedestrian, Railroad, School Zone) **Equipment and Products.**
4. Discount (%) off catalog/pricelist for **Traffic Marker and Sign Products.**
5. Discount (%) off catalog/pricelist for **Computerized Traffic Design Plans, Traffic Flagging, and Special Event Services.**
6. Discount (%) off catalog/pricelist for **All Other Traffic Light and Signal System Products.**
7. Discount (%) off catalog/pricelist for **Traffic Light and Signal Systems Repair Parts.**
8. Discount (%) off catalog/pricelist for **Traffic Light and Signal Equipment and Products Maintenance/Warranty Agreements.**

Section II: Installation and Repair Service

9. **Hourly Labor Rate for Installation/Repair Service of Traffic Signal Systems, Products, and Related Items** – **Not to Exceed** hourly labor rate for Installation/Repair Service of Traffic Signal Systems, Equipment, and Products.
10. **Hourly Labor Rate for Installation/Repair Service of Traffic Safety Barrier, Barricade, and Guardrail Products, and Related Items** - **Not to Exceed** hourly labor rate for Installation/Repair Service of Traffic Safety Barrier, Barricade, and Guardrail Products.

P.O. Box 400, Austin, Texas 78767
800.695.2919 • bids@buyboard.com • buyboard.com

REQUIRED FORMS CHECKLIST

(Please check (√) the following)

☐ Reviewed/Completed: **Proposer's Acceptance and Agreement**

PROPOSAL FORMS PART 1: COMPLIANCE FORMS

☐ Reviewed/Completed: **Proposal Acknowledgements**
☐ Reviewed/Completed: **Felony Conviction Disclosure**
☐ Reviewed/Completed: **Resident/Nonresident Certification**
☐ Reviewed/Completed: **Debarment Certification**
☐ Reviewed/Completed: **Vendor Employment Certification**
☐ Reviewed/Completed: **No Boycott Verification**
☐ Reviewed/Completed: **No Excluded Nation or Foreign Terrorist Organization Certification**
☐ Reviewed/Completed: **Historically Underutilized Business Certification**
☐ Reviewed/Completed: **Acknowledgement of BuyBoard Technical Requirements**
☐ Reviewed/Completed: **Construction-Related Goods and Services Affirmation**
☐ Reviewed/Completed: **Deviation and Compliance**
☐ Reviewed/Completed: **Vendor Consent for Name Brand Use**
☐ Reviewed/Completed: **Confidential/Proprietary Information**
☐ Reviewed/Completed: **EDGAR Vendor Certification**
☐ Reviewed/Completed: **Compliance Forms Signature Page**

PROPOSAL FORMS PART 2: VENDOR INFORMATION FORMS

☐ Reviewed/Completed: **Vendor Business Name**
☐ Reviewed/Completed: **Vendor Contact Information** (*complete in electronic proposal submission system)*
☐ Reviewed/Completed: **Federal and State/Purchasing Cooperative Experience**
☐ Reviewed/Completed: **Governmental References**
☐ Reviewed/Completed: **Company Profile**
☐ Reviewed/Completed: **Texas Regional Service Designation** (*complete in electronic proposal submission system)*
☐ Reviewed/Completed: **State Service Designation** (*complete in electronic proposal submission system)*
☐ Reviewed/Completed: **National Purchasing Cooperative Vendor Award Agreement** *(Vendors serving outside Texas only)*
☐ Reviewed/Completed: **Local/Authorized Seller Listings**
☐ Reviewed/Completed: **Manufacturer Dealer Designation**
☐ Reviewed/Completed: **Proposal Invitation Questionnaire**
☐ Reviewed/Completed: **Proposal Specifications** *Discount (%) off Catalog/Pricelist and/or other required pricing information including Catalogs/Pricelists (or no bid response) must be submitted with the Proposal or the Proposal will not be considered.*

OMJC Signal, INC Information

Address: 403 Chestnut St
Waterloo, IA 50702
Phone: (800) 776-5999 x115
Web Address: omjcsignal.com

By submitting your response, you certify that you are authorized to represent and bind your company.

steve salutric
Signature

accounting@omjcsignal.com
Email

Submitted at 10/30/2025 05:19:29 AM (CT)

Requested Attachments

BuyBoard Proposal Invitation No. 795-26, Traffic Signal Systems and Safety Barrier Products

Proposal No. 795-26.pdf

REQUIRED-In PDF format, upload all COMPLETED and FILLED in proposal invitation documents available for download at www.buyboard.com.vendor. Click on the **"Current and Upcoming Proposal Invitations"** button to view and download the forms for this proposal including any additional pages, as necessary. NOTICE: DO NOT complete proposal forms in internet browser. No data will be stored. Download file to computer and complete proposal forms prior to submitting. (**DO NOT** password protect uploaded files.)

Manufacturer Catalog(s) and/or Product Price list(s)

Copy of Buy Board Pricing Calalogue texas 10.29.25.pdf

REQUIRED-In **PDF format ONLY,** upload manufacturer catalog(s) and/or product price list(s) in accordance with proposal invitation instructions. Vendors shall submit catalog(s)/price list(s) with their Proposal response or Proposal will not be considered. No paper catalogs or manufacturer/vendor websites will be accepted. File size must not exceed 250MB. (**DO NOT** password protect uploaded files.)

Exceptions and/or Detailed Information Related to Discount % and/or Hourly Labor Rate Proposed

No response

In PDF format and if necessary, vendor shall attach detailed information regarding exceptions to pricing and/or discount percentage and define the services that are proposed to be provided. NOTE: IF DETAILED INFORMATION IS NOT SUBMITTED, PROPOSAL MAY NOT BE CONSIDERED. (**DO NOT** password protect uploaded files.)

Company Profile

OMJC Company Summary.docx

REQUIRED-Information on awarded Cooperative Contracts is available to Cooperative Members on the BuyBoard website. If your company is awarded a Contract under this Proposal Invitation, please provide a brief company description that you would like to have included with your company profile on the BuyBoard website. Submit your company profile in a separate file, in **Word format**, with your Proposal. *(Note: Vendor is solely responsible for any content provided for inclusion on the BuyBoard website. The Cooperative reserves the right to exclude or remove any content in its sole discretion, with or without prior notice, including but not limited to any content deemed by the Cooperative to be inappropriate, irrelevant to the Contract, inaccurate, or misleading.)* (**DO NOT** password protect uploaded files.)

IRS Form W-9 Request for Taxpayer Identification Number and Certification

W-9 2025.pdf

REQUIRED-In PDF format, upload W-9 form. (**DO NOT** password protect uploaded files.)

Bid Attributes

1 Name of Proposing Company (Legal Name)

By submitting a Proposal, Vendor is seeking to enter into a legal contract with the Cooperative. As such, Vendor must be an individual or legal business entity capable of entering into a binding contract. List the **LEGAL NAME** of the company seeking to contract with the Cooperative. Do **NOT** list an assumed name, dba, aka, etc. here. Such information may be provided below.

OMJC Signal Inc

2 Vendor Business Name

Name by which Vendor, if awarded, wishes to be identified on the BuyBoard. If different than the Name of Proposing Company listed above, only valid trade names (dba, aka, etc.) of the Proposing Company may be used.

OMJC Signal Inc

3 Vendor Mailing/Street Address

Vendor Mailing/Street Address

403 Chestnut St

4 Vendor Mailing/Street Address - City

Vendor Mailing/Street Address - City

Waterloo

5 Vendor Mailing/Street Address - State

Vendor Mailing/Street Address - State (Abbreviate State Name)

IA

6 Vendor Mailing/Street Address - Zip Code

Vendor Mailing/Street Address - Zip Code

50703

7 Federal Identification Number

Federal Identification Number

42-1361699

8 No Boycott Verification/No Excluded Nation or Foreign Terrorist Organization Certification/Historically Underutilized Business Certification

No Boycott Verification/No Excluded Nation or Foreign Terrorist Organization Certification/Historically Underutilized Business Certification

9 **No Boycott Certification**

A Texas governmental entity may not enter into a contract with a value of $100,000 or more that is to be paid wholly or partly from public funds with a company (excluding a sole proprietorship) that has 10 or more full-time employees for goods or services unless the contract contains a written verification from the company that it: (1) does not boycott Israel and will not boycott Israel during the term of the contract (TEX. GOV'T CODE Ch. 2271), (2) does not boycott energy companies and will not boycott energy companies during the term of the contract (TEX. GOV'T CODE Ch. 2276), and (3) does not have a practice, policy, guidance, or directive that discriminates against a firearm entity or firearm trade association and will not discriminate during the term of the contract against a firearm entity or firearm trade association (TEX. GOV'T CODE Ch. 2274). Accordingly, this certification form is included to the extent required by law.
"Boycott Israel" means refusing to deal with, terminating business activities with, or otherwise taking any action that is intended to penalize, inflict economic harm on, or limit commercial relations specifically with Israel, or with a person or entity doing business in Israel or in an Israeli-controlled territory, but does not include an action made for ordinary business purposes. TEX. GOV'T CODE §808.001(1).

"Boycott energy company" means, without an ordinary business purpose, refusing to deal with, terminating business activities with, or otherwise taking any action that is intended to penalize, inflict economic harm on, or limit commercial relations with a company because the company: (A) engages in the exploration, production, utilization, transportation, sale, or manufacturing of fossil fuel-based energy and does not commit or pledge to meet environmental standards beyond applicable federal and state law; or (B) does business with a company described by Paragraph (A). TEX. GOV'T CODE §809.001(1).

"Discriminate against a firearm entity or firearm trade association" means, (A) with respect to the entity or association, to: (i) refuse to engage in the trade of any goods or services with the entity or association based solely on its status as a firearm entity or firearm trade association; (ii) refrain from continuing an existing business relationship with the entity or association based solely on its status as a firearm entity or firearm trade association; or (iii) terminate an existing business relationship with the entity or association based solely on its status as a firearm entity or firearm trade association; and (B) does not include: (i) the established policies of a merchant, retail seller, or platform that restrict or prohibit the listing or selling of ammunition, firearms, or firearm accessories; and (ii) a company's refusal to engage in the trade of any goods or services, decision to refrain from continuing an existing business relationship, or decision to terminate an existing business relationship: (aa) to comply with federal, state, or local law, policy, or regulations or a directive by a regulatory agency; or (bb) for any traditional business reason that is specific to the customer or potential customer and not based solely on an entity's or association's status as a firearm entity or firearm trade association. TEX. GOV'T CODE §2274.001(3).

By signature on the Compliance Forms Signature Page, to the extent applicable, I certify and verify that Vendor does not boycott Israel, boycott energy companies, or discriminate against a firearm entity or firearm trade association and will not do so during the term of any contract awarded under this Proposal Invitation, that this certification is true, complete and accurate, and that I am authorized by my company to make this certification.

Yes

10 **No Excluded Nation or Foreign Terrorist Organization Certification**

Chapter 2252 of the Texas Government Code provides that a Texas governmental entity may not enter into a contract with a company engaged in active business operations with Sudan, Iran, or a foreign terrorist organization – specifically, any company identified on a list prepared and maintained by the Texas Comptroller under Texas Government Code §§806.051, 807.051, or 2252.153. (A company that the U.S. Government affirmatively declares to be excluded from its federal sanctions regime relating to Sudan, Iran, or any federal sanctions regime relating to a foreign terrorist organization is not subject to the contract prohibition.)

By signature on the Compliance Forms Signature Page, I certify and verify that Vendor is not on the Texas Comptroller's list identified above; that this certification is true, complete and accurate; and that I am authorized by my company to make this certification.

Yes

11 **Historically Underutilized Business Certification**

A Proposer that has been certified as a Historically Underutilized Business (also known as a Minority/Women Business Enterprise or “MWBE” and all referred to in this form as a “HUB”) is encouraged to indicate its HUB certification status when responding to this Proposal Invitation. The BuyBoard website will indicate HUB certifications for awarded Vendors that properly indicate and document their HUB certification on this form.

I certify that my company has been certified as a MWBE/HUB in the following categories: *(Please check all that apply)*

12 **Minority Owned Business**

Minority Owned Business

☐ *Minority Owned Business*

13 **Women Owned Business**

Women Owned Business

☑ Women Owned Business

14 **Service-Disabled Veteran Owned Business**

Service-Disabled Veteran Owned Business (veteran defined by 38 U.S.C. §101(2), who has a service-connected disability as defined by 38 U.S.C. § 101(16), and who has a disability rating of 20% or more as determined by the U. S. Department of Veterans Affairs or Department of Defense)

☐ *Service-Disabled Veteran Owned Business*

15 **Certification Number**

Certification Number

WOSB211809

16 **Name of Certifying Agency**

Certifying Agency

Women"s Business Enterprise National Council

17 **Non-MWBE/HUB**

My company has NOT been certified as a MWBE/HUB

☐ *Non-HUB*

18 **Vendor General Contact Information**

Proposal/Contract General Contact Information

19 **Vendor Proposal/Contract Contact - First Name**

Vendor Proposal/Contract Contact - First Name

Steve

20 **Vendor Proposal/Contract Contact - Last Name**

Vendor Proposal/Contract Contact - Last Name

Salutric

21 **Vendor Proposal/Contract Contact E-mail Address**

Vendor Proposal/Contract Contact E-mail Address

accounting@omjcsignal.com

22 **Vendor Proposal/Contract Mailing Address**

Vendor Proposal/Contract Mailing Address

403 Chestnut ST

23 **Vendor Proposal/Contact Mailing Address - City**

Vendor Proposal/Contact Mailing Address - City

Waterloo

24 **Vendor Proposal/Contact Mailing Address - State**

Vendor Proposal/Contact Mailing Address - State (Abbreviate State Name)

IA

25 **Vendor Proposal/Contact Mailing Address - Zip Code**

Vendor Proposal/Contact Mailing Address - Zip Code

50703

26 **Vendor Proposal/Contact Phone Number**

Vendor Proposal/Contact Phone Number (xxx-xxx-xxxx)

319-236-0200

27 **Vendor Proposal/Contact Extension Number**

Vendor Proposal/Contact Extension Number

112

28 **Company Website**

Company Website (www.XXXXX.com)

www.omjcsignal.com

29 **Purchase Orders Contact Information**

All Purchase Orders from Cooperative members will be available through the Internet. Vendors need Internet access and at least one e-mail address so that notification of new orders can be sent to the Internet contact when a new purchase order arrives. An information guide will be provided to Vendors to assist them with retrieving their orders.

Please select options below for receipt of Purchase Orders and provide the requested information:

- I will use the internet to receive Purchase Orders at the following address

Yes

30 **Purchase Order E-mail Address**

Purchase Order E-mail Address

sales@omjcsignal.com

31 **Purchase Order Contact - First Name**

Purchase Order Contact - First Name

Jennifer

32 **Purchase Order Contact - Last Name**

Purchase Order Contact - Last Name

Shimp

33 **Purchase Order Contact Phone Number**

Purchase Order Contact Phone Number (xxx-xxx-xxxx)

319-236-0200

34 **Purchase Order Contact Extension Number**

Purchase Order Contact Extension Number

119

35 **Alternate Purchase Order E-mail Address**

Alternate Purchase Order E-mail Address

accounting@omjcsignal.com

36 **Alternate Purchase Order Contact - First Name**

Alternate Purchase Order Contact - First Name

Steve

37 **Alternate Purchase Order Contact - Last Name**

Alternate Purchase Order Contact - Last Name

Salutric

38 **Alternate Purchase Order Contact Phone Number**

Alternate Purchase Order Contact Phone Number (xxx-xxx-xxxx)

319-236-0200

39 **Alternate Purchase Order Contact Extension Number**

Alternate Purchase Order Contact Extension Number

112

40 **Purchase Orders Contact Information**

All Purchase Orders from Cooperative members will be available through the Internet. Vendors need Internet access and at least one e-mail address so that notification of new orders can be sent to the Internet contact when a new purchase order arrives. An information guide will be provided to Vendors to assist them with retrieving their orders.

Please select options below for receipt of Purchase Orders and provide the requested information:

- Purchase Orders may be received by the Designated Dealer(s) identified on my company's Dealer Designation form as provided to the Cooperative administrator. I understand that my company shall remain responsible for the Contract and the performance of all Designated Dealers under and in accordance with the Contract.

No

41 **Request for Quotes (RFQ)**

Cooperative members will send RFQs to you by e-mail. Please provide e-mail addresses for the receipt of RFQs:

42 **Request for Quote (RFQ) E-mail Address**

Request for Quote (RFQ) E-mail Address

sales@omjcsignal.com

43 **Request for Quote (RFQ) Contact - First Name**

Request for Quote (RFQ) Contact - First Name

Jennifer

44 **Request for Quote (RFQ) Contact - Last Name**

Request for Quote (RFQ) Contact - Last Name

Shimp

45 **Request for Quote (RFQ) Contact Phone Number**

Request for Quote (RFQ) Contact Phone Number (xxx-xxx-xxxx)

319-236-0200

46 **Request for Quote (RFQ) Contact Extension Number**

Request for Quote (RFQ) Contact Extension Number

119

47 **Alternate Request for Quote (RFQ) E-mail Address**

Alternate Request for Quote (RFQ) E-mail Address

accounting@omjcsignal.com

48 **Alternate Request for Quote (RFQ) Contact - First Name**

Alternate Request for Quote (RFQ) Contact - First Name

Steve

49 **Alternate Request for Quote (RFQ) Contact - Last Name**

Alternate Request for Quote (RFQ) Contact - Last Name

Salutric

50 **Alternate Request for Quote (RFQ) Contact Phone Number**

Alternate Request for Quote (RFQ) Contact Phone Number (xxx-xxx-xxxx)

319-236-0200

51 **Alternate Request for Quote (RFQ) Contact Extension Number**

Alternate Request for Quote (RFQ) Contact Extension Number

112

52 **Invoices**

Your company will be billed monthly for the service fee due under a Contract awarded under this Proposal Invitation. **All invoices are available on the BuyBoard website and e-mail notifications will be sent when they are ready to be retrieved**.

53 **Invoices**

Please choose only one (1) of the following options for receipt of invoices and provide the requested information:

(a) Service fee invoices and related communications should be provided directly to my company at:

or

(b) In lieu of my company, I request and authorize all service fee invoices to be provided directly to the following billing agent:

If Vendor authorizes a billing agent to receive and process service fee invoices, in accordance with the General Terms and Conditions of the Contract, Vendor specifically acknowledges and agrees that nothing in that designation shall relieve Vendor of its responsibilities and obligations under the Contract including, but not limited to, payment of all service fees under any Contract awarded Vendor.

Service fee invoices and notices direct to company

54 **Invoice Company Name**

Invoice Company Name

OMJC Signal Inc

55 **Invoice Company Department Name**

Invoice Company Department Name

Accounting

56 **Invoice Contact - First Name**

Invoice Contact - First Name

Steve

57 **Invoice Contact - Last Name**

Invoice Contact - Last Name

Salutric

58 **Invoice Mailing Address**

Invoice Mailing Address (P.O. Box or Street Address)

PO Box 1594

59 **Invoice Mailing Address - City**

Invoice Mailing Address - City

Waterloo

60 **Invoice Mailing Address - State**

Invoice Mailing Address - State (Abbreviate State Name)

IA

61 **Invoice Mailing Address - Zip Code**

Invoice Mailing Address (Zip Code)

50704

62 **Invoice Contact Phone Number**

Invoice Contact Phone Number (xxx-xxx-xxxx)

319-236-0200

63 **Invoice Contact Extension Number**

Invoice Contact Extension Number

112

64 **Invoice Contact Fax Number**

Invoice Contact Fax Number (xxx-xxx-xxxx)

No response

65 **Invoice Contact E-mail Address**

Invoice Contact E-mail

accounting@omjcsignal.com

66 **Invoice Contact Alternate E-mail Address**

Invoice Contact Alternate E-mail Address

sales@omjcsignal.com

67 **Billing Agent Company Name**

Billing Agent Company Name

No response

68 **Billing Agent Department Name**

Billing Agent Department Name

No response

69 **Billing Agent Contact - First Name**

Billing Agent Contact - First Name

No response

70 **Billing Agent Contact - Last Name**

Billing Agent Contact - Last Name

No response

71 **Billing Agent Mailing Address**

Billing Agent Mailing Address (P.O. Box or Street Address)

No response

72 **Billing Agent Mailing Address - City**

Billing Agent Mailing Address - City

No response

73 **Billing Agent Mailing Address - State**

Billing Agent Mailing Address - State (Abbreviate State Name)

No response

74 **Billing Agent Mailing Address - Zip Code**

Billing Agent Mailing Address - Zip Code

No response

75 **Billing Agent Contact Phone Number**

Billing Agent Contact Phone Number (xxx-xxx-xxxx)

No response

76 **Billing Agent Contact Extension Number**

Billing Agent Contact Extension Number

No response

77 **Billing Agent Fax Number**

Billing Agent Fax Number

No response

78 **Billing Agent Contact E-mail Address**

Billing Agent Contact E-mail Address

No response

79 **Billing Agent Alternative E-mail Address**

Billing Agent Alternative E-mail Address

No response

80 **Shipping Via**

Common Carrier, Company Truck, Prepaid and Add to Invoice, or Other

Common Carrier

81 **Payment Terms**

Note: Vendor payment terms must comply with the BuyBoard General Terms and Conditions and the Texas Prompt Payment Act (Texas Government Code Ch. 2251).

Net 30 Days

82 **Vendor's Internal/Assigned Reference/Quote Number**

Vendor's Internal/Assigned Reference/Quote Number

No response

83 **State or Attach Return Policy**

Note: Only return requirements and processes will be deemed part of Vendor's return policy. Any unrelated contract terms, terms of sale, or other information not specifically related to return requirements and processes included in Vendor's return policy shall not apply to any awarded Contract unless specifically included as a deviation in the Deviation and Compliance Form and accepted by the Cooperative.

No response

84 **Electronic Payments**

Are electronic payments acceptable to your company?

Yes

85 **Credit Card Payments**

Are credit card payments acceptable to your company?

No

86 **Texas Regional Service Designation**

Texas Regional Service Designation - Refer to Form in Proposal Invitation

The Cooperative (referred to as “Texas Cooperative” in this form and in the State Service Designation form) offers vendors the opportunity to service its members throughout the entire State of Texas. If you do not plan to service all Texas Cooperative members statewide, you **must** indicate the specific regions you will service on this form. If you propose to serve different regions for different products or services included in your Proposal, you must complete and submit a separate Texas Regional Service Designation form for each group of products and clearly indicate the products or services to which the designation applies. ***By designating a region or regions, you are certifying that you are authorized and willing to provide the proposed products and services in those regions. Designating regions in which you are either unable or unwilling to provide the specified products and services shall be grounds for either rejection of your Proposal or, if awarded, termination of your Contract.*** Additionally, if you do not plan to service Texas Cooperative members (i.e., if you will service only states other than Texas), you must so indicate on this form.

87 **Company Name**

Company Name

OMJC Signal Inc

88 **Texas Regional Service Designation**

Select only one of the following options**.** If you select **"I will NOT serve all Regions of Texas",** you must then check the individual Regions you wish to serve.

I will serve all Regions of Texas

89 **Region 1**

Region 1 - Edinburg

☐ *Region 1*

90 **Region 2**

Region 2 - Corpus Christi

☐ *Region 2*

91 **Region 3**

Region 3 - Victoria

☐ *Region 3*

92 **Region 4**

Region 4 - Houston

☐ *Region 4*

93 **Region 5**

Region 5 - Beaumont

☐ *Region 5*

94 **Region 6**

Region 6 - Huntsville

☐ *Region 6*

95	**Region 7** Region 7 - Kilgore ☐ *Region 7*
96	**Region 8** Region 8 - Mount Pleasant ☐ *Region 8*
97	**Region 9** Region 9 - Wichita Falls ☐ *Region 9*
98	**Region 10** Region 10 - Richardson ☐ *Region 10*
99	**Region 11** Region 11 - Fort Worth ☐ *Region 11*
100	**Region 12** Region 12 - Waco ☐ *Region 12*
101	**Region 13** Region 13 - Austin ☐ *Region 13*
102	**Region 14** Region 14 - Abilene ☐ *Region 14*
103	**Region 15** Region 15 - San Angelo ☐ *Region 15*
104	**Region 16** Region 16 - Amarillo ☐ *Region 16*
105	**Region 17** Region 17 - Lubbock ☐ *Region 17*
106	**Region 18** Region 18 - Midland ☐ *Region 18*

107 **Region 19**

Region 19 - El Paso

☐ *Region 19*

108 **Region 20**

Region 20 - San Antonio

☐ *Region 20*

109 **State Service Designation**

State Service Designation - Refer to Form in Proposal Invitation.

As set forth in the Proposal Invitation, it is the Cooperative's intent that other governmental entities in the United States have the opportunity to purchase goods or services awarded under the Contract, subject to applicable state law, through a piggy-back award or similar agreement through the National Purchasing Cooperative BuyBoard. If you plan to service the entire United States or only specific states, you must complete this form accordingly. *(Note: If you plan to service Texas Cooperative members, be sure that you complete the Texas Regional Service Designation form.)* ***In addition to this form, to be considered for a piggy-back award by the National Purchasing Cooperative, you must have an authorized representative sign the National Purchasing Cooperative Vendor Award Agreement that follows this form.***

If you serve different states for different products or services included in your Proposal, you must complete and submit a separate State Service Designation form for each group of products and clearly indicate the products or services to which the designation applies. *By designating a state or states, you are certifying that you are authorized and willing to provide the proposed products and services in those states. Designating states in which you are either unable or unwilling to provide the specified products and services shall be grounds for either rejection of your Proposal or, if awarded, termination of your Contract.*

110 **Company Name**

Company Name

OMJC Signal Inc

111 **State Service Designation**

Select only one of the following options. If you select "I will NOT serve all States", you must then check the individual States you wish to serve.

I will serve all states in the United States

112 **Alabama**

Alabama

☐ *Alabama*

113 **Alaska**

Alaska

☐ *Alaska*

114 **Arizona**

Arizona

☐ *Arizona*

115 **Arkansas**

Arkansas

☐ *Arkansas*

116	**California** California (Public Contract Code 20118 & 20652) ☐ *California*
117	**Colorado** Colorado ☐ *Colorado*
118	**Connecticut** Connecticut ☐ *Connecticut*
119	**Delaware** Delaware ☐ *Delaware*
120	**District of Columbia** District of Columbia ☐ *District of Columbia*
121	**Florida** Florida ☐ *Florida*
122	**Georgia** Georgia ☐ *Georgia*
123	**Hawaii** Hawaii ☐ *Hawaii*
124	**Idaho** Idaho ☐ *Idaho*
125	**Illinois** Illinois ☐ *Illinois*
126	**Indiana** Indiana ☐ *Indiana*
127	**Iowa** Iowa ☐ *Iowa*

128	**Kansas** Kansas ☐ *Kansas*
129	**Kentucky** Kentucky ☐ *Kentucky*
130	**Louisiana** Louisiana ☐ *Louisiana*
131	**Maine** Maine ☐ *Maine*
132	**Maryland** Maryland ☐ *Maryland*
133	**Massachusetts** Massachusetts ☐ *Massachusetts*
134	**Michigan** Michigan ☐ *Michigan*
135	**Minnesota** Minnesota ☐ *Minnesota*
136	**Mississippi** Mississippi ☐ *Mississippi*
137	**Missouri** Missouri ☐ *Missouri*
138	**Montana** Montana ☐ *Montana*
139	**Nebraska** Nebraska ☐ *Nebraska*

140	**Nevada** Nevada ☐ *Nevada*
141	**New Hampshire** New Hampshire ☐ *New Hampshire*
142	**New Jersey** New Jersey ☐ *New Jersey*
143	**New Mexico** New Mexico ☐ *New Mexico*
144	**New York** New York ☐ *New York*
145	**North Carolina** North Carolina ☐ *North Carolina*
146	**North Dakota** North Dakota ☐ *North Dakota*
147	**Ohio** Ohio ☐ *Ohio*
148	**Oklahoma** Oklahoma ☐ *Oklahoma*
149	**Oregon** Oregon ☐ *Oregon*
150	**Pennsylvania** Pennsylvania ☐ *Pennsylvania*
151	**Rhode Island** Rhode Island ☐ *Rhode Island*

152	**South Carolina** South Carolina ☐ *South Carolina*
153	**South Dakota** South Dakota ☐ *South Dakota*
154	**Tennessee** Tennessee ☐ *Tennessee*
155	**Texas** Texas ☐ *Texas*
156	**Utah** Utah ☐ *Utah*
157	**Vermont** Vermont ☐ *Vermont*
158	**Virginia** Virginia ☐ *Virginia*
159	**Washington** Washington ☐ *Washington*
160	**West Virginia** West Virginia ☐ *West Virginia*
161	**Wisconsin** Wisconsin ☐ *Wisconsin*
162	**Wyoming** Wyoming ☐ *Wyoming*

Bid Lines

1 **Section I: Equipment, Products, and Supplies**

Discount (%) off catalog/price list for **Traffic Light and Signal Systems, Supplies, and Equipment.**
Catalog/Price list MUST be included or proposal will not be considered.

Total: 6%

Item Notes: ***PROPOSAL NOTE***: Vendors shall submit catalog(s)/pricelist(s) with their Proposal response or the Proposal will not be considered. Vendors shall submit catalog(s)/pricelist(s) with the Proposal in a readily available and readable electronic format, with Excel or searchable PDF preferred. **No paper catalogs or manufacturer/ vendor websites will be accepted.**

Vendors proposing multiple manufacturer product lines and/or catalog/price list per line item must submit the information as follows or proposal may not be considered:

- Select **"Add Alternate"** for each additional manufacturer product line and/or catalog/price list proposed
- Vendor's must list one specific percentage discount for each manufacturer and/or catalog/price list listed

Item Attributes

1. State Name of Manufacturer Catalog or Product Price list Proposed with Discount Percentage

NOTE: Do not reference SKU, Reference Numbers, Websites, and/or "See Attached/Enclosed".

OMJC Signal Inc

2 **Section I: Equipment, Products, and Supplies**

Discount (%) off catalog/price list for **Traffic Safety Barrier, Barricade, and Guardrail Products** (Cable, Concrete, Plastic, Steel, Wood, W-Beam, Thri-Beam, End Treatments, Posts, and other related products).
Catalog/Price list MUST be included or proposal will not be considered.

No Bid

Item Notes: ***PROPOSAL NOTE***: Vendors shall submit catalog(s)/pricelist(s) with their Proposal response or the Proposal will not be considered. Vendors shall submit catalog(s)/pricelist(s) with the Proposal in a readily available and readable electronic format, with Excel or searchable PDF preferred. **No paper catalogs or manufacturer/ vendor websites will be accepted.**

Vendors proposing multiple manufacturer product lines and/or catalog/price list per line item must submit the information as follows or proposal may not be considered:

- Select **"Add Alternate"** for each additional manufacturer product line and/or catalog/price list proposed
- Vendor's must list one specific percentage discount for each manufacturer and/or catalog/price list listed

Item Attributes

1. State Name of Manufacturer Catalog or Product Price list Proposed with Discount Percentage

NOTE: Do not reference SKU, Reference Numbers, Websites, and/or "See Attached/Enclosed".

No response

3 **Section I: Equipment, Products, and Supplies**

Discount (%) off catalog/price list for **Traffic Intersection Safety** (Parking Lot, Pedestrian, Railroad, School Zone) **Equipment and Products.** Catalog/Price list MUST be included or proposal will not be considered.

No Bid

Item Notes: ***PROPOSAL NOTE***: Vendors shall submit catalog(s)/pricelist(s) with their Proposal response or the Proposal will not be considered. Vendors shall submit catalog(s)/pricelist(s) with the Proposal in a readily available and readable electronic format, with Excel or searchable PDF preferred. **No paper catalogs or manufacturer/ vendor websites will be accepted.**

Vendors proposing multiple manufacturer product lines and/or catalog/price list per line item must submit the information as follows or proposal may not be considered:

- Select **"Add Alternate"** for each additional manufacturer product line and/or catalog/price list proposed
- Vendor's must list one specific percentage discount for each manufacturer and/or catalog/price list listed

Item Attributes

1. State Name of Manufacturer Catalog or Product Price list Proposed with Discount Percentage

NOTE: Do not reference SKU, Reference Numbers, Websites, and/or "See Attached/Enclosed".

No response

4 **Section I: Equipment, Products, and Supplies**

Discount (%) off catalog/price list for **Traffic Marker and Sign Products.** Catalog/Price list MUST be included or proposal will not be considered.

No Bid

Item Notes: ***PROPOSAL NOTE***: Vendors shall submit catalog(s)/pricelist(s) with their Proposal response or the Proposal will not be considered. Vendors shall submit catalog(s)/pricelist(s) with the Proposal in a readily available and readable electronic format, with Excel or searchable PDF preferred. **No paper catalogs or manufacturer/ vendor websites will be accepted.**

Vendors proposing multiple manufacturer product lines and/or catalog/price list per line item must submit the information as follows or proposal may not be considered:

- Select **"Add Alternate"** for each additional manufacturer product line and/or catalog/price list proposed
- Vendor's must list one specific percentage discount for each manufacturer and/or catalog/price list listed

Item Attributes

1. State Name of Manufacturer Catalog or Product Price list Proposed with Discount Percentage

NOTE: Do not reference SKU, Reference Numbers, Websites, and/or "See Attached/Enclosed".

No response

5 **Section I: Equipment, Products, and Supplies**

Discount (%) off catalog/price list for **Computerized Traffic Design Plans, Traffic Flagging, and Special Event Services.** Catalog/Price list MUST be included or proposal will not be considered.

No Bid

Item Notes: ***PROPOSAL NOTE***: Vendors shall submit catalog(s)/pricelist(s) with their Proposal response or the Proposal will not be considered. Vendors shall submit catalog(s)/pricelist(s) with the Proposal in a readily available and readable electronic format, with Excel or searchable PDF preferred. **No paper catalogs or manufacturer/ vendor websites will be accepted.**

Vendors proposing multiple manufacturer product lines and/or catalog/price list per line item must submit the information as follows or proposal may not be considered:

- Select **"Add Alternate"** for each additional manufacturer product line and/or catalog/price list proposed
- Vendor's must list one specific percentage discount for each manufacturer and/or catalog/price list listed

Item Attributes

1. State Name of Manufacturer Catalog or Product Price list Proposed with Discount Percentage

NOTE: Do not reference SKU, Reference Numbers, Websites, and/or "See Attached/Enclosed".

No response

6 **Section I: Equipment, Products, and Supplies**

Discount (%) off catalog/price list for **All Other Traffic Light and Signal System Products.** Catalog/Price list MUST be included or proposal will not be considered.

No Bid

Item Notes: ***PROPOSAL NOTE***: Vendors shall submit catalog(s)/pricelist(s) with their Proposal response or the Proposal will not be considered. Vendors shall submit catalog(s)/pricelist(s) with the Proposal in a readily available and readable electronic format, with Excel or searchable PDF preferred. **No paper catalogs or manufacturer/ vendor websites will be accepted.**

Vendors proposing multiple manufacturer product lines and/or catalog/price list per line item must submit the information as follows or proposal may not be considered:

- Select **"Add Alternate"** for each additional manufacturer product line and/or catalog/price list proposed
- Vendor's must list one specific percentage discount for each manufacturer and/or catalog/price list listed

Item Attributes

1. State Name of Manufacturer Catalog or Product Price list Proposed with Discount Percentage

NOTE: Do not reference SKU, Reference Numbers, Websites, and/or "See Attached/Enclosed".

No response

7 **Section I: Equipment, Products, and Supplies**

Discount (%) off catalog/price list for **Traffic Light and Signal Systems Repair Parts.** Catalog/Price list MUST be included or proposal will not be considered.

No Bid

Item Notes: ***PROPOSAL NOTE***: Vendors shall submit catalog(s)/pricelist(s) with their Proposal response or the Proposal will not be considered. Vendors shall submit catalog(s)/pricelist(s) with the Proposal in a readily available and readable electronic format, with Excel or searchable PDF preferred. **No paper catalogs or manufacturer/ vendor websites will be accepted.**

Vendors proposing multiple manufacturer product lines and/or catalog/price list per line item must submit the information as follows or proposal may not be considered:

- Select **"Add Alternate"** for each additional manufacturer product line and/or catalog/price list proposed
- Vendor's must list one specific percentage discount for each manufacturer and/or catalog/price list listed

Item Attributes

1. State Name of Manufacturer Catalog or Product Price list Proposed with Discount Percentage

NOTE: Do not reference SKU, Reference Numbers, Websites, and/or "See Attached/Enclosed".

No response

8 **Section I: Equipment, Products, and Supplies**

Discount (%) off catalog/price list for **Traffic Light and Signal Equipment and Products Maintenance/Warranty Agreements.** Catalog/Price list MUST be included or proposal will not be considered.

No Bid

Item Notes: ***PROPOSAL NOTE***: Vendors shall submit catalog(s)/pricelist(s) with their Proposal response or the Proposal will not be considered. Vendors shall submit catalog(s)/pricelist(s) with the Proposal in a readily available and readable electronic format, with Excel or searchable PDF preferred. **No paper catalogs or manufacturer/ vendor websites will be accepted.**

Vendors proposing multiple manufacturer product lines and/or catalog/price list per line item must submit the information as follows or proposal may not be considered:

- Select **"Add Alternate"** for each additional manufacturer product line and/or catalog/price list proposed
- Vendor's must list one specific percentage discount for each manufacturer and/or catalog/price list listed

Item Attributes

1. State Name of Manufacturer Catalog or Product Price list Proposed with Discount Percentage

NOTE: Do not reference SKU, Reference Numbers, Websites, and/or "See Attached/Enclosed".

No response

9 **Section II: Installation and Repair Service**

Hourly Labor Rate for Installation/Repair Service of Traffic Signal Systems, Products, and Related Items – Not to Exceed hourly labor rate for Installation/Repair Service of Traffic Signal Systems, Equipment, and Products.

Quantity: 1 UOM: Hourly Labor Rate Price: $150.00 Total: $150.00

10	**Section II: Installation and Repair Service** **Hourly Labor Rate for Installation/Repair Service of Traffic Safety Barrier, Barricade, and Guardrail Products, and Related Items - Not to Exceed** hourly labor rate for Installation/Repair Service of Traffic Safety Barrier, Barricade, and Guardrail Products. Quantity: 1 UOM: Hourly Labor Rate ***No Bid***

Response Total: $150.00

CITY OF FAYETTEVILLE ARKANSAS

CITY COUNCIL MEMO
2026-1795

MEETING OF JUNE 16, 2026

TO: Mayor Rawn and City Council

THROUGH: Keith Macedo, Chief of Staff

FROM: Tim Nyander, Utilities Director

SUBJECT: **Southern Brothers Construction, LLC - Noland WWTP Switchgear**

RECOMMENDATION:
Staff recommends awarding Bid 26-30 and approving a construction contract with Southern Brothers Construction, LLC in the amount of $1,209,824.00 for construction of an electrical switchgear facility at the Paul R. Noland Water Resource Recovery Facility, and to approve a project contingency in the amount of $120,982.40.

BACKGROUND:
This project will construct a new electrical building at the Paul R. Noland Water Resource Recovery Facility to house high-voltage electrical switchgear equipment controlling global power supply to the entire plant. These improvements will help safeguard this critical facility from loss of power by increasing redundancies, replacing antiquated equipment, simplifying access and maintainability, and will be compatible with future upgrades.

DISCUSSION:
The major electrical equipment has already been procured (Res. 118-25) and is being manufactured. This gear will be received and installed by the contractor for Bid #26-30. On April 30, 2026, the City of Fayetteville accepted sealed competitive bids for this project. Southern Brothers Construction, LLC submitted the lowest bid. All bids are shown here:

Southern Brothers Construction, LLC	$1,209,824.00
Kinco Constructors	$1,410,712.00
Crossland Heavy Contractors, Inc.	$1,625,000.00

Staff recommends awarding Bid 26-30 and approving a construction contract with Southern Brothers Construction, LLC in the amount of $1,209,824.00 for construction of an electrical switchgear facility at the Paul R. Noland Water Resource Recovery Facility. Staff also recommends the approval of a project contingency in the amount of $120,982.40.

BUDGET/STAFF IMPACT:
Funds are available in the WWTP Building Improvements account.

ATTACHMENTS: 3. Staff Review Form, 4. Bid 26-30, Bid Tab - Final, 5. Bid 26-30, Submittal - Southern Brothers Construction - E, Bid 26-30, Agreement (unsigned placeholder), 6. Bid 26-30 Agreement - Signed, 7. Bid 26-30, File #01 - Project Manual, 8. Bid 26-30, File #03 - Addendum 1

113 West Mountain Street
Fayetteville, AR 72701
(479) 575-8323

File #: 2026-1795

A RESOLUTION TO AWARD BID 26-30 AND AUTHORIZE A CONTRACT WITH SOUTHERN BROTHERS CONSTRUCTION, LLC IN THE AMOUNT OF $1,209,824.00 FOR CONSTRUCTION OF AN ELECTRICAL SWITCHGEAR FACILITY AT THE PAUL R. NOLAND WATER RESOURCE RECOVERY FACILITY, AND TO APPROVE A PROJECT CONTINGENCY IN THE AMOUNT OF $120,982.40

WHEREAS, the Utilities Department recommends the construction of a new electrical building at the Paul R. Noland Water Resource Recovery Facility to house high-voltage electrical switchgear equipment, which will help safeguard this critical facility from loss of power by increasing redundancies, replacing antiquated equipment, simplifying access and maintainability, and will be compatible with future upgrades.

NOW, THEREFORE, BE IT RESOLVED BY THE CITY COUNCIL OF THE CITY OF FAYETTEVILLE, ARKANSAS:

Section 1: That the City Council of the City of Fayetteville, Arkansas hereby awards Bid 26-30 and authorizes a contract with Southern Brothers Construction, LLC in the amount of $1,209,824.00 for construction of an electrical switchgear facility at the Paul R. Noland Water Resource Recovery Facility, and further approves a project contingency in the amount of $120,982.40.

City of Fayetteville Staff Review Form

2026-1795

Item ID

6/2/2026

City Council Meeting Date - Agenda Item Only
N/A for Non-Agenda Item

Tim Nyander	5/12/2026	WASTEWATER TREATMENT (730)
Submitted By	**Submitted Date**	**Division / Department**

Action Recommendation:

Staff recommends awarding Bid 26-30 and approving a construction contract with Southern Brothers Construction, LLC in the amount of $1,209,824.00 for construction of an electrical switchgear facility at the Paul R. Noland Water Resource Recovery Facility, and to approve a project contingency in the amount of $120,982.40.

Budget Impact:

5400.730.5800-5804.00	Water & Sewer
Account Number	Fund
02032.1	WWTP Building Improvements
Project Number	Project Title

Budgeted Item?	Yes	Total Amended Budget	$	7,454,066.00
		Expenses (Actual+Encum)	$	5,784,260.05
		Available Budget	$	**1,669,805.95**
Does item have a direct cost?	Yes	Item Cost	$	1,330,806.40
Is a Budget Amendment attached?	No	Budget Amendment	$	-
		Remaining Budget	$	**338,999.55**

Purchase Order Number: _____ **Previous Ordinance or Resolution #** _____

Change Order Number: _____ **Approval Date:** _____

Original Contract Number: _____

Comments:

CITY OF FAYETTEVILLE ARKANSAS

BID TABULATION

Bid 26-30, Construction - Noland WWTF Switchgear

Deadline: Thursday, April 30, 2026 at 2:00 PM

Certification of Funds: $1,200,000 *($1,500,000 maximum allowed)*

				Southern Brothers Construction		Kinco Constructors		Crossland Heavy Contractors, Inc.	
		Total		$1,209,824.00		$1,410,712.00		$1,625,000.00	
Line #	**Description**	**QTY**	**UOM**	**Unit**	**Extended**	**Unit**	**Extended**	**Unit**	**Extended**
1	Mobilization	1	LS	**$42,849.72**	$42,849.72	$56,428.00	$56,428.00	$70,000.00	$70,000.00
2	Bonds & Insurance	1	LS	**$12,482.33**	$12,482.33	$33,798.00	$33,798.00	$20,000.00	$20,000.00
3	Trench & Excavation Safety	1	LS	$7,500.00	$7,500.00	**$1.00**	$1.00	$2,000.00	$2,000.00
4	General Conditions	1	LS	**$56,482.95**	$56,482.95	$104,582.00	$104,582.00	$150,000.00	$150,000.00
5	Construction of Medium Voltage Switchgear Building	1	LS	**$402,323.00**	$402,323.00	$755,151.00	$755,151.00	$1,288,000.00	$1,288,000.00
6	Installation of Medium Voltage Switchgear	1	LS	$675,500.00	$675,500.00	$430,500.00	$430,500.00	**$65,000.00**	$65,000.00
7	Site Restoration	1	LS	**$12,686.00**	$12,686.00	$30,252.00	$30,252.00	$30,000.00	$30,000.00

* NOTICE: Bid award is contingent upon supplier meeting minimum specifications and formal authorization by City Officials.

Trevel Young, Procurement Agent

Kenny Fitch, Sr Procurement Agent

Bid 26-30 Addendum 1
Southern Brothers Construction
Supplier Response

Event Information

Number:	Bid 26-30 Addendum 1
Title:	Construction - Noland WWTF Switchgear
Type:	Invitation to Bid
Issue Date:	4/5/2026
Deadline:	4/30/2026 02:00 PM (CT)
Notes:	The City of Fayetteville is accepting sealed bids from properly licensed contractors to install switchgear at the Noland Wastewater Treatment Facility. Questions regarding this bid should be addressed to Kenny Fitch, Sr. Procurement Agent at kfitch@fayetteville-ar.gov.

Contact Information

Contact:	Kenny Fitch - Sr Procurement Agent
Address:	Procurement City Hall Room 306 113 W. Mountain St. Fayetteville, AR 72701
Phone:	(479) 575-8258
Email:	kfitch@fayetteville-ar.gov

Southern Brothers Construction Information

Contact: Crystal Eubanks
Address: 2156 E Emma
Springdale, AR 72764
Phone: (479) 313-7120 x1
Email: crystal.eubanks@sobroco.com
Web Address: southernbrothersconstruction.com

By submitting your response, you certify that you are authorized to represent and bind your company.

Ben Warren
Signature

ben.warren@sobroco.com
Email

Submitted at 4/30/2026 01:58:20 PM (CT)

Requested Attachments

Signature Forms for Bid 26-30

Noland WWTF Signature Pages.pdf

Please attach your completed forms. These documents can be found in FILE #01 - PROJECT MANUAL in the Attachments tab. Please be sure to include ALL required information stated in the Project Manual.

Bid Bond for Bid 26-30

Noland WWTF Bid Bond.pdf

Please attach a signed and completed copy of your bid bond. The Bid Bond must be signed by both the bidder and the surety company to be considered valid. An invalid Bid Bond shall be grounds for bid rejection.
Bid bonds in the form of a cashier's check shall be delivered to City Hall, Procurement Division before bid deadline and have a copy of the cashier's check uploaded with submittal.

Bid Attributes

1 **Arkansas Secretary of State Filing Number:**

811143594

2 **Arkansas Contractor License Number:**

Contractor's License must have a classification relating to the scope of this project.

3069280327

3 **Check Yes or No:**

Pursuant Arkansas Code Annotated §25-1-503, the Contractor agrees and certifies that they do not currently boycott Israel and will not boycott Israel during any time in which they are entering into, or while in contract, with any public entity as defined in §25-1-503. If at any time during contract the contractor decides to boycott Israel, the contractor must notify the contracted public entity in writing.

☑ Yes, I agree

☐ No, I don't agree

4	**Check Yes or No:** Pursuant Arkansas Code Annotated §25-1-1002, the Contractor agrees and certifies that they do not currently boycott Energy, Fossil Fuel, Firearms, and Ammunition Industries during any time in which they are entering into, or while in contract, with any public entity as defined in §25-1-1002. If at any time during the contract the contractor decides to boycott Energy, Fossil Fuel, Firearms, and/or Ammunition Industries, the contractor must notify the contracted public entity in writing. ☑ Yes, I agree ☐ No, I don't agree

5	**Addendum Acknowledgement:** By selecting "I agree", you acknowledge that you have read and understand any addendums that have been issued for this bid. ☑ I agree

Bid Lines

1	Mobilization (Shall not exceed 5% of total bid price, excluding Bonds & Insurance and Trench & Excavation Safety)	Quantity: 1	UOM: LS	Price:	$42,849.72	Total: $42,849.72
2	Bonds & Insurance	Quantity: 1	UOM: LS	Price:	$12,482.33	Total: $12,482.33
3	Trench & Excavation Safety	Quantity: 1	UOM: LS	Price:	$7,500.00	Total: $7,500.00
4	General Conditions	Quantity: 1	UOM: LS	Price:	$56,482.95	Total: $56,482.95
5	Construction of Medium Voltage Switchgear Building	Quantity: 1	UOM: LS	Price:	$402,323.00	Total: $402,323.00
6	Installation of Medium Voltage Switchgear	Quantity: 1	UOM: LS	Price:	$675,500.00	Total: $675,500.00
7	Site Restoration	Quantity: 1	UOM: LS	Price:	$12,686.00	Total: $12,686.00

Response Total: $1,209,824.00

CITY OF FAYETTEVILLE ARKANSAS

Project Check List

This checklist is for the Bidder's use in preparing & submitting a bid. It is not intended to include all details necessary to prepare a bid and shall not be used as a substitute for the requirements of the bid documents. Use of this checklist does not relieve the Bidder from the responsibility of meeting all requirements of the Specifications concerning the preparation of an acceptable bid. Bidders are welcome to use this form as a coversheet for a sealed envelope; however, using this form itself is NOT a requirement.

☑ **5% Bid Bond of the amount bid accompanied by required documentation (Power of Attorney, etc.)**

- In lieu of a bid bond, the bidder may submit a cashier's check from a bank located in the State of Arkansas for at least five percent (5%) of the amount bid (inclusive of any deductive alternates). Cashier's checks shall be made payable to the City of Fayetteville, AR and received prior to the bid deadline by making an in-person delivery appointment with the City Procurement Division.

☑ All addenda shall be signed, acknowledged, and submitted on the appropriate forms (submitting the actual addendums or marking acknowledgement on other bid pages).

☑ All pages provided with signature lines shall be appropriately signed, dated accordingly, and included with submitted bid documents

☑ All bids shall be received before the stated deadline utilizing the City's electronic bidding platform or submitting a physical sealed bid to the City Procurement Division. Submitting a bid electronically is strongly encouraged. A public bid opening will be conducted shortly after the deadline at City Hall and livestreamed on Zoom. Late or misdirected bids shall not be accepted. The City of Fayetteville shall not be responsible for lost or misdirected bids, or failure of bidder's technical equipment. If submitting a physical bid, all bid documents shall be delivered in a sealed envelope to the address stated in the advertisement or updated deadline issued via Addenda. All bids should be delivered with the name of the bidder (contractor) on the sealed envelope as well as the bidders Arkansas Contractor's License Number.

☑ <u>Additional Information Requested</u>:

- AR Secretary of State Filing #: 811143594 OR submit electronically.
- Arkansas Contractor License #: 3069280327 OR submit electronically.
- SAM Unique Entity Identifier #: SCV4K83VL3L7 OR submit electronically.
- Pursuant Arkansas Code Annotated §25-1-503, the Contractor agrees and certifies that they do not currently boycott Israel and will not boycott Israel during any time in which they are entering into, or while in contract, with any public entity as defined in §25-1-503. If at any time during contract the contractor decides to boycott Israel, the contractor must notify the contracted public entity in writing.
  - Submit electronically or circle applicable answer: YES *or* NO
- Pursuant Arkansas Code Annotated §25-1-1002, the Contractor agrees and certifies that they do not currently boycott Energy, Fossil Fuel, Firearms, and Ammunition Industries during any time in which they are entering into, or while in contract, with any public entity as defined in §25-1-1002. If at any time during the contract the contractor decides to boycott Energy, Fossil Fuel, Firearms, and/or Ammunition Industries, the contractor must notify the contracted public entity in writing.
  - Submit electronically or circle applicable answer: YES *or* NO

SECTION 00140 – BIDDER'S QUALIFICATION STATEMENT

Contract Name: Noland Wastewater Treatment Plant
Switchgear Replacement

Bid 26-30, Construction – Noland WWTF Switchgear

Date: April 30th, 2026

SUBMITTED TO:

The City of Fayetteville, Arkansas

113 West Mountain Street

Fayetteville, Arkansas 72701

SUBMITTED BY:

Company Southern Brothers Construction

Name Ben Warren

Address 2156 E Emma Ave

Principal Office 2156 E Emma Ave

Corporation, LLC, partnership, individual, joint venture, other LLC

Arkansas State General Contractor's License Number 3069280327

(Type or legibly print)

For a Bidder (Contractor) to be considered as Qualified, the Contractor must satisfy all insurance, financial, and bonding requirements of the City of Fayetteville.

The Contactor must also provide documentation with the bid to document:

> The Contractor shall have executed work for municipalities with a minimum of three (3) projects equaling or exceeding two hundred thousand dollars ($200,000) for similar projects. Acceptable documentation of these minimum installations must be submitted to the City of Fayetteville attached to this section.

EXPERIENCE STATEMENT (MANDATORY)

1. Bidder has been engaged as a General Contractor in construction for 8 years and has performed work of the nature and magnitude of this Contract for 8 years. Bidder has been in business under its present name for 8 years.

SECTION 00140 – BIDDER'S QUALIFICATION STATEMENT (continued)

2. Bidder now has the following bonded projects under contract: (On a separate sheet, list project name, owner, name of owner contact, engineer / architect, name of engineer/architect contact, amount of contract, surety, and estimated completion date.) The bidder has no bonded projects under contract

3. Bidder has completed the following (list minimum of 3) contracts consisting of work similar to that proposed by this Contract: (On a separate sheet, list project name, owner, name of owner contact, engineer / architect, name of engineer/architect contact, amount of contract, surety, and date of completion and percentage of the cost of the Work performed with Bidder's own forces.)

4. Has Bidder ever failed to complete any project? If so, state when, where, and why.
Bidder has not Failed to Complete any projects

5. Bidder normally performs the following work with his own forces:
Project Management and Supervision
Site Coordination and Scheduling
Quality Control and Safety Management

6. Construction experience of key individuals in the organization is as follows (continued on attached sheets if needed):
Project Managers - Key Experience in managing multi-million dollar projects.
Superintendents - Field Experience in complex Scheduling, Coordination, and safety
Executive leadership - decades of combined Experience

7. In the event the Contract is awarded to Bidder, the required surety Bonds will be furnished by the following surety company and name and address of agent:
BHC Insurance
5500 Euper Lane
Fort Smith, AR 72913
Suzanne Niedzwiedz

8. Bidder's Workmen's Compensation Experience Modifier Factor is:
0.78

Southern Brothers Construction, LLC
2156 E. Emma
Springdale, AR 72764

TO: City of Fayetteville
Noland Waste Water Treatment Plant
Switchgear Replacement

RE: Bidder Qualification Statement

1. **Fayetteville Transfer Station Improvements**
    a. **City of Fayetteville – Owner**
    b. **Matt Loos – Architect Engineer**
    c. **$271,018 – Contract Amount**
    d. **100% Completed**

2. **Pinnacle Car Club**
    a. **Dozier Capital – Owner**
    b. **Ryan Faust, Buf Studios, Architect**
    c. **$10,545,263 – Contract Amount**
    d. **100% Complete**

3. **Hangars at Thaden Field**
    a. **AEROsuites, LLC – Owner, Paul Cantrell**
    b. **Jared Enman, Engineer, Jorgensen**
    c. **$1,141,106 – Contract Amount**
    d. **100% Complete**

SECTION 00140 – BIDDER'S QUALIFICATION STATEMENT (continued)

Bidder hereby represents and warrants that all statements set forth herein are true and correct.

Date: April 30th, 2026

(OFFICIAL SEAL)

Name of Organization:
Southern Brothers Construction

By Ben Warren
(Type or legibly print)

By Ben Warren
(Signature) SEAL

Title Estimator
(Type or legibly print)

If Bidder is a partnership, the partnership name shall be signed, followed by the signature of at least one of the partners. If Bidder is a corporation or LLC, the corporate name shall be signed, followed by the signature of a duly-authorized officer and with the corporate seal affixed.

Contractor shall attach evidence of authority of signature. If Contractor is a corporation, corporate entity or LLC, Contractor shall attach Corporate Resolution authorizing Contractor's signature and authority to sign.

END OF SECTION 00140

DOCUMENT 00400-BID FORM

Contract Name: Noland Wastewater Treatment Plant Switchgear Replacement

Bid Number: 26-30, Construction – Noland WWTF Switchgear

BID TO:
Owner: City of Fayetteville, Arkansas
113 West Mountain Street
Fayetteville, Arkansas 72701

~~BID FROM:~~
Bidder: Southern Brothers Construction
2156 E Emma Ave
Springdale, AR 72764

ARTICLE 1 – INTENT

1.01 The undersigned Bidder proposes and agrees, if this Bid is accepted, to enter into an agreement with Owner in the Form included in the Contract Documents to perform and furnish all Work as specified or indicated in the Contract Documents for the Bid price and within the Bid time indicated in this Bid and in accordance with the other terms and conditions of the Contract Documents.

ARTICLE 2 – TERMS AND CONDITIONS

2.01 Bidder accepts all of the terms and conditions of the Invitation to Bid and Instructions to Bidders, including without limitation those dealing with the disposition of Bid security. This Bid will remain subject to acceptance for 90 days after the day of Bid opening. Bidder will sign and deliver the required number of counterparts of the Agreement with the Bonds and other documents required by the Bidding Requirements within 15 days after the date of Owner's Notice of Award.

ARTICLE 3 – BIDDERS REPRESENTATIONS

3.01 In submitting this Bid, Bidder represents, as more fully set forth in the Agreement, that:

A. Bidder has examined and carefully studied the Bidding Documents, and the following Addenda, receipt of all which is hereby acknowledged:

Number	Date
Addendum # 01	04/21/26

DOCUMENT 00400-BID FORM (continued)

K. This Bid is genuine and not made in the interest of or on behalf of any undisclosed person, firm, or corporation and is not submitted in conformity with any agreement or rules of any group, association, organization, or corporation; Bidder has not directly or indirectly induced or solicited any other Bidder to submit a false or sham bid; Bidder has not solicited or induced any person, firm, or a corporation to refrain from bidding; and Bidder has not sought by collusion to obtain for himself any advantage over any other Bidder or over Owner.

L. ~~Bidder will perform the Work in compliance with all applicable trench safety standards~~ set forth in Occupational Safety and Health Administration (OSHA) Part 1926 – Subpart P – Excavations.

ARTICLE 4 – BID PRICE

4.01 Bidders are required to provide pricing for all line items.

4.02 The City intends to award this contract to the lowest qualified responsive responsible bidder based on the total base bid as long as the base bid amount falls within the amount of funds certified for the project plus 25%.

4.03 In the even no bid falls within the amount of funds certified for the project plus 25%, all bids shall ~~be rejected and become confidential.~~

4.04 Bidder shall complete the Work in accordance with the Contract Documents for the price(s) indicated in the Bidder's electronic bid submittal. Bidders shall refer to the City's online bidding portal for unit price bid and deductive alternate input.

ARTICLE 5 – CONTRACT TIMES

5.01 Bidder agrees that the Work will be substantially completed and completed and ready for final payment within the number of calendar days indicated in the Agreement.

5.02 Bidder accepts the provisions of the Agreement as to liquidated damages in the event of failure to complete the Work within the times specified in the Agreement

ARTICLE 6 – BID CONTENT

6.01 The following documents are attached to and made a condition of this Bid:

A. Required Bid Security in the form of a cashier's check from a financial institution located in the State of Arkansas or a Bid Bond and in the amount of 5% of value Dollars ($ 5%)

DOCUMENT 00400-BID FORM (continued)

B. A tabulation of Subcontractors and other persons and organizations required to be identified in this Bid.

ARTICLE 7 - COMMUNICATIONS

7.01 Communications concerning this Bid shall be addressed to the Bidder as Follows:

Ben Warren
2156 E Emma Ave
Springdale, AR 72764
Email ben.warren@sobroco.com
Phone No. (972) 273-9966
Fax No. _____

ARTICLE 8 – TERMINOLOGY

8.01 The terms used in the Bid which are defined in the GENERAL CONDITIONS or Instructions to Bidders will have the meanings assigned to them.

ARTICLE 9 – CONTRACTORS ASSURANCES AND EXECUTION/SIGNATURE

9.01 Contractor's Assurances.

As the authorized representative of the individual, incorporation, or corporation (hereinafter referred to as the company) bidding on or participating in the project, I certify that I have read and understand the requirements of the General and/or Supplemental Conditions and that the principles, agents and employees of the company will comply with these requirements including all relevant statutes and regulations issued pursuant thereto. I further certify as the authorized agent of the company that:

EQUAL OPPORTUNITY I will comply with all requirements of 41 CFR Chapter 60 and Executive Orders 11246 and 11375, including inclusion of all required equal opportunity clauses in each sub-contract awarded in excess of $10,000 and I will furnish a similar statement from each proposed sub-contractor, when appropriate. I will also comply with all Equal Employment Opportunity requirements as defined by Section 504 of the Rehabilitation Act of 1975; and Section 13 of the Federal Water Pollution Control Act Amendments of 1972 regarding sex discrimination.

LABOR STANDARDS I will comply with the Labor Standards Provisions contained in the Contract Documents and furnish weekly payrolls and certifications as may be required by the City of Fayetteville to affirm compliance. I will also require that weekly payrolls be submitted to the City of Fayetteville for all subcontracts in excess of $2,000.

DOCUMENT 00400-BID FORM (continued)

9.02 Execution/Signatures for Contractor Assurance above, Bid and Bid Form:

SUBMITTED on April 30th, 20 26

Arkansas State Contractors License No. 30692803 27

If Bidder is:

An Individual

Name (type or printed): _____

By: _____(SEAL)

(Individual's Signature)

Doing business as: _____

Business address: _____

City, State, Zip: _____

Phone No: _____Fax No. _____

Email Address: _____

A Partnership

Partnership Name:_____

By: _____(SEAL)

(Signature of general partner-attach evidence of authority to sign))

Name (type or printed: _____

Business address: _____

City, State, Zip: _____

Phone No: _____Fax No. _____

Email Address: _____

DOCUMENT 00400-BID FORM (continued)

A Corporation or Corporate entity including Limited Liability Company (LLC)

Corporation Name: Southern Brothers Construction, LLC (SEAL)

State of Incorporation: Arkansas

Type (General Business, Professional, Service, Limited Liability):

LLC

By: [signature]

(Signature-attach evidence of authority to sign)

Name (type or printed): Justin Reeves

Title: C.O.O

Attest: [signature]

(Signature of Corporate Secretary)

Business address: 2156 G Emma Ave, Springdale, AR 72764

Phone No: (479) 313-7120 Fax No. _____

Email Address: ben.warren@sobroco.com

Tax ID No.: _____

END OF DOCUMENT 00400

DOCUMENT 00430 – LIST OF SUBCONTRACTORS

In compliance with the Instructions to Bidders and other Contract Documents, the undersigned submits the following names of Subcontractors to be used in performing the Work for:

NOLAND WASTEWATER TREATMENT PLANT SWITCHGEAR REPLACEMENT,
Bid 26-30, Construction – Noland WWTF Switchgear.

Bidder certifies that all Subcontractors listed are eligible to perform the Work.

Subcontractor's Work	Subcontractor's Name and Address	Expected Percentage or Value
Clearing/Earthwork	JAK Consulting 3101 SW I St, Ste 39, Bentonville, AR	3%
SWPPP/Erosion Control	JAK Consulting 3101 SW I St, Ste 39, Bentonville, AR	2%
Concrete	Backus Concrete 2126 S Maestri Rd, Springdale, AR	10%
Masonry	Walker Masonry 14845 Walker Rd, Prairie Grove, AR	20%
Roofing	Harness Roofing, Inc 4185 Treadco Dr, Springdale, AR	10%
Electrical	Midland Industrial 110 N Center St, Elkins, AR	50%
Material Testing	McClelland Engineers 1580 E Stearns St, Fayetteville, AR	5%
Other (designate)		

NOTE: This form must be submitted in accordance with the Instructions to Bidders.

Bidder's Signature

END OF DOCUMENT

5500 Euper Lane
PO Box 3529
Ft. Smith, AR 72913 (479) 452-4000
www.bhca.com

Bid Bond

KNOW ALL MEN BY THESE PRESENTS, that we
(Here insert full name and address or legal title of Contractor)

Southern Brothers Construction, LLC
2156 E Emma Avenue
Springdale, AR 72764

as Principal, hereinafter called the Principal, and
(Here insert full name and address or legal title of Surety)

Swiss Re Corporate Solutions America Insurance Corporation
1200 Main St. Suite 800
Kansas City, MO 64105-2478

a corporation duly organized under the laws of the State of **Missouri**
as Surety, hereinafter called the Surety, are held and firmly bound unto
(Here insert full name and address or legal title of Owner)

City of Fayetteville
113 W. Mountain Street
Fayetteville, AR 72701

as Obligee, hereinafter called the Obligee, in the sum of **FIVE PERCENT OF THE TOTAL AMOUNT BID** Dollars ($ **5%**), for the payment of which sum well and truly to be made, the said Principal and the said Surety, bind ourselves, our heirs, executors, administrators, successors and assigns, jointly and severally, firmly by these presents.

WHEREAS, the Principal has submitted a bid for **Noland Wastewater Treatment Switchgear Replacement**
(Here insert full name, address and description of project)

NOW, THEREFORE, if the Obligee shall accept the bid of the Principal and the Principal shall enter into a Contract with the Obligee in accordance with the terms of such bid, and give such bond or bonds as may be specified in the bidding or Contract Documents with good and sufficient surety for the faithful performance of such Contract and for the prompt payment of labor and material furnished in the prosecution thereof, or in the event of the failure of the Principal to enter such Contract and give such bond or bonds, if the Principal shall pay to the Obligee the difference not to exceed the penalty hereof between the amount specified in said bid and such larger amount for which the Obligee may in good faith contract with another party to perform the Work covered by said bid, then this obligation shall be null and void, otherwise to remain in full force and effect.

Signed and sealed this **30th** day of **April** **2026**

Bob Wann
(Witness)

Southern Brothers Construction, LLC
(Principal) (Seal)

C.O.O. J Reeves
(Title)

Lisa McClure
(Witness)

Swiss Re Corporate Solutions America Insurance Corporation
(Surety)

Suzanne Elizabeth Niedzwiedz
(Title) *(Seal)*

Suzanne Elizabeth Niedzwiedz , Attorney-In-Fact

AIA Document A310™ – 1970. Copyright © 1963 and 1970 by The American Institute of Architects.

SWISS RE CORPORATE SOLUTIONS

SWISS RE CORPORATE SOLUTIONS AMERICA INSURANCE CORPORATION ("SRCSAIC")
SWISS RE CORPORATE SOLUTIONS PREMIER INSURANCE CORPORATION ("SRCSPIC")

GENERAL POWER OF ATTORNEY

KNOW ALL MEN BY THESE PRESENTS, THAT SRCSAIC, a corporation duly organized and existing under laws of the State of Missouri, and having its principal office in the City of Kansas City, Missouri, and SRCSPIC, a corporation organized and existing under the laws of the State of Missouri and having its principal office in the City of Kansas City, Missouri, each does hereby make, constitute, and appoint:

LISA A. McCLURE, MARTY C. CLARK, MARY ANN JUSTICE, SCOTT R. CLARK,

SUZANNE ELIZABETH NIEDZWIEDZ, SHANNON G. SCHMIDLY, ELIZABETH A. SOLOMAN,

PAXTON C. CLARK, JOSHUA D. TRITT, SHANNON C. SCHMIDLY AND JACOB NOLTE JOINTLY OR SEVERALLY

Its true and lawful Attorney(s)-in-Fact, to make, execute, seal and deliver, for and on its behalf and as its act and deed, bonds, consents of surety, or other writings obligatory in the nature of a bond on behalf of each of said Companies, as surety, on contracts of suretyship as are or may be required or permitted by law, regulation, contract or otherwise, provided that no bond or undertaking or contract or suretyship executed under this authority shall exceed the amount of:

TWO HUNDRED MILLION (200,000,000.00) DOLLARS

This Power of Attorney is granted and is signed by facsimile under and by the authority of the following Resolutions adopted by the Boards of Directors of both SRCSAIC and SRCSPIC at meetings duly called and held on the 18th of November 2021:

"RESOLVED, that any two of the President, any Managing Director, any Senior Vice President, any Vice President, the Secretary or any Assistant Secretary be, and each or any of them hereby is, authorized to execute a Power of Attorney qualifying the attorney named in the given Power of Attorney to execute on behalf of the Corporation bonds, undertakings and all contracts of surety, and that each or any of them hereby is authorized to attest to the execution of any such Power of Attorney and to attach therein the seal of the Corporation; and it is

FURTHER RESOLVED, that the signature of such officers and the seal of the Corporation may be affixed to any such Power of Attorney or to any certificate relating thereto by facsimile, and any such Power of Attorney or certificate bearing such facsimile signatures or facsimile seal shall be binding upon the Corporation when so affixed and in the future with regard to any bond, undertaking or contract of surety to which it is attached."

SWISS RE CORPORATE SOLUTIONS AMERICA INSURANCE CORPORATION SEAL 1973 MISSOURI

By _____
David Satory, Senior Vice President of SRCSAIC & Senior Vice President of SRCSPIC

By _____
Gabriel Jacquez, Senior Vice President of SRCSAIC & Senior Vice President of SRCSPIC

SWISS RE CORPORATE SOLUTIONS PREMIER INSURANCE CORPORATION SEAL MISSOURI

IN WITNESS WHEREOF, SRCSAIC and SRCSPIC have caused their official seals to be hereunto affixed, and these presents to be signed by their authorized officers this 26th day of January, 2026.

Swiss Re Corporate Solutions America Insurance Corporation
Swiss Re Corporate Solutions Premier Insurance Corporation

State of Illinois
County of Cook ss

On this 26th day of January, 2026, before me, a Notary Public personally appeared David Satory, Senior Vice President of SRCSAIC and Senior Vice President of SRCSPIC, and Gabriel Jacquez, Senior Vice President of SRCSAIC and Senior Vice President of SRCSPIC, personally known to me, who being by me duly sworn, acknowledged that they signed the above Power of Attorney as officers of and acknowledged said instrument to be the voluntary act and deed of their respective companies.

OFFICIAL SEAL
KAREN M SZWEDA
Notary Public, State of Illinois
Commission No. 978628
My Commission Expires September 26, 2027

Karen M. Szweda, Notary

I, Jeffrey Goldberg, the duly elected Senior Vice President and Assistant Secretary of SRCSAIC and SRCSPIC, do hereby certify that the above and foregoing is a true and correct copy of a Power of Attorney given by said SRCSAIC and SRCSPIC, which is still in full force and effect.

IN WITNESS WHEREOF, I have set my hand and affixed the seals of the Companies this 30th day of April, 20 26.

Jeffrey Goldberg, Senior Vice President &
Assistant Secretary of SRCSAIC & SRCSPIC

SOUTBRO-02 BETHANY

CERTIFICATE OF LIABILITY INSURANCE

DATE (MM/DD/YYYY) 4/30/2026

THIS CERTIFICATE IS ISSUED AS A MATTER OF INFORMATION ONLY AND CONFERS NO RIGHTS UPON THE CERTIFICATE HOLDER. THIS CERTIFICATE DOES NOT AFFIRMATIVELY OR NEGATIVELY AMEND, EXTEND OR ALTER THE COVERAGE AFFORDED BY THE POLICIES BELOW. THIS CERTIFICATE OF INSURANCE DOES NOT CONSTITUTE A CONTRACT BETWEEN THE ISSUING INSURER(S), AUTHORIZED REPRESENTATIVE OR PRODUCER, AND THE CERTIFICATE HOLDER.

IMPORTANT: If the certificate holder is an ADDITIONAL INSURED, the policy(ies) must have ADDITIONAL INSURED provisions or be endorsed. If SUBROGATION IS WAIVED, subject to the terms and conditions of the policy, certain policies may require an endorsement. A statement on this certificate does not confer rights to the certificate holder in lieu of such endorsement(s).

PRODUCER
BHC Insurance
5500 Euper Lane
P.O. Box 3529
Fort Smith, AR 72913-3529

CONTACT NAME: CL Service Team #5 (xt. 0705)
PHONE (A/C, No, Ext): (479) 783-2255 0705 FAX (A/C, No): (479) 484-5185
E-MAIL ADDRESS: BHCservice5@bhca.com

INSURER(S) AFFORDING COVERAGE	NAIC #
INSURER A : Acuity, A Mutual Insurance Company	14184
INSURER B :	
INSURER C :	
INSURER D :	
INSURER E :	
INSURER F :	

INSURED
Southern Brothers Construction, LLC
2156 E Emma Ave
Springdale, AR 72764

COVERAGES **CERTIFICATE NUMBER:** **REVISION NUMBER:**

THIS IS TO CERTIFY THAT THE POLICIES OF INSURANCE LISTED BELOW HAVE BEEN ISSUED TO THE INSURED NAMED ABOVE FOR THE POLICY PERIOD INDICATED. NOTWITHSTANDING ANY REQUIREMENT, TERM OR CONDITION OF ANY CONTRACT OR OTHER DOCUMENT WITH RESPECT TO WHICH THIS CERTIFICATE MAY BE ISSUED OR MAY PERTAIN, THE INSURANCE AFFORDED BY THE POLICIES DESCRIBED HEREIN IS SUBJECT TO ALL THE TERMS, EXCLUSIONS AND CONDITIONS OF SUCH POLICIES. LIMITS SHOWN MAY HAVE BEEN REDUCED BY PAID CLAIMS.

INSR LTR	TYPE OF INSURANCE	ADDL INSD	SUBR WVD	POLICY NUMBER	POLICY EFF (MM/DD/YYYY)	POLICY EXP (MM/DD/YYYY)	LIMITS	
A	X COMMERCIAL GENERAL LIABILITY			FB6510	9/23/2025	9/23/2026	EACH OCCURRENCE	$ 1,000,000
	CLAIMS-MADE X OCCUR						DAMAGE TO RENTED PREMISES (Ea occurrence)	$ 500,000
	X Contractual Liab Inc						MED EXP (Any one person)	$ 10,000
	X XCU Not Excluded						PERSONAL & ADV INJURY	$ 1,000,000
	GEN'L AGGREGATE LIMIT APPLIES PER:						GENERAL AGGREGATE	$ 3,000,000
	POLICY X PRO-JECT LOC						PRODUCTS - COMP/OP AGG	$ 3,000,000
	X OTHER: $1,000 PD Deductible							$
A	AUTOMOBILE LIABILITY			FB6510	9/23/2025	9/23/2026	COMBINED SINGLE LIMIT (Ea accident)	$ 1,000,000
	X ANY AUTO						BODILY INJURY (Per person)	$
	OWNED AUTOS ONLY / SCHEDULED AUTOS						BODILY INJURY (Per accident)	$
	X HIRED AUTOS ONLY / X NON-OWNED AUTOS ONLY						PROPERTY DAMAGE (Per accident)	$
								$
A	UMBRELLA LIAB X OCCUR			FB6510	9/23/2025	9/23/2026	EACH OCCURRENCE	$ 2,000,000
	X EXCESS LIAB CLAIMS-MADE						AGGREGATE	$ 2,000,000
	DED X RETENTION $ 0							$
A	WORKERS COMPENSATION AND EMPLOYERS' LIABILITY	Y/N	N/A	FB6512	9/23/2025	9/23/2026	X PER STATUTE / OTH-ER	
	ANY PROPRIETOR/PARTNER/EXECUTIVE OFFICER/MEMBER EXCLUDED? (Mandatory in NH)	Y					E.L. EACH ACCIDENT	$ 1,000,000
	If yes, describe under DESCRIPTION OF OPERATIONS below						E.L. DISEASE - EA EMPLOYEE	$ 1,000,000
							E.L. DISEASE - POLICY LIMIT	$ 1,000,000
A	Leased/Rented Equip.			FB6510	9/23/2025	9/23/2026	$2,500 Deductible	100,000

DESCRIPTION OF OPERATIONS / LOCATIONS / VEHICLES (ACORD 101, Additional Remarks Schedule, may be attached if more space is required)
RE: Noland Wastewater Treatment Switchgear Replacement, 1400 N Fox Hunter Road, Fayetteville, AR 72701

CERTIFICATE HOLDER
City of Fayetteville
113 W. Mountain Street
Fayetteville, AR 72701

CANCELLATION
SHOULD ANY OF THE ABOVE DESCRIBED POLICIES BE CANCELLED BEFORE THE EXPIRATION DATE THEREOF, NOTICE WILL BE DELIVERED IN ACCORDANCE WITH THE POLICY PROVISIONS.

AUTHORIZED REPRESENTATIVE

© 1988-2015 ACORD CORPORATION. All rights reserved.
The ACORD name and logo are registered marks of ACORD

SECTION 00500 – AGREEMENT BETWEEN OWNER AND CONTRACTOR

Contract Name/Title: Noland Wastewater Treatment Plant Switchgear Replacement
Contract No.: 26-30, Construction – Noland WWTF Switchgear

THIS AGREEMENT is dated as of the _____ day of _____ in the year 20__ by and between The City of Fayetteville, Arkansas and Southern Brothers Construction, LLC (hereinafter called Contractor).

ARTICLE 1 - WORK

1.01 Contractor shall complete all Work as specified or indicated in the Contract Documents. The work under this Agreement includes, but is not limited to:

A. Construction of the Medium Voltage Paralleling Switchgear Building including site paving and restoration.

B. Installation of the pre-purchased Medium Voltage Paralleling Switchgear including unloading and storage as needed.

C. Integration of the Medium Voltage Paralleling Switchgear with the existing electrical distribution system.

1.02 The Contractor agrees to perform the work described in the Contract Documents and comply with the terms therein for the amounts shown in the Bid Proposal.

1.03 Any use of a third party dumpster or roll off container shall be procured from the City of Fayetteville Recycling and Trash Collection Division. Use of a Non-City dumpster or roll off container is not allowed.

1.04 Contractor is responsible for obtaining all applicable permits. The fees for City of Fayetteville (only) issued permits shall be waived.

1.05 The Contract may include work in City of Fayetteville right-of-way, ARDOT (State) right-of-way, railroad right-of-way and in General or Utility Easements.

ARTICLE 2 - ENGINEER

2.01 The Contract Documents have been prepared by Hawkins-Weir Engineers, Inc. Hawkins-Weir Engineers, Inc. assumes all duties and responsibilities, and has the rights and authority assigned to Engineer in connection with completion of the Work in accordance with the Contract Documents.

SECTION 00500 – AGREEMENT BETWEEN OWNER AND CONTRACTOR (continued)

2.02 The City of Fayetteville assumes all duties and responsibilities, and has the rights and authority assigned to The City of Fayetteville as Owner in connection with completion of the Work in accordance with the Contract Documents.

ARTICLE 3 - CONTRACT TIME

3.01 TIME OF THE ESSENCE:

A. All time limits for milestone, if any, Substantial Completion and completion and readiness for final payment as stated in the Contract Documents are of the essence of the Contract.

3.02 DATES FOR COMPLETION AND FINAL PAYMENT:

A. The Work shall be substantially completed within 240 calendar days after the date when the Contract Times commence to run as provided in the GENERAL CONDITIONS, and final completion and ready for final payment within 270 calendar days after the date when the Contract Times commence to run as provided in the GENERAL CONDITIONS.

3.03 LIQUIDATED DAMAGES:

A. Owner and Contractor recognize that time is of the essence of this Agreement and that The City of Fayetteville will suffer financial loss if the Work is not completed within the time specified above, plus any extensions thereof allowed in accordance with the GENERAL CONDITIONS. The parties also recognize the delays, expense, and difficulties involved in proving the actual loss suffered by The City of Fayetteville if the Work is not Substantially Completed on time. Accordingly, instead of requiring any such proof, The City of Fayetteville and Contractor agree that as liquidated damages for delay (but not as a penalty) Contractor shall pay The City of Fayetteville Seven Hundred Fifty Dollars ($750.00) for each calendar day that expires after the time specified above in Paragraph 3.02 for Substantial Completion until the Work is Substantially Complete. After Substantial Completion, if Contractor shall neglect, refuse, or fail to complete the remaining Work within the time specified in Paragraph 3.02 for completion and readiness for final payment or any proper extension thereof granted by The City of Fayetteville, Contractor shall pay The City of Fayetteville Five Hundred Dollars ($500.00) for each calendar day that expires after the time specified for completion and readiness for final payment.

SECTION 00500 – AGREEMENT BETWEEN OWNER AND CONTRACTOR (continued)

ARTICLE 4 - CONTRACT PRICE

4.01 The CITY OF FAYETTEVILLE agrees to pay, and the CONTRACTOR agrees to accept, as full and final compensation for all work done under this agreement, the amount based on the unit prices bid in the Proposal which is hereto attached, for the actual amount accomplished under each pay item, said payments to be made in lawful money of the United States at the time and in the manner set forth in the Specifications.

4.02 As provided in the Contract estimated quantities are not guaranteed, and determinations of actual quantities and classifications are to be made by ENGINEER as provided in the General Conditions. Unit prices have been computed as provided in the Contract Documents.

4.03 Changes, modifications, or amendments in scope, price or fees to this contract shall not be allowed without a prior formal contract amendment approved by the Mayor and the City Council in advance of the change in scope, cost or fees.

1. Further, there shall be no changes to the scope and/or contract documents without prior written approval of the Engineer of Record and the City's designated Professional Engineer.

ARTICLE 5 - PAYMENT PROCEDURES

5.01 SUBMITTAL AND PROCESSING OF PAYMENTS:

A. Contractor shall submit Applications for Payment in accordance with the GENERAL CONDITIONS. Applications for Payment will be processed by Engineer as provided in the GENERAL CONDITIONS.

5.02 PROGRESS PAYMENTS, RETAINAGE:

A. The City of Fayetteville shall make progress payments on account of the Contract Price on the basis of Contractor's Applications for Payment as recommended by Engineer, on or about the 15th day of each month during construction. All such payments will be measured by the schedule of values established in the GENERAL CONDITIONS (and in the case of Unit Price Work based on the number of units completed) or, in the event there is no schedule of values, as provided in the General Requirements.

SECTION 00500 – AGREEMENT BETWEEN OWNER AND CONTRACTOR (continued)

1. Prior to Substantial Completion, progress payments will be made in an amount equal to the percentage indicated below, but, in each case, less the aggregate of payments previously made and less such amounts as Engineer shall determine, or The City of Fayetteville may withhold, in accordance with the GENERAL CONDITIONS.
   a. 95% of Work Completed (with the balance being retainage). If Work has been 50% completed as determined by Engineer, and if the character and progress of the Work have been satisfactory to The City of Fayetteville and Engineer, The City of Fayetteville on recommendation of Engineer, may determine that as long as the character and progress of the Work subsequently remain satisfactory to them, there will be no additional retainage on account of Work subsequently completed, in which case the remaining progress payments prior to Substantial Completion will be an amount equal to 100% of the Work Completed less the aggregate of payments previously made; and
   b. 100% of Equipment and Materials not incorporated in the Work but delivered, suitably stored, and accompanied by documentation satisfactory to The City of Fayetteville as provided in the GENERAL CONDITIONS.

5.03 FINAL PAYMENT:

A. Upon final completion and acceptance of the Work in accordance with the GENERAL CONDITIONS, The City of Fayetteville shall pay the remainder of the Contract Price as recommended by Engineer and as provided in the GENERAL CONDITIONS.

ARTICLE 6 - CONTRACTOR'S REPRESENTATIONS

6.01 In order to induce The City of Fayetteville to enter into this Agreement, Contractor makes the following representations:

A. Contractor has examined and carefully studied the Contract Documents including the Addenda and other related data identified in the Bid Documents.

SECTION 00500 – AGREEMENT BETWEEN OWNER AND CONTRACTOR (continued)

B. Contractor has visited the Site(s) and become familiar with and is satisfied as to the general, local, and Site conditions that may affect cost, progress, performance, and furnishing of the Work.

C. Contractor is familiar with and is satisfied as to all federal, state, and local Laws and Regulations that may affect cost, progress, performance, and furnishing of the Work.

D. Contractor has carefully studied all:

(1) Reports of explorations and tests of subsurface conditions at or contiguous to the Site and all drawings of physical conditions in or relating to existing surface or subsurface structures at or contiguous to the Site; and

(2) Reports and drawings of a Hazardous Environmental Condition, if any, at the Site. Contractor acknowledges that The City of Fayetteville and Engineer do not assume responsibility for the accuracy or completeness of information and data shown or indicated in the Contract Documents with respect to Underground Facilities at or contiguous to the Site.

E. Contractor has obtained and carefully studied (or assumes responsibility of having done so) all such additional supplementary examinations, investigations, explorations, tests, studies, and data concerning conditions (surface, subsurface, and Underground Facilities) at or contiguous to the Site or otherwise which may affect cost, progress, performance, and furnishing of the Work or which relate to any aspect of the means, methods, techniques, sequences, and procedures of construction to be employed by Contractor and safety precautions and programs incident thereto.

F. Contractor does not consider that any additional examinations, investigations, explorations, tests, studies, or data are necessary for the performing and furnishing of the Work at the Contract Price, within the Contract Times, and in accordance with the other terms and conditions of the Contract Documents.

G. Contractor is aware of the general nature of work to be performed by The City of Fayetteville and others at the Site that relates to the Work as indicated in the Contract Documents.

H. Contractor has correlated the information known to Contractor, information and observations obtained from visits to the Site, reports and drawings identified in the

SECTION 00500 – AGREEMENT BETWEEN OWNER AND CONTRACTOR (continued)

Contract Documents, and all additional examinations, investigations, explorations, tests, studies, and data with the Contract Documents.

I. Contractor has given the Purchasing Division written notice of all conflicts, errors, ambiguities, or discrepancies that Contractor has discovered in the Contract Documents and the written resolution thereof by the Purchasing Division is acceptable to Contractor.

J. The Contract Documents are generally sufficient to indicate and convey understanding of all terms and conditions for performance and furnishing of the Work.

ARTICLE 7 - CONTRACT DOCUMENTS

7.01 CONTENTS:

A. The Contract Documents which comprise the entire Agreement between The City of Fayetteville and Contractor concerning the Work consist of the following and may only be amended, modified, or supplemented as provided in this Agreement and in the GENERAL CONDITIONS:

1. This Agreement.
2. Exhibits to this Agreement (enumerated as follows):
   a. Notice to Proceed.
   b. Contractor's Bid.
   c. Documentation submitted by Contractor prior to Notice of Award.
3. Performance, Payment, and other Bonds.
   a. The Performance and Payment Bonds shall be one hundred percent (100%).
   b. The Contractor shall file the Performance, Payment and Warranty Bonds at the Washington County Clerk's office prior to providing a file marked copy of the filed Performance, Payment and Warranty Bonds to the Owner or Engineer.
4. General Conditions.
5. Supplementary Conditions.

SECTION 00500 – AGREEMENT BETWEEN OWNER AND CONTRACTOR (continued)

6. Specifications consisting of divisions and sections as listed in Table of Contents of Project Manual.
7. Drawings consisting of a cover sheet and sheets as listed in the Table of Contents thereof (Drawings), with each sheet bearing the following general title:

   Paul Noland Wastewater Treatment Plant Paralleling Switchgear Replacement

8. Addenda numbers _____ inclusive.
9. The following which may be delivered or issued after the Effective Date of the Agreement and are not attached hereto: All Written Amendments and other documents amending, modifying, or supplementing the Contract Documents pursuant to the GENERAL CONDITIONS.

ARTICLE 8 - MISCELLANEOUS

8.01 TERMS:

A. Terms used in this Agreement which are defined in the GENERAL CONDITIONS shall have the meanings stated in the GENERAL CONDITIONS.

8.02 ASSIGNMENT OF CONTRACT:

A. No assignment by a party hereto of any rights under or interests in the Contract Documents will be binding on another party hereto without the written consent of the party sought to be bound; and specifically but without limitation, moneys that may become due and moneys that are due may not be assigned without such consent (except to the extent that the effect of this restriction may be limited by Law), and unless specifically stated to the contrary in any written consent to an assignment, no assignment will release or discharge the assignor from any duty or responsibility under the Contract Documents.

8.03 SUCCESSORS AND ASSIGNS:

A. The City of Fayetteville and Contractor each binds himself, his partners, successors, assigns, and legal representatives to the other party hereto, its partners, successors, assigns, and legal representatives in respect to all covenants, agreements, and obligations contained in the Contract Documents.

SECTION 00500 – AGREEMENT BETWEEN OWNER AND CONTRACTOR (continued)

8.04 SEVERABILITY:

A. Any provision or part of the Contract Documents held to be void or unenforceable under any Law or Regulation shall be deemed stricken, and all remaining provisions shall continue to be valid and binding upon The City of Fayetteville and Contractor, who agree that the Contract Documents shall be reformed to replace such stricken provision or part thereof with a valid and enforceable provision that comes as close as possible to expressing the intention of the stricken provision.

8.05 FREEDOM OF INFORMATION ACT:

A. City contracts and documents prepared while performing city contractual work are subject to the Arkansas Freedom of Information Act. If a Freedom of Information Act request is presented to the City of Fayetteville, the contractor will do everything possible to provide the documents in a prompt and timely manner as prescribed in the Arkansas Freedom of Information Act (A.C.A. §25-19-101 et. seq.). Only legally authorized photocopying costs pursuant to the FOIA may be assessed for this compliance.

8.06 LIENS:

A. **No liens against this construction project are allowed.** Arkansas law (A.C.A. §§18-44-501 through 508) prohibits the filing of any mechanics of materialmen's liens in relation to this public construction project. Arkansas law requires and the contractor promises to provide and file with the Circuit Clerk of Washington County a bond in a sum equal to the amount of this contract. Any subcontractor or materials supplier may bring an action for non-payment or labor or material on the bond. The contractor promises to notify every subcontractor and materials supplier for this project of this paragraph and obtain their written acknowledgement of such notice prior to commencement of the work of the subcontractor or materials supplier.

IN WITNESS WHEREOF, The City of Fayetteville and Contractor have signed this Agreement in quadruplicate. One counterpart each has been delivered to Contractor. Three counterparts each has been retained by The City of Fayetteville. All portions of the Contract Documents have been signed, initialed, or identified by The City of Fayetteville and Contractor.

SECTION 00500 – AGREEMENT
BETWEEN OWNER AND CONTRACTOR (continued)

This Agreement will be effective on May 14, 2026, which is the Effective Date of the Agreement.

CONTRACTOR:	CITY OF FAYETTEVILLE
By: J. Brock Posey	By:
(Type or legibly print)	(Type or legibly print)
(Signature)	(Signature)
Title: Owner	Title: Mayor

Contractor shall attach evidence of authority to sign.

If Contractor is a corporation, corporate entity or LLC, Contractor shall attach Corporate Resolution authorizing Contractor's signature and execution of Agreement.

Further if Contractor is a corporation, corporate entity or LLC, Contractor shall also attach a copy of the Contractor's Articles of Incorporation and a copy form the Arkansas State Secretary of State to document that the corporation, corporate entity or LLC is in current "Good Standing" with the State of Arkansas and such entity is permitted to perform work in the State of Arkansas.

(SEAL)	(SEAL)
Attest	Attest

SECTION 00500 – AGREEMENT
BETWEEN OWNER AND CONTRACTOR (continued)

Address for giving notices
2156 E. Emma Ave
Springdale AR 72764

Address for giving notices
113 W. Mountain St.
Fayetteville, AR 72701

License No. 0369280327

Agent for Service of process

J. Brock Posey

(Type or legibly print)

(Signature)

Contractor shall attach evidence of authority of Agent for Service process to sign. If Contractor is a corporation, corporate entity or LLC, Contractor shall attach Corporate Resolution authorizing Agent for Service process authority to sign.

(If Contractor is a corporation, corporate entity or LLC, attach evidence of authority to sign.)

Approved as to Form:

By: _____

Attorney For: _____

END OF SECTION 00500

Docusign Envelope ID: 85B26E48-5F0A-4EE2-A8C7-64F6C5F9E5A3

AMENDED AND RESTATED OPERATING AGREEMENT

OF

SOUTHERN BROTHERS CONSTRUCTION, LLC

Docusign Envelope ID: 85B26E48-5F0A-4EE2-A8C7-64F6C5F9E5A3

AMENDED AND RESTATED OPERATING AGREEMENT
OF
SOUTHERN BROTHERS CONSTRUCTION, LLC

THIS AMENDED AND RESTATED OPERATING AGREEMENT of SOUTHERN BROTHERS CONSTRUCTION, LLC (the "**Company**"), a limited liability company organized pursuant to the laws of the State of Arkansas, and particularly Act 1041 of 2021 of the Arkansas General Assembly, as amended, is entered into effective as of December 1, 2025 (the "**Effective Date**") by and among the Company and the undersigned sole Member of the Company. Unless otherwise provided herein, initially capitalized terms shall have the meanings set forth in EXHIBIT A.

WITNESSETH:

WHEREAS, the Company was originally formed on September 5, 2017 and was governed by an Operating Agreement dated effective June 6, 2025 (the "**Prior Operating Agreement**");

WHEREAS, the Member desires to enter into this Agreement setting forth the terms and conditions governing the operation and management of the Company, and desires to amend, supersede and replace the Prior Operating Agreement and any and all prior LLC Agreements or Operating Agreements with the terms and conditions set forth herein.

NOW THEREFORE, in consideration of the mutual promises, covenants and agreements contained herein, and other good and valuable consideration, the receipt and adequacy of which are hereby acknowledged, the parties hereto agree as follows:

ARTICLE I
DEFINITIONS

For purposes of this Agreement, the capitalized terms used herein shall have the following meanings, unless the context otherwise specifically requires:

1.1. **"Act"** shall mean and refer to Act 1041 of 2021 of the Arkansas General Assembly (Ark. Code Ann. § 4-38-101 et seq.), as amended.

1.2. **"Agreement"** shall mean and refer to this Amended and Restated Operating Agreement, and all amendments hereto.

1.3. **"Articles of Organization"** shall mean and refer to the Articles of Organization of the Company filed with the Arkansas Secretary of State, as properly amended from time to time by the Member.

1.4. **"Code"** shall mean and refer to the Internal Revenue Code of 1986, as amended.

Docusign Envelope ID: 85B26E48-5F0A-4EE2-A8C7-64F6C5F9E5A3

1.5. **"Company"** shall mean and refer to Southern Brothers Construction, LLC, the Arkansas limited liability company formed pursuant to the Articles of Organization and this Agreement.

1.6. **"Effective Date"** shall mean and refer to December 1, 2025.

1.7. **"Majority in Interest of the Members"** shall mean any Member (or group of Members), whose Sharing Ratio(s) exceed(s) fifty percent (50%), individually or in the aggregate.

1.8. **"Manager"** shall mean and refer to each of the Manager(s) appointed by the Member pursuant to Article IV. The Manager as of the Effective Date shall be J. Brock Posey.

1.9 **"Member"** shall mean and refer to Yesop, LLC, an Arkansas limited liability company.

1.10. **"Membership Interest"** shall mean and refer to the Member's ownership interest and rights in the Company as a Member. Membership Interests may be represented by units that are evidenced by certificates of interest.

1.11. **"Net Income"** and **"Net Loss"** for any period shall mean the Company's income or loss as determined for such period for federal income tax reporting purposes, plus any income exempt from federal income tax, and reduced by any expenditures that are neither deductible nor chargeable to a capital account for federal income tax purposes.

1.12. **"Sharing Ratio"** shall mean and refer to each respective Member's ownership interest in the Company expressed as a percentage. The Sharing Ratio for each Member is set forth opposite such Member's name on Exhibit A hereto.

ARTICLE II
ORGANIZATION

2.1. **Articles of Organization and Formation**. The Articles of Organization are hereby ratified and confirmed in all respects as the Articles of Organization of the Company. The Member hereby organizes the Company as a limited liability company pursuant to the terms of this Agreement, the provisions of the Act, and other applicable laws of the State of Arkansas and hereby adopts this Agreement, as it may from time to time be amended according to its terms, as the Operating Agreement of the Company. This Agreement supersedes and replaces the Prior Agreement and any previous operating agreements of the Company. In the event any terms of this Agreement conflict with the provisions of the Act, the terms of this Agreement shall govern and control, to the extent permissible under the Act. To the extent any provision of this Agreement is prohibited or ineffective under the Act, this Agreement shall be considered amended to the smallest degree possible in order to make such provision effective under the Act. The Company shall have perpetual existence unless sooner dissolved pursuant to Article VII.

Docusign Envelope ID: 85B26E48-5F0A-4EE2-A8C7-64F6C5F9E5A3

2.2. **Name**. The name of the Company shall be Southern Brothers Construction, LLC, and all business of the Company shall be conducted under this name and/or such other names approved by the Manager. The name of the Company may be changed from time to time by the Manager.

2.3. **Purpose**. The primary purpose of the Company, which is provided for informational purposes only, is to provide construction and related contracting services, and to own, sell, mortgage, encumber, lease and transfer real or personal property related thereto, and to engage in all other lawful activities permitted by the Act.

2.4. **Powers**. The Company shall have all the powers conferred by applicable law upon limited liability companies, including the power and authority to do all things necessary or convenient to accomplish its purposes and to operate its business in any lawful manner.

2.5. **Registered Agent and Office**. The registered agent and registered office of the Company shall be as set forth in the Articles of Organization. The registered agent and/or registered office of the Company may be changed from time to time by the Manager, and any such change shall be promptly reflected in an appropriate filing with the Arkansas Secretary of State and with all other necessary governmental agencies or other authorities.

2.6. **Principal Office**. The principal office of the Company shall be located at such place approved from time to time by the Manager.

2.7 **State and Local Filings**. The Company shall qualify or register to do business in any state or locality in which it is required to so qualify or register as a result of its conduct of business, the location of its assets or for any other reason.

ARTICLE III
RIGHTS, OBLIGATIONS AND DUTIES OF THE MEMBER

3.1. **Voting**. Only Members shall be entitled to vote on matters submitted to a vote of the Members. Voting rights shall be in accordance with the respective Sharing Ratios of the Members entitled to vote.

3.2. **Majority Approval**. Whenever any matter is required or allowed to be approved by the Members under the Act or this Agreement, except as otherwise provided herein, such matter shall be considered approved or consented to upon the receipt of the affirmative approval or consent, either in writing or at a meeting of the Members, of a Majority in Interest of the Members. Any action required or permitted to be taken at a meeting may be taken without a meeting if the action is evidenced by a written consent describing the action taken, signed by the Member and delivered for inclusion in the Company records. Any action taken pursuant to this section will be effective when the Member has signed the consent, unless the consent specifies a different effective date. When notice is required, a waiver of notice in writing signed by the person entitled to the notice will be equivalent to giving the notice. No annual or regular meetings are required.

Docusign Envelope ID: 85B26E48-5F0A-4EE2-A8C7-64F6C5F9E5A3

3.3. **Unanimous Consent**. Notwithstanding the foregoing, the following actions shall require the unanimous consent of the Members entitled to vote:

(a) Any amendment to this Agreement unless a lesser percentage of Sharing Ratios is provided for herein; and

(b) The admission of any new Member unless otherwise provided herein.

3.4. **Liability of Members**. No Member shall be liable as such for the liabilities of the Company. The failure of the Company to observe any formalities or requirements relating to the exercise of its powers or management of its business or affairs under this Agreement or the Act shall not be grounds for imposing personal liability on any Member for liabilities of the Company. Notwithstanding the foregoing, this Agreement shall not restrict any Member from, and any Member may, but shall not be obligated to, personally guaranty any indebtedness or liability of the Company.

3.5. **Indemnification**.

(a) Each Member (the "**Indemnifying Member**") shall indemnify and hold harmless the Company, the Manager and each of the other Members from and against any and all claims, liabilities, obligations, costs and expenses (including reasonable attorney's fees) incurred by or asserted against the Company, the Manager and/or any of the other Members to the extent resulting from the gross negligence or willful misconduct of the Indemnifying Member or any action taken by such Indemnifying Member in breach of this Agreement.

(b) To the extent permitted by applicable law, the Company shall indemnify and hold harmless each Member from and against all claims, liabilities, obligations, costs and expenses (including reasonable attorney's fees), to the extent resulting from the good faith performance by such Member of duties and services for and on behalf of the Company; provided, however, the foregoing indemnity shall not apply to the extent the claim, liability, obligation, cost or expense results from any breach of this Agreement by such Member or is otherwise attributable to such Member's gross negligence or willful misconduct.

3.6. **Conflicts of Interest**. Unless otherwise approved by all Members, any transaction between the Company and any Member shall be effected in a manner consistent with the manner in which the transaction would be effected between the Company and an independent third party bargaining at arm's length.

3.7. **Withdrawal**. No Member shall have the right to withdraw from the Company by voluntary act without the consent of all the other Members, if any.

3.8 **No Management by Members**. Except as otherwise specifically provided herein, no Member, other than a Manager, has the actual or apparent authority to cause the Company to become bound in any contract, agreement, or obligation, and no Member shall take any action purporting to so act on behalf of the Company. Other than as set forth specifically in this Agreement, the Member shall take no part in, or at any time interfere in any manner with, the

Docusign Envelope ID: 85B26E48-5F0A-4EE2-A8C7-64F6C5F9E5A3

management, conduct, or control of the Company's business and operations and shall have no right or authority to act for or bind the Company. The rights and powers of such Member shall not extend beyond those set forth in this Agreement and those granted under the Articles of Organization and any attempt to participate in the control of the Company in a manner contrary to the rights and powers granted herein and under the Articles shall be null and void and without force and effect. The exercise by any Member of any of the rights granted to the Member hereunder shall not be deemed to be taking part in the control of the business of the Company and shall not constitute a violation of this Section.

ARTICLE IV
MANAGEMENT

4.1. **Business Affairs.** Management of the business and affairs of the Company shall be vested in the Manager. There shall be one (1) Manager, and the initial Manager shall be J. Brock Posey. Members, unless also appointed (or hired) as a Manager, an officer or other employee, shall not participate in the day to day operation of the business affairs of the Company and, if so appointed (or hired), shall participate only within the scope of authority of such position as defined in this Agreement or elsewhere. A Manager need not be a natural person, Member, or a resident of the State of Arkansas. The number of Managers may be increased or decreased by the affirmative vote of Members whose Sharing Ratios exceed seventy-five percent (75%). A Manager shall serve in that position until the date on which a successor is elected and qualified or the date that such Manager resigns or becomes unable to serve.

4.2. **Powers of Manager(s).** The Manager(s) shall have all necessary powers to carry out the purposes, business, and objectives of the Company, including, but not limited to, the right to enter into and carry out contracts of all kinds; to employ employees, agents, consultants and advisors on behalf of the Company (including assigning titles to each); to lend or borrow money and to issue evidences of indebtedness; to bring and defend actions in law or at equity; and to do and perform all other acts as may be necessary or appropriate to the conduct of the business of the Company. The Manager(s) may deal with any related person, firm or corporation on terms and conditions that would be available from an independent responsible third party that is willing to perform.

4.3. **Standard of Care.** A Manager shall not be liable, responsible or accountable in damages or otherwise to the Company or the Members for any action taken, or any failure to act, on behalf of the Company, except to the extent such act or failure to act constitutes a breach of this Agreement or otherwise constitutes gross negligence or willful misconduct. In discharging their duties, the Managers shall be entitled to rely in good faith upon the records maintained by the Company and upon the advice of independent legal counsel, accountants and other professional experts as to matters reasonably believed to be within such other person's professional expertise.

4.4. **Indemnification.** To the extent permitted by applicable law, the Company shall indemnify and hold harmless each Manager from and against all claims, liabilities, obligations, costs and expenses (including reasonable attorney's fees), to the extent resulting from the good faith performance by such Manager of duties and services for and on behalf of the Company; provided, however, the foregoing indemnity shall not apply to the extent the claim, liability,

Docusign Envelope ID: 85B26E48-5F0A-4EE2-A8C7-64F6C5F9E5A3

obligation, cost or expense results from any breach of this Agreement by such Manager or is otherwise attributable to such Manager's gross negligence or willful misconduct.

4.5. **Meetings**. Meetings of the Managers may be called by any Manager on five (5) days' prior written notice to each Manager. If no place for the meeting is designated, the place of meeting will be the principal office of the Company. Any action required or permitted to be taken at a meeting may be taken without a meeting if the action is evidenced by a written consent describing the action taken, signed by each Manager and delivered for inclusion in the Company records. Any action taken pursuant to this section will be effective when the necessary number of Managers have signed the consent, unless the consent specifies a different effective date. When notice is required, a waiver of notice in writing signed by the person entitled to the notice will be equivalent to giving the notice. No annual or regular meetings are required.

4.6. **Officers**. The Manager may appoint individuals as officers of the Company (the "**Officers**") as it deems necessary or desirable to carry on the business of the Company, and the Manager may delegate to such Officers such power and authority as the Manager deems advisable. No Officer need be a Member of the Company. Any individual may hold two or more offices of the Company. Each Officer shall hold office until his successor is designated by the Manager or until his earlier death, resignation or removal. Any Officer may resign at any time upon written notice to the Manager. Any Officer may be removed by the Manager with or without cause at any time. A vacancy in any office occurring because of death, resignation, removal or otherwise, may, but need not, be filled by the Manager.

4.7. **Compensation and Reimbursement of Manager**. The Manager shall not be compensated for its services as the Manager, but the Company shall reimburse the Manager for all ordinary, necessary and direct expenses incurred by the Manager on behalf of the Company in carrying out the Company's business activities, including, without limitation, salaries of officers and employees of the Manager who are carrying out the Company's business activities. All reimbursements for expenses shall be reasonable in amount.

ARTICLE V
CONTRIBUTIONS AND CAPITAL ACCOUNT

5.1. **Capital Contributions**. The Member shall make such capital contributions to the Company, if any, as determined from time to time by the Member, in the Member's sole and absolute discretion. Any such capital contributions shall be made in a form, manner and at such time or times as the Member shall determine, in the Member's sole and absolute discretion. Nothing contained herein shall require the Member to make any capital contribution to the Company.

5.2. **Interest on Capital Contributions; Withdrawal of Capital**. The Member shall not be entitled to interest on capital contributions to the Company, unless otherwise approved by the Member. Except to the extent prohibited by applicable law, the Member may withdraw all or any part of the Member's capital account, at such time or times as determined by the Member, in the Member's sole and absolute discretion.

Docusign Envelope ID: 85B26E48-5F0A-4EE2-A8C7-64F6C5F9E5A3

5.3. **Capital Account**. A capital account reflecting the Member's continuing investment in the Company, as appropriately adjusted from time to time, shall be maintained for the Member in accordance with this Agreement and the Act, and in a manner consistent with the Code, applicable regulations thereunder and other applicable law.

5.4. **Compliance with Code Requirements; Deficit Capital Account**. To the extent applicable, the provisions of this Agreement shall be applied and construed in a manner consistent with the Code and regulations thereunder; provided, notwithstanding anything herein to the contrary, this Agreement shall not be applied or otherwise construed to create a capital account deficit restoration obligation or otherwise personally obligate the Member to make any capital contribution to the Company beyond the actual capital contributions, if any, made to the Company by the Member in the Member's sole and absolute discretion.

ARTICLE VI
ALLOCATIONS AND DISTRIBUTIONS

6.1. **Allocations**. Net Income, Net Loss and all other items of income, gain, loss, deduction and credit, for each taxable year of the Company, shall be allocated to and reported by the Member in accordance with the Code, applicable regulations thereunder and other applicable law.

6.2. **Distributions**. Except to the extent prohibited by applicable law, cash or other property of the Company may be distributed to the Member at such times and in such amounts and form as determined from time to time by the Manager in the Manager's sole and absolute discretion.

ARTICLE VII
DISSOLUTION AND WINDING UP

7.1. **Dissolution**. The Company shall be dissolved and its affairs wound up, upon the first to occur of the following events (which, unless the Member determines to continue the business, shall constitute events of dissolution):

(a) The occurrence of any event requiring dissolution of the Company under the Act; or

(b) The express written consent of the Member to dissolve and liquidate the Company.

7.2. **Effect of Dissolution**. Upon dissolution, the Company shall cease carrying on, as distinguished from the winding up of, the Company business, but the Company is not terminated, and the Company shall continue until the winding up of the affairs of the Company is completed and a certificate of dissolution has been filed with and accepted by the Arkansas Secretary of State as required by the Act.

7.3. **Liquidation**. In the event of any such dissolution, the following procedure for liquidation shall apply:

Docusign Envelope ID: 85B26E48-5F0A-4EE2-A8C7-64F6C5F9E5A3

(a) The Manager shall proceed to wind up the affairs of the Company as promptly as practical and to liquidate its assets in a commercially reasonable, orderly and businesslike manner. The manner of the sale, liquidation or distribution of any property of the Company shall be determined by the Manager provided such determination is made on a fair and equitable basis in accordance with the Manager's reasonable business judgment.

(b) Any gain or loss realized by the Company upon the sale of any of its assets shall be appropriately allocated to the Member's capital account in accordance with the Code and applicable regulations thereunder.

(c) The proceeds of liquidation and all other property of the Company shall be applied and distributed as follows:

(1) First, to pay all bona fide liabilities, debts, and other obligations of the Company, including any expenses incurred in winding up the affairs of the Company, and to fund any reserve reasonably necessary in order to provide for the payment of any contingent liability.

(2) Second, the balance shall be distributed to the Member.

(d) The Member shall make, execute, assign, acknowledge and file, on behalf of the Company, all documents necessary or desirable to effect the dissolution, liquidation and winding up of the Company. The Member, upon request, shall promptly execute, acknowledge and deliver all such documents, certificates and other instruments as shall be reasonably requested to effect the proper termination and dissolution of the Company.

7.4. **Winding Up and Certificate of Dissolution**. The winding up of the Company shall be completed when all debts, liabilities, and obligations of the Company have been paid and discharged or reasonably adequate provision has been made therefor, and all of the remaining property and assets of the Company shall have been distributed to the Member. Upon completion of the winding up of the Company, a certificate of dissolution, containing the information required by the Act, shall be filed with the Arkansas Secretary of State as required by the Act.

ARTICLE VIII
TAXES

8.1. **Tax and Fiscal Year**. The Member intends that the Company be classified as a "disregarded entity" for federal and state income tax purposes.

8.2. **Method of Accounting**. The Company shall utilize such permissible methods of accounting for tax and financial reporting purposes as determined by the Manager.

8.3. **Out of State Taxes**. To the extent that the laws of any state or other jurisdiction require, the Member will submit any and all necessary agreements accepting jurisdiction to such

Docusign Envelope ID: 85B26E48-5F0A-4EE2-A8C7-64F6C5F9E5A3

state and confirming the Member's agreement to make timely income tax payments to such state or other jurisdiction as required by applicable law.

ARTICLE IX
ACCOUNTING AND RECORDS

9.1. **Bank Accounts.** All moneys and other funds of the Company shall be deposited in the name of the Company in an account or accounts at a bank or other financial institution acceptable to the Manager. The authorized signatories to such accounts shall include only such individuals authorized from time to time in writing by the Company; provided that the Manager shall be authorized to open checking, deposit, credit card, investment or similar financial accounts in the name of the Company at any bank or similar financial institution acceptable to him and he shall be an authorized signatory on all such accounts. Company moneys and other funds shall be kept separated and segregated from the funds of the Member.

9.2. **Records to be Maintained.** The Company shall maintain the following records at its principal office:

(a) The full name and last known business address of the Member and Manager of the Company;

(b) A copy of the Articles of Organization and all amendments thereto, together with executed copies of any powers of attorney pursuant to which any such Articles of Organization or amendments have been executed;

(c) Copies of the Company's federal and state income tax returns and reports, if any, for the three most recent years;

(d) Copies of this Agreement including all amendments thereto; and

(e) Any financial statements of the Company for the three most recent years.

ARTICLE X
MISCELLANEOUS PROVISIONS

10.1. **Assignment.** This Agreement and the rights, obligations and duties of the parties hereunder shall not be assignable or otherwise transferable except as specifically provided herein.

10.2. **Modification.** No term or provision contained herein may be modified, amended or waived except by written agreement or consent signed by the Member.

10.3. **Binding Effect and Benefit.** This Agreement shall inure to the benefit of, and shall be binding upon, the parties hereto, and their respective heirs, executors, administrators, personal representatives, successors and permitted assigns. Otherwise, this Agreement shall not create any rights for the benefit of any third party.

Docusign Envelope ID: 85B26E48-5F0A-4EE2-A8C7-64F6C5F9E5A3

10.4. **Headings and Captions**. Subject headings and captions are included for convenience purposes only and shall not affect the interpretation of this Agreement.

10.5. **Severability**. If any portion of this Agreement is held invalid, illegal or unenforceable, such determination shall not impair the enforceability of the remaining terms and provisions contained herein, provided the purposes intent and objects of this Agreement may be attained and achieved through the enforcement of such remaining terms and provisions.

10.6. **Waiver**. No waiver of a breach or violation of any provision of this Agreement shall operate or be construed as a waiver of any subsequent breach or limit or restrict any right or remedy otherwise available. Any waiver must be in writing.

10.7. **Entire Agreement**. This document constitutes the entire agreement of the parties and supersedes any and all other prior agreements, oral or written, with respect to the subject matter contained herein.

10.8. **Governing Law**. This Agreement shall be subject to and governed by the laws of the State of Arkansas.

10.9. **Disregard of Company for Tax Purposes.** The Member has formed the Company as a limited liability company under the Act. It shall be disregarded as an entity separate from its owner for federal and state income tax purposes.

10.10. **Security**. For purposes of Article 8 of the Uniform Commercial Code, the Membership Interests of the Company (and any units or shares thereof) shall be a "security", but this shall not mean or imply that the Membership Interests (or any units or shares thereof) are otherwise a "security" under applicable law.

10.11. **Rights of Third Parties**. This Agreement is entered into among the Company and the Member for the exclusive benefit of the Company, its Member, the Manager and their permitted successors and assigns. This Agreement is expressly not intended for the benefit of any creditor of the Company or any other third party, and no such creditor or third party shall have any rights under this Agreement.

[Remainder of Page Intentionally Blank; Signature Page Follows]

Docusign Envelope ID: 85B26E48-5F0A-4EE2-A8C7-64F6C5F9E5A3

IN WITNESS WHEREOF, the undersigned Member has executed this Amended and Restated Operating Agreement of Southern Brothers Construction, LLC as of the Effective Date.

YESOP, LLC

Signed by:

By: _____
F613726C2BAE40B...

J. Brock Posey, Manager

Docusign Envelope ID: 85B26E48-5F0A-4EE2-A8C7-64F6C5F9E5A3

EXHIBIT A

Name and Address of Members	Initial Capital Contributions	No. of Units	Membership Interest/Sharing Ratio
Yesop, LLC 2156 E. Emma Avenue Springdale, AR 72764	$1,000	100	100%

STATE OF ARKANSAS

SECRETARY OF STATE

Mark Martin
ARKANSAS SECRETARY OF STATE

To All to Whom These Presents Shall Come, Greetings:

I, Mark Martin, Arkansas Secretary of State of Arkansas, do hereby certify that the following and hereto attached instrument of writing is a true and perfect copy of

Articles of Organization

of

SOUTHERN BROTHERS CONSTRUCTION, LLC

filed in this office
September 05, 2017

In Testimony Whereof, I have hereunto set my hand and affixed my official Seal. Done at my office in the City of Little Rock, this 5th day of September 2017.

Mark Martin

Mark Martin
Secretary of State

Online Certificate Authorization Code: 13556659aeec645b9b0
To verify the Authorization Code, visit sos.arkansas.gov

SEAL OF THE SECRETARY OF STATE ARKANSAS

ARTICLES OF ORGANIZATION
OF
SOUTHERN BROTHERS CONSTRUCTION, LLC

The undersigned, desiring to form a Limited Liability Company in accordance with the laws of the State of Arkansas, and particularly the provisions of the Small Business Entity Tax Pass Through Act, as amended (the "Act"), hereby certifies as follows:

1. NAME. The name of the Limited Liability Company shall be Southern Brothers Construction, LLC (hereinafter the "Company").

2. REGISTERED OFFICE. The address of the registered office of the Company is 237 S. Locust Avenue, Fayetteville, Arkansas 72701.

3. REGISTERED AGENT. The name and business address of the registered agent of the Company is Shawn Gray, 237 S. Locust Avenue, Fayetteville, Arkansas 72701.

4. MANAGEMENT. Management of the Company is vested in one or more managers, as more particularly set forth in the Operating Agreement of the Company.

5. AMENDMENT. From time to time, these Articles of Organization may be restated, amended or repealed, and other provisions may be added hereto, in the manner authorized by the applicable laws of the State of Arkansas.

IN WITNESS WHEREOF, the undersigned has executed these Articles of Organization this ___ day of August, 2017 on behalf of the parties who shall be its members.

SOUTHERN BROTHERS CONSTRUCTION, LLC

By: _____
Shawn Gray, Organizer

Articles of Organization for Domestic LLC

Filing Information

Filing Act: 1003 of 1993
Entity Name: SOUTHERN BROTHERS CONSTRUCTION, LLC
File Date: 2017-09-05 12:06:27
Effective Date: 2017-09-05
Filing Signature: SHAWN GRAY
Manager Statement: MANAGEMENT OF THE COMPANY IS VESTED IN ONE OR MORE MANAGERS, AS MORE PARTICULARLY SET FORTH IN THE OPERATING AGREEMENT OF THE COMPANY.

Registered Agent:

First Name: SHAWN
Last Name: GRAY
Address 1: 237 S LOCUST AVENUE
City: FAYETTEVILLE
State: AR
Zip: 72701
Country: USA

Officers

First Name: SHAWN
Last Name: GRAY
Title: Incorporator/Organizer
Address 1: 237 S LOCUST AVENUE
City: FAYETTEVILLE
State: AR
Zip: 72701
Country: USA

Principal

Entity Name: SOUTHERN BROTHERS CONSTRUCTION, LLC
Address 1: 237 S LOCUST AVENUE
City: FAYETTEVILLE
State: AR
Zip: 72701
Country: USA

RESOLUTIONS AND CONSENT OF THE SOLE MANAGER
OF
SOUTHERN BROTHERS CONSTRUCTION, LLC

JANUARY 1, 2026

The undersigned, being the sole Manager (the "**MANAGER**") of Southern Brothers Construction, LLC, an Arkansas limited liability company (the "**COMPANY**"), hereby adopts, ratifies and approves the following action of the Company without a meeting in accordance with the Amended and Restated Operating Agreement of the Company dated December 1, 2025 (the "**OPERATING AGREEMENT**"):

APPOINTMENT OF OFFICERS

WHEREAS, the Manager acknowledges and certifies that he is sole the Manager of the Company and was appointed as the sole Manager pursuant to Section 4.1 of the Operating Agreement, and in such capacity, the Manager hereby takes the following actions:

RESOLVED, that the following persons are hereby appointed as officers of the Company, to serve at the pleasure of the Manager, or until their successors are otherwise duly elected and qualified:

J. Brock Posey	President
Justin Reeves	Chief Operating Officer

RESOLVED, that the Manager, President and the Chief Operating Officer are each hereby authorized and directed to apply for and obtain any and all licenses, permits, and governmental authorizations required by applicable law in connection with the operation of the Company's construction business, to pay all appropriate fees and costs associated therewith, to serve as registered agent as required in connection with any such governmental filings, applications, submissions or authorizations, and to take all other actions required of the Company in connection with any such filings, submissions, applications or authorizations;

RESOLVED, that the Manager and the President are each hereby authorized to employ personnel as necessary to furnish services in connection with the Company's business; and

RESOLVED, that each of the Manager, President and the Chief Operating Officer be, and each of them hereby is, authorized and directed to take all such further actions and to execute and deliver, in the name and on behalf of the Company, any and all such further documents and instruments, and to pay all such expenses, as they or any of them may deem necessary, desirable, advisable or appropriate to effectuate or carry out the purposes of any and all of the foregoing resolutions and

the applications, submissions and filings contemplated thereby; and that the taking of each such action, the execution and delivery of each such document or instrument, and the payment of each such expenses shall be conclusive evidence of its necessity or advisability.

A copy of this consent to action of the Company without a meeting shall be filed for inclusion in the record book of the Company.

IN WITNESS WHEREOF, the undersigned has executed these Resolutions and Consent of the Manager without a meeting effective as of date and year first set forth above.

MANAGER:

SOUTHERN BROTHERS CONSTRUCTION, LLC

By: _____
J. Brock Posey, Manager

City of Fayetteville, Arkansas
Procurement Division – Room 306
113 W. Mountain
Fayetteville, AR 72701
Phone: 479.575.8256
TDD (Telecommunication Device for the Deaf): 479.521.1316

INVITATION TO BID

Bid 26-30, Construction – Noland WWTF Switchgear

DEADLINE: Thursday, April 30, 2026 before 2:00 PM, Local Time
PRE-BID MEETING: Thursday, April 16, 2026 at 3:00 PM
SR. PROCUREMENT AGENT: Kenny Fitch, kfitch@fayetteville-ar.gov
DATE OF ISSUE & ADVERTISEMENT: 04/05/2026 & 04/12/2026

No late bids shall be accepted. Bids shall be submitted in one of the following methods: (1) through the City's third-party electronic bidding platform or (2) delivering in person via sealed envelope to the City of Fayetteville Procurement Division. Submitting through the City's electronic bidding platform is strongly encouraged. All bids shall be submitted in accordance with the attached City of Fayetteville specifications and bid documents attached hereto. Each bidder is required to fill in every blank and shall supply all information requested; failure to do so may be used as basis of rejection.

NOTICE TO ALL BIDDERS:

All interested parties can obtain files for this project by going to http://fayetteville-ar.gov/bids. Bid documents shall be distributed electronically from the City of Fayetteville Procurement Division only.

BID PACKAGE INCLUDES THE FOLLOWING FILES WHICH SHALL BE LISTED UNDER "ATTACHMENTS":

FILE #01: PROJECT MANUAL – **551 Total Pages**
FILE #02: PLANS – **27 Plan Sheets**

*Additional files added as addendums are issued. Addendums will be uploaded and posted to the City's electronic bidding platform.

***PLAN HOLDER LISTINGS: A listing of vendors who have received documents can be found in the City's electronic bidding platform under the project section tab titled 'Plan Holders'.**

Bidder shall assume all responsibility for receiving updates and any addenda issued to this project by monitoring http://fayetteville-ar.gov/bids. Failure to acknowledge addenda issued as instructed could result in bid rejection.

THIS PAGE INTENTIONALLY LEFT BLANK

CITY OF FAYETTEVILLE ARKANSAS

Project Check List

This checklist is for the Bidder's use in preparing & submitting a bid. It is not intended to include all details necessary to prepare a bid and shall not be used as a substitute for the requirements of the bid documents. Use of this checklist does not relieve the Bidder from the responsibility of meeting all requirements of the Specifications concerning the preparation of an acceptable bid. Bidders are welcome to use this form as a coversheet for a sealed envelope; however, using this form itself is NOT a requirement.

☐ 5% Bid Bond of the amount bid accompanied by required documentation (Power of Attorney, etc.)

- In lieu of a bid bond, the bidder may submit a cashier's check from a bank located in the State of Arkansas for at least five percent (5%) of the amount bid (inclusive of any deductive alternates). Cashier's checks shall be made payable to the City of Fayetteville, AR and received prior to the bid deadline by making an in-person delivery appointment with the City Procurement Division.

☐ All addenda shall be signed, acknowledged, and submitted on the appropriate forms (submitting the actual addendums or marking acknowledgement on other bid pages).

☐ All pages provided with signature lines shall be appropriately signed, dated accordingly, and included with submitted bid documents

☐ All bids shall be received before the stated deadline utilizing the City's electronic bidding platform or submitting a physical sealed bid to the City Procurement Division. Submitting a bid electronically is strongly encouraged. A public bid opening will be conducted shortly after the deadline at City Hall and livestreamed on Zoom. Late or misdirected bids shall not be accepted. The City of Fayetteville shall not be responsible for lost or misdirected bids, or failure of bidder's technical equipment. If submitting a physical bid, all bid documents shall be delivered in a sealed envelope to the address stated in the advertisement or updated deadline issued via Addenda. All bids should be delivered with the name of the bidder (contractor) on the sealed envelope as well as the bidders Arkansas Contractor's License Number.

☐ <u>Additional Information Requested</u>:

- AR Secretary of State Filing #: _____ OR submit electronically.
- Arkansas Contractor License #: _____ OR submit electronically.
- SAM Unique Entity Identifier #: _____ OR submit electronically.
- Pursuant Arkansas Code Annotated §25-1-503, the Contractor agrees and certifies that they do not currently boycott Israel and will not boycott Israel during any time in which they are entering into, or while in contract, with any public entity as defined in §25-1-503. If at any time during contract the contractor decides to boycott Israel, the contractor must notify the contracted public entity in writing.
  - Submit electronically or circle applicable answer: YES *or* NO
- Pursuant Arkansas Code Annotated §25-1-1002, the Contractor agrees and certifies that they do not currently boycott Energy, Fossil Fuel, Firearms, and Ammunition Industries during any time in which they are entering into, or while in contract, with any public entity as defined in §25-1-1002. If at any time during the contract the contractor decides to boycott Energy, Fossil Fuel, Firearms, and/or Ammunition Industries, the contractor must notify the contracted public entity in writing.
  - Submit electronically or circle applicable answer: YES *or* NO

CITY OF FAYETTEVILLE ARKANSAS

Advertisement

City of Fayetteville, Arkansas
INVITATION TO BID
Bid 26-30, Construction – Noland WWTF Switchgear

The City of Fayetteville is accepting sealed bids from properly licensed contractors to construct a switchgear building and install medium voltage switchgear at the Noland Wastewater Treatment Facility. Questions regarding this bid should be addressed to Kenny Fitch, Sr. Procurement Agent at kfitch@fayetteville-ar.gov.

A non-mandatory pre-bid meeting will be held Thursday, April 16, 2026, at 3:00 PM. Details regarding the pre-bid meeting are available on the project page on the City's electronic bidding platform. All interested parties are encouraged to attend.

Bidding documents, plans, plan holders, and addenda shall be obtained at the City of Fayetteville Procurement Division's electronic bidding platform at www.fayetteville-ar.gov/bids. All bids shall be received by Thursday, April 30, 2026, before 2:00 PM local time, utilizing the electronic bidding software or submitting a sealed bid to the City of Fayetteville Procurement Division. Submitting a bid electronically is strongly encouraged. A public bid opening will be conducted shortly after the deadline and livestreamed on Zoom.

Each bid exceeding $50,000 shall be accompanied by a cashier's check from a bank doing business in the State of Arkansas or a corporate bid bond for five (5) percent of the amount bid. In the event a bidder opts to submit a cashier's check for a bid bond, the actual physical cashier's check shall be delivered to the City prior to the deadline. One hundred percent (100%) performance and payment bonds are required after the contract award. This amount includes any approved contingency.

Bidders shall have a valid State of Arkansas Contractors License prior to the bid submission deadline and a registration in good standing with the Arkansas Secretary of State prior to the contract award.

Pursuant to Arkansas Code Annotated §22-9-203 The City of Fayetteville encourages all *qualified* small, minority and women business enterprises to bid on and receive contracts for goods, services, and construction. Also, City of Fayetteville encourages all general contractors to subcontract portions of their contract to *qualified* small, minority and women business enterprises.

The City of Fayetteville reserves the right to waive irregularities, reject bids, and postpone the award of any Contract for a period which shall not exceed beyond ninety (90) days from the bid opening date.

City of Fayetteville
By: Kenny Fitch
Sr. Procurement Agent
479.578.8258 kfitch@fayetteville-ar.gov
TDD (Telecommunications Device for the Deaf): (479) 521-1316
Date of advertisement: 04.05.26 & 04.12.26
This publication was paid for by the Procurement Division of the City of Fayetteville, Arkansas.
Amount paid: $408.20

Project Manual

CITY OF
FAYETTEVILLE
ARKANSAS

Noland Wastewater Treatment Plant
Switchgear Replacement

BID # 26-30, Construction – Noland WWTF Switchgear
Date: April 2026

SECTION 00007 - SEALS

The professional license seals listed on this page represent design responsibility for the Drawings and Technical Specifications (Divisions 01 through 16) presented in this project.

Joshua S. Durham, P.E.
Hawkins-Weir Engineers, Inc.
Arkansas License No.

Certification of Authorization
Hawkins-Weir Engineers, Inc.
No. 101

Scott McBrayer, P.E.
Hawkins-Weir Engineers, Inc.
Arkansas License No. 9686

Larry C. Hardin, P.E.
Hawkins-Weir Engineers, Inc.
Arkansas License 13205

SECTION 00007 - SEALS

THIS PAGE INTENTIONALLY LEFT BLANK

SECTION 00010 -TABLE OF CONTENTS

Noland Wastewater Treatment Plant
Switchgear Replacement

Bid 26-30, Construction – Noland WWTF Switchgear

CONTRACT DOCUMENTS

INVITATION TO BID COVER

INTRODUCTORY INFORMATION

00007	SEALS	00001-1 of 2
00010	TABLE OF CONTENTS	00010-1 of 4
00100	**BID SOLICITATION**	
00140	BIDDER'S QUALIFICATION STATEMENT	00140-1 of 4
00200	INSTRUCTIONS TO BIDDERS	00200-1 of 12
00400	**BID FORMS AND SUPPLEMENTS**	
00400	BID FORM	00400-1 of 8
00410	BID BOND	00410-1 of 2
00430	LIST OF SUBCONTRACTORS	00430-1 of 2
00500	**AGREEMENT FORM**	
00500	AGREEMENT BETWEEN OWNER AND CONTRACTOR	00500-1 of 10
00550	NOTICE TO PROCEED	00550-1 of 2
00600	**BONDS AND CERTIFICATES**	
00610	PERFORMANCE BOND	00610-1 of 4
00611	LABOR AND MATERIAL PAYMENT BOND	00611-1 of 4
00640	WARRANTY BOND	00640-1 of 2
00700	**CONTRACT GENERAL CONDITIONS**	
00700	TABLE OF CONTENTS	00700TOC-1 of 4
00700	GENERAL CONDITIONS	00700-1 of 52
00800	**SUPPLEMENTARY CONDITIONS**	
00800	SUPPLEMENTAL CONDITIONS	00800-1 of 8

DIVISION 1 - GENERAL REQUIREMENTS

01110	SUMMARY OF WORK	01110-1 of 4
01250	CONTRACT MODIFICATION PROCEDURES	01250-1 of 2
01270	UNIT PRICES	01270-1 of 2
01271	MEASUREMENT AND PAYMENT	01271-1 of 4
01290	PAYMENT PROCEDURES	01290-1 of 2
01290.1	APPLICATION FOR PAYMENT FORM	01290.1-1 of 2
01290.12	CERTIFICATE OF SUBSTANTIAL COMPLETION	01290.12-1 of 1
01290.14	CONTRACTOR AFFIDAVIT FOR FINAL PAYMENT	01290.14-1 of 2

SECTION 00010 -TABLE OF CONTENTS, (continued)

01290.15	SUBCONTRACTOR AFFIDAVIT FOR FINAL PAYMENT	01290.15-1 of 2
01320	PROJECT MEETINGS, SCHEDULES, AND REPORTS	01320-1 of 4
01321	SCHEDULE	01321-1 of 2
01420	DEFINITIONS AND STANDARDS	01420-1 of 4
01530	TEMPORARY BARRIERS AND CONTROLS	01530-1 of 8
01560	TEMPORARY UTILITIES AND FACILITIES	01560-1 of 10
02003	TRENCH SAFETY/PROTECTIVE SYSTEMS	02003-1 of 2
02004	CONFINED SPACES	02004-1 of 2
02005	PUBLIC EMPLOYEES RIGHT TO KNOW ACT	02005-1 of 2

TECHNICAL SPECIFICATIONS

01010	SPECIAL CONDITIONS	01010-1 of 1
01111	SITE CONDITIONS	01111-1 of 4
01300	SUBMITTALS	01300-1 of 8
01350	ENVIRONMETAL PROTECTION PROCEDURES	01350-1 of 6
01450	FIELD QUALITY CONTROL	01450-1 of 4
01740	CLEANING	01740-1of 2
01781	PROJECT RECORD DOCUMENTS	01781-1 of 6
02100	SITE PREPARATION	02100-1 of 6
02200	EARTHWORK	02200-1 of 16
02316	STRUCTURAL EXCAVATION, BACKFILLING AND GRADING	02316-1 of 10
02370	EROSION AND SEDIMENTATION CONTROL	02370-1 of 8
02501	PAVEMENT AND DRAINAGE IMPROVEMENTS	02501-1 of 12
02921	SODDING	02921-1 of 6
03100	CONCRETE FORMWORK	03100-1 of 6
03200	CONCRETE REINFORCEMENT	03200-1 of 8
03250	CONCRETE JOINTS AND JOINT ACCESSORIES	03250-1 of 6
03300	CAST-IN-PLACE CONCRETE	03300-1 of 24
03350	CONCRETE FINISHES	03350-1 of 8
03600	GROUT	03600 1 of 8
03740	MODIFICATION OR REPAIR OF EXISTING CONCRETE	03740-1 of 10
03800	CONCRETE ELECTRICAL DUCT ENCASEMENT	03800-1 of 2
04200	MASONRY	04200-1 of 24
05120	STRUCTURAL STEEL	05120-1 of 6
05210	STEEL JOISTS	05210-1 of 8
05310	METAL DECKING	05310-1 of 6
05513	GALVANIZING	05513-1 of 4
07110	FLUID-APPLIED MEMBRANE AIR BARRIERS	07110-1 of 8
07210	BUILDING INSULATION	07210-1 of 4
07552	MODIFIED BITUMEN ROOFING	07552-1 of 10
07600	FLASHING AND SHEET METAL	07600-1 of 4
07720	ROOFING SPECIALITIES AND ACCESSORIES	07720-1 of 2
07840	FIRESTOPPING	07840-1 of 10
07901	JOINT SEALANTS	07901-1 of 4
08331	OVERHEAD COILING DOORS	08360-1 of 2
08410	ALUMINUM DOORS, WINDOWS, AND FRAMES	08410-1 of 4
08710	DOOR HARDWARE	08710-1 of 6

SECTION 00010 -TABLE OF CONTENTS, (continued)

08800	GLAZING	08800-1 of 4
09902	FINISH PAINTING	09902-1 of 16
10522	FIRE EXTINGUISHER, CABINETS, AND ACCESSORIES	10522-1 of 2
16000	ELECTICAL GENERAL PROVISIONS	16000-1 of 8
16110	RACEWAYS AND BOXES	16110-1 of 8
16111	ELECTRICAL HANDHOLES	16111-1 of 2
16120	WIRE AND CABLE	16120-1 of 4
16125	MEDIUM VOLTAGE CABLE	16125-1 of 4
16140	WIRING DEVICES	16140-1 of 2
16195	ELECTRICAL IDENTIFICATION	16195-1 of 2
16200	ELECTRIC UTILITY SERVICE	16200-1 of 2
16220	DUAL PURPOSE DOCKING STATION	16220-1 of 4
16250	GROUNDING AND BONDING	16250-1 of 4
16320	PAD MOUNTEDLIQUID FILLEDTRANSFORMERS	16320-1 of 6
16460	TRANSFORMERS	16460-1 of 2
16470	PANELBOARDS	16470-1 of 8
16500	LIGHTING FIXTURES	16500-1 of 4
16600	HVAC	16600-1 of 10
16940	NETWORKING	16940-1 of 4

END OF SECTION 00010

SECTION 00010 -TABLE OF CONTENTS, (continued)

THIS PAGE INTENTIONALLY LEFT BLANK

SECTION 00140 – BIDDER'S QUALIFICATION STATEMENT

Contract Name: Noland Wastewater Treatment Plant
Switchgear Replacement

Bid 26-30, Construction – Noland WWTF Switchgear

Date: _____, 20__

SUBMITTED TO:

The City of Fayetteville, Arkansas

113 West Mountain Street

Fayetteville, Arkansas 72701

SUBMITTED BY:

Company _____

Name _____

Address _____

Principal Office _____

Corporation, LLC, partnership, individual, joint venture, other _____

Arkansas State General Contractor's License Number

_____

(Type or legibly print)

For a Bidder (Contractor) to be considered as Qualified, the Contractor must satisfy all insurance, financial, and bonding requirements of the City of Fayetteville.

The Contactor must also provide documentation with the bid to document:

> The Contractor shall have executed work for municipalities with a minimum of three (3) projects equaling or exceeding two hundred thousand dollars ($200,000) for similar projects. Acceptable documentation of these minimum installations must be submitted to the City of Fayetteville attached to this section.

EXPERIENCE STATEMENT (MANDATORY)

1. Bidder has been engaged as a General Contractor in construction for _____ years and has performed work of the nature and magnitude of this Contract for _____ years. Bidder has been in business under its present name for _____ years.

SECTION 00140 – BIDDER'S QUALIFICATION STATEMENT (continued)

2. Bidder now has the following bonded projects under contract: (On a separate sheet, list project name, owner, name of owner contact, engineer / architect, name of engineer/architect contact, amount of contract, surety, and estimated completion date.)

3. Bidder has completed the following (list minimum of 3) contracts consisting of work similar to that proposed by this Contract: (On a separate sheet, list project name, owner, name of owner contact, engineer / architect, name of engineer/architect contact, amount of contract, surety, and date of completion and percentage of the cost of the Work performed with Bidder's own forces.)

4. Has Bidder ever failed to complete any project? If so, state when, where, and why.

5. Bidder normally performs the following work with his own forces:

_____

_____

_____

_____

6. Construction experience of key individuals in the organization is as follows (continued on attached sheets if needed):

_____

_____

_____

_____

7. In the event the Contract is awarded to Bidder, the required surety Bonds will be furnished by the following surety company and name and address of agent:

_____

_____

_____

_____

8. Bidder's Workmen's Compensation Experience Modifier Factor is:

_____

SECTION 00140 – BIDDER'S QUALIFICATION STATEMENT (continued)

FINANCIAL STATEMENT (IF REQUESTED)

A. If requested by the City of Fayetteville during the evaluation of bids the bidder shall provide to the City of Fayetteville the following additional information:

Bidder possesses adequate financial resources as indicated by the following:

1. Assets and Liabilities: Attach a financial statement, audited if available, including Bidder's latest balance sheet and income statements showing the following items:

   a. Current assets (cash, joint venture accounts, accounts receivable, notes receivable, accrued income, deposits, materials inventory, and prepaid expenses).

   b. Net fixed assets.

   c. Other assets.

   d. Current liabilities (accounts payable, notes payable, accrued expenses, provision for income taxes, advances, accrued salaries, and accrued payroll taxes).

   e. Other liabilities (capital, capital stock, authorized and outstanding shares par values, earned surplus, and retained earnings).

   f. Name of firm preparing financial statement and date thereof:

   If financial statement is not for identical organization named herein, explain relationship and financial responsibility of the organization furnished.

2. Current Judgments: The following judgements are outstanding against Bidder:

	Judgment Creditors	Where Docketed and Date	Amount
a.	_____	_____	$_____
b.	_____	_____	$_____

SECTION 00140 – BIDDER'S QUALIFICATION STATEMENT (continued)

Bidder hereby represents and warrants that all statements set forth herein are true and correct.

Date: _____, 20__

(OFFICIAL SEAL)

Name of Organization:

_____

By _____

(Type or legibly print)

By _____

(Signature) SEAL

Title _____

(Type or legibly print)

If Bidder is a partnership, the partnership name shall be signed, followed by the signature of at least one of the partners. If Bidder is a corporation or LLC, the corporate name shall be signed, followed by the signature of a duly-authorized officer and with the corporate seal affixed.

Contractor shall attach evidence of authority of signature. If Contractor is a corporation, corporate entity or LLC, Contractor shall attach Corporate Resolution authorizing Contractor's signature and authority to sign.

END OF SECTION 00140

ARTICLE 1 - INTRODUCTORY INFORMATION

1.01 DEFINED TERMS:

A. Terms used in these Instructions to Bidders and which are defined in the GENERAL CONDITIONS, have the meanings assigned to them in the GENERAL CONDITIONS.

B. Bid Documents shall include the following:

1. Bidding Requirements:

a. Invitation to Bid.
b. Instructions to Bidders.
c. Bid Form.
d. Bid Bond.

2. Bidder's Forms:

a. The Bidder's attention is called to the following additional forms which shall be completely filled out and submitted with the Bid:
b. Bidder's Qualifications Statement
c. List of Subcontractors

3. Contract Forms:

a. Agreement Between Owner and Contractor.
The Bidder's attention is called to the evidence of authority to sign and other documents which shall be submitted with the Agreement as applicable to the Business entity and noted in the Agreement.
b. Performance Bond.
c. Labor and Material Payment Bond (Payment Bond).

(1) The Performance and Payment Bonds shall be one hundred percent (100%).

4. Contract Conditions:

a. General Conditions.
b. Supplementary Conditions or Specifications

5. Specifications.

6. Addenda issued prior to receipt of Bids.

C. Certain additional items used in these Instructions to Bidders have the meanings indicated below which are applicable to both the singular and plural thereof.

1. Bidder – one who submits a Bid directly to Owner as distinct from a sub-bidder, who submits a Bid to a Bidder.

SECTION 00200 – INSTRUCTIONS TO BIDDERS (continued)

2. Issuing Office – the office from which the Bid Documents are to be issued and where the bidding procedures are to be administered.

3. Successful Bidder – the lowest, responsible, and responsive Bidder to whom Owner on the basis of Owner's evaluation as hereinafter provided makes an award.

1.02 COPIES OF BID DOCUMENTS:

A. Complete sets of the Bid Documents in the number and format as stated in the Invitation to Bid may be obtained from the City's Issuing Office.

B. Complete sets of Bid Documents shall be used in preparing Bids; neither Owner, nor Engineer assume any responsibility for errors or misinterpretations resulting from the use of incomplete sets of Bid Documents.

C. Owner and Engineer in making copies of Bid Documents available on the above terms do so only for the purpose of obtaining Bids on the Work and do not confer a license or grant for any other use.

1.03 QUALIFICATION OF BIDDERS:

A. Prequalification statements are not required. Owner will, however, evaluate the Bidder's qualifications following the opening of Bids. Evaluation criteria considered will include, but not be limited to:

1. Experience and performance records on similar work.

2. Financial responsibility.

3. Ability to supply construction equipment and personnel to complete the Work within the Contract Time.

4. Evidence of Bidder to do business in the state where the Project is located, or covenant to obtain such qualifications prior to award of the Contract.

B. Bidders may be requested to submit financial statement and other information relating to experience and financial responsibility after bids are received and before awarding a contract.

C. Only those Bids will be considered which are submitted by Bidders who show satisfactory completion of work of type and size comparable to the Work required by these Bid Documents.

1. A list of comparable projects, including pertinent information and identification of the owners, shall be submitted with the Bid.

SECTION 00200 – INSTRUCTIONS TO BIDDERS (continued)

2. See ARTICLE 5 – AWARD OF CONTRACT herein for additional requirements after opening of Bids.

D. Bidders must posses a valid Arkansas Contractor's License prior to the bid deadline and a current registration in good standing with the Arkansas Secretary of State prior to the bid award.

1.04 EXAMINATION OF CONTRACT DOCUMENTS AND SITE:

A. Before submitting a Bid, it is the responsibility of each Bidder:

1. To thoroughly examine the Contract Documents and other related data identified in the Bid Documents (including "technical data" referred to below).

2. To visit the Site, City and/or Utilities to become familiar with and satisfy Bidder as to the general, local, and Site conditions that may in any manner affect cost, progress, and performance of the Work.

3. To consider federal, state, and local laws, ordinances, rules, and regulations that may in any manner affect cost, progress, performance, and furnishing of the Work.

4. To study and carefully correlate Bidder's knowledge and observations with the Contract Documents and such other related data.

5. To promptly notify the Purchasing Division of all conflicts, errors, ambiguities, or discrepancies which Bidder has discovered in or between the Contract Documents and such other related documents.

B. Before submitting a Bid, each Bidder shall be responsible to obtain such additional or supplementary examinations, investigations, explorations, tests, studies, and data concerning conditions (surface, subsurface, and Underground Facilities) at or contiguous to the Site or otherwise, which may affect cost, progress, performance, and furnishing of the Work or which relate to any aspect of the means, methods, techniques, sequences, or procedures of construction to be employed by Bidder, including safety precautions and programs incident thereto or which Bidder deems necessary to determine its Bid for performing and furnishing the Work in accordance with the time, price, and other terms and conditions of the Contract Documents. This shall include local shipping facilities and availability of lands if applicable.

C. In the preparation of the Contract Documents, neither reports of explorations nor tests of any Hazardous Environmental Condition at the Site of the Work have been prepared.

SECTION 00200 – INSTRUCTIONS TO BIDDERS (continued)

D. Access to the Site:

1. On request, Owner will provide each Bidder access to the Site(s) to conduct such examinations, investigations, explorations, tests, and studies as each Bidder deems necessary for submission of his Bid. Bidder shall fill all holes, clean up, and restore the Site to its former conditions upon completion of such explorations, investigations, tests, and studies.

2. The lands upon which the Work is to be performed, rights-of-way, and easements for access thereto and other lands designated for use by Contractor in performing the Work are identified in the Contract Documents. All additional lands and access thereto required for temporary construction facilities, construction equipment, or storage of Materials and Equipment to be incorporated in the Work are to be obtained and paid for by Contractor. Easements for permanent structures or permanent changes in existing facilities are to be obtained and paid for by Owner unless otherwise provided in the Contract Documents.

3. Property owners affected by the Work are named on the Drawings where known, but the accuracy of such ownership is not guaranteed. Bidders shall verify and make their own arrangements with such property owners for any access needed in connection with the preparation of Bids.

E. The submission of a Bid will constitute an incontrovertible representation by the Bidder that he has complied with every requirement of this paragraph "Examination of Contract Documents and Site," and that the Bid Documents are sufficient in scope and detail to indicate and convey understanding of all terms and conditions for performance and furnishing of the Work.

1.05 INTERPRETATIONS, MODIFICATIONS, AND ADDENDA:

A. Any Bidder who discovers ambiguities, inconsistencies, or errors or is in doubt as to the meaning or intent of any part of the Bid Documents shall promptly request an interpretation from the Purchasing Division. Interpretations or clarifications considered necessary by Engineer in response to such requests will be issued by Addenda.

B. Addenda may also be issued to modify the Bid Documents as deemed advisable by Owner or Engineer.

C. Only questions answered by formal written Addenda will be binding. Oral and other interpretations or clarifications will be without legal effect.

1.06 PREBID CONFERENCE:

A. A Pre-Bid Conference will be held in accordance with the Invitation to Bid.

SECTION 00200 – INSTRUCTIONS TO BIDDERS (continued)

1.07 LABOR-RELATED REGULATIONS:

A. Pursuant to Arkansas Code Annotated 22-9-203, the City of Fayetteville encourages all qualified minority and women business enterprises to bid on and receive contracts for goods, services, and construction. Also, City of Fayetteville encourages all general contractors to subcontract portions of their contract to qualified, small, minority, and women business enterprises.

ARTICLE 2 - BASIS OF BIDDING

2.01 SPECIFIED EQUIPMENT AND MATERIALS:

A. Substitutions will be considered only after the Effective Date of the Agreement and as set forth in the GENERAL CONDITIONS.

2.02 INDIRECT COSTS:

A. Taxes:

1. All applicable sales, use, compensating, or other taxes to be paid or withheld by Bidder, now imposed by any taxing authority, on Equipment and Materials to be incorporated in the Work, and on any or all other cost items entering into the Contract Price, shall be included in the Bid price.

2. The Bidder shall include all such taxes except those on Equipment and Materials, if any, furnished by Owner or others, or exempted by the state, and Bidder shall furnish taxing authorities any information or reports pertaining thereto as required.

B. The cost of all construction licenses, building and other permits, and governmental inspections required by public authorities for performing the Work, which are applicable at the time Bids are opened and which are not specified to be obtained by Owner, shall be included in the Bid price. Fees for permits issued by the City will be waived, but permits are still required where necessary.

C. The cost of all royalties and license fees on Equipment and Materials to be furnished and incorporated in the Work shall be included in the Bid price.

D. Tests, inspections, and related activities called for throughout the Bid Documents are a responsibility of Contractor unless specified otherwise. The Bid shall include all costs arising from such responsibility.

E. The cost of all electrical, water, gas, telephone, sanitary, and similar facilities and services required by Contractor in performing the Work shall be included in the Bid price unless specified otherwise.

SECTION 00200 – INSTRUCTIONS TO BIDDERS (continued)

2.03 SUBCONTRACTORS:

A. No Bid shall be based upon aggregate of Subcontractors performing more than 60 percent of the total Work.

B. The experience, past performance, and ability of each proposed Subcontractor will be considered in the evaluation of Bids. Any Subcontractor so requested shall be required to furnish experience statements prior to the Notice of Awards.

C. No Contractor shall be required to employ any Subcontractor, other person, or organization against whom Contractor has reasonable objection. Owner or Engineer may accept or reject Subcontractors in accordance with Paragraph 6.05 of the GENERAL CONDITIONS.

2.04 CONTRACT TIMES:

A. The number of days within which, or the dates by which, the Work is to achieve Substantial Completion and also final completion and be ready for final payment shall be as stated in the Agreement.

B. Provisions for liquidated damages, if any, are as set forth in the Agreement.

ARTICLE 3 - BIDDING PROCEDURE

3.01 PREPARATION OF BID:

A. One set of bound documents included with the officially provided set of drawings (if any) and specifications shall be used for the Bid.

B. The Bid Forms shall be filled out in detail and signed by the Bidder.

C. Bids by partnerships shall be executed in the partnership name and signed by a partner whose title shall appear under his signature, and the official address of the partnership shall be shown below the signature.

D. Bids by corporations, corporate entities and/or LLC's shall be executed in the corporate name by the president or a vice president (or other corporate officer accompanied by evidence of authority to sign), and the corporate seal shall be affixed and attested by the secretary or an assistant secretary. If Contractor is a corporation, corporate entity or LLC, Contractor shall attach Corporate Resolution authorizing Agent for Service process authority to sign. The corporate address and state of incorporation shall be shown below the signature.

E. Names of all persons signing shall be printed below their signatures.

F. A power of attorney shall accompany the signature of anyone not otherwise authorized to bind the Bidder.

SECTION 00200 – INSTRUCTIONS TO BIDDERS (continued)

G. The Bid shall contain an acknowledgement of receipt of all Addenda, the numbers of which shall be filled in on the Bid Form.

H. The address to which communications regarding the Bids are to be directed shall be shown.

3.02 METHOD OF BIDDING:

A. Bids will be received on a Unit Prices basis as set forth in the Bid Form.

B. Firm Bids are required.

C. Schedule of Unit Prices:

1. The Bidder shall complete the Unit Price Bid Schedule included in the Bid (and shall accept all fixed Unit Prices listed therein).

2. The total Bid price will be determined as the sum of the products of the estimated quantity of each item and the Unit Price set forth in the Unit Price Bid Schedule. The final Contract Price shall be subject to adjustment according to final measured, used, or delivered quantities.

3.03 SUBCONTRACTORS INFORMATION SUBMITTED WITH BID:

Bidders shall submit to Owner with the Bid, the List of Subcontractors contained in the Project Manual as Document 00430, completed with names of all such Subcontractors, Suppliers, and other persons and organizations proposed for those portions of the Work for which such identification is required. The list shall be supplemented by an experience statement with pertinent information regarding similar projects and other evidence of qualification for each such Subcontractor, Supplier, person, or organization, if requested by Engineer. If, after due investigation, Owner or Engineer has reasonable objection to any proposed Subcontractor, Supplier, or other person or organization, Owner may, before the Notice of Award is given, request the apparent Successful Bidder to submit an acceptable substitute without an increase in the Bid. If the apparent Successful Bidder declines to make any such substitution, Owner may award the Contract to the next lowest Bidder that proposes to use acceptable Subcontractors, Suppliers, and other persons and organizations. The declining to make requested substitutions will not constitute grounds for sacrificing the bid security of any Bidder. Any Subcontractor, Supplier, or other person or organization listed and to whom Owner or Engineer does not make written objection prior to the giving of the Notice of Award will be deemed acceptable to Owner and Engineer subject to revocation as provided in Paragraph 6.05 of the General Conditions.

3.04 FORMS AND DOCUMENTS TO BE SUBMITTED:

A. The following forms shall be completed and submitted with the Bid:

SECTION 00200 – INSTRUCTIONS TO BIDDERS (continued)

1. DOCUMENT 00140 BIDDER'S QUALIFICATIONS STATEMENT

2. DOCUMENT 00400 BID FORM

3. Bid Security as bank cashier's check FROM A FINANCIAL INSTITUTION LOCATED IN THE STATE OF Arkansas, or Bid Bond (DOCUMENT 00410)

4. DOCUMENT 00430, LIST OF SUBCONTRACTORS

3.05 BID SECURITY:

A. Each Bid shall be accompanied by Bid security, payable to Owner, in the amount of five-percent (5%) of the total Bid.

B. The required security shall be in the form of a bank cashier's check from a financial institution located in the state of Arkansas or a Bid Bond on the form prescribed by the AIA, Document A310, or on similar form attached.

C. Bid Bond shall be executed by the bidder and a surety meeting the requirements set forth for "Surety Bonds" in the GENERAL CONDITIONS.

D. Bid security of the Successful Bidder will be retained until Bidder has executed the Agreement and furnished the required surety Bonds as set forth in the GENERAL CONDITIONS, whereupon Bid security will be returned. If the Successful Bidder fails to execute the Agreement and furnish the surety Bonds within 15 days after the date of Notice of Award, Owner may annul the Notice of Award, and Bid security of that Bidder will be forfeited to Owner.

E. The Bid security of any Bidder whom Owner believes to have a reasonable chance of receiving the award may be retained by Owner until the earlier of 10 days after the Effective Date of the Agreement and the required surety Bonds furnished, or the 91st day after the Bid opening. Bid security of other Bidders will be returned within 10 days of the bid opening.

3.06 SUBMISSION OF BID:

A. Bids shall be submitted at the time and place designated in the Invitation to Bid.

B. If submitting a physical bid, Bid Documents with accompanying Bid security and other required information shall be enclosed in an opaque sealed envelope marked with the following:

1. Project name
2. Bid number
3. Name and address of Bidder
4. Contractor's license number

SECTION 00200 – INSTRUCTIONS TO BIDDERS (continued)

C. If the Bid is sent by mail or other delivery system, the sealed envelope shall be enclosed in a separate envelope with the notation "Sealed Bid Enclosed" on the face thereof.

3.07 MODIFICATION OR WITHDRAWAL OF BIDS:

A. Bids may be modified or withdrawn by an appropriate document duly executed (in the manner that Bid must be executed) and delivered to the place where Bids are to be submitted at any time prior to the opening of Bids.

B. If, within 24 hours after Bids are opened, any Bidder files a duly signed written notice with Owner and promptly thereafter demonstrates to the reasonable satisfaction of Owner that there was a material and substantial mistake in the preparation of his Bid, that Bidder may withdraw its Bid, and the Bid security will be returned. Thereafter, that Bidder will be disqualified from further bidding on the Work to be provided under the Contract Documents.

ARTICLE 4 - OPENING OF BIDS

4.01 OPENING OF BIDS:

A. Bids will be opened and (unless obviously non-responsive) read aloud publicly at a location indicated by the Purchasing Division. An abstract of the amounts of the base Bids will be made available to Bidders after the opening of Bids.

B. All Bids shall remain open for a period of 90 days after Bids are opened, but Owner may, at his sole discretion, release any Bid and return the Bid security at any time prior to that date.

ARTICLE 5 - AWARD OF CONTRACT

5.01 OWNER's RIGHT TO REJECT BIDS:

A. Owner reserves the right to reject any or all Bids, including without limitation the rights to reject any or all nonconforming, non-responsive, unbalanced, or conditional Bids and to reject the Bid of any Bidder if Owner believes that it would not be in the best interest of the Project to make an award to that Bidder, whether because the Bid is not responsive or the Bidder is unqualified or of doubtful financial ability or fails to meet any other pertinent standard or criteria established by Owner. Owner also reserves the right to waive all informalities not involving price, times, or changes in the Work and to negotiate Contract terms with the Successful Bidder. (Discrepancies between the multiplication of units of Work and Unit Prices will be resolved in favor of the Unit Prices.) Discrepancies between the indicated sum of any column of figures and the correct sum thereof will be resolved in favor of the correct sum. Discrepancies between words and figures will be resolved in favor of the words.

SECTION 00200 – INSTRUCTIONS TO BIDDERS (continued)

B. All Bidders must agree that such rejection shall be without liability on the part of the Owner nor shall the Bidders seek recourse of any kind against the Owner because of such rejections. The filing of any Bid shall constitute an agreement of the Bidder to these conditions.

5.02 EVALUATION OF BIDS:

A. In evaluating Bids, Owner will consider the qualifications of the Bidders, whether or not the Bids comply with the prescribed requirements (and such Material Submittals, Alternates, Unit Prices) and other data, as may be requested in the Bid Form or prior to the Notice of Award.

B. Owner may consider the qualifications and experience of Subcontractors, Suppliers, and other persons and organizations proposed for those portions of the Work as to which the identity of Subcontractors, Suppliers, and other persons and organizations is requested per Paragraph 5.02E of this document.

C. Owner may conduct such investigations as he deems necessary to assist in the evaluation of any Bid and to establish the responsibility, qualifications, and financial ability of the Bidders, proposed Subcontractors, and other persons and organizations to perform and furnish the Work in accordance with the Contract Documents to Owner's satisfaction within the prescribed time.

D. Owner reserves the right to reject the Bid of any Bidder who does not pass any such evaluation to Owner's satisfaction.

E. Within 10 days after Bids are opened, and if requested by the Owner or the Engineer, the apparent Successful Bidder, and any other Bidder so requested, shall submit supplemental information including an experience statement with pertinent information regarding similar projects and other evidence of qualification for each such Subcontractor, Supplier, person, or organization, proposed by the Bidder for consideration as specified in ARTICLE 3 paragraph 3.03 above. The use of Subcontractors listed by Bidder (Document 00430) and accepted by Owner prior to the Notice of Award will be required in the performance of the Work.

F. Within 10 days after the Bids are opened if requested by the Owner or the Engineer, the apparent Successful Bidder, and any other Bidder so requested, shall submit an itemized breakdown of any lump sum portion of its Bid. This breakdown must include a separate item for each major category of work and each major piece of equipment. This breakdown may or may not be reflected in subsequent time schedule submittals.

G. The award of the Contract, if it is awarded, will be to the lowest, responsive, responsible Bidder whose evaluation by Owner indicates to Owner that the award will be in the best interest of Project and Owner.

SECTION 00200 – INSTRUCTIONS TO BIDDERS (continued)

5.03 NOTICE OF AWARD:

A. After considering the basis of award and evaluation of Bids, if the Contract is to be awarded, Owner shall within 90 days after the date of opening Bids notify the Successful Bidder of acceptance of his Bid (indicating which, if any, Alternate Bids have been accepted).

ARTICLE 6 - SIGNING OF AGREEMENT

6.01 When Owner gives Notice of Award to Successful Bidder, Engineer will issue the required number of unbound, unsigned counterparts of the Agreement and other Contract Documents to Successful Bidder.

6.02 Within 30 days thereafter, Contractor (Successful Bidder) shall sign all copies of the Agreement dating the Agreement the Date of City Council Approval, power of attorney documents, and other required documents, and deliver all copies to the Owner.

6.03 Within 15 days thereafter, unless otherwise noted in writing by Owner to Bidder, Owner will execute all copies of the Agreement and insert the properly executed and recorded Bonds, power of attorney documents, and other required documents in the appropriate places. The Performance Bond and the Payment Bond shall be one hundred percent (100%) and shall be provided to the City after the bonds are filed and file marked at the Washington County Circuit Clerk's office. Owner will provide the executed Contract Documents to Engineer for binding and distribution as required. Each duly executed counterpart will be accompanied by a complete set of Drawings with appropriate identification.

END OF SECTION 00200

THIS PAGE INTENTIONALLY LEFT BLANK

DOCUMENT 00400-BID FORM

Contract Name: Noland Wastewater Treatment Plant Switchgear Replacement

Bid Number: 26-30, Construction – Noland WWTF Switchgear

BID TO:
Owner: City of Fayetteville, Arkansas
113 West Mountain Street
Fayetteville, Arkansas 72701

BID FROM:
Bidder: _____
_____
_____
_____

ARTICLE 1 – INTENT

1.01 The undersigned Bidder proposes and agrees, if this Bid is accepted, to enter into an agreement with Owner in the Form included in the Contract Documents to perform and furnish all Work as specified or indicated in the Contract Documents for the Bid price and within the Bid time indicated in this Bid and in accordance with the other terms and conditions of the Contract Documents.

ARTICLE 2 – TERMS AND CONDITIONS

2.01 Bidder accepts all of the terms and conditions of the Invitation to Bid and Instructions to Bidders, including without limitation those dealing with the disposition of Bid security. This Bid will remain subject to acceptance for 90 days after the day of Bid opening. Bidder will sign and deliver the required number of counterparts of the Agreement with the Bonds and other documents required by the Bidding Requirements within 15 days after the date of Owner's Notice of Award.

ARTICLE 3 – BIDDERS REPRESENTATIONS

3.01 In submitting this Bid, Bidder represents, as more fully set forth in the Agreement, that:

A. Bidder has examined and carefully studied the Bidding Documents, and the following Addenda, receipt of all which is hereby acknowledged:

Number	Date
_____	_____
_____	_____
_____	_____
_____	_____

DOCUMENT 00400-BID FORM (continued)

B. Bidder has visited the Site, City or Utilities and become familiar with and is satisfied as to the general, local and Site conditions that may affect cost, progress, performance, and furnishing of the Work.

C. Bidder is familiar with and is satisfied as to all federal, state, and local Laws and Regulations that may affect cost, progress, performance, and furnishing of the Work.

D. Bidder has carefully studied all: (1) reports of explorations and tests of subsurface conditions at or contiguous to the Site and all drawings of physical conditions in or relating to existing surface or subsurface structures at or contiguous to the Site; and (2) reports and drawings of a Hazardous Environmental Condition, if any, at the Site. Bidder acknowledges that such reports and drawings are not Contract Documents and may not be complete for Bidder's purposes. Bidder acknowledges that Owner and Engineer do not assume responsibility for the accuracy or completeness of information and data shown or indicated in the Bid Documents with respect to Underground Facilities at or contiguous to the site.

E. Bidder has obtained and carefully studied (or assumes responsibility for having done so) all such additional or supplementary examinations, investigations, explorations, tests, studies, and data concerning conditions (surface, subsurface, and Underground Facilities) at or contiguous to the site or otherwise which may affect cost, progress, performance, or finishing of the Work or which relate to any aspect of the means, methods, techniques, sequences, and procedures of construction to be employed by Bidder and safety precautions and programs incident thereto.

F. Bidder does not consider that any additional examinations, investigations, explorations, tests, studies, or data are necessary for the determination of this Bid for performing and furnishing of the Work in accordance with the times, price and other terms and conditions of the Contract Documents.

G. Bidder is aware of the general nature of work to be performed by Owner and others at the Site that relates to Work for which this Bid is submitted as indicated in the Contract Documents.

H. Bidder has correlated the information known to Bidder, information and observations obtained from visits to the Site, reports, and drawings identified in the Contract Documents, and all additional examinations, investigations, explorations, tests, studies and data with the Contract Documents.

I. Bidder has given the Purchasing Division written notice of all conflicts, errors, ambiguities, or discrepancies that Bidder has discovered in the Contract Documents and the written resolution thereof by the Purchasing Division is acceptable to Bidder.

J. The Contract Documents are generally sufficient to indicate and convey understanding of all terms and conditions for performing and furnishing the Work for which this Bid is submitted.

DOCUMENT 00400-BID FORM (continued)

K. This Bid is genuine and not made in the interest of or on behalf of any undisclosed person, firm, or corporation and is not submitted in conformity with any agreement or rules of any group, association, organization, or corporation; Bidder has not directly or indirectly induced or solicited any other Bidder to submit a false or sham bid; Bidder has not solicited or induced any person, firm, or a corporation to refrain from bidding; and Bidder has not sought by collusion to obtain for himself any advantage over any other Bidder or over Owner.

L. Bidder will perform the Work in compliance with all applicable trench safety standards set forth in Occupational Safety and Health Administration (OSHA) Part 1926 – Subpart P – Excavations.

ARTICLE 4 – BID PRICE

4.01 Bidders are required to provide pricing for all line items.

4.02 The City intends to award this contract to the lowest qualified responsive responsible bidder based on the total base bid as long as the base bid amount falls within the amount of funds certified for the project plus 25%.

4.03 In the even no bid falls within the amount of funds certified for the project plus 25%, all bids shall be rejected and become confidential.

4.04 Bidder shall complete the Work in accordance with the Contract Documents for the price(s) indicated in the Bidder's electronic bid submittal. Bidders shall refer to the City's online bidding portal for unit price bid and deductive alternate input.

ARTICLE 5 – CONTRACT TIMES

5.01 Bidder agrees that the Work will be substantially completed and completed and ready for final payment within the number of calendar days indicated in the Agreement.

5.02 Bidder accepts the provisions of the Agreement as to liquidated damages in the event of failure to complete the Work within the times specified in the Agreement

ARTICLE 6 – BID CONTENT

6.01 The following documents are attached to and made a condition of this Bid:

A. Required Bid Security in the form of a cashier's check from a financial institution located in the State of Arkansas or a Bid Bond and in the amount of _____Dollars ($_____)

DOCUMENT 00400-BID FORM (continued)

B. A tabulation of Subcontractors and other persons and organizations required to be identified in this Bid.

ARTICLE 7 - COMMUNICATIONS

7.01 Communications concerning this Bid shall be addressed to the Bidder as Follows:

_____

_____

_____

Email _____

Phone No._____

Fax No._____

ARTICLE 8 – TERMINOLOGY

8.01 The terms used in the Bid which are defined in the GENERAL CONDITIONS or Instructions to Bidders will have the meanings assigned to them.

ARTICLE 9 – CONTRACTORS ASSURANCES AND EXECUTION/SIGNATURE

9.01 Contractor's Assurances.

As the authorized representative of the individual, incorporation, or corporation (hereinafter referred to as the company) bidding on or participating in the project, I certify that I have read and understand the requirements of the General and/or Supplemental Conditions and that the principles, agents and employees of the company will comply with these requirements including all relevant statutes and regulations issued pursuant thereto. I further certify as the authorized agent of the company that:

EQUAL OPPORTUNITY I will comply with all requirements of 41 CFR Chapter 60 and Executive Orders 11246 and 11375, including inclusion of all required equal opportunity clauses in each sub-contract awarded in excess of $10,000 and I will furnish a similar statement from each proposed sub-contractor, when appropriate. I will also comply with all Equal Employment Opportunity requirements as defined by Section 504 of the Rehabilitation Act of 1975; and Section 13 of the Federal Water Pollution Control Act Amendments of 1972 regarding sex discrimination.

LABOR STANDARDS I will comply with the Labor Standards Provisions contained in the Contract Documents and furnish weekly payrolls and certifications as may be required by the City of Fayetteville to affirm compliance. I will also require that weekly payrolls be submitted to the City of Fayetteville for all subcontracts in excess of $2,000.

DOCUMENT 00400-BID FORM (continued)

OSHA REQUIREMENTS I will comply with the Department of Labor Safety and Health Regulations promulgated under Section 107 of the Contract Work Hours and Safety Standard Act (40 U.S.C. 327-333) in the performance of the contract.

PROCUREMENT PROHIBITIONS As required by Executive Order 11738, Section 306 of the Clean Air Act and Section 508 of the Clean Water Act, I certify that I will not procure goods and services from persons who have been convicted of violations of either law if the goods or services are to be produced by the facility that gave rise to the violation.

DEBARMENT AND SUSPENSION I certify that to the best of my knowledge and belief that the company I represent and its principals:

(a) Are not presently debarred, suspended, proposed for debarment, declared ineligible, or voluntarily excluded from covered transactions by any Federal department or agency;

(b) Have not within a three year period preceding this proposal been convicted of or had a civil judgement rendered against them for commission of fraud or a criminal offense in connection with obtaining, attempting to obtain, or performing a public (Federal, State, or; local) transaction or contract under a public transaction; violation of Federal or State antitrust statutes or commission of embezzlement, theft, forgery, bribery, falsification or destruction of records, making false statements, or receiving stolen property.

(c) Are not presently indicted for or otherwise criminally or civilly charged by a government entity (Federal, State, or local) with commission of any of the offenses enumerated in paragraph (b) of this certification; and

(d) Have not within a three-year period preceding this application/proposal had one or more public transactions (Federal, State, or local) terminated for cause or default.

I understand that a false statement on this certification regarding debarment and suspension may be grounds for rejection of this proposal or termination of the award. In addition, under 18 USC Sec. 1001, a false statement may result in a fine. I further certify that I will obtain a similar certification for each subcontract awarded in excess of $25,000.

DOCUMENT 00400-BID FORM (continued)

9.02 Execution/Signatures for Contractor Assurance above, Bid and Bid Form:

SUBMITTED on _____, 20___

Arkansas State Contractors License No. _____

If Bidder is:

An Individual

Name (type or printed): _____

By: _____(SEAL)

(Individual's Signature)

Doing business as: _____

Business address: _____

City, State, Zip: _____

Phone No: _____Fax No. _____

Email Address: _____

A Partnership

Partnership Name:_____

By: _____(SEAL)

(Signature of general partner-attach evidence of authority to sign))

Name (type or printed: _____

Business address: _____

City, State, Zip: _____

Phone No: _____Fax No. _____

Email Address: _____

DOCUMENT 00400-BID FORM (continued)

A Corporation or Corporate entity including Limited Liability Company (LLC)

Corporation Name:_____(SEAL)

State of Incorporation: _____

Type (General Business, Professional, Service, Limited Liability):

_____

By: _____

(Signature-attach evidence of authority to sign)

Name (type or printed: _____

Title: _____

Attest: _____

(Signature of Corporate Secretary)

_____

Business address: _____

Phone No: _____Fax No. _____

Email Address: _____

Tax ID No.:_____

END OF DOCUMENT 00400

THIS PAGE INTENTIONALLY LEFT BLANK

DOCUMENT 00410 – BID BOND

KNOW ALL MEN BY THESE PRESENTS: that we

_____

_____

_____

as Principal, hereinafter called the Principal, and

_____

_____

_____

a corporation duly organized under the laws of the State of _____ as Surety, hereinafter called Surety, are held and firmly bound unto

City of Fayetteville, Arkansas

113 West Mountain Street

Fayetteville, Arkansas 72701

as Obligee, hereinafter called Owner, in the sum of _____ _____ Dollars ($_____), for the payment of which sum, well and truly to be made, Principal and said Surety, bind ourselves, our heirs, executors, administrators, successors and assigns, jointly and severally, firmly by these presents.

WHEREAS, Principal has submitted a Bid for:

NOLAND WASTEWATER TREATMENT PLANT SWITCHGEAR REPLACEMENT,
BID 26-30, CONSTRUCTION – SWITCHGEAR REPLACEMENT.

NOW, THEREFORE, if the Owner shall accept the Bid of Principal and the Principal shall enter into a Contract with the Owner in accordance with the terms of such Bid, and give such Bond or Bonds as may be specified in the Bidding or Contract Documents with good and sufficient surety for the faithful performance of such Contract and for the prompt payment of labor and material furnished in the prosecution thereof, or in the event of the failure of Principal to enter such Contract and give such Bond or Bonds, if the Principal shall pay to the Owner the difference not to exceed the penalty hereof between the amount specified in said Bid and such larger amount for which the Owner may in good faith contract with another party to perform the Work covered by said Bid, then this obligation shall be null and void, otherwise to remain in full force and effect.

DOCUMENT 00410 – BID BOND (continued)

Signed and sealed this _____ day of _____ 20___.

PRINCIPAL (CORPORATE SEAL)

_____

By _____

_____

SURETY

_____

By _____

_____

ATTORNEY-IN-FACT (CORPORATE SEAL)

_____

_____

(This Bond shall be accompanied with
Attorney-in-Fact's authority from Surety)

END OF DOCUMENT

DOCUMENT 00430 – LIST OF SUBCONTRACTORS

In compliance with the Instructions to Bidders and other Contract Documents, the undersigned submits the following names of Subcontractors to be used in performing the Work for:

NOLAND WASTEWATER TREATMENT PLANT SWITCHGEAR REPLACEMENT,
Bid 26-30, Construction – Noland WWTF Switchgear.

Bidder certifies that all Subcontractors listed are eligible to perform the Work.

Subcontractor's Work	Subcontractor's Name and Address	Expected Percentage or Value
Clearing/Earthwork		
SWPPP/Erosion Control		
Concrete		
Masonry		
Roofing		
Electrical		
Material Testing		
Other (designate)		

NOTE: This form must be submitted in accordance with the Instructions to Bidders.

Bidder's Signature

END OF DOCUMENT

THIS PAGE INTENTIONALLY LEFT BLANK

SECTION 00500 – AGREEMENT BETWEEN OWNER AND CONTRACTOR

Contract Name/Title: Noland Wastewater Treatment Plant Switchgear Replacement
Contract No.: 26-30, Construction – Noland WWTF Switchgear

THIS AGREEMENT is dated as of the _____ day of _____ in the year 20__ by and between The City of Fayetteville, Arkansas and _____ (hereinafter called Contractor).

ARTICLE 1 - WORK

1.01 Contractor shall complete all Work as specified or indicated in the Contract Documents. The work under this Agreement includes, but is not limited to:

A. Construction of the Medium Voltage Paralleling Switchgear Building including site paving and restoration.

B. Installation of the pre-purchased Medium Voltage Paralleling Switchgear including unloading and storage as needed.

C. Integration of the Medium Voltage Paralleling Switchgear with the existing electrical distribution system.

1.02 The Contractor agrees to perform the work described in the Contract Documents and comply with the terms therein for the amounts shown in the Bid Proposal.

1.03 Any use of a third party dumpster or roll off container shall be procured from the City of Fayetteville Recycling and Trash Collection Division. Use of a Non-City dumpster or roll off container is not allowed.

1.04 Contractor is responsible for obtaining all applicable permits. The fees for City of Fayetteville (only) issued permits shall be waived.

1.05 The Contract may include work in City of Fayetteville right-of-way, ARDOT (State) right-of-way, railroad right-of-way and in General or Utility Easements.

ARTICLE 2 - ENGINEER

2.01 The Contract Documents have been prepared by Hawkins-Weir Engineers, Inc. Hawkins-Weir Engineers, Inc. assumes all duties and responsibilities, and has the rights and authority assigned to Engineer in connection with completion of the Work in accordance with the Contract Documents.

SECTION 00500 – AGREEMENT
BETWEEN OWNER AND CONTRACTOR (continued)

2.02 The City of Fayetteville assumes all duties and responsibilities, and has the rights and authority assigned to The City of Fayetteville as Owner in connection with completion of the Work in accordance with the Contract Documents.

ARTICLE 3 - CONTRACT TIME

3.01 TIME OF THE ESSENCE:

A. All time limits for milestone, if any, Substantial Completion and completion and readiness for final payment as stated in the Contract Documents are of the essence of the Contract.

3.02 DATES FOR COMPLETION AND FINAL PAYMENT:

A. The Work shall be substantially completed within 240 calendar days after the date when the Contract Times commence to run as provided in the GENERAL CONDITIONS, and final completion and ready for final payment within 270 calendar days after the date when the Contract Times commence to run as provided in the GENERAL CONDITIONS.

3.03 LIQUIDATED DAMAGES:

A. Owner and Contractor recognize that time is of the essence of this Agreement and that The City of Fayetteville will suffer financial loss if the Work is not completed within the time specified above, plus any extensions thereof allowed in accordance with the GENERAL CONDITIONS. The parties also recognize the delays, expense, and difficulties involved in proving the actual loss suffered by The City of Fayetteville if the Work is not Substantially Completed on time. Accordingly, instead of requiring any such proof, The City of Fayetteville and Contractor agree that as liquidated damages for delay (but not as a penalty) Contractor shall pay The City of Fayetteville Seven Hundred Fifty Dollars ($750.00) for each calendar day that expires after the time specified above in Paragraph 3.02 for Substantial Completion until the Work is Substantially Complete. After Substantial Completion, if Contractor shall neglect, refuse, or fail to complete the remaining Work within the time specified in Paragraph 3.02 for completion and readiness for final payment or any proper extension thereof granted by The City of Fayetteville, Contractor shall pay The City of Fayetteville Five Hundred Dollars ($500.00) for each calendar day that expires after the time specified for completion and readiness for final payment.

SECTION 00500 – AGREEMENT BETWEEN OWNER AND CONTRACTOR (continued)

ARTICLE 4 - CONTRACT PRICE

4.01 The CITY OF FAYETTEVILLE agrees to pay, and the CONTRACTOR agrees to accept, as full and final compensation for all work done under this agreement, the amount based on the unit prices bid in the Proposal which is hereto attached, for the actual amount accomplished under each pay item, said payments to be made in lawful money of the United States at the time and in the manner set forth in the Specifications.

4.02 As provided in the Contract estimated quantities are not guaranteed, and determinations of actual quantities and classifications are to be made by ENGINEER as provided in the General Conditions. Unit prices have been computed as provided in the Contract Documents.

4.03 Changes, modifications, or amendments in scope, price or fees to this contract shall not be allowed without a prior formal contract amendment approved by the Mayor and the City Council in advance of the change in scope, cost or fees.

1. Further, there shall be no changes to the scope and/or contract documents without prior written approval of the Engineer of Record and the City's designated Professional Engineer.

ARTICLE 5 - PAYMENT PROCEDURES

5.01 SUBMITTAL AND PROCESSING OF PAYMENTS:

A. Contractor shall submit Applications for Payment in accordance with the GENERAL CONDITIONS. Applications for Payment will be processed by Engineer as provided in the GENERAL CONDITIONS.

5.02 PROGRESS PAYMENTS, RETAINAGE:

A. The City of Fayetteville shall make progress payments on account of the Contract Price on the basis of Contractor's Applications for Payment as recommended by Engineer, on or about the 15th day of each month during construction. All such payments will be measured by the schedule of values established in the GENERAL CONDITIONS (and in the case of Unit Price Work based on the number of units completed) or, in the event there is no schedule of values, as provided in the General Requirements.

SECTION 00500 – AGREEMENT
BETWEEN OWNER AND CONTRACTOR (continued)

1. Prior to Substantial Completion, progress payments will be made in an amount equal to the percentage indicated below, but, in each case, less the aggregate of payments previously made and less such amounts as Engineer shall determine, or The City of Fayetteville may withhold, in accordance with the GENERAL CONDITIONS.
   a. 95% of Work Completed (with the balance being retainage). If Work has been 50% completed as determined by Engineer, and if the character and progress of the Work have been satisfactory to The City of Fayetteville and Engineer, The City of Fayetteville on recommendation of Engineer, may determine that as long as the character and progress of the Work subsequently remain satisfactory to them, there will be no additional retainage on account of Work subsequently completed, in which case the remaining progress payments prior to Substantial Completion will be an amount equal to 100% of the Work Completed less the aggregate of payments previously made; and
   b. 100% of Equipment and Materials not incorporated in the Work but delivered, suitably stored, and accompanied by documentation satisfactory to The City of Fayetteville as provided in the GENERAL CONDITIONS.

5.03 FINAL PAYMENT:

A. Upon final completion and acceptance of the Work in accordance with the GENERAL CONDITIONS, The City of Fayetteville shall pay the remainder of the Contract Price as recommended by Engineer and as provided in the GENERAL CONDITIONS.

ARTICLE 6 - CONTRACTOR'S REPRESENTATIONS

6.01 In order to induce The City of Fayetteville to enter into this Agreement, Contractor makes the following representations:

A. Contractor has examined and carefully studied the Contract Documents including the Addenda and other related data identified in the Bid Documents.

SECTION 00500 – AGREEMENT
BETWEEN OWNER AND CONTRACTOR (continued)

B. Contractor has visited the Site(s) and become familiar with and is satisfied as to the general, local, and Site conditions that may affect cost, progress, performance, and furnishing of the Work.

C. Contractor is familiar with and is satisfied as to all federal, state, and local Laws and Regulations that may affect cost, progress, performance, and furnishing of the Work.

D. Contractor has carefully studied all:

(1) Reports of explorations and tests of subsurface conditions at or contiguous to the Site and all drawings of physical conditions in or relating to existing surface or subsurface structures at or contiguous to the Site; and

(2) Reports and drawings of a Hazardous Environmental Condition, if any, at the Site. Contractor acknowledges that The City of Fayetteville and Engineer do not assume responsibility for the accuracy or completeness of information and data shown or indicated in the Contract Documents with respect to Underground Facilities at or contiguous to the Site.

E. Contractor has obtained and carefully studied (or assumes responsibility of having done so) all such additional supplementary examinations, investigations, explorations, tests, studies, and data concerning conditions (surface, subsurface, and Underground Facilities) at or contiguous to the Site or otherwise which may affect cost, progress, performance, and furnishing of the Work or which relate to any aspect of the means, methods, techniques, sequences, and procedures of construction to be employed by Contractor and safety precautions and programs incident thereto.

F. Contractor does not consider that any additional examinations, investigations, explorations, tests, studies, or data are necessary for the performing and furnishing of the Work at the Contract Price, within the Contract Times, and in accordance with the other terms and conditions of the Contract Documents.

G. Contractor is aware of the general nature of work to be performed by The City of Fayetteville and others at the Site that relates to the Work as indicated in the Contract Documents.

H. Contractor has correlated the information known to Contractor, information and observations obtained from visits to the Site, reports and drawings identified in the

SECTION 00500 – AGREEMENT
BETWEEN OWNER AND CONTRACTOR (continued)

Contract Documents, and all additional examinations, investigations, explorations, tests, studies, and data with the Contract Documents.

I. Contractor has given the Purchasing Division written notice of all conflicts, errors, ambiguities, or discrepancies that Contractor has discovered in the Contract Documents and the written resolution thereof by the Purchasing Division is acceptable to Contractor.

J. The Contract Documents are generally sufficient to indicate and convey understanding of all terms and conditions for performance and furnishing of the Work.

ARTICLE 7 - CONTRACT DOCUMENTS

7.01 CONTENTS:

A. The Contract Documents which comprise the entire Agreement between The City of Fayetteville and Contractor concerning the Work consist of the following and may only be amended, modified, or supplemented as provided in this Agreement and in the GENERAL CONDITIONS:

1. This Agreement.
2. Exhibits to this Agreement (enumerated as follows):
    a. Notice to Proceed.
    b. Contractor's Bid.
    c. Documentation submitted by Contractor prior to Notice of Award.
3. Performance, Payment, and other Bonds.
    a. The Performance and Payment Bonds shall be one hundred percent (100%).
    b. The Contractor shall file the Performance, Payment and Warranty Bonds at the Washington County Clerk’s office prior to providing a file marked copy of the filed Performance, Payment and Warranty Bonds to the Owner or Engineer.
4. General Conditions.
5. Supplementary Conditions.

SECTION 00500 – AGREEMENT
BETWEEN OWNER AND CONTRACTOR (continued)

6. Specifications consisting of divisions and sections as listed in Table of Contents of Project Manual.
7. Drawings consisting of a cover sheet and sheets as listed in the Table of Contents thereof (Drawings), with each sheet bearing the following general title:

   Paul Noland Wastewater Treatment Plant Paralleling Switchgear Replacement

8. Addenda numbers _____ inclusive.
9. The following which may be delivered or issued after the Effective Date of the Agreement and are not attached hereto: All Written Amendments and other documents amending, modifying, or supplementing the Contract Documents pursuant to the GENERAL CONDITIONS.

ARTICLE 8 - MISCELLANEOUS

8.01 TERMS:

A. Terms used in this Agreement which are defined in the GENERAL CONDITIONS shall have the meanings stated in the GENERAL CONDITIONS.

8.02 ASSIGNMENT OF CONTRACT:

A. No assignment by a party hereto of any rights under or interests in the Contract Documents will be binding on another party hereto without the written consent of the party sought to be bound; and specifically but without limitation, moneys that may become due and moneys that are due may not be assigned without such consent (except to the extent that the effect of this restriction may be limited by Law), and unless specifically stated to the contrary in any written consent to an assignment, no assignment will release or discharge the assignor from any duty or responsibility under the Contract Documents.

8.03 SUCCESSORS AND ASSIGNS:

A. The City of Fayetteville and Contractor each binds himself, his partners, successors, assigns, and legal representatives to the other party hereto, its partners, successors, assigns, and legal representatives in respect to all covenants, agreements, and obligations contained in the Contract Documents.

SECTION 00500 – AGREEMENT
BETWEEN OWNER AND CONTRACTOR (continued)

8.04 SEVERABILITY:

A. Any provision or part of the Contract Documents held to be void or unenforceable under any Law or Regulation shall be deemed stricken, and all remaining provisions shall continue to be valid and binding upon The City of Fayetteville and Contractor, who agree that the Contract Documents shall be reformed to replace such stricken provision or part thereof with a valid and enforceable provision that comes as close as possible to expressing the intention of the stricken provision.

8.05 FREEDOM OF INFORMATION ACT:

A. City contracts and documents prepared while performing city contractual work are subject to the Arkansas Freedom of Information Act. If a Freedom of Information Act request is presented to the City of Fayetteville, the contractor will do everything possible to provide the documents in a prompt and timely manner as prescribed in the Arkansas Freedom of Information Act (A.C.A. §25-19-101 et. seq.). Only legally authorized photocopying costs pursuant to the FOIA may be assessed for this compliance.

8.06 LIENS:

A. **No liens against this construction project are allowed.** Arkansas law (A.C.A. §§18-44-501 through 508) prohibits the filing of any mechanics of materialmen's liens in relation to this public construction project. Arkansas law requires and the contractor promises to provide and file with the Circuit Clerk of Washington County a bond in a sum equal to the amount of this contract. Any subcontractor or materials supplier may bring an action for non-payment or labor or material on the bond. The contractor promises to notify every subcontractor and materials supplier for this project of this paragraph and obtain their written acknowledgement of such notice prior to commencement of the work of the subcontractor or materials supplier.

IN WITNESS WHEREOF, The City of Fayetteville and Contractor have signed this Agreement in quadruplicate. One counterpart each has been delivered to Contractor. Three counterparts each has been retained by The City of Fayetteville. All portions of the Contract Documents have been signed, initialed, or identified by The City of Fayetteville and Contractor.

SECTION 00500 – AGREEMENT
BETWEEN OWNER AND CONTRACTOR (continued)

This Agreement will be effective on _____, 20___, which is the Effective Date of the Agreement.

CONTRACTOR:	CITY OF FAYETTEVILLE
By: _____	By: _____
(Type or legibly print)	(Type or legibly print)
_____	_____
(Signature)	(Signature)
Title: _____	Title: Mayor

Contractor shall attach evidence of authority to sign.

If Contractor is a corporation, corporate entity or LLC, Contractor shall attach Corporate Resolution authorizing Contractor's signature and execution of Agreement.

Further if Contractor is a corporation, corporate entity or LLC, Contractor shall also attach a copy of the Contractor's Articles of Incorporation and a copy form the Arkansas State Secretary of State to document that the corporation, corporate entity or LLC is in current "Good Standing" with the State of Arkansas and such entity is permitted to perform work in the State of Arkansas.

(SEAL)	(SEAL)
Attest _____	Attest _____

SECTION 00500 – AGREEMENT
BETWEEN OWNER AND CONTRACTOR (continued)

Address for giving notices

_____

_____

Address for giving notices

113 W. Mountain St.

Fayetteville, AR 72701

License No. _____

Agent for Service of process

_____

(Type or legibly print)

_____

(Signature)

Contractor shall attach evidence of authority of Agent for Service process to sign. If Contractor is a corporation, corporate entity or LLC, Contractor shall attach Corporate Resolution authorizing Agent for Service process authority to sign.

(If Contractor is a corporation, corporate entity or LLC, attach evidence of authority to sign.)

Approved as to Form:

By: _____

Attorney For: _____

END OF SECTION 00500

SECTION 00550 - NOTICE TO PROCEED

Note: The following Notice To Proceed Document will be completed after Contract Award.

TO: _____

_____

_____

Contract Name/Title: Noland Wastewater Treatment Switchgear Replacement

Contract No: 26-30, Construction – Noland WWTF Switchgear

Owner: City of Fayetteville, Arkansas

You are notified that the Contract Time(s) under the above Contract will commence to run on _____. By that date, you are to start performing your obligations under the Contract Documents. In accordance with the Agreement between Owner and Contractor, the date(s) of Substantial Completion and final completion ready for final payment are _____ and _____ respectively.

Before you may start any work at the Site, the General Conditions provide that you and Owner must each deliver to the other, (with copies to Engineer and other identified additional insureds) certificates of insurance, which each is required to purchase and maintain in accordance with the Contract Documents.

Also before you may start any work at the Site, you must submit the following:

1. Preliminary construction progress schedule.
2. Preliminary schedule of Submittals.
3. Satisfactory evidence of insurance in accordance with the requirements of the General Conditions.
4. Temporary erosion control requireiments as specified.
5. Maintenance of Traffic as specified.

SECTION 00550 - NOTICE TO PROCEED (continued)

You are required to return an acknowledgement copy of this Notice to Proceed to the Owner.

Dated_____.

OWNER

City of Fayetteville

By:

Signature: _____

Title:

Date: _____

ACCEPTANCE OF NOTICE TO PROCEED

CONTRACTOR

_____

By: _____

Signature: _____

Title _____

Date_____, 20___

Copy to Engineer
(Use Certified Mail,
Return Receipt Requested)

END OF DOCUMENT

SECTION 00610 – PERFORMANCE BOND

KNOW ALL MEN BY THESE PRESENTS: THAT

_____

_____

_____

as Principal, hereinafter called Contractor, and

_____

_____

_____

as Surety, hereinafter called Surety, are held and firmly bound unto

City of Fayetteville, Arkansas
113 West Mountain Street
Fayetteville, Arkansas 72701

as Obligee, hereinafter called Owner, in the amount of **$**_____, for the payment whereof Contractor and Surety bind themselves, their heirs, executors, administrators, successors and assigns, jointly and severally, firmly by these presents.

WHEREAS, Contractor has by written Agreement dated _____, 20___, entered into a contract with Owner for

Noland Wastewater Treatment Plant
Switchgear Replacement
Bid 26-30, Construction – Noland WWTF Switchgear

which contract is by reference made a part hereof, and is hereinafter referred to as the Contract.

NOW, THEREFORE, THE CONDITION OF THIS OBLIGATION is such that, if Contractor shall promptly and faithfully perform said Contract, then this obligation shall be null and void; otherwise it shall remain in full force and effect.

The Surety hereby waives notice of any alteration or extension of time made by the Owner.

Whenever Contractor shall be, and declared by Owner to be in default under the Contract, the Owner having performed Owner's obligations, thereunder, the Surety may promptly remedy the default, or shall promptly:

A. Complete the Contract in accordance with its terms and conditions, or

SECTION 00610 – PERFORMANCE BOND (continued)

B. Obtain a bid or bids for completing the Contract in accordance with its terms and conditions, and upon determination by Surety of the lowest responsible bidder, or, if the Owner elects, upon determination by the Owner and the Surety jointly of the lowest responsible bidder, arrange for a contract between such bidder and Owner, and make available as Work progresses (even though there should be a default or a succession of defaults under the contract or contracts of completion arranged under this paragraph) sufficient funds to pay the cost of completion less the balance of the Contract Price; but not exceeding, including other costs and damages for which the Surety may be liable hereunder, the amount set forth in the first paragraph hereof. The term "balance of the Contract Price," as used in this paragraph, shall mean the total amount payable by Owner to Contractor under the Contract and any amendments thereto, less the amount properly paid by Owner to Contractor.

Any suit under this Bond must be instituted before the expiration of two years from the date on which final payment under the Contract falls due.

No right of action shall accrue on this Bond to or for the use of any person or corporation other than the Owner named herein or the heirs, executors, administrators, or successors of the Owner.

Signed and sealed this _____ day of _____ 20___

CONTRACTOR **(CORPORATE SEAL)**

_____

(Type or legibly print)

By:_____

(Type or legibly print)

_____

(Signature)

SECTION 00610 – PERFORMANCE BOND (continued)

SURETY

_____

(Type or legibly print)

By _____

(Type or legibly print)

_____

(Signature)

COUNTERSIGNED: Resident Agent

State of Arkansas

_____

(Type or legibly print)

By _____

(Type or legibly print)

_____

(Signature)

ATTORNEY-IN-FACT

_____

(Type or legibly print)

_____

(Signature)

(This Bond shall be accompanied with Attorney-in-Fact's authority from Surety)

(CORPORATE SEAL)

Approved as to Form:

_____

(Type or legibly print)

_____

(Signature)

Attorney for _____

(Type or legibly print)

END OF SECTION 00610

SECTION 00610 – PERFORMANCE BOND (continued)

THIS PAGE INTENTIONALLY LEFT BLANK

SECTION 00611 – LABOR AND MATERIAL PAYMENT BOND

This Bond is issued simultaneously with Performance Bond in favor of Owner conditioned on the full and faithful performance of the Contract.

KNOW ALL MEN BY THESE PRESENTS: that

_____

_____

_____

as Principal, hereinafter called Contractor, and

_____

_____

_____

as Surety, hereinafter called Surety, are held and firmly bound unto

City of Fayetteville, Arkansas

113 West Mountain Street

Fayetteville, Arkansas 72701

as Obligee, hereinafter called Owner, for the use and benefit of claimants as hereinbelow defined, in the amount of **$**_____, for the payment whereof Principal and Surety bind themselves, their heirs, executors, administrators, successors and assigns, jointly and severally, firmly by these presents.

WHEREAS, Contractor has by written Agreement dated _____, 20__, entered into a contract with Owner for :

Noland Wastewater Treatment Plant

Switchgear Replacement

Bid 26-30, Construction – Noland WWTF Switchgear

which contract is by reference made a part hereof, and is hereinafter referred to as the Contract.

NOW, THEREFORE, THE CONDITION OF THIS OBLIGATION is such that, if Contractor shall promptly make payment to all claimants as hereinafter defined, for all labor and material used or reasonably required for use in the performance of the Contract, then this obligation shall be void; otherwise it shall remain in full force and effect, subject, however, to the following conditions:

A. A claimant is defined as one having a direct contract with the Contractor or with a Subcontractor of the Contractor for labor, material, or both, used or reasonably required for use in the performance of the Contract, labor and material being construed to include that part of water, gas, power, light, heat, oil, gasoline, telephone service, or rental of equipment directly applicable to the Contract.

B. The above named Contractor and Surety hereby jointly and severally agree with the Owner that every claimant as herein defined, who has not been paid in full before the expiration of a period of 90 days after the date on which the last of such claimant's work or labor was done or performed, or materials were furnished by such claimant, may sue on this Bond for the use

SECTION 00611 – LABOR AND MATERIAL PAYMENT BOND (continued)

of such claimant, prosecute the suit to final judgment for such sum or sums as may be justly due claimant, and have execution thereon. The Owner shall not be liable for the payment of any costs or expenses of any such suit.

C. No suit or action shall be commenced hereunder by any claimant:

1. Unless claimant other than one having a direct contract with Principal, shall have given written notice to any two of the following: the Contractor, the Owner, or the Surety within 90 days after such claimant did or performed the last of the work or labor, or furnished the last of the materials for which said claim is made, stating with substantial accuracy the amount claimed and the name of the party to whom the materials were furnished, or for whom the work or labor was done or performed. Such notice shall be served by mailing the same by registered mail or certified mail, postage prepaid, in an envelope addressed to Contractor, Owner or Surety, at any place where an office is regularly maintained for the transaction of business, or served in any manner in which legal process may be served in the state in which the aforesaid Project is located, save that such service need not be made by a public officer.

2. After the expiration of one year following the date on which Contractor ceased Work on the Contract, it being understood, however, that if any limitation embodied in this Bond is prohibited by any Law controlling the construction hereof, such limitation shall be deemed to be amended so as to be equal to the minimum period of limitation permitted by such Law.

3. Other than in a state court of competent jurisdiction in and for the county or other political subdivision of the state in which the Project, or any part thereof, is situated, or in the United States District Court for the district in which the Project, or any part thereof, is situated, and not elsewhere.

D. The amount of this Bond shall be reduced by and to the extent of any payment or payments made in good faith hereunder, inclusive of the payment by Surety of mechanics' liens which may be filed of record against said improvement, whether or not claim for the amount of such lien be presented under and against this Bond.

Signed and sealed this _____ day of _____ 20__

CONTRACTOR **(CORPORATE SEAL)**

_____

(Type or legibly print)

By:_____

(Type or legibly print)

_____

(Signature)

SECTION 00611 – LABOR AND MATERIAL PAYMENT BOND (continued)

SURETY

_____

(Type or legibly print)

By _____

(Type or legibly print)

_____

(Signature)

COUNTERSIGNED: Resident Agent

State of Arkansas

_____

(Type or legibly print)

By _____

(Type or legibly print)

_____

(Signature)

ATTORNEY-IN-FACT

_____

(Type or legibly print)

_____

(Signature)

(This Bond shall be accompanied with Attorney-in-Fact's authority from Surety)

(CORPORATE SEAL)

Approved as to Form:

_____

(Type or legibly print)

_____

(Signature)

Attorney for _____
(Type or legibly print)

END OF SECTION 00611

THIS PAGE INTENTIONALLY LEFT BLANK

SECTION 00640 – WARRANTY BOND

We,_____, as principal ("Principal"), and _____

as surety ("Surety"), are hereby jointly and severally held and firmly bound unto the City of Fayetteville for the payment of_____ _____Dollars ($_____), subject to the terms and conditions provided herein.

WHEREAS, Principal executed and entered into that certain Agreement with City of Fayetteville for

Noland Wastewater Treatment Plant Switchgear Replacement

Bid 26-30, Construction – Noland WWTF Switchgear

dated_____, 20___ (the "Contract"), the provisions of which are incorporated herein by reference, and unless otherwise defined herein all defined terms used or referred to herein shall have the meaning ascribed thereto in the Contract. In addition to other obligations and liabilities, the Contract required Principal to perform the Work for the Project and to furnish this Bond to City of Fayetteville in compliance with the General Conditions.

NOW THEREFORE, the obligations of Principal and Surety herein shall remain in full force and effect as provided herein, subject to becoming null and void upon the occurrence of either or both of the conditions that (a) Principal shall fully perform and satisfy all obligations and liabilities of Principal under the warranty and guarantee provisions of Article 29 of the General Conditions, as modified or supplemented by the Supplementary Conditions or any other applicable Contract Documents, at any time within two years after the date of Final Acceptance or such longer period of time as may be prescribed therein (the "Warranty Period"), all of which includes without limitation either correcting the defective Work, or removing and replacing it with nondefective Work, or paying all direct, indirect or consequential costs of such correction or removal and replacement, all as provided therein, or (b) City of Fayetteville shall fail to institute a lawsuit, action or other proceeding under this Bond before the expiration of three (3) months following the end of the Warranty Period.

FURTHER PROVIDED, that (a) any changes, modifications, amendments, alterations or supplementations in or to the Contract, and Contract Documents or the Work, or the giving by City of Fayetteville of any extension of time for the performance of the Contract, or any other forbearance on the part of either City of Fayetteville or Principal to the other, shall not in any way release the Principal or Surety, or either of them, from their liability hereunder, notice to the Surety of any of the foregoing being hereby waived, (b) in no event shall the aggregate liability of Surety exceed the amount set out herein, and (c) the rights and obligations hereof shall be binding upon and shall inure to the benefit of Principal, Surety, City of Fayetteville and their respective heirs, legal representatives, partners, privies, successors and assigns, provided that nothing herein shall authorize the assignment of any such rights and obligations.

Date of project final completion is _____.

The bond shall be 25% of the final project value and shall be effective for a period of two years.

SECTION 00640 – WARRANTY BOND (continued)

Executed on the _____day of _____20 ____.

By _____

(Type or legibly print)

_____

(Signature) **SEAL**

_____

Witness:

(Type or legibly print)

_____

(Signature)

Attest: **SEAL**

_____

(Type or legibly print)

_____

(Signature)

Surety

END OF SECTION 00640

SECTION 00700 – GENERAL CONDITIONS

TABLE OF CONTENTS

ARTICLE 1 - DEFINITIONS AND TERMINOLOGY 1

1.01 CONTRACT DOCUMENTS: 1

1.02 DEFINITIONS: 1

1.03 TERMINOLOGY: 5

ARTICLE 2 - PRELIMINARY MATTERS 5

2.01 DELIVERY OF BONDS: 5

2.02 COPIES OF DOCUMENTS: 5

2.03 COMMENCEMENT OF CONTRACT TIMES; NOTICE TO PROCEED: 5

2.04 STARTING THE PROJECT: 6

2.05 BEFORE STARTING CONSTRUCTION: 6

2.06 PRECONSTRUCTION CONFERENCE: 6

2.07 FINALIZING SCHEDULES: 6

ARTICLE 3 - CONTRACT DOCUMENTS: INTENT, AMENDING, REUSE 6

3.01 INTENT: 6

3.02 AMENDING AND SUPPLEMENTING CONTRACT DOCUMENTS: 8

3.03 OWNERSHIP AND REUSE OF DOCUMENTS: 8

ARTICLE 4 - AVAILABILITY OF LANDS; PHYSICAL CONDITIONS; REFERENCE POINTS 8

4.01 AVAILABILITY OF LANDS: 8

4.02 UNFORESEEN SUBSURFACE CONDITIONS: 8

4.03 PHYSICAL CONDITIONS - UNDERGROUND FACILITIES: 9

4.04 REFERENCE POINTS: 10

4.05 ASBESTOS, PCBS, PETROLEUM, HAZARDOUS WASTE, OR RADIOACTIVE MATERIAL: 10

ARTICLE 5 - BONDS AND INSURANCE 11

5.01 PERFORMANCE AND OTHER BONDS: 11

5.02 INSURANCE: 12

SECTION 00700 – GENERAL CONDITIONS (continued)

ARTICLE 6 - CONTRACTOR'S RESPONSIBILITIES.....17
6.01 SUPERVISION AND SUPERINTENDENCE: 17
6.02 LABOR, EQUIPMENT, AND MATERIALS: 18
6.03 ADJUSTING PROGRESS SCHEDULE: 18
6.04 SUBSTITUTES OR "OR-EQUAL" ITEMS: 18
6.05 CONCERNING SUBCONTRACTORS, SUPPLIERS, AND OTHERS: 20
6.06 PATENT FEES AND ROYALTIES: 21
6.07 PERMITS: 22
6.08 LAWS AND REGULATIONS: 22
6.09 TAXES: 22
6.10 USE OF PREMISES: 22
6.11 RECORD DOCUMENTS: 23
6.12 SAFETY AND PROTECTION: 23
6.13 EMERGENCIES: 24
6.14 SUBMITTALS: 24
6.15 CONTINUING THE WORK: 25
6.16 INDEMNIFICATION: 25

ARTICLE 7 - OTHER WORK.....26
7.01 RELATED WORK AT SITE: 26
7.02 COORDINATION: 27

ARTICLE 8 - OWNER'S RESPONSIBILITIES.....27
8.01 COMMUNICATIONS: 27
8.02 CHANGE OF ENGINEER : 27
8.03 REQUIRED DATA: 27
8.04 LANDS AND EASEMENTS: 27
8.05 INSURANCE: 27
8.06 CHANGE ORDERS: 27
8.07 INSPECTIONS AND TESTS: 28
8.08 STOPPING THE WORK: 28
8.09 LIMITATIONS ON OWNER'S RESPONSIBILITIES: 28

SECTION 00700 – GENERAL CONDITIONS (continued)

ARTICLE 9 - ENGINEER'S STATUS DURING CONSTRUCTION 28
9.01 OWNER'S REPRESENTATIVE: 28
9.02 VISITS TO SITE: 28
9.03 PROJECT REPRESENTATION: 28
9.04 CLARIFICATIONS AND INTERPRETATIONS: 29
9.05 AUTHORIZED VARIATIONS IN WORK: 29
9.06 REJECTING DEFECTIVE WORK: 29
9.07 SUBMITTALS, CHANGE ORDERS, AND PAYMENTS: 29
9.08 DETERMINATIONS FOR UNIT PRICES: 29
9.09 DECISIONS ON DISPUTES: 30
9.10 LIMITATIONS ON ENGINEER'S RESPONSIBILITIES: 30

ARTICLE 10 - CHANGES IN THE WORK 31
10.01 GENERAL: 31

ARTICLE 11 - CHANGE OF CONTRACT PRICE 32
11.01 GENERAL: 32
11.02 COST OF THE WORK: 33
11.03 CONTRACTOR'S FEE: 35
11.04 CASH ALLOWANCES: 36
11.05 UNIT PRICE WORK: 36
11.06 RIGHT OF AUDIT: 36

ARTICLE 12 - CHANGE OF CONTRACT TIMES 37
12.01 GENERAL: 37

ARTICLE 13 - WARRANTY AND GUARANTEE; TESTS AND INSPECTIONS; CORRECTION, REMOVAL, OR ACCEPTANCE OF DEFECTIVE WORK 38
13.01 WARRANTY AND GUARANTEE: 38
13.02 ACCESS TO THE WORK: 38
13.03 TESTS AND INSPECTIONS: 38
13.04 DEFECTIVE WORK: 39
13.05 UNCOVERING WORK: 39
13.06 OWNER MAY STOP THE WORK: 40

SECTION 00700 – GENERAL CONDITIONS (continued)

13.07 CORRECTION OR REMOVAL OF DEFECTIVE WORK: 40
13.08 TWO-YEAR WARRANTY AND CORRECTION PERIOD: 40
13.09 ACCEPTANCE OF DEFECTIVE WORK: 41
13.10 OWNER MAY CORRECT DEFECTIVE WORK: 41

ARTICLE 14 - PAYMENTS TO CONTRACTOR AND COMPLETION 42
14.01 SCHEDULE OF VALUES: 42
14.02 APPLICATION FOR PROGRESS PAYMENT: 42
14.03 CONTRACTOR'S WARRANTY OF TITLE: 42
14.04 REVIEW OF APPLICATION FOR PROGRESS PAYMENT: 42
14.05 SUBSTANTIAL COMPLETION: 44
14.06 PARTIAL UTILIZATION: 45
14.07 FINAL INSPECTION: 46
14.08 FINAL APPLICATION FOR PAYMENT: 46
14.09 FINAL PAYMENT AND ACCEPTANCE: 46
14.10 CONTRACTOR'S CONTINUING OBLIGATION: 47
14.11 WAIVER OF CLAIMS: THE MAKING AND ACCEPTANCE OF FINAL PAYMENT WILL CONSTITUTE: 47
14.12 INTEREST: NOT APPLICABLE. 47

ARTICLE 15 - SUSPENSION OF WORK AND TERMINATION 47
15.01 OWNER MAY SUSPEND WORK: 47
15.02 OWNER MAY TERMINATE: 48
15.03 CONTRACTOR MAY STOP WORK OR TERMINATE: 49

ARTICLE 16 - RESOLUTION OF DISPUTES 49
16.01 RESOLUTION OF CLAIMS AND DISPUTES 49

ARTICLE 17 - MISCELLANEOUS 50
17.01 GIVING NOTICE: 50
17.02 COMPUTATION OF TIME: 50
17.03 CLAIMS, CUMULATIVE REMEDIES: 50
17.04 FREEDOM OF INFORMATION ACT 52

SECTION 00700 – GENERAL CONDITIONS (continued)

This document is based upon Engineers Joint Contract Documents Committee "Standard General Conditions of the Construction Contract," with modifications.

ARTICLE 1 - DEFINITIONS AND TERMINOLOGY

1.01 CONTRACT DOCUMENTS:

1. The Contract Documents establish the rights and obligations of the parties and shall consist of the documents listed in DOCUMENT 00500, AGREEMENT.

B. Reports and drawings of subsurface and physical conditions and approved Submittals by Contractor are not Contract Documents.

C. Only printed or hard copies of items listed in subparagraph 1.01A are Contract Documents. Files in electronic media format of text, data, graphics, and the like that may be furnished by Owner to Contractor are not Contract Documents.

1.02 DEFINITIONS:

A. Wherever used in these General Conditions or elsewhere in the Contract Documents, the following terms have the meanings indicated below, which are applicable to both the singular and plural thereof:

1. "Addenda" - written or graphic changes or interpretations of the Contract Documents issued by Owner prior to the opening of Bids.
2. "Agreement" - the written agreement between Owner and Contractor covering the Work to be performed; other Contract Documents are attached to the Agreement and made a part thereof as provided therein.
3. "Application for Payment" - the form acceptable to Engineer which is to be used by Contractor during the course of the Work in requesting progress and final payments and which is to be accompanied by such supporting documentation as is required by the Contract Documents.
4. "Asbestos" - any material that contains more than 1% asbestos and is friable or is releasing asbestos fibers into the air above current action levels established by the United States Occupational Safety and Health Administration.
5. "Bid" - the formal offer of the Bidder submitted on the prescribed Bid Form together with the required Bid security and all information submitted with the Bid that pertains to performance of the Work.
6. "Bidder" - any person, firm, or corporation submitting a Bid for the Work or their duly authorized representatives.
7. "Change Order" - a written document signed by Owner and Engineer authorizing an addition, deletion, or revision in the Work, or an adjustment in the Contract Price or the Contract Time issued on or after execution of the Agreement.
8. "Contract Drawings" - drawings and other data designated as Contract Drawings prepared by Engineer for this Contract which show the character and scope of the Work to be performed and are referred to in the Contract Documents.
9. "Contract Price" - the total monies payable to Contractor under the Contract Documents as stated in the Agreement.

SECTION 00700 – GENERAL CONDITIONS (continued)

10. "Contract Times" - the number of days or the dates stated in the Agreement to: (i) achieve Substantial Completion; and (ii) complete the Work so that it is ready for final payment as evidenced by Engineer's written recommendations of final payment.
11. "Contractor" - the person, firm or corporation with whom Owner has entered into the Agreement.
12. "Date of Contract", "Effective Date of the Agreement" - the date of the City Council Approval also indicated in the Agreement.
13. "Engineer" or "Engineer-Architect" - Architect, engineer, or other licensed professional who is either employed or has contracted with Owner to serve in a design capacity and whose consultants, members, partners, employees, or agents have prepared and sealed the Drawings and Specifications.
14. "Engineer's Consultant" - an individual or entity having a contract with Engineer to furnish services as Engineer's independent professional associate or consultant with respect to the Project.
15. "Equipment" - a product with operational or nonoperational parts, whether motorized or manually operated, that requires service connections, such as wiring or piping.
16. "Field Order" - a written order issued by Engineer which orders minor changes in the Work in accordance with Paragraph 9.05 but which does not involve a change in the Contract Price or the Contract Times.
17. "General Requirements" - Sections of DIVISION 1 of the Specifications. The General Requirements pertain to all sections of the Specifications.
18. "Hazardous Waste" - the term Hazardous Waste shall have the meaning provided in Section 1004 of the Solid Waste Disposal Act (42 USC Section 6903) as amended from time to time.
19. "Law" - law of the place of the Project which shall govern the performance hereunder.
20. "Laws and Regulations," "Laws or Regulations" - laws, rules, regulations, ordinances, codes and/or orders of any and all governmental bodies, agencies, authorities, and courts having jurisdiction.
21. "Lien" - charges, security interests, or encumbrances on Project funds, real property, or personal property.
22. "Materials" - products substantially shaped, cut, worked, mixed, finished, refined, or otherwise fabricated, processed, or installed to form a part of the Work.
23. "Notice of Award" - the written notice by Owner to the apparent successful Bidder stating that upon compliance by the apparent successful Bidder with the conditions precedent enumerated therein, within the time specified, Owner will sign and deliver the Agreement.
24. "Notice to Proceed" - the written notice by Owner to Contractor fixing the date on which the Contract Times will commence to run and on which Contractor shall start to perform Contractor's obligation under the Contract Documents.
25. "Owner" - the City of Fayetteville, Arkansas, a constitutionally chartered municipal corporation, with which the Contractor has entered into the Agreement and for whom the Work is to be provided.

SECTION 00700 – GENERAL CONDITIONS (continued)

26. "Partial Utilization" - placing a portion of the Work in service for the purpose for which it is intended (or a related purpose) before reaching Substantial Completion of all the Work.
27. "PCBs" - Polychlorinated biphenyls.
28. "Petroleum" - petroleum, including crude oil or any fraction thereof which is liquid at standard conditions of temperature and pressure (60º Fahrenheit and 14.7 pounds per square inch absolute), such as oil, petroleum, fuel oil, oil sludge, oil refuse, gasoline, kerosene, and oil mixed with other non-Hazardous Wastes and crude oils.
29. "Program Manager" – NOT USED.
30. "Project" - the total construction of which the Work to be provided under the Contract Documents may be the whole, or a part as indicated elsewhere in the Contract Documents.
31. "Project Manual" - The bound documentary information prepared for bidding and constructing the Work. A listing of the contents of the Project Manual, which may be bound in one or more volumes, is contained in the table(s) of contents.
32. "Radioactive Material" - source, special nuclear, or byproduct material as defined by the Atomic Energy Act of 1954 (42 USC Section 2011 et seq.) as amended from time to time.
33. "Resident Project Representative" - the authorized representative of Engineer who is assigned to the construction Site or any part thereof.
34. "Reference Drawings" - drawings not specifically prepared for, nor a part of, this Contract, but which contain information pertinent to the Work.
35. "Samples" - physical examples of Equipment, Materials, or workmanship that are representative of some portion of the Work and which establish the standards by which such portion of the Work will be judged.
36. "Shop Drawings" - all drawings, diagrams, illustrations, schedules, and other data or information which are specifically prepared or assembled by or for Contractor and submitted by Contractor to illustrate some portion of the Work.
37. "Site" - lands or areas indicated in the Contract Documents as being furnished by Owner upon which the Work is to be performed, including rights-of-way and easements for access thereto, and such other lands furnished by Owner which are designated for the use of Contractor.
38. "Specifications" - those portions of the Contract Documents consisting of written technical descriptions of the Work, and covering the Equipment, Materials, workmanship, and certain administrative details applicable thereto.
39. "Subcontractor" - an individual, firm, or corporation having a direct contract with Contractor or with any other Subcontractor for the performance of a part of the Work at the Site.
40. "Submittals" - all Shop Drawings, product data, and Samples which are prepared by Contractor, a Subcontractor, manufacturer, or Supplier, and submitted by Contractor to Engineer as a basis for approval of the use of Equipment and Materials proposed for incorporation in the Work or needed to describe proper installation, operation and maintenance, or technical properties.

SECTION 00700 – GENERAL CONDITIONS (continued)

41. "Substantial Completion" - the Work (or a specified part thereof) has progressed to the point where, in the opinion of Engineer as evidenced by his definitive certificate of Substantial Completion, it is sufficiently complete, in accordance with the Contract Documents, so that the Work (or specified part) can be used for the purposes for which it was intended.
42. "Supplementary Conditions" – part of the Contract Documents which amends and/or supplements these General Conditions.
43. "Supplier" - a manufacturer, fabricator, supplier, distributor, material man, or vendor.
44. "Underground Facilities" - all pipelines, conduits, ducts, cables, wires, manholes, vaults, tanks, tunnels, or other such facilities or attachments, and any encasements containing such facilities which have been installed underground to furnish any of the following services or materials: electricity, gases, steam, liquid petroleum products, telephone or other communications, cable television, sewage and drainage removal, traffic or other control systems, or water.
45. "Unit Price Work" - Work to be paid on the basis of Unit Prices.
46. "Work" - the entire completed construction or the various separately identifiable parts thereof required to be furnished under the Contract Documents. Work is the result of performing services, the furnishing of Bonds and insurance, furnishing labor, and furnishing and incorporating Materials and Equipment into the construction, all as required by the Contract Documents.
47. "Work Change Directive" - a written directive to Contractor, issued on or after the effective Date of the Agreement and signed by Owner and recommended by Engineer, ordering an addition, deletion, or revision in the Work, or responding to differing or unforeseen physical conditions under which the Work is to be performed as provided in Article 4 or to emergencies under Paragraph 6.13. A Work Change Directive will not change the Contract Price or the Contract Times, but is evidence that the parties expect that the change directed or documented by a Work Change Directive will be incorporated in a subsequently issued Change Order following negotiations by the parties as to its effect, if any, on the Contract Price or Contract Times as provided in Paragraph 10.01B.
48. "Written Amendment" - a written amendment to the Contract Documents, signed by Owner and Contractor on or after the Effective Date of the Agreement, and normally dealing with the nonengineering or nontechnical rather than strictly Work-related aspects of the Contract Documents.
49. "Year 2000 Compliance" or "Year 2000 Compliant" – means that equipment, devices, items, systems, software, hardware, and firmware included in the Work or used to produce the Work shall properly, appropriately, and consistently function and accurately process date and time data (including without limitation: calculating, comparing, and sequencing) on and after December 31, 1999, including leap year calculations.

SECTION 00700 – GENERAL CONDITIONS (continued)

1.03 TERMINOLOGY:

A. Whenever used in these General Conditions or elsewhere in the Contract Documents, the following terminology shall have the intent and meaning specified below:
   1. The words "as indicated" refer to the Drawings and "as specified" refer to the remaining Contract Documents.
   2. The terms "responsible" or "responsibility" mean that the party to which the term applies shall assume all responsibilities thereto.
   3. The term "approve", when used in response to Submittals, requests, applications, inquiries, reports and claims by Contractor, will be held to limitations of Engineer's responsibilities and duties or specified in these General Conditions. In no case will "approval" by Engineer be interpreted as a release of Contractor from responsibilities to fulfill requirements of Contract Documents.
   4. When applied to Equipment and Materials, the words "furnish", "install", and "provide" shall mean the following:
      a. The word "provide" shall mean to furnish, pay for, deliver, assemble, install, adjust, clean and otherwise make Materials and Equipment fit for their intended use.
      b. The word "furnish" shall mean to secure, pay for, deliver to Site, unload and uncrate Equipment and Materials.
      c. The word "install" shall mean to assemble, place in position, incorporate in the Work, adjust, clean, and make fit for use.
      d. The phrase "furnish and install" shall be equivalent to the word "provide."
   5. The word "day" shall constitute a calendar day of twenty-four hours measured from midnight to the next midnight.

ARTICLE 2 - PRELIMINARY MATTERS

2.01 DELIVERY OF BONDS:

A. When Contractor delivers the executed Agreements to Owner, Contractor shall also deliver to Owner such executed and recorded Bonds as Contractor may be required to furnish in accordance with Paragraph 5.01.

2.02 COPIES OF DOCUMENTS:

A. Owner will furnish to Contractor copies of the Contract Documents as stated in the General Requirements.

2.03 COMMENCEMENT OF CONTRACT TIMES; NOTICE TO PROCEED:

A. The Contract Times will commence to run on the day indicated in the Notice to Proceed. A Notice to Proceed may be given at any time mutually agreed upon by the Contractor and the Owner within 60 days after the Effective Date of the Agreement upon completion of required executed documents. Unless modified by formal written agreement, the Contract Times will commence to run no later than the 90th day after the Effective Date of the Agreement.

SECTION 00700 – GENERAL CONDITIONS (continued)

2.04 STARTING THE PROJECT:

A. Contractor shall start to perform the Work on the date when the Contract Times commence to run, but no Work shall be done at the Site prior to the date on which the Contract Times commence to run.

2.05 BEFORE STARTING CONSTRUCTION:

A. Before starting construction and undertaking each part of the Work, Contractor shall carefully study and compare the Contract Documents and check and verify pertinent figures shown thereon and all applicable field measurements. Contractor shall promptly report in writing to Engineer any conflict, error or discrepancy which Contractor may discover and shall obtain a written interpretation or clarification from Engineer before proceeding with any Work affected thereby; however, Contractor shall not be liable to Owner or Engineer for failure to report any conflict, error, or discrepancy in the Contract Documents, unless Contractor had actual knowledge thereof or should reasonably have known thereof.

B. Within thirty (60) days after the Effective Date of the Agreement, and before Contractor starts the Work at the Site, Contractor shall submit items as noted in Document 00550 – Notice to Proceed (and as specified) to Engineer for review.

C. Further, before any Work at the Site is started, Contractor shall deliver to Owner, with a copy to Engineer, certificates and other evidence of insurance requested by Owner which Contractor is required to purchase and maintain in accordance with Paragraph 5.02 (and Owner shall deliver to Contractor certificates and other evidence of insurance requested by Contractor which Owner is required to purchase and maintain in accordance with Paragraph 5.02).

2.06 PRECONSTRUCTION CONFERENCE:

A. Within 60 days after the Effective Date of the Agreement, but before Contractor starts the Work at the Site, a conference attended by Contractor, Engineer, and others as appropriate will be held to discuss the schedules referred to in Paragraph 2.05B, to discuss procedures for handling Submittals, processing Applications for Payment, and to establish a working understanding among the parties as to the Work.

2.07 FINALIZING SCHEDULES:

A. A schedule shall be finalized in accordance with Specification SECTION 01321. The finalized construction progress schedule will be acceptable to Engineer if it provides an orderly progression of the Work to completion within the Contract Times, but such acceptance will neither impose on Engineer responsibility for the progress or scheduling of the Work nor relieve Contractor from full responsibility therefor. The finalized schedule of Submittal submissions will be acceptable to Engineer if it provides a workable arrangement for processing the submissions.

ARTICLE 3 - CONTRACT DOCUMENTS: INTENT, AMENDING, REUSE

3.01 INTENT:

A. The Contract Documents comprise the entire agreement between Owner and Contractor concerning the Work. The Contract Documents are complementary; what

SECTION 00700 – GENERAL CONDITIONS (continued)

is called for by one is as binding as if called for by all. The Contract Documents will be construed in accordance with the Law of the place of the Project.

B. It is the intent of the Contract Documents to describe a functionally complete Project (or part thereof) to be constructed in accordance with the Contract Documents. Any Work, Materials, or Equipment that may reasonably be inferred from the Contract Documents as being required to produce the intended result will be supplied whether or not specifically called for, at no additional cost to the Owner.

1. When words which have a well-known technical or trade meaning are used to describe Work, Materials, or Equipment, such words shall be interpreted in accordance with that meaning.
2. Reference to standard specifications, manuals, or codes of any technical society, organization, or association, or to the Laws or Regulations of any governmental authority, whether such reference be specific or by implication, shall mean the latest standard specification, manual, code, or Laws or Regulations in effect at the time of opening of Bids except as may be otherwise specifically stated. However, no provision of any referenced standard specification, manual, or code (whether or not specifically incorporated by reference in the Contract Documents) shall be effective to change the duties and responsibilities of Owner, Contractor, or Engineer, or any of their consultants, agents, or employees from those set forth in the Contract Documents, nor shall it be effective to assign to Engineer, or any of Engineer's consultants, agents or employees, any duty or authority to supervise or direct the furnishing or performance of the Work or any duty or authority to undertake responsibility contrary to the provisions of the Contract Documents.
3. Clarifications and interpretations of the Contract Documents shall be issued by Engineer as provided in Paragraph 9.04.

C. If, during the performance of the Work, Contractor finds a conflict, error, or discrepancy in the Contract Documents, Contractor shall so report to Engineer in writing at once and before proceeding with the Work affected thereby shall obtain a written interpretation or clarification from Engineer, however, Contractor shall not be liable to Owner or Engineer for failure to report any conflict, error, or discrepancy in the Contract Documents unless Contractor had actual knowledge thereof or should reasonably have known thereof.

D. Applicable codes and standards referenced in these Contract Documents establish minimum requirements for Equipment, Materials, and Work and are superseded by more stringent requirements of Contract Documents when and where they occur.

E. The Specifications are separated into Divisions and Sections for convenience in defining the Work. Contract Drawings are separated according to engineering disciplines and other classifications. This sectionalizing and the arrangement of Contract Drawings shall not control the Contractor in dividing the Work among Subcontractors or Suppliers or delineating the Work to be performed by any specific trade.

SECTION 00700 – GENERAL CONDITIONS (continued)

3.02 AMENDING AND SUPPLEMENTING CONTRACT DOCUMENTS:

A. The Contract Documents may be amended to provide for additions, deletions, and revisions in the Work or to modify the terms and conditions thereof in one or more of the following ways:
   1. A formal Written Amendment.
   2. A Change Order (pursuant to Paragraph 10.01D).

B. As indicated in Paragraphs 11.01B and 12.01A, Contract Price and Contract Times may only be changed by a Change Order or Written Amendment.

C. In addition, the requirements of the Contract Documents may be supplemented, and minor variations and deviations in the Work may be authorized, in the following way:
   1. A Field Order (pursuant to Paragraph 9.05).
   2. Engineer's written interpretation or clarification (pursuant to Paragraph 9.04).

3.03 OWNERSHIP AND REUSE OF DOCUMENTS:

A. All Contract Documents and copies thereof furnished by Engineer shall be the property of the Owner.

B. Neither Contractor nor any Subcontractor or Supplier or other person or organization performing or furnishing any of the Work under a direct or indirect contract with Owner shall have or acquire any title to or ownership rights in any of the Drawings, Specifications, or other documents (or copies of any thereof) prepared by or bearing the seal of Engineer; and they shall not reuse any of the documents on extensions of the Project or any other project without written consent of Owner and Engineer and specific written verification or adaptation by Engineer.

ARTICLE 4 - AVAILABILITY OF LANDS; PHYSICAL CONDITIONS; REFERENCE POINTS

4.01 AVAILABILITY OF LANDS:

A. Owner shall furnish, as indicated in the Contract Documents, the lands upon which the Work is to be performed, rights-of-way and easements for access thereto, and such other lands which are designated for the use of Contractor. Easements for permanent structures or permanent changes in existing facilities will be obtained and paid for by Owner, unless otherwise provided in the Contract Documents.

B. If Contractor believes that any delay in Owner's furnishing these lands, rights-of-way, or easements entitles Contractor to an extension of the Contract Times, Contractor may make a claim therefor as provided in Article 12.

C. Contractor shall provide for all additional lands and access thereto that may be required for temporary construction facilities or storage of materials and equipment.

D. Contractor shall confine his operations to the construction limits indicated.

4.02 UNFORESEEN SUBSURFACE CONDITIONS:

A. Contractor shall promptly notify Engineer in writing of any subsurface or latent physical conditions encountered at the Site which differ materially from those

SECTION 00700 – GENERAL CONDITIONS (continued)

specified or indicated, or which could be reasonably interpreted from examination of the Site and available subsurface information at the time of bidding.

B. Engineer will promptly investigate those conditions and advise Owner if further surveys or subsurface tests are necessary. Promptly thereafter, Engineer will obtain the necessary additional surveys and tests and furnish copies of results to Contractor and Owner.

C. If Engineer and Owner find that the subsurface or latent physical conditions encountered at the Site differ materially from those specified or indicated, or which could have been reasonably interpreted from examination of the Site and available subsurface information at the time of bidding, then a Change Order will be issued by the Owner incorporating the necessary revisions.

4.03 PHYSICAL CONDITIONS - UNDERGROUND FACILITIES:

A. Shown or Indicated: The information and data shown or indicated in the Contract Documents with respect to existing Underground Facilities at or contiguous to the Site is based on information and data furnished to Owner or Engineer by the owners of such Underground Facilities or by others. Unless it is otherwise expressly provided:

1. Owner and Engineer shall not be responsible for the accuracy or completeness of any such information or data; and,
2. Contractor shall have full responsibility for reviewing and checking all such information and data, for locating all Underground Facilities shown or indicated in the Contract Documents, for coordination of the Work with the owners of such Underground Facilities during construction, for the safety and protection thereof as provided in Paragraph 6.12 and repairing any damage thereto resulting from the Work, the cost of all of which will be considered as having been included in the Contract Price.

B. Not Shown or Indicated: If an Underground Facility is uncovered or revealed at or contiguous to the Site which was not shown or indicated in the Contract Documents and which Contractor could not reasonably have been expected to be aware of, Contractor shall, promptly after becoming aware thereof and before performing any Work affected thereby (except in an emergency as permitted by Paragraph 6.13), identify the owner of such Underground Facility and give written notice thereof to that owner and Engineer. Engineer will promptly review the Underground Facility to determine the extent to which the Contract Documents should be modified to reflect and document the consequences of the existence of the Underground Facility, and the Contract Documents will be amended or supplemented to the extent necessary. During such time, Contractor shall be responsible for the safety and protection of such Underground Facility as provided in Paragraph 6.12. Contractor shall be allowed an increase in the Contract Price or an extension of the Contract Times, or both, to the extent that they are attributable to the existence of any Underground Facility that was not shown or indicated in the Contract Documents and which Contractor could not reasonably have been expected to be aware of. If the parties are unable to agree as to the amount or length thereof, Contractor may make a claim therefor as provided in Articles 11 and 12.

SECTION 00700 – GENERAL CONDITIONS (continued)

4.04 REFERENCE POINTS:

A. Engineer will provide engineering surveys to establish reference points for construction which in Engineer's judgment are necessary to enable Contractor to proceed with the Work. Contractor shall be responsible for laying out the Work (unless otherwise specified in the General Requirements), shall protect and preserve the established reference points, and shall make no changes or relocations without the prior written approval of Engineer. Contractor shall report to Engineer whenever any reference point is lost or destroyed or requires relocation because of necessary changes in grades or locations, and shall be responsible for the accurate replacement or relocation of such reference points by professionally qualified personnel. Contractor shall be responsible for any mistakes or loss of time that may result from their loss or disturbance.

B. Contractor shall make such surveys as are required for establishing pay limits and determining quantities for progress pay estimates. He shall furnish Engineer with one copy each of all field notes of such surveys.

4.05 ASBESTOS, PCBS, PETROLEUM, HAZARDOUS WASTE, OR RADIOACTIVE MATERIAL:

A. Owner shall be responsible for any Asbestos, PCBs, Petroleum, Hazardous Waste, or Radioactive Material uncovered or revealed at the Site which was not shown or indicated in Drawings or Specifications or identified in the Contract Documents to be within the scope of the Work and which may present a substantial danger to persons or property exposed thereto in connection with the Work at the Site. Owner shall not be responsible for any such materials brought to the Site by Contractor, Subcontractor, Suppliers, or anyone else for whom Contractor is responsible.

B. Contractor shall immediately: (i) stop all Work in connection with such hazardous condition and in any area affected thereby (except in an emergency as required by Paragraph 6.13), and (ii) notify Owner and Engineer (and thereafter confirm such notice in writing). Owner shall promptly consult with Engineer concerning the necessity for Owner to retain a qualified expert to evaluate such hazardous condition or take corrective action, if any. Contractor shall not be required to resume Work in connection with such hazardous condition or in any such affected area until after Owner has obtained any required permits related thereto and delivered to Contractor special written notice: (i) specifying that such condition and any affected area is or has been rendered safe for the resumption of Work, or (ii) specifying any special conditions under which such Work may be resumed safely. If Owner and Contractor cannot agree as to entitlement to or the amount or extent of an adjustment, if any, in Contract Price or Contract Times as a result of such Work stoppage or such special conditions under which Work is agreed by Contractor to be resumed, either party may make a claim therefor as provided in Articles 11 and 12.

C. If after receipt of such special written notice Contractor does not agree to resume such Work based on a reasonable belief it is unsafe, or does not agree to resume such Work under such special conditions, then Owner may order such portion of the Work that is in connection with such hazardous condition or in such affected area to be deleted from the Work. If Owner and Contractor cannot agree as to entitlement to or the amount or extent of an adjustment, if any, in Contract Price or Contract Times as a result of deleting such portion of the Work, then either party may make a claim

SECTION 00700 – GENERAL CONDITIONS (continued)

therefor as provided in Articles 11 and 12. Owner may have such deleted portion of the Work performed by Owner's own forces or others in accordance with Article 7.

D. To the fullest extent permitted by Laws and Regulations, Contractor shall indemnify and hold harmless Owner, Engineer, Engineer's Consultants, and the officers, directors, partners, employees, agents, other consultants, and subcontractors of each and any of them from and against all claims, costs, losses, and damages arising out of or relating to such hazardous condition created by Contractor or by anyone for whom Contractor is responsible. Nothing in this subparagraph 4.05E shall obligate Contractor to indemnify any person or entity from and against the consequences of that person's or entity's own negligence.

E. The provisions of Paragraphs 4.02 and 4.03 are not intended to apply to Asbestos, PCBs, Petroleum, Hazardous Waste, or Radioactive Material uncovered or revealed at the Site.

ARTICLE 5 - BONDS AND INSURANCE

5.01 PERFORMANCE AND OTHER BONDS:

A. Contractor shall furnish performance and payment Bonds, each in an amount at least equal to the Contract Price as security for the faithful performance and payment of all Contractor's obligations under the Contract Documents. These Bonds shall remain in effect at least until two years after the date when final payment is approved by Owner, except as otherwise provided by Law or Regulation or by the Contract Documents. Contractor shall also furnish such other Bonds as are required by the Contract Documents. All Bonds shall be in the forms prescribed by Law or Regulation or by the Contract Documents and be executed by such sureties as are named in the current list of "Companies Holding Certificates of Authority as Acceptable Sureties on Federal Bonds and as Acceptable Reinsuring Companies" as published in Circular 570 (amended) by the Financial Management Service, Surety Bond Branch, U.S. Department of the Treasury. All bonds shall be signed by an Arkansas Agent.

B. The Bonds shall be automatically increased in amount and extended in time without formal and separate amendments to cover full and faithful performance of the Contract in the event of Change Orders, regardless of the amount of time or money involved. It is Contractor's responsibility to notify his surety of any changes affecting the general scope of the Work or change in the Contract Price or Contract Times.

C. Bonds signed by an agent must be accompanied by a certified copy of the authority to act.

D. Date of Bonds shall be the same as the Effective Date of the Agreement.

E. The Contractor shall file the Performance, Payment and Warranty Bonds at the Washington County Clerk's office prior to providing a file marked copy of the filed Performance, Payment and Warranty Bonds to the Owner or Engineer.

SECTION 00700 – GENERAL CONDITIONS (continued)

F. If at any time during the continuance of the Contract, the surety on any Bond becomes unacceptable to Owner for financial reasons, Owner has the right to require additional and sufficient sureties which Contractor shall furnish to the satisfaction of Owner within ten days after notice to do so.

1. If the surety on any Bond furnished by Contractor is declared bankrupt or becomes insolvent or its right to do business is terminated in any state where any part of the Project is located or it ceases to meet the requirements of Paragraph 5.01A, Contractor shall within five days thereafter substitute another Bond and surety, both of which must be acceptable to Owner.

5.02 INSURANCE:

A. Contractor's Liability Insurance:

1. Contractor and all of his subcontractors shall purchase and maintain such liability and other insurance as is appropriate for the Work being furnished and performed and as will provide protection from claims set forth below which may arise out of or result from Contractor's furnishing and performance of the Work and Contractor's other obligations under the Contract Documents, whether it is to be performed by Contractor, any Subcontractor or Supplier, or by anyone directly or indirectly employed by any of them to perform any of the Work, or by anyone for whose acts any of them may be liable:
   a. Claims under workers' compensation, disability benefits, and other similar employee benefit acts;
   b. Claims for damages because of bodily injury, occupational sickness or disease, or death of Contractor's employees;
   c. Claims for damages because of bodily injury, sickness, or disease, or death of any person other than Contractor's employees;
   d. Claims for damages insured by reasonably available personal injury liability coverage which are sustained: (i) by any person as a result of an offense directly or indirectly related to the employment of such person by Contractor, or (ii) by any other person for any other reason;
   e. Claims for damages, other than to the Work itself, because of injury to or destruction of tangible property wherever located, including loss of use therefrom;
   f. Claims arising out of operation of Laws or Regulations for damages because of bodily injury or death of any person or for damage to property; and
   g. Claims for damages because of bodily injury or death of any person or property damage arising out of the ownership, maintenance, or use of any motor vehicle.

2. The insurance required by this paragraph shall include the specific coverages, and be written for not less than the limits of liability specified or required by Law, whichever is greater.

a.	Umbrella General Liability	$5,000,000
b.	Workers' compensation	Statutory (State and Federal Limits)
	Employer's Liability	$500,000 each accident
c.	Commercial General Liability	
	(1) General Aggregate	$2,000,000

SECTION 00700 – GENERAL CONDITIONS (continued)

(2)	Products-Completed Operations Aggregate	$2,000,000
(3)	Personal & Advertising Injury Limit	$1,000,000
(4)	Each Occurrence Limit	$1,000,000
(5)	Fire Damage Limit	$ 100,000
(6)	Medical Expense Limit	$ 5,000

d. Business Automobile Liability

(1)	Any one loss or accident	$1,000,000

B. The policies of insurance so required by paragraph 5.02A to be purchased and maintained shall:

1. with respect to insurance required by Paragraphs 5.02A.1.c through 5.02A.1.g inclusive, include as additional insureds by endorsement (subject to customary exclusion in respect of professional liability) Owner, Engineer, and Engineer's Consultants, and include coverage for the respective officers, directors, partners, employees, agents, and other consultants and subcontractors of each and any of all such additional insureds, and the insurance afforded to these additional insureds shall provide primary coverage for all claims covered thereby;
2. include at least the specific coverages and be written for not less than the limits of liability specified in Paragraph 5.02A.2 or required by Laws and Regulations, whichever is greater;
3. with respect to insurance required by paragraphs 5.02A1.c through 5.02A1.g inclusive, include premises/operations, products, completed operations, independent contractors, and personal injury insurance,;
4. include in the Commercial General Liability policy, contractual liability insurance covering Contractor's indemnity obligations under Paragraphs 6.06, 6.10, and 6.16, and written for not less than the limits of liability and coverages specified above;
5. contain a provision or endorsement that the coverage afforded will not be cancelled, materially changed, or renewal refused until at least 30 days' prior written notice by certified mail has been given to Owner and Contractor and to each other additional insured to whom a certificate of insurance has been issued;
6. provide Broad Form Property Damage coverage and contain no exclusion (commonly referred to as XC&U exclusion) relative to blasting, earthquake, flood, explosion, collapse of buildings, or damage to underground property;
7. remain in effect at least until final payment and at all times thereafter when Contractor may be correcting, removing, or replacing defective Work in accordance with Paragraph 13.07;
8. with respect to completed operations insurance, and any insurance coverage written on a claims-made basis, remain in effect for at least two years after final payment and Contractor shall furnish Owner and each other specified additional insured to whom a certificate of insurance has been issued, evidence satisfactory to Owner and any such additional insured of continuation of such insurance at final payment and one year thereafter;
9. include Independent Contractors Protective Liability coverage; and
10. with respect to the Commercial General Liability policy, the maximum deductible allowed shall be $5, 000.

SECTION 00700 – GENERAL CONDITIONS (continued)

11. Owner and Contractor waive all rights against each other and their respective officers, directors, partners, employees, agents, and other consultants and subcontractors of each and any of them for all losses and damages caused by, arising out of, or resulting from any of the perils or causes of loss covered by such policies required by Paragraph 5.02A and any other liability insurance applicable to the Work; and, in addition, waive all such rights against Subcontractors, Engineer, Engineer's Consultants, and all other individuals or entities endorsed as insureds or additional insureds (and the officers, directors, partners, employees, agents and other consultants and subcontractors of each and any of them) under such policies for losses and damages so caused. As required by Paragraph 6.05D, each subcontract between Contractor and a Subcontractor shall contain similar waiver provisions by the Subcontractor in favor of Owner, Contractor, Engineer, Engineer's Consultants, and all other parties endorsed as insureds or additional insureds. None of the above waivers shall extend to the rights that any of the insured parties may have to proceeds of insurance held by Owner as trustee or otherwise payable under any policy so issued. with respect to the Commercial General Liability policy, the maximum deductible allowed shall be $5,000.

C. Owner's Protective Liability Insurance:
   1. Contractor shall be responsible for purchasing and maintaining Owner's Protective Liability insurance with Owner, and Engineer as named insureds.
   2. This insurance shall have the same limits of liability as the Commercial General Liability insurance and shall protect Owner and Engineer against any and all claims and liabilities for injury to or death of persons, or damage to property caused in whole or in part by, or alleged to have been caused in whole or in part by, negligent acts or omissions of Contractor or Subcontractors or any agent, servant, worker, or employee of Contractor or Subcontractors arising from the operations under the Contract Documents.
   3. This insurance may be provided by endorsement to Contractor's Commercial General Liability insurance policy.

D. Property Insurance:
   1. Contractor shall purchase and maintain property insurance upon the Work at the Site in the amount of the full insurable value thereof (subject to such deductible amounts as follows) or as required by Laws or Regulations. This insurance shall:
      a. be on the completed value form and include the interests of Owner, Contractor, Subcontractors, Engineer, and Engineer's Consultants, and the officers, directors, partners, employees, agent, and other consultants and subcontractors of each and any of them, each of whom is deemed to have an insurable interest and shall be listed as an additional insured;
      b. be written on a Builder's Risk "all-risk" or open peril or special causes of loss policy form that shall at least include insurance for physical loss or damage to the Work, temporary buildings, false work, and Equipment and Materials, and shall insure against at least the following perils or causes of loss: fire, lightning, extended coverage, theft, vandalism and malicious mischief, earthquake, collapse, debris removal, demolition occasioned by enforcement of Laws and Regulations, water damage,

SECTION 00700 – GENERAL CONDITIONS (continued)

terrorism, and such other perils (as flood, earthquake, explosions, collapse, underground hazard) or causes of loss as may be specifically required in the Contract Documents;

c. include expenses incurred in the repair or replacement of any insured property (including but not limited to fees and charges of engineers, architects, attorneys, and other professionals);
d. cover Equipment and Materials stored at the Site or at another location that was agreed to in writing by Engineer prior to being incorporated in the Work, provided that such Equipment and Materials have been included in an Application for Payment recommended by Engineer;
e. allow for partial utilization of the Work by Owner;
f. include testing and startup;
g. be maintained in effect until final payment (or the Owner assumes beneficial occupancy and agrees to provide insurance coverage for the facilities so occupied) is made unless otherwise agreed to in writing by Owner, Contractor, and Engineer with 30 days' written notice to each other additional insured to whom a certificate of insurance has been issued; and
h. have a deductible amount of $ 10,000.

2. Contractor shall purchase and maintain such boiler and machinery insurance or additional property insurance as required by Laws and Regulations which will include the interests of Owner, Contractor, Subcontractors, Engineer, and Engineer's Consultants in the Work, each of whom is deemed to have an insurable interest and shall be listed as insured or additional insured parties.
3. All policies of insurance required to be purchased and maintained in accordance with Paragraph 5.02D will contain a provision or endorsement that the coverage afforded will not be cancelled or materially changed or renewal refused until at least 30 days' prior notice by certified mail has been given to Owner and Contractor and to each additional insured to whom a certificate of insurance has been issued and will contain waiver provisions in accordance with Paragraph 5.02F below.
4. Copies of the policies shall be furnished for property insurance. Certificates will not be acceptable.

E. Transit Insurance:
1. Transit insurance shall be furnished by Contractor to protect Contractor and Owner from all risks of physical loss or damage to Equipment and Materials, not otherwise covered under other policies, during transit from point of origin to the Site of installation or erection.
2. This insurance shall be written on an "All Risk" basis with additional coverages applicable to the circumstances that may occur in the particular Work included in this Contact.
3. This insurance shall be in an amount not less than 100% of the manufactured or fabricated value of items exposed to risk in transit at any one time.
4. This insurance shall contain a waiver of rights of subrogation the insurer may have or acquire against Engineer.

F. Waiver of Rights:
1. Owner and Contractor intend that all policies purchased in accordance with Paragraph 5.02D will protect Owner, Contractor, Subcontractors, Engineer,

SECTION 00700 – GENERAL CONDITIONS (continued)

Engineer's Consultants, and other individuals or entities endorsed as insureds or additional insureds (and the officers, directors, partners, employees, agents, and other consultants and subcontractors of each and any of them) in such policies and will provide primary coverage for all losses and damages caused by the perils or causes of loss covered thereby. All such policies shall contain provisions to the effect that in the event of payment of any loss or damage, the insurers will have no rights of recovery against any of the insureds or additional insureds thereunder; and if the insurers require separate waiver forms to be signed by Engineer or Engineer's Consultants, Owner will obtain the same, and if such waiver forms are required of any Subcontractor, Contractor shall obtain the same.

2. Owner and Contractor waive all rights against each other and their respective officers, directors, partners, employees, agents, and other consultants and subcontractors of each and any of them for all losses and damages caused by, arising out of, or resulting from any of the perils or causes of loss covered by such policies required by Paragraph 5.02D and any other property insurance applicable to the Work; and, in addition, waive all such rights against Subcontractors, Engineer, Engineer's Consultants, and all other individuals or entities endorsed as insureds or additional insureds (and the officers, directors, partners, employees, agents, and other consultants and subcontractors of each and any of them) under such policies for losses and damages so caused. As required by Paragraph 6.05D, each subcontract between Contractor and a Subcontractor shall contain similar waiver provisions by the Subcontractor in favor of Owner, Contractor, Engineer, Engineer's Consultants, and all other parties endorsed as insureds or additional insureds. None of the above waivers shall extend to the rights that any of the insured parties may have to proceeds of insurance held by Owner as trustee or otherwise payable under any policy so issued.

G. Receipt and Application of Insurance Proceeds:

1. Any insured loss under the policies of insurance required by Paragraph 5.02D will be adjusted with Owner and made payable to Owner as fiduciary for the insureds, as their interests may appear, subject to the requirements of any applicable mortgage clause and of Paragraph 5.02G.2. Owner shall deposit in a separate account any money so received and shall distribute it in accordance with such agreement as the parties in interest may reach. If no other special agreement is reached, the damaged Work shall be repaired or replaced, the moneys so received applied to account thereof, and the Work and the cost thereof covered by an appropriate Change Order or Written Amendment.

2. Owner as fiduciary shall have power to adjust and settle any loss with the insurers unless one of the parties in interest shall object in writing within 15 days after the occurrence of loss to Owner's exercise of this power. If such objection is made, Owner as fiduciary shall make settlement with the insurers in accordance with such agreement as the parties in interest may reach. If no such agreement among the parties in interest is reached, Owner as fiduciary shall adjust and settle the loss with the insurers and, if required in writing by any party in interest, Owner as fiduciary shall give bond for the proper performance of such duties upon the occurrence of an insured loss.

SECTION 00700 – GENERAL CONDITIONS (continued)

H. Acceptance of Insurance:

1. If Owner has any objection to the coverage afforded by or other provisions of the insurance required to be purchased and maintained by Contractor in accordance with Paragraph 5.02 on the basis of non-conformance with the Contract Documents, Owner shall so notify Contractor in writing thereof within 10 days of the date of delivery of such certificates and other evidence of insurance to Owner required by Paragraph 2.05C.
2. Owner and Contractor shall each provide to the other such additional information in respect of insurance provided as the other may reasonably request If either party does not purchase or maintain all of the insurance required of such party by the Contract Documents, such party shall notify the other party in writing of such failure to purchase prior to the start of the Work, or of such failure to maintain prior to any change in the required coverage. Without prejudice to any other right or remedy, the other party may elect to obtain equivalent insurance to protect such other party's interests at the expense of the party who was required to provide such coverage, and a Change Order shall be issued to adjust the Contract Price accordingly.

I. Partial Utilization, Acknowledgment of Property Insurer:

1. If Owner finds it necessary to occupy or use a portion or portions of the Work prior to Substantial Completion of all the Work as provided in Paragraph 14.06, no such use or occupancy shall commence before the insurers providing property insurance pursuant to Paragraph 5.02D have acknowledged notice thereof and in writing effected any changes in coverage necessitated thereby. The insurers providing the property insurance shall consent by endorsement on the policy or policies, but the property insurance shall not be cancelled or lapse on account of any such partial use or occupancy.

ARTICLE 6 - CONTRACTOR'S RESPONSIBILITIES

6.01 SUPERVISION AND SUPERINTENDENCE:

A. Contractor shall supervise and direct the Work competently and efficiently, devoting such attention thereto and applying such skills and expertise as may be necessary to perform the Work in accordance with the Contract Documents. Contractor shall be solely responsible for and have control over construction means, methods, techniques, sequences, and procedures and for coordinating all portions of the Work, but Contractor shall not be responsible for the negligence of others in the design or selection of a specific means, method, technique, sequence, or procedure of construction which is indicated in and required by the Contract Documents. Contractor shall be responsible to see that the finished Work complies accurately with the Contract Documents.

B. Contractor shall keep on the Work at all times during its progress a competent resident superintendent, who shall not be replaced without written notice to Owner and Engineer except under extraordinary circumstances. The superintendent will be Contractor's representative at the Site and shall have authority to act on behalf of Contractor. All communications given to the superintendent shall be as binding as if given to Contractor.

SECTION 00700 – GENERAL CONDITIONS (continued)

C. When manufacturer's field services in connection with the erection, installation, start-up, or testing of Equipment furnished under this Contract, or instruction of Owner's personnel thereon are specified, Contractor shall keep on the Work, during its progress or as specified, competent manufacturer's field representatives and any necessary assistants.

6.02 LABOR, EQUIPMENT, AND MATERIALS:

A. Contractor shall provide competent, suitably qualified personnel to survey and lay out the Work and perform construction as required by the Contract Documents. Contractor shall at all times maintain good discipline and order at the Site. Except in connection with the safety or protection of persons or the Work or property at the Site or adjacent thereto, and except as otherwise indicated in the Contract Documents.

B. Unless otherwise specified in the General Requirements, Contractor shall furnish and assume full responsibility for all Equipment and Materials, labor, transportation, construction equipment and machinery, tools, appliances, fuel, power, light, heat, telephone, water, sanitary facilities, temporary facilities, and all other facilities and incidentals necessary for the furnishing, performance, testing, start-up, and completion of the Work.

C. All Equipment and Materials shall be of good quality and new, except as otherwise provided in the Contract Documents. If required by Engineer, Contractor shall furnish to Engineer satisfactory evidence (including reports of required tests) as to the kind and quality of Equipment and Materials. All Equipment and Materials shall be applied, installed, connected, erected, used, cleaned, and conditioned in accordance with the instructions of the applicable Supplier except as otherwise provided in the Contract Documents; but no provision of any such instructions will be effective to assign to Engineer, or any of Engineer's consultants, agents, or employees, any duty or authority to supervise or direct the furnishing or performance of the Work or any duty or authority to undertake responsibility contrary to the provisions of Paragraph 9.10C and 9.10D.

D. All Equipment and Materials incorporated in the Work shall be designed to meet the applicable safety standards of federal, state, and local Laws and Regulations.

E. Domestic Product Procurement: As further specified elsewhere in these or referenced documents.

6.03 ADJUSTING PROGRESS SCHEDULE:

A. Contractor shall submit to Engineer for acceptance (to the extent indicated in Paragraph 2.07) adjustments in the progress schedule to reflect the impact thereon of new developments; these will conform generally to the progress schedule then in effect and additionally will comply with any provisions of the General Requirements applicable thereto.

6.04 SUBSTITUTES OR "OR-EQUAL" ITEMS:

A. Whenever an item of Equipment or Material is specified or described in the Contract Documents by using the name of a proprietary item or the name of a particular Supplier, the specification or description is intended to establish the type, function, appearance, and quality required. Unless the specification or description contains or is followed by words reading that no like, equivalent, or "or-equal" item or no

SECTION 00700 – GENERAL CONDITIONS (continued)

substitute is permitted, other items of Equipment or Material of other Suppliers may be submitted by Contractor to Engineer for review under the circumstances described below.

1. "Or-Equal" Items: If in Engineer's sole discretion an item of Equipment or Material proposed by Contractor is functionally equal to that named and sufficiently similar so that no change in related Work will be required, it may be considered by Engineer as an "or-equal" item, in which case review and approval of the proposed item may, in Engineer's sole discretion, be accomplished without compliance with some or all of the requirements for approval of proposed substitute items. For purposes of this Paragraph 6.04A.1, a proposed item of Equipment or Material will be considered functionally equal to an item so named if:
   a. In the exercise of reasonable judgment Engineer determines that: (i) it is at least equal in quality, durability, appearance, strength, and design characteristics; (ii) it will reliably perform at least equally well the function imposed by the design concept of the completed Project as a functioning whole, and;
   b. Contractor certifies that: (i) there is no increase in cost to Owner; and (ii) it will conform substantially, even with deviations, to the detailed requirements of the item named in the Contract Documents.
   c. "Or-Equal" will not be considered until after Award of Contract.
2. Substitute Items:
   a. If in Engineer's sole discretion an item of Equipment or Material proposed by Contractor does not qualify as an "or-equal" item under Paragraph 6.04A.1, it will be considered a proposed substitute item.
   b. Contractor shall submit sufficient information as provided below to allow Engineer to determine that the item of Equipment or Material proposed is essentially equivalent to that named and an acceptable substitute therefor. Requests for review of proposed substitute items of Equipment or Materials will not be accepted by Engineer from anyone other than Contractor.
   c. The procedure for review by Engineer will be as set forth in Paragraph 6.04A.2.d, as may be supplemented in the General Requirements and as Engineer may decide is appropriate under the circumstances.
   d. Contractor shall first make written application to Engineer for review of a proposed substitute item of Equipment or Material that Contractor seeks to furnish or use. The application shall certify that the proposed substitute item will perform adequately the functions and achieve the results called for by the general design, be similar in substance to that specified, and be suited to the same use as that specified. The application will state the extent, if any, to which the use of the proposed substitute will prejudice Contractor's achievement of Substantial Completion on time; whether or not use of the proposed substitute item in the Work will require a change in any of the Contract Documents (or in the provisions of any other direct contract with Owner for work on the Project) to adapt the design to the proposed substitute item; and whether or not incorporation or use of the proposed substitute item in connection

SECTION 00700 – GENERAL CONDITIONS (continued)

with the Work is subject to payment of any license fee or royalty. All variations of the proposed substitute item from that specified will be identified in the application, and available engineering, sales, maintenance, repair, and replacement services will be indicated. The application will also contain an itemized estimate of all costs or credits that will result directly or indirectly from use of such substitute item, including costs of redesign and claims of other contractors affected by any resulting change, all of which will be considered by Engineer in evaluating the proposed substitute item. Engineer may require Contractor to furnish additional data about the proposed substitute item.

e. Substitute items will not be considered until after Award of Contract.

B. If a specific means, method, technique, sequence, or procedure of construction is indicated in or required by the Contract Documents, Contractor may furnish or use a substitute means, method, sequence, technique, or procedure of construction acceptable to Engineer, if Contractor submits sufficient information to allow Engineer to determine that the substitute proposed is equivalent to that indicated or required by the Contract Documents. The procedure for review by Engineer will be similar to that provided in Paragraph 6.04A.2 as applied by Engineer and as may be supplemented in the General Requirements.

C. Engineer will be allowed a reasonable time within which to evaluate each proposed substitute or "or-equal" item. Engineer will be the sole judge of acceptability, and no substitute or "or-equal" will be ordered, installed, or used until Engineer's review is complete, which will be evidenced by either (i) a Change Order for a substitute, or (ii) an approved Submittal for an "or-equal." Owner may require Contractor to furnish at Contractor's expense a special performance guarantee or other surety with respect to any substitute.

D. Engineer will record time required by Engineer and, Engineer's Consultants, in evaluating substitute proposed or submitted by Contractor pursuant to Paragraphs 6.04A.2 and 6.04B and in making changes in the Contract Documents or in the provisions of any other direct contract with Owner for work on the Project occasioned thereby. Whether or not Engineer approves a substitute item so proposed or submitted by Contractor, Contractor shall reimburse Owner for the charges of, Engineer, and Engineer's Consultants for evaluating each such proposed substitute.

6.05 CONCERNING SUBCONTRACTORS, SUPPLIERS, AND OTHERS:

A. Contractor shall not employ any Subcontractor, Supplier, or other person or organization (including those acceptable to Owner and Engineer as indicated in Paragraph 6.05B), whether initially or as a substitute, against whom Owner or Engineer may have reasonable objection. Contractor shall not be required to employ any Subcontractor, Supplier, or other person or organization to furnish or perform any of the Work against whom Contractor has reasonable objection.

B. If the Contract Documents require the identity of certain Subcontractors, Suppliers, or other persons or organizations (including those who are to furnish the principal items of Equipment and Materials) to be submitted to Owner within the required time after Bid opening prior to the Effective Date of the Agreement for acceptance by Owner and Engineer and if Contractor has submitted a list thereof, Owner's or

SECTION 00700 – GENERAL CONDITIONS (continued)

Engineer's 'acceptance (either in writing or by failing to make written objection thereto) of any such Subcontractor, Supplier, or other person or organization so identified may be revoked on the basis of reasonable objection after due investigation, in which case Contractor shall submit an acceptable substitute, the Contract Price will be increased by the difference in the cost occasioned by such substitution, and an appropriate Change Order will be issued or Written Amendment signed. No acceptance by Owner or Engineer of any such Subcontractor, Supplier, or other person or organization shall constitute a waiver of any right of Owner or Engineer to reject defective Work.

C. Contractor shall be fully responsible to Owner and Engineer for all acts and omissions of the Subcontractors, Suppliers, and other persons and organizations performing or furnishing any of the Work under a direct or indirect contract with Contractor just as Contractor is responsible for Contractor's own acts and omissions. Nothing in the Contract Documents shall create any contractual relationship between Owner, or Engineer and any such Subcontractor, Supplier, or other person or organization, nor shall it create any obligation on the part of Owner or Engineer to pay or to see to the payment of any moneys due any such Subcontractor, Supplier, or other person or organization except as may otherwise be required by Laws and Regulations.

D. All Work performed for Contractor by a Subcontractor will be pursuant to an appropriate agreement between Contractor and the Subcontractor which specifically binds the Subcontractor to the applicable terms and conditions of the Contract Documents for the benefit of Owner and Engineer and contains waiver provisions as required by Paragraph 5.02F. Contractor shall pay each Subcontractor a just share of any insurance moneys received by Contractor on account of losses under policies issued pursuant to Paragraph 5.02D.

6.06 PATENT FEES AND ROYALTIES:

A. Contractor shall pay all license fees and royalties and assume all costs incident to the use in the performance of the Work or the incorporation in the Work of any invention, design, process, product, or device which is the subject of patent rights or copyrights held by others. If a particular invention, design, process, product, or device is specified in the Contract Documents for use in the performance of the Work and if to the actual knowledge of Owner or Engineer its use is subject to patent rights or copyrights calling for the payment of any license fee or royalty to others, the existence of such rights shall be disclosed by Owner in the Contract Documents.

B. Contractor shall indemnify and hold harmless Owner and Engineer and anyone directly or indirectly employed by either of them from and against all claims, damages, losses, and expenses (including attorneys' fees and court and arbitration costs) arising out of any infringement of patent rights or copyrights incident to the use in the performance of the Work or resulting from the incorporation in the Work of any invention, design, process, product, or device not specified in the Contract Documents, and shall defend all such claims in connection with any alleged infringement of such rights.

SECTION 00700 – GENERAL CONDITIONS (continued)

6.07 PERMITS:

A. Unless otherwise provided in the Contract Documents, Contractor shall obtain and pay for all construction permits and licenses. Owner shall assist Contractor, when necessary, in obtaining such permits and licenses. Contractor shall pay all governmental charges and inspection fees necessary for the prosecution of the Work, which are applicable at the time of opening of Bids. Fees for permits issued by the City will be waived and the Permits issued by the City necessary for the work are required. Contractor shall pay all charges of utility owners for connections to the Work, and Owner shall pay all charges of such utility owners for capital costs related thereto such as plant investment fees.

6.08 LAWS AND REGULATIONS:

A. Contractor shall give all notices and comply with all Laws and Regulations applicable to furnishing and performance of the Work. Except where otherwise expressly required by applicable Laws and Regulations, neither Owner nor Engineer shall be responsible for monitoring Contractor's compliance with any Laws or Regulations.

B. If Contractor observes that the Specifications or Drawings are at variance with any Laws or Regulations, Contractor shall give Engineer prompt written notice thereof, and any necessary changes will be authorized by one of the methods indicated in Paragraph 3.02. If Contractor performs any Work knowing or having reason to know that it is contrary to such Laws or Regulations, and without such notice to Engineer, Contractor shall bear all costs arising therefrom; however, it shall not be Contractor's primary responsibility to make certain that the Specifications and Drawings are in accordance with such Laws and Regulations.

6.09 TAXES:

A. Contractor shall pay all sales, consumer, use, and other similar taxes required to be paid or withheld by Contractor in accordance with the Laws and Regulations of the place of the Project which are applicable during the performance of the Work.

6.10 USE OF PREMISES:

A. Contractor shall confine construction equipment, the storage of Equipment and Materials, and the operations of workers to the Project Site and land and areas identified in and permitted by the Contract Documents and other land and areas permitted by Laws and Regulations, rights-of-way, permits, and easements, and shall not unreasonably encumber the premises with construction equipment or other equipment and materials. Contractor shall assume full responsibility for any damage to any such land or area, or to the owner or occupant thereof or of any land or areas contiguous thereto, resulting from the performance of the Work. Should any claim be made against Owner or Engineer by any such owner or occupant because of the performance of the Work, Contractor shall promptly attempt to settle with such other party by agreement or otherwise resolve the claim by arbitration or at Law. Contractor shall, to the fullest extent permitted by Laws and Regulations, indemnify and hold Owner and Engineer harmless from and against all claims, damages, losses, and expenses (including, but not limited to, fees of engineers, architects, attorneys and other professionals, and court and arbitration costs) arising directly, indirectly or

SECTION 00700 – GENERAL CONDITIONS (continued)

consequentially out of any action, legal or equitable, brought by any such other party against Owner or Engineer to the extent based on a claim arising out of Contractor's performance of the Work.

B. During the progress of the Work, Contractor shall keep the premises free from accumulations of waste materials, rubbish, and other debris resulting from the Work. At the completion of the Work, Contractor shall remove all waste materials, rubbish, and debris from and about the premises as well as all tools, appliances, construction equipment and machinery, and surplus materials, and shall leave the Site clean and ready for occupancy by Owner. Contractor shall restore to original condition all property not designated for alteration by the Contract Documents.

C. Contractor shall not load nor permit any part of any structure to be loaded in any manner that will endanger the structure, nor shall Contractor subject any part of the Work or adjacent property to stresses or pressures that will endanger it.

6.11 RECORD DOCUMENTS:

A. Contractor shall maintain in a safe place at the Site one record copy of all Drawings, Specifications, Addenda, Written Amendments, Change Orders, Work Change Directives, Field Test Records, Field Orders, and written interpretations and clarifications (issued pursuant to Paragraph 9.04) in good order and annotated to show all changes made during construction. These record documents together with all approved Samples and a counterpart of all approved Submittals shall be available to Engineer for reference. Upon completion of the Work, these record documents and Submittals shall be delivered to Engineer for Owner.

B. Receipt and acceptance of record documents will be a prerequisite for final payment on the Contract.

6.12 SAFETY AND PROTECTION:

A. Contractor shall be responsible for initiating, maintaining, and supervising all safety precautions and programs in connection with the Work. Contractor shall take all necessary precautions for the safety of, and shall provide the necessary protection to prevent damage, injury, or loss to:

1. All employees on the Work and other persons and organizations who may be affected thereby;
2. All the Work and Materials and Equipment to be incorporated therein, whether in storage on or off the Site; and
3. Other property at the Site or adjacent thereto, including trees shrubs, lawns, walks, pavements, roadways, structures, utilities and Underground Facilities not designated for removal, relocation, or replacement in the course of construction.

B. Contractor shall comply with all applicable Laws and Regulations of any public body having jurisdiction for the safety of persons or property or to protect them from damage, injury, or loss; and shall erect and maintain all necessary safeguards for such safety and protection. Contractor shall notify owners of adjacent property and of Underground Facilities and utility owners when prosecution of the Work may affect them, and shall cooperate with them in the protection, removal, relocation, and replacement of their property. All damage, injury or loss to any property referred to in Paragraph 6.12A.2 or 6.12A.3 caused, directly or indirectly, in whole or in part, by

SECTION 00700 – GENERAL CONDITIONS (continued)

Contractor, any Subcontractor, Supplier, or any other person or organization directly or indirectly employed by any of them to perform or furnish any of the Work or anyone for whose acts any of them may be liable, shall be remedied by Contractor (except damage or loss attributable to the fault of Drawings or Specifications or to the acts or omissions of Owner or Engineer or anyone employed by either of them or anyone for whose acts either of them may be liable, and not attributable, directly or indirectly, in whole or in part, to the fault or negligence of Contractor). Contractor's duties and responsibilities for the safety and protection of the Work shall continue until such time as all the Work is completed and Engineer has issued a notice to Owner and Contractor in accordance with Paragraph 14.09A that the Work is acceptable (except as otherwise expressly provided in connection with Substantial Completion).

C. Contractor shall designate a responsible representative at the Site whose duty shall be the prevention of accidents. This person shall be Contractor's superintendent unless otherwise designated in writing by Contractor to Owner and Engineer.

6.13 EMERGENCIES:

A. In emergencies affecting the safety or protection of persons or the Work or property at the Site or adjacent thereto, Contractor, without special instruction or authorization from Engineer or Owner, is obligated to act to prevent threatened damage, injury, or loss. Contractor shall give Engineer prompt written notice if Contractor believes that any significant changes in the Work or variations from the Contract Documents have been caused thereby. If Engineer determines that a change in the Contract Documents is required because of the action taken in response to an emergency, a Change Order will be issued to document the consequences of the changes or variations.

6.14 SUBMITTALS:

A. After checking and verifying all field measurements and after complying with applicable procedures specified in the General Requirements, Contractor shall submit to Engineer for review and acceptance by Engineer, in accordance with the accepted schedule of submissions, copies of Submittals which will bear the required information that Contractor has satisfied Contractor's responsibilities under the Contract Documents with respect to the review of the submission. All submissions will be identified as Engineer may require. The data shown on Submittals will be complete with respect to quantities, dimensions, specified performance and design criteria, materials, and similar data to enable Engineer to review the information as required.

B. Before submission of each Submittal, Contractor shall have determined and verified all quantities, dimensions, specified performance criteria, installation requirements, materials, catalog numbers, and similar data with respect thereto and reviewed or coordinated each Submittal with other Submittals and with the requirements of the Work and the Contract Documents.

C. At the time of each submission, Contractor shall give Engineer specific written notice of each variation that the Submittal may have from the requirements of the Contract Documents, and in addition, shall cause a specific notation to be made on each Submittal submitted to Engineer for review and approval of each such variation.

SECTION 00700 – GENERAL CONDITIONS (continued)

D. Engineer will review Submittals with reasonable promptness, but Engineer's review and acceptance will be only for conformance with the design concept of the Project and for compliance with the information given in the Contract Documents and shall not extend to means, methods, techniques, sequences, or procedures of construction (except where a specific means, method, technique, sequence, or procedure of construction is indicated in or required by the Contract Documents) or to safety precautions or programs incident thereto. The review and approval of a separate item as such will not indicate approval of the assembly in which the item functions. Contractor shall make corrections required by Engineer, and shall return the required number of corrected copies of Submittals and resubmit as required for review and acceptance. Contractor shall direct specific attention in writing to revisions other than the corrections called for by Engineer on previous Submittals.

E. Engineer's review and acceptance of Submittals shall not relieve Contractor from responsibility for any variation from the requirements of the Contract Documents. Contractor shall in writing call Engineer's attention to each and every variation at the time of submission. Engineer will show approval of each such variation by a specific written notation thereof incorporated in or accompanying the Submittal. Acceptance by Engineer shall not relieve Contractor from responsibility for errors or omissions in the Submittals.

F. Where a Submittal is required by the Specifications, any related Work performed prior to Engineer's review and acceptance of the pertinent submission will be the sole expense and responsibility of Contractor.

6.15 CONTINUING THE WORK:

A. Contractor shall carry on the Work and adhere to the progress schedule during all disputes or disagreements with Engineer or Owner. No Work shall be delayed or postponed pending resolution of any disputes or disagreements, except as permitted by Paragraph 15.03 or as Contractor and Owner may otherwise agree in writing.

6.16 INDEMNIFICATION:

A. To the fullest extent permitted by Laws and Regulations, Contractor shall indemnify and hold harmless Owner, Engineer, Engineer's Consultants, and the officers, directors, partners, employees, agents, and other consultants and subcontractors of each and any of them from and against all claims, damages, losses and expenses, direct, indirect, or consequential (including but not limited to fees and charges of engineers, architects, attorneys and other professionals, and court and arbitration costs) arising out of or resulting from the performance of the Work, provided that any such claim, damage, loss, or expense:

1. Is attributable to bodily injury, sickness, disease or death, or to injury to or destruction of tangible property (other than the Work itself) including the loss of use resulting therefrom, and
2. Is caused in whole or in part by any negligent act or omission of Contractor, any Subcontractor, any person, or organization directly or indirectly employed by any of them to perform or furnish any of the Work or anyone for whose acts any of them may be liable, regardless of whether or not it is caused in part by a party indemnified hereunder or arises by or is imposed by Laws and Regulations regardless of the negligence of any such party.

SECTION 00700 – GENERAL CONDITIONS (continued)

B. In any and all claims against Owner or Engineer or any of their consultants, agents, or employees by any employee of Contractor, any Subcontractor, any person, or organization directly or indirectly employed by any of them to perform or furnish any of the Work or anyone for whose acts any of them may be liable, the indemnification obligation under Paragraph 6.16A shall not be limited in any way by any limitation on the amount or type of damages, compensation, or benefits payable by or for Contractor or any such Subcontractor or other person or organization under workers' or workmen's compensation acts, disability benefit acts, or other employee benefit acts.

C. The obligations of Contractor under Paragraph 6.16A shall not extend to the liability of Engineer, Engineer's Consultants, agents, or employees arising out of:
   1. The preparation or approval of maps, drawings, opinions, reports, surveys, Change Orders, designs, or specifications.
   2. The giving of or the failure to give communications by Engineer, their agents, or employees provided such giving or failure to give is the primary cause of injury or damage.

D. If necessary for enforcement of any indemnification and hold harmless requirement herein, or if applicable law requires the Contractor to obtain specified limits of insurance to insure any indemnity obligation; then Contractor shall obtain such applicable coverage with minimum limits not less than any specified in Paragraph 5.02B herein, the cost to be recovered and included in the Contract Price, and any indemnity attributable to the negligence of any indemnified party shall be limited to such insurance.

ARTICLE 7 - OTHER WORK

7.01 RELATED WORK AT SITE:

A. Owner may perform other work related to the Project at the Site by Owner's own forces, have other work performed by utility owners, or let other direct contracts therefor which shall contain General Conditions similar to these. If the fact that such other work is to be performed was not noted in the Contract Documents, written notice thereof will be given to Contractor prior to starting any such other work; and, if Contractor believes that such performance will involve additional expense to Contractor or requires additional time and the parties are unable to agree as to the extent thereof, Contractor may make a claim therefor as provided in Articles 11 and 12.

B. Contractor shall afford each utility owner and other contractor who is a party to such a direct contract (or Owner, if Owner is performing the additional work with Owner's employees) proper and safe access to the Site and a reasonable opportunity for the introduction and storage of materials and equipment and the execution of such work, and shall properly connect and coordinate the Work with theirs; Contractor shall do all cutting, fitting, and patching of the Work that may be required to make its several parts come together properly and integrate with such other work. Contractor shall not endanger any work of others by cutting, excavating, or otherwise altering their work and will only cut or alter their work with the written consent of Engineer and the others whose work will be affected.

SECTION 00700 – GENERAL CONDITIONS (continued)

C. If any part of Contractor's Work depends for proper execution or results upon the work of any such other contractor or utility owner or Owner, Contractor shall inspect and promptly report to Engineer in writing any delays, defects, or deficiencies in such work that render it unavailable or unsuitable for such proper execution and results. Contractor's failure so to report will constitute an acceptance of the other work as fit and proper for integration with Contractor's Work except for latent or nonapparent defects and deficiencies in the other work.

7.02 COORDINATION:

A. If Owner contracts with others for the performance of other work on the Project at the Site, the person or organization who will have authority and responsibility for coordination of the activities among the various prime contractors will be identified in the General Requirements, and the specific matters to be covered by such authority and responsibility will be itemized, and the extent of such authority and responsibilities will be provided.

ARTICLE 8 - OWNER'S RESPONSIBILITIES

8.01 COMMUNICATIONS:

A. Owner shall issue all communications to Contractor through Engineer.

8.02 CHANGE OF ENGINEER :

A. In case of termination of the employment of Engineer, Owner shall appoint, subject to the requirements of Section 00001 CERTIFICATIONS and Arkansas State Law an engineer against whom Contractor makes no reasonable objection, whose status under the Contract Documents shall be that of the former Engineer. Any dispute in connection with such appointment shall be addressed as discussed in Article 16.

8.03 REQUIRED DATA:

A. Owner shall furnish the data required of Owner under the Contract Documents promptly and shall make payments to Contractor promptly after they are due as provided in Paragraphs 14.04A and 14.09A.

8.04 LANDS AND EASEMENTS:

A. Owner's duties in respect of providing lands and easements and providing engineering surveys to establish reference points are set forth in Paragraphs 4.01 and 4.04.

8.05 INSURANCE:

A. Owner's responsibilities in respect of purchasing and maintaining insurance are set forth in Paragraph 5.02.

8.06 CHANGE ORDERS:

A. Owner is obligated to execute Change Orders as indicated in Paragraph 10.01.

SECTION 00700 – GENERAL CONDITIONS (continued)

8.07 INSPECTIONS AND TESTS:

A. Owner's responsibility in respect of certain inspections, tests and approvals is set forth in Paragraph 13.03B.

8.08 STOPPING THE WORK:

A. In connection with Owner's right to stop Work or suspend Work, see Paragraphs 13.06 and 15.02. Paragraph 15.02A deals with Owner's right to terminate services of Contractor under certain circumstances.

8.09 LIMITATIONS ON OWNER'S RESPONSIBILITIES:

A. Owner shall not supervise, direct, or have control or authority over, nor be responsible for, Contractor's means, methods, techniques, sequences, or procedures of construction, or the safety precautions and programs incident thereto, or for any failure of Contractor to comply with Laws and Regulations applicable to the performance of the Work. Owner will not be responsible for Contractor's failure to perform the Work in accordance with the Contract Documents.

ARTICLE 9 - ENGINEER'S STATUS DURING CONSTRUCTION

9.01 OWNER'S REPRESENTATIVE:

A. Engineer will be Owner's representative during the construction period. The duties and responsibilities and the limitations of authority of Engineer as Owner's representative during construction are set forth in the Contract Documents and shall not be extended without written consent of Owner and Engineer.

B. Owner and Contractor are reminded of the requirements of Arkansas State Law **§22-9-101.** Observation by registered professionals required.

9.02 VISITS TO SITE:

A. Engineer will make visits to the Site at intervals appropriate to the various stages of construction to observe the progress and quality of the executed Work and to determine, in general, if the Work is proceeding in accordance with the Contract Documents. Engineer will not be required to make exhaustive or continuous on-Site inspections to check the quality or quantity of the Work. Engineer's efforts will be directed toward providing for Owner a greater degree of confidence that the completed Work will conform to the Contract Documents. On the basis of such visits and on-Site observations as an experienced and qualified design professional, Engineer will keep Owner informed of the progress of the Work and will endeavor to guard Owner against defects and deficiencies in the Work.

9.03 PROJECT REPRESENTATION:

A. Engineer may furnish Resident Project Representative and assistants to assist Owner and Engineer in observing the performance of the Work.
   1. Communications pertaining to Submittals, written interpretations, and Change Orders shall be directed to Engineer at his home office.
   2. Communications pertaining to day-to-day operations at the Site shall be directed to Resident Project Representative.

SECTION 00700 – GENERAL CONDITIONS (continued)

3. Resident Project Representative and his assistants will conduct observations of the Work in progress to assist Engineer in determining that the Work is proceeding in accordance with the Contract Documents.
4. Resident Project Representative will not have authority to permit any deviation from the Contract Documents, except with concurrence of Owner and Engineer.

9.04 CLARIFICATIONS AND INTERPRETATIONS:

A. Engineer will issue with reasonable promptness such written clarifications or interpretations of the requirements of the Contract Documents (in the form of drawings or otherwise) as Engineer may determine necessary, which shall be consistent with or reasonably inferable from the overall intent of the Contract Documents. If Contractor believes that a written clarification or interpretation justifies an increase in the Contract Price or an extension of the Contract Times and the parties are unable to agree to the amount or extent thereof, Contractor may make a claim therefor as provided in Article 11 or Article 12.

9.05 AUTHORIZED VARIATIONS IN WORK:

A. Engineer may authorize minor variations in the Work from the requirements of the Contract Documents which do not involve an adjustment in the Contract Price or the Contract Times and are consistent with the overall intent of the Contract Documents. These may be accomplished by a Field Order and will be binding on Owner, and also on Contractor who shall perform the Work involved promptly.

9.06 REJECTING DEFECTIVE WORK:

A. Engineer will have authority to disapprove or reject Work which Engineer believes to be defective, and will also have authority to require special inspection or testing of the Work as provided in Paragraph 13.05B, whether or not the Work is fabricated, installed, or completed.

B. Resident Project Representative will have authority, subject to final decision of Engineer, to disapprove or reject any defective workmanship, Equipment, or Material.

9.07 SUBMITTALS, CHANGE ORDERS, AND PAYMENTS:

A. In connection with Engineer's responsibility for Submittals, see Paragraph 6.14.

B. In connection with Engineer's responsibilities as to Change Orders, see Articles 10, 11, and 12.

C. In connection with Engineer's responsibilities in respect of Applications for Payment, see Article 14.

9.08 DETERMINATIONS FOR UNIT PRICES:

A. Engineer will determine the actual quantities and classifications of Unit Price Work performed by Contractor. Engineer will review with Contractor the Engineer's preliminary determinations on such matters before rendering a written decision thereon to the Owner. Engineer will provide approval by recommendation of an Application for Payment to the Owner or return Application to Engineer for further review.

SECTION 00700 – GENERAL CONDITIONS (continued)

B. Engineer's written decisions thereon will be final and binding upon Owner and Contractor, unless, within ten days after the date of any such decision, either Owner or Contractor delivers to the other party to the Agreement and to Engineer written notice of intention to appeal such a decision.

9.09 DECISIONS ON DISPUTES:

A. Engineer will be the initial interpreter of the requirements of the Contract Documents and judge of the acceptability of the Work thereunder. Claims, disputes, and other matters relating to the acceptability of the Work or the interpretation of the requirements of the Contract Documents pertaining to the performance and furnishing of the Work and claims under Articles 11 and 12 in respect of changes in the Contract Price or Contract Times will be referred initially to Engineer in writing with a request for a formal decision in accordance with this Paragraph, which Engineer will render in writing within a reasonable time. Written notice of each such claim, dispute, and other matter will be delivered by the claimant to Engineer and the other party to the Agreement promptly (but in no event later than 30 days) after the occurrence of the event giving rise thereto, and written supporting data shall be delivered to Engineer and the other party within 60 days after such occurrence unless Engineer allows an additional period of time to ascertain more accurate data in support of the claim. Owner may request written review by Engineer of claims, disputes, and other matters relating to the acceptability of the Work or the interpretation of the requirements of the Contract Documents.

B. When functioning as interpreter and judge under Paragraphs 9.08 and 9.09A, Engineer will not show partiality to Owner or Contractor and Engineer will not be liable in connection with any interpretation or decision rendered in good faith in such capacity. The rendering of a decision by Engineer with respect to any such claim, dispute, or other matter (except any which have been waived by the making or acceptance of final payment as provided in Paragraph 14.11) will be a condition precedent to any exercise by Owner or Contractor of such rights or remedies as either may otherwise have under the Contract Documents or by Laws or Regulations in respect of any such claim, dispute, or other matter.

9.10 LIMITATIONS ON ENGINEER'S RESPONSIBILITIES:

A. Neither Engineer's authority to act under this Article 9 or elsewhere in the Contract Documents nor any decision made by Engineer in good faith either to exercise or not exercise such authority shall give rise to any duty or responsibility of Engineer to Contractor, any Subcontractor, any Supplier, or any other person or organization performing any of the Work, or to any surety for any of them.

B. Whenever in the Contract Documents the terms "as directed", "as required", "as allowed", "as approved", or terms of like effect or import are used, or the adjectives "reasonable", "suitable", "acceptable", "proper", or "satisfactory" or adjectives of like effect or import are used to describe a requirement, direction, review, or judgment of Engineer as to the Work, it is intended that such requirement, direction, review or judgment will be solely to evaluate the Work for compliance with the Contract Documents (unless there is a specific statement indicating otherwise). The use of any such term or adjective shall not be effective to assign to Engineer any duty or authority to supervise or direct the furnishing or performance of the Work or any

duty or authority to undertake responsibility contrary to the provisions of Paragraphs 9.10C or 9.10D.

C. Engineer will not supervise, direct, control, or have authority over or be responsible for Contractor's means, methods, techniques, sequences, or procedures of construction, or the safety precautions and programs incident thereto, or for any failure of Contractor to comply with Laws and Regulations applicable to the performance of the Work. Engineer will not be responsible for Contractor's failure to perform or furnish the Work in accordance with the Contract Documents.

D. Engineer will not be responsible for the acts or omissions of Contractor or of any Subcontractor, any Supplier, or of any other person or organization performing or furnishing any of the Work.

E. The presence or absence of Engineer, or any of their representatives will not act to relieve Contractor of any responsibility or of any guarantee of his performance. Neither will observation by Engineer, or any of their representatives in any way be understood to relieve Contractor of any responsibility for proper supervision of the Work at all times.

F. Review by Engineer of the final Application for Payment and accompanying documentation and all maintenance and operating instructions, schedules, guarantees, Bonds, certificates of inspection, tests and approvals, and other documentation required to be delivered by Paragraph 14.08A will only be to determine generally that their content complies with the requirements of, and in the case of certificates of inspections, tests, and approvals that the results certified indicate compliance with, the Contract Documents.

G. The limitations upon authority and responsibility set forth in this Paragraph 9.10 shall also apply to Engineer's Consultants, Resident Project Representative, and assistants.

ARTICLE 10 - CHANGES IN THE WORK

10.01 GENERAL:

A. Without invalidating the Agreement and without notice to any surety, Owner may, at any time or from time to time, order additions, deletions, or revisions in the Work; these will be authorized by a Written Amendment, a Change Order, or a Work Change Directive. Upon receipt of any such document, Contractor shall promptly proceed with the Work involved which shall be performed under the applicable conditions of the Contract Documents (except as otherwise specifically provided).

1. There shall be no changes without prior written approval of the Engineer of Record and/or the City's designated Professional Engineer.

B. If Owner and Contractor are unable to agree as to the extent, if any, of an increase or decrease in the Contract Price or an extension or a shortening of the Contract Times that should be allowed as a result of a Work Change Directive, a claim may be made therefore as provided in Article 11 or 12.

C. Contractor shall not be entitled to an increase in the Contract Price or an extension of the Contract Times with respect to any Work performed that is not required by the Contract Documents as amended, modified, and supplemented as provided in Paragraphs 3.02A and 3.02C, except in the case of an emergency as provided in

SECTION 00700 – GENERAL CONDITIONS (continued)

Paragraph 6.13 and except in the case of uncovering Work as provided in Paragraph 13.05B.

D. Owner and Contractor shall execute appropriate Change Orders (or Written Amendments) covering:
   1. Changes in the Work which are ordered by Owner pursuant to Paragraph 10.01A, are required because of acceptance of defective Work under Paragraph 13.09 or correcting defective Work under Paragraph 13.10, or are agreed to by the parties;
   2. Changes in the Contract Price or Contract Times which are agreed to by the parties; and
   3. Changes in the Contract Price or Contract Times which embody the substance of any written decision rendered by Engineer pursuant to Paragraph 9.09A, provided that, in lieu of executing any such Change Order, an appeal may be taken from any such decision in accordance with the provisions of the Contract Documents and applicable Laws and Regulations, but during any such appeal, Contractor shall carry on the Work and adhere to the progress schedule as provided in Paragraph 6.15.

E. If notice of any change affecting the general scope of the Work or the provisions of the Contract Documents (including, but not limited to, Contract Price or Contract Times) is required by the provisions of any Bond to be given to a surety, the giving of any such notice will be Contractor's responsibility, and the amount of each applicable Bond will be adjusted accordingly.

ARTICLE 11 - CHANGE OF CONTRACT PRICE

11.01 GENERAL:

A. The Contract Price constitutes the total compensation (subject to authorized adjustments) payable to Contractor for performing the Work. All duties, responsibilities, and obligations assigned to or undertaken by Contractor shall be at his expense without change in the Contract Price.

B. The Contract Price may only be changed by a Change Order or a Written Amendment. Any claim for an increase or decrease in the Contract Price shall be based on written notice delivered by the party making the claim to the other party and to Engineer promptly (but in no event later than 30 days) after the occurrence of the event giving rise to the claim and stating the general nature of the claim. Notice of the amount of the claim with supporting data shall be delivered within 60 days after such occurrence (unless Engineer allows an additional period of time to ascertain more accurate data in support of the claim) and shall be accompanied by claimant's written statement that the amount claimed covers all known amounts (direct, indirect, and consequential) to which the claimant is entitled as a result of the occurrence of said event. All claims for adjustment in the Contract Price shall be determined by Engineer in accordance with Paragraph 9.09A if Owner and Contractor cannot otherwise agree on the amount involved. No claim for an adjustment in the Contract Price will be valid if not submitted in accordance with this Paragraph 11.01B.

SECTION 00700 – GENERAL CONDITIONS (continued)

C. The value of any Work covered by a Change Order or of any claim for an increase or decrease in the Contract Price shall be determined in one of the following ways:
   1. Where the Work involved is covered by Unit Prices contained in the Contract Documents, by application of Unit Prices to the quantities of the items involved (subject to the provisions of Paragraphs 11.05A through 11.05C, inclusive).
   2. By mutual acceptance of a lump sum (which may include an allowance for overhead and profit not necessarily in accordance with Paragraph 11.03A.2.a.
   3. On the basis of the Cost of the Work (determined as provided in Paragraphs 11.02A and 11.02B) plus a Contractor's Fee for overhead and profit (determined as provided in Paragraphs 11.03A and 11.03B).

11.02 COST OF THE WORK:

A. The term Cost of the Work means the sum of all costs necessarily incurred and paid by Contractor in the proper performance of the Work. Except as otherwise may be agreed to in writing by Owner, such costs shall be in amounts no higher than those prevailing in the locality of the Project, shall include only the following items and shall not include any of the costs itemized in Paragraph 11.02B.
   1. Payroll costs for employees in the direct employ of Contractor in the performance of the Work under schedules of job classifications agreed upon by Owner and Contractor. Payroll costs for employees not employed full time on the Work shall be apportioned on the basis of their time spent on the Work. Payroll costs shall include, but not be limited to, salaries and wages plus the cost of fringe benefits which shall include social security contributions, unemployment, excise and payroll taxes, workers' or workmen's compensation, health and retirement benefits, bonuses, sick leave, vacation, and holiday pay applicable thereto. Such employees shall include superintendents and foremen at the Site. The expenses of performing Work after regular working hours, on Saturday, Sunday, or legal holidays, shall be included in the above to the extent authorized by Owner.
   2. Cost of all Equipment and Materials furnished and incorporated in the Work, including costs of transportation and storage thereof, and Suppliers' field services required in connection therewith. All cash discounts shall accrue to Contractor unless Owner deposits funds with Contractor with which to make payments, in which case the cash discounts shall accrue to Owner. All trade discounts, rebates and refunds, and all returns from sale of surplus materials and equipment shall accrue to Owner, and Contractor shall make provisions so that they may be obtained.
   3. Payments made by Contractor to the Subcontractors for Work performed by Subcontractors. If required by Owner, Contractor shall obtain competitive bids from Subcontractors acceptable to Contractor and shall deliver such bids to Owner who will then determine, with the advice of Engineer, which bids will be accepted. If a subcontract provides that the Subcontractor is to be paid on the basis of Cost of the Work Plus a Fee, the Subcontractor's Cost of the Work shall be determined in the same manner as Contractor's Cost of the Work. All subcontracts shall be subject to the other provisions of the Contract Documents insofar as applicable.

SECTION 00700 – GENERAL CONDITIONS (continued)

4. Costs of special consultants (including but not limited to engineers, architects, testing laboratories, surveyors, attorneys, and accountants) employed for services specifically related to the Work.
5. Supplemental costs including the following:
   a. The proportion of necessary transportation, travel, and subsistence expenses of Contractor's employees incurred in discharge of duties connected with the Work.
   b. Costs, including transportation and maintenance, of all materials, supplies, equipment, machinery, appliances, office and temporary facilities at the Site, and hand tools not owned by the workers, which are consumed in the performance of the Work, and cost less market value of such items used but not consumed which remain the property of Contractor.
   c. Rentals of all construction equipment and machinery and the parts thereof whether rented from Contractor or others in accordance with rental agreements approved by Owner with the advice of Engineer, and the costs of transportation, loading, unloading, installation, dismantling, and removal thereof - all in accordance with terms of said rental agreements. The rental of any such equipment, machinery, or parts shall cease when the use thereof is no longer necessary for the Work.
   d. Sales, consumer, use, or similar taxes related to the Work, and for which Contractor is liable, imposed by Laws and Regulations.
   e. Deposits lost for causes other than negligence of Contractor, any Subcontractor, or anyone directly or indirectly employed by any of them or for whose acts any of them may be liable, and royalty payments and fees for permits and licenses.
   f. Losses and damages not compensated by insurance or otherwise, to the Work or otherwise sustained by Contractor in connection with the performance and furnishing of the Work provided they have resulted from causes other than the negligence of Contractor, any Subcontractor, or anyone directly or indirectly employed by any of them or for whose acts any of them may be liable; shall include settlements made with the written consent and approval of Owner. No such losses, damages, and expenses shall be included in the cost of the Work for the purpose of determining Contractor's fee. If, however, any such loss or damage requires reconstruction and Contractor is placed in charge thereof, Contractor shall be paid for services a fee proportionate to that stated in Paragraph 11.03A.2.
   g. The cost of utilities, fuel, and sanitary facilities at the Site.
   h. Minor expenses such as telegrams, long distance telephone calls, telephone service at the Site, expressage, and similar petty cash items in connection with the Work.
   i. Cost of premiums for additional Bonds and insurance required because of changes in the Work and premiums for property insurance coverage within the limits of the deductible amounts established by Owner in accordance with Paragraph 5.02D.4.

SECTION 00700 – GENERAL CONDITIONS (continued)

B. The term Cost of the Work shall not include any of the following:
   1. Payroll costs and other compensation of Contractor's officers, executives, principals (of partnerships and sole proprietorships), general managers, engineers, architects, estimators, attorneys, auditors, accountants, purchasing and contracting agents, expediters, timekeepers, clerks, and other personnel employed by Contractor whether at the Site or in Contractor's principal or a branch office for general administration of the Work and not specifically included in the agreed upon schedule of job classifications referred to in Paragraph 11.02A.1 or specifically covered by Paragraph 11.02A.4, all of which are to be considered administrative costs covered by the Contractor's fee.
   2. Expenses of Contractor's principal and branch offices other than Contractor's office at the Site.
   3. Any part of Contractor's capital expenses, including interest on Contractor's capital employed for the Work, and charges against Contractor for delinquent payments.
   4. Cost of premiums for all Bonds and for all insurance whether or not Contractor is required by the Contract Documents to purchase and maintain the same (except for the cost of premiums covered by subparagraph 11.02A.5.i above).
   5. Costs due to the negligence of Contractor, any Subcontractor, or anyone directly or indirectly employed by any of them or for whose acts any of them may be liable, including but not limited to, the correction of defective Work, disposal of materials or equipment wrongly supplied, and making good any damage to property.
   6. Other overhead or general expense costs of any kind and the costs of any item not specifically and expressly included in Paragraph 11.02A.

11.03 CONTRACTOR'S FEE:

A. The Contractor's Fee allowed to Contractor for overhead and profit shall be determined as follows:
   1. A mutually acceptable fixed fee; or if none can be agreed upon,
   2. A fee based on the following percentages of the various portions of the Cost of the Work:
      a. For costs incurred under Paragraphs 11.02A.1 and 11.02A.2, the Contractor's Fee shall be 10%(negotiable with Owner);
      b. For costs incurred under Paragraph 11.02A.3, the Contractor's Fee shall be 5%; and if a subcontract is on the basis of Cost of the Work Plus a Fee, the maximum allowable to Contractor on account of overhead and profit of all Subcontractors shall be 10%(negotiable with Owner);
      c. Where one or more tiers of subcontracts are on the basis of the Cost of the Work Plus a Fee and no fixed fee is agreed upon, the intent of Paragraphs 11.03A and 11.02A.1 through A.3 is that the Subcontractor who actually performs or furnishes the Work, at whatever tier, will be paid a fee of ten percent (10%) of the costs incurred by such Subcontractor under Paragraphs 11.02A.1 and 11.02A.2 and that any higher tier Subcontractor and Contractor will each be paid a fee of five percent (5%) of the amount paid to the next lower tier Subcontractor.

SECTION 00700 – GENERAL CONDITIONS (continued)

d. No fee shall be payable on the basis of costs itemized under Paragraph 11.02A.4, 11.02A.5 and 11.02B;
e. The amount of credit to be allowed by Contractor to Owner for any such change which results in a net decrease in cost will be the amount of the actual net decrease plus a deduction in Contractor's Fee by an amount equal to 10% of the net decrease; and
f. When both additions and credits are involved in any one change, the adjustment in Contractor's Fee shall be computed on the basis of the net change in accordance with Paragraphs 11.03A.2.a through 11.03A.2.d, inclusive.

B. Whenever the cost of any Work is to be determined pursuant to Paragraph 11.02A or 11.02B, Contractor will submit in form acceptable to Engineer an itemized cost breakdown together with supporting data.

11.04 CASH ALLOWANCES:

A. Not applicable.

11.05 UNIT PRICE WORK:

A. Where the Contract Documents provide that all or part of the Work is to be Unit Price Work, initially the Contract Price will be deemed to include for all Unit Price Work an amount equal to the sum of the established Unit Prices for each separately identified item of Unit Price Work times the estimated quantity of each item as indicated in the Agreement. The estimated quantities of items of Unit Price Work are not guaranteed and are solely for the purpose of comparison of Bids and determining an initial Contract Price. Determinations of the actual quantities and classifications of Unit Price Work performed by Contractor will be made by Engineer in accordance with Paragraph 9.08.

B. Each Unit Price will be deemed to include an amount considered by Contractor to be adequate to cover Contractor's overhead and profit for each separately identified item.

C. Where the quantity of any item of Unit Price Work performed by Contractor exceeds the estimated quantity of such item indicated in the Agreement by twenty-five percent or more and there is no corresponding adjustment with respect to any other item of Work and if Contractor believes that Contractor has incurred additional expense as a result thereof, Contractor may make a claim for an increase in the Contract Price in accordance with Article 11 if the parties are unable to agree as to the amount of any such increase.

11.06 RIGHT OF AUDIT:

A. Owner shall have the right to inspect and audit all of Contractor's books, records, correspondence, instructions, drawings, receipts, payment records, vouchers, and memoranda relating to the Work, and Contractor shall preserve all such records and supporting documentation for a period of three years after date of Final Payment. Contractor hereby grants to Owner the authority to enter Contractor's premises for the purpose of inspection of such records and supporting documentation or, at Contractor's option, Contractor may make such records and supporting documentation available to Owner at a location satisfactory to Owner.

SECTION 00700 – GENERAL CONDITIONS (continued)

B. All of the records and supporting documentation shall be open to inspection and subject to audit and reproduction by Owner or its authorized representative for any and all purposes, including but not limited to (i) compliance with the Contract Documents; (ii) proper pricing of Change Orders; and (iii) claims submitted by or against Contractor or any Subcontractor or Supplier in connection with any performance under the Contract Documents.

ARTICLE 12 - CHANGE OF CONTRACT TIMES

12.01 GENERAL:

A. The Contract Times may only be changed by a Change Order or a Written Amendment. Contractor, in undertaking to complete the Work within the Contract Times, shall take into consideration and make allowances for all of the ordinary delays and hindrances incident to such Work, whether growing out of delays in securing equipment or materials or workmen or otherwise.

B. Adjustments to the Contract Times will be made for delays in completion of the Work from causes beyond Contractor's control, including the following:

1. Federal embargoes, priority orders, or other restrictions imposed by the United States Government.
2. Unusual delay in fabrication or shipment of Equipment or Materials required in the Work, whether ordered by Contractor or furnished by Owner or others under separate contract.
3. Strikes and other labor disputes.
4. Delays caused by court proceedings.
5. Change Orders.
6. Neglect, delay, or default of any other contractor employed by Owner.
7. Unusual construction delays resulting from weather conditions abnormal to the geographical area and to the season of the year such as above normal continuous days of precipitation, above normal amount of precipitation within a 24 hour period, or above normal days of extreme cold or hot temperature conditions affecting installation / application due to manufacturers or specifications limitations. These conditions will not be cause for extensions of time if abnormal weather conditions do not affect the stage of construction. All claims for extension of time due to abnormal weather conditions must be substantiated with evidence from a weather bureau or other authoritative source. Weather conditions normal to the geographical area and to the season of the year shall be taken into consideration in the Bid. Normal conditions shall be defined as the average number of days, amounts, or both over a 5-year period averaged per season.
8. Conflicts, errors or discrepancies in the Contract Documents reported to Engineer as provided in these General Conditions.
9. Any failure or delay by Contractor in supplying equipment, materials, work, or services that are Year 2000 compliant or failure or delay by Contractor's Subcontractors or Suppliers in providing equipment, materials, work, or services as a result of Subcontractors' or Suppliers' lack of Year 2000 compliance in their own operations, systems, or processes used to provide or deliver equipment, material, work, or services shall not be considered to be caused by events beyond Contractor's control. Such Year 2000 compliance

problems shall not constitute a basis for delay in completion of the Work, adjustment to the Contract Times, or an excuse for Contract nonperformance.

C. Owner shall award extensions of the Contract Times on account of such causes of delay, provided that adequate evidence is presented to enable Engineer to determine with exactness the extent and duration of delay for each item involved.

D. No extension to the Contract Times will be granted for delays involving only portions of the Work, or which do not directly affect the time required for completion of the entire Work.

E. Any claim for an extension to the Contract Times shall be delivered in writing to Owner and Engineer within ten days of the occurrence of the event giving rise to the claim. All claims for adjustment to the Contract Times will be determined by Engineer if Owner and Contractor cannot otherwise agree. Any change to the Contract Times resulting from any such claim will be incorporated in a Change Order or a Written Amendment.

F. All time limits stated in the Contract Documents are of the essence of the Agreement. The provisions of this Article 12 shall not exclude recovery for damages (including but not limited to fees and charges of engineers, architects, attorneys and other professionals, and court and arbitration costs) for delay by either party.

ARTICLE 13 - WARRANTY AND GUARANTEE; TESTS AND INSPECTIONS; CORRECTION, REMOVAL, OR ACCEPTANCE OF DEFECTIVE WORK

13.01 WARRANTY AND GUARANTEE:

A. Contractor warrants and guarantees to Owner and Engineer that all Work will be in accordance with the Contract Documents and will not be defective. Prompt notice of all defects shall be given to Contractor. All defective Work, whether or not in place, may be rejected, corrected or accepted as provided in this Article 13.

B. No provision in the Contract Documents nor any specified guarantee time limit shall be held to limit Contractor's liability for defects to less than the legal limit of liability in accordance with the Law.

C. All Equipment and Materials furnished by Contractor for the Work shall carry a written guarantee from the manufacturer or Supplier of such items when called for in the Specifications. Written guarantees shall be submitted to Engineer with other Submittals. Engineer will transmit such guarantees to Owner for review.

13.02 ACCESS TO THE WORK:

A. Engineer and Engineer's representatives, other representatives of Owner, testing agencies, and governmental agencies with jurisdictional interests will have access to the Work at reasonable times for their observation, inspecting, and testing. Contractor shall provide proper and safe conditions for such access.

13.03 TESTS AND INSPECTIONS:

A. Contractor shall give Engineer timely notice of readiness of the Work for all required inspections, tests, or approvals and shall cooperate with inspection and testing personnel.

SECTION 00700 – GENERAL CONDITIONS (continued)

B. Owner shall employ and pay for the services of an independent testing laboratory to perform all inspections, tests, or approvals required by the Contract Documents except:
   1. for inspections, tests, or approvals covered by Paragraphs 13.03C and 13.03D below;
   2. that costs incurred in connections with tests or inspections conducted pursuant to Paragraph 13.05B shall be paid as provided in said Paragraph 13.05B; and
   3. as otherwise specifically provided in the Contract Documents.

C. If Laws or Regulations of any public body having jurisdiction require any Work (or part thereof) to specifically be inspected, tested, or approved, Contractor shall assume full responsibility therefor, pay all costs in connection therewith, and furnish Engineer the required certificates of inspection, testing, or approval.

D. Contractor shall also be responsible for and shall pay all costs in connection with any inspection or testing required in connection with Owner's or Engineer's acceptance of a Supplier of Materials or Equipment proposed to be incorporated in the Work, or of Materials or Equipment submitted for approval prior to Contractor's purchase thereof for incorporation in the Work.

E. All inspections, tests, or approvals other than those required by Laws or Regulations of any public body having jurisdiction shall be performed by organizations acceptable to Owner and Contractor (or by Engineer if so specified).

F. If any Work (including the work of others) that is to be inspected, tested, or approved is covered without written concurrence of Engineer, it must, if requested by Engineer, be uncovered for observation. Such uncovering shall be at Contractor's expense unless Contractor has given Engineer timely notice of Contractor's intention to cover the same and Engineer has not acted with reasonable promptness in response to such notice.

G. Neither observations by Engineer nor inspections, tests, or approvals by others shall relieve Contractor from Contractor's obligations to perform the Work in accordance with the Contract Documents.

13.04 DEFECTIVE WORK:

A. The term "defective" is used in these documents to describe Work that is unsatisfactory, faulty, not in conformance with the requirements of the Contract Documents, or not meeting the requirements of any inspection, test, approval, or acceptance required by Law or the Contract Documents.

B. Any defective Work may be disapproved or rejected by Engineer at any time before final acceptance even though it may have been overlooked and included in a previous Application for Payment.

C. Prompt notice will be given by Engineer to Contractor of defects as they become evident.

13.05 UNCOVERING WORK:

A. If any Work is covered contrary to the written request of Engineer, it shall, if requested by Engineer, be uncovered for Engineer's observation and replaced at Contractor's expense.

SECTION 00700 – GENERAL CONDITIONS (continued)

B. If Engineer considers it necessary or advisable that covered Work be observed by Engineer or inspected or tested by others, Contractor, at Engineer's request, shall uncover, expose, or otherwise make available for observation, inspection, or testing as Engineer may require, that portion of the Work in question, furnishing all necessary labor, material, and equipment. If it is found that such Work is defective, Contractor shall bear all direct, indirect, and consequential costs of such uncovering, exposure, observation, inspection, and testing and of satisfactory reconstruction, (including but not limited to fees and charges of engineers, architects, attorneys, and other professionals); and Owner shall be entitled to an appropriate decrease in the Contract Price, and, if the parties are unable to agree as to the amount thereof, may make a claim therefor as provided in Article 11. If, however, such Work is not found to be defective, Contractor shall be allowed an increase in the Contract Price or an extension of the Contract Times, or both, directly attributable to such uncovering, exposure, observation, inspection, testing, and reconstruction; and, if the parties are unable to agree as to the amount or extent thereof, Contractor may make a claim therefor as provided in Articles 11 and 12.

13.06 OWNER MAY STOP THE WORK:

A. If the Work is defective, or Contractor fails to supply sufficient skilled workers or suitable materials or equipment, or fails to furnish or perform the Work in such a way that the completed Work will conform to the Contract Documents, Owner may order Contractor to stop the Work, or any portion thereof, until the cause for such order has been eliminated; however, this right of Owner to stop the Work shall not give rise to any duty on the part of Owner to exercise this right for the benefit of Contractor or any other party.

13.07 CORRECTION OR REMOVAL OF DEFECTIVE WORK:

A. If required by Engineer, Contractor shall promptly, as directed, either correct all defective Work, whether or not fabricated, installed or completed, or, if the Work has been rejected by Engineer, remove it from the Site and replace it with nondefective Work. Contractor shall bear all direct, indirect, and consequential costs of such correction or removal (including but not limited to fees and charges of engineers, architects, attorneys, and other professionals) made necessary thereby.

13.08 TWO-YEAR WARRANTY AND CORRECTION PERIOD:

A. Before final acceptance of the project, the contractor shall provide a maintenance bond in accordance with section 158.03 of the City of Fayetteville Unified Development Code. The bond shall be in the amount of 25% of the total contract price for a period of two years from the date of Substantial Completion. If within two years after the Date of Substantial Completion or such longer period of time as may be prescribed by Laws or Regulations or by the terms of any applicable special guarantee required by the Contract Documents or by any specific provision of the Contract Documents, any Work is found to be defective, Contractor shall promptly, without cost to Owner and in accordance with Owner's written instructions, either correct such defective Work, or, if it has been rejected by Owner, remove it from the Site and replace it with nondefective Work. If Contractor does not promptly comply with the terms of such instructions, or in an emergency where delay would cause serious risk of loss or damage, Owner may have the defective Work corrected or the

SECTION 00700 – GENERAL CONDITIONS (continued)

rejected Work removed and replaced, and all direct, indirect, and consequential costs of such removal and replacement (including but not limited to fees and charges of engineers, architects, attorneys, and other professionals) will be paid by Contractor. In special circumstances where a particular item of Equipment is placed in continuous service before Substantial Completion of all the Work, the correction period for that item may start to run from an earlier date if so provided in the Specifications or by Written Amendment.

13.09 ACCEPTANCE OF DEFECTIVE WORK:

A. If, instead of requiring correction or removal and replacement of defective Work, Owner and, prior to Engineer's recommendation of final payment, also Engineer prefers to accept it, Owner may do so. Contractor shall bear all direct, indirect, and consequential costs attributable to Owner's evaluation of and determination to accept such defective Work (such costs to be approved by Engineer as to reasonableness and to include but not be limited to fees and charges of engineers, architects, attorneys, and other professionals). If any such acceptance occurs prior to Engineer's recommendation of final payment, a Change Order will be issued incorporating the necessary revisions in the Contract Documents with respect to the Work; and Owner shall be entitled to an appropriate decrease in the Contract Price, and, if the parties are unable to agree as to the amount thereof, Owner may make a claim therefor as provided in Article 11. If the acceptance occurs after such recommendation, an appropriate amount will be paid by Contractor to Owner.

13.10 OWNER MAY CORRECT DEFECTIVE WORK:

A. If Contractor fails within a reasonable time after written notice of Engineer to proceed to correct and to correct defective Work or to remove and replace rejected Work as required by Engineer in accordance with Paragraph 13.07, or if Contractor fails to perform the Work in accordance with the Contract Documents, or if Contractor fails to comply with any other provision of the Contract Documents, Owner may, after seven days' written notice to Contractor, correct and remedy any such deficiency. In exercising the rights and remedies under this Paragraph, Owner shall proceed expeditiously.

B. To the extent necessary to complete corrective and remedial action, Owner may exclude Contractor from all or part of the Site, take possession of all or part of the Work, and suspend Contractor's services related thereto, take possession of Contractor's tools, appliances, construction equipment, and machinery at the Site and incorporate in the Work all Equipment and Materials stored at the Site or for which Owner has paid Contractor but which are stored elsewhere.

C. Contractor shall allow Owner, Owner's representatives, agents, and employees such access to the Site as may be necessary to enable Owner to exercise the rights and remedies under this Paragraph.

D. All direct, indirect, and consequential costs of Owner in exercising such rights and remedies will be charged against Contractor in an amount approved as to reasonableness by Engineer,, and a Change Order will be issued incorporating the necessary revisions in the Contract Documents with respect to the Work; and Owner shall be entitled to an appropriate decrease in the Contract Price, and, if the parties are unable to agree as to the amount thereof, Owner may make a claim therefor as

SECTION 00700 – GENERAL CONDITIONS (continued)

provided in Article 11. Such direct, indirect, and consequential costs will include but not be limited to fees and charges of engineers, architects, attorneys and other professionals, all court and arbitration costs, and all costs of repair and replacement of work of others destroyed or damaged by correction, removal, or replacement of Contractor's defective Work.

E. Contractor shall not be allowed an extension of the Contract Times because of any delay in performance of the Work attributable to the exercise by Owner of Owner's rights and remedies hereunder.

ARTICLE 14 - PAYMENTS TO CONTRACTOR AND COMPLETION

14.01 SCHEDULE OF VALUES:

A. The schedule of values established will serve as the basis for progress payments and will be incorporated into a form of Application for Payment acceptable to Engineer. Progress payments on account of Unit Price Work will be based on the number of units completed.

14.02 APPLICATION FOR PROGRESS PAYMENT:

A. Not later than the 15th day of each month, or on the next business day thereafter, (but not more often than once a month), Contractor shall submit to Engineer for review an Application for Payment filled out and signed by Contractor covering the Work completed as of the date of the Application and accompanied by such supporting documentation as is required by the Contract Documents.

B. Beginning with the second Application for Payment, each Application shall include an affidavit of Contractor stating that all previous progress payments received on account of the Work have been applied on account to discharge Contractor's legitimate obligations associated with prior Applications for Payment.

C. If payment is requested on the basis of Equipment and Materials not incorporated in the Work but delivered and suitably stored at the Site or at another location agreed to in writing, the Application for Payment shall also be accompanied by a bill of sale, invoice, or other documentation warranting that Owner has received the Equipment and Materials free and clear of all liens, charges, security interests, and encumbrances (which are hereinafter in these General Conditions referred to as "Liens") and evidence that the Equipment and Materials are covered by appropriate property insurance and other arrangements to protect Owner's interest therein, all of which will be satisfactory to Owner.

D. The amount of retainage with respect to progress payments will be as stipulated in Paragraph 14.04G.

14.03 CONTRACTOR'S WARRANTY OF TITLE:

A. Contractor warrants and guarantees that title to all Work, Materials, and Equipment covered by any Application for Payment, whether incorporated in the Project or not, will pass to Owner no later than the time of payment free and clear of all Liens.

14.04 REVIEW OF APPLICATION FOR PROGRESS PAYMENT:

A. Engineer will, within seven days after receipt of each Application For Payment, either indicate in writing a recommendation of payment and present the Application

to Owner (subject to the provisions of the last sentence of Paragraph 14.04D), or return the Application to Contractor indicating in writing Engineer's reasons for refusing to recommend payment. In the latter case, Contractor may make the necessary corrections and resubmit the Application. After the required internal reviews and processing by the Owner, the Owner will diligently proceed to make payment to the Contractor, in accordance with the approved payment request, within 30 days. All efforts will be made to make payments within the 30 day period, but the Owner cannot guarantee the 30 days maximum time.

B. Engineer's recommendation of any payment requested in an Application for Payment will constitute a representation by Engineer to Owner, based on Engineer's on-Site observations of the Work in progress as experienced and qualified design professionals and on Engineer's review of the Application for Payment and the accompanying data and schedules that the Work has progressed to the point indicated; that, to the best of Engineer's knowledge, information, and belief, the quality of the Work is in accordance with the Contract Documents (subject to an evaluation of the Work as a functioning whole prior to or upon Substantial Completion, to the results of any subsequent tests called for in the Contract Documents, to a final determination of quantities and classifications for Unit Price Work under Paragraph 9.08, and to any other qualifications stated in the recommendation); and that Contractor is entitled to payment of the amount recommended. However, by recommending any such payment, Engineer will not thereby be deemed to have represented that exhaustive or continuous on-Site inspections have been made to check the quality or the quantity of the Work beyond the responsibilities specifically assigned to Engineer in the Contract Documents, or that there may not be other matters or issues between the parties that might entitle Contractor to be paid additionally by Owner or Owner to withhold payment to Contractor.

C. Engineer's recommendation of final payment will constitute an additional representation by Engineer to Owner that the conditions precedent to Contractor's being entitled to final payment as set forth in Paragraph 14.09 have been fulfilled.

D. Engineer may refuse to recommend the whole or any part of any payment if, in Engineer's opinion, it would be incorrect to make such representations to Owner. Engineer may also refuse to recommend any such payment, or, because of subsequently discovered evidence or the results of subsequent inspections or tests, nullify any such payment previously recommended, to such extent as may be necessary in Engineer's opinion to protect Owner from loss because:

1. The Work is defective, or completed Work has been damaged requiring correction or replacement.
2. Written claims have been made against Owner or Liens have been filed in connection with the Work.
3. The Contract Price has been reduced by Written Amendment or Change Order
4. Owner has been required to correct defective Work or complete Work in accordance with Paragraph 13.10,
5. Of Engineer's 'actual knowledge of the occurrence of any of the events enumerated in Paragraph 15.02B.
6. Of Contractor's unsatisfactory prosecution of the Work in accordance with the Contract Documents.

SECTION 00700 – GENERAL CONDITIONS (continued)

7. Contractor's failure to make payment to Subcontractors, or for labor, Materials, or Equipment, or
8. Engineer shall not certify payments requesting more than eighty (80) percent of the Contract amount until such time as all operation, maintenance, repair, and replacement manuals, and product data has been furnished by the Contractor to the Owner.

E. Owner may refuse to make payment of the full amount recommended by Engineer because claims have been made against Owner on account of Contractor's performance of furnishing of the Work, or Liens have been filed in connection with the Work, or there are other items entitling Owner to a set-off against the amount recommended, but Owner must give Contractor immediate written notice (with a copy to Engineer) stating the reasons for such action.

F. When all grounds for withholding payment are removed, payment will be made in the amounts withheld because of them.

G. Progress payments will be in the amount of 95% of the amount of the Work completed and 100% of Equipment and Materials suitably stored and documented as indicated on the Application for Payment less the sum of all previous payments. The owner may forego withholding retainage of the progress payments if the construction contract is fifty-percent (50%) complete and the contractor has provided the work in a satisfactory manner.

14.05 SUBSTANTIAL COMPLETION:

A. When Contractor considers the entire Work ready for its intended use, Contractor shall notify Owner and Engineer in writing that the entire Work is substantially complete (except for items specifically listed by Contractor as incomplete) and request that Engineer issue a certificate of Substantial Completion.

B. Within a reasonable time thereafter, Contractor, and Engineer shall make an inspection of the Work to determine the status of completion. If Engineer does not consider the Work substantially complete, Engineer will notify Contractor in writing giving his reasons therefor. If Engineer considers the Work substantially complete, Engineer will prepare and deliver to Owner a tentative certificate of Substantial Completion which will fix the Date of Substantial Completion. There shall be attached to the certificate a tentative list of items to be completed or corrected before final payment.

C. Owner shall have seven days after receipt of the tentative certificate during which to make written objection to Engineer as to any provisions of the certificate or attached list. If, after considering such objections, Engineer concludes that the Work is not substantially complete, Engineer will within fourteen days after submission of the tentative certificate to Owner notify Contractor in writing, stating the reasons therefor. If, after consideration of Owner's objections, Engineer considers the Work substantially complete, Engineer will within said fourteen days execute and deliver to Owner and Contractor a definitive certificate of Substantial Completion (with a revised tentative list of items to be completed or corrected) reflecting such changes from the tentative certificate as Engineer believes justified after consideration of any objections from Owner.

D. At the time of delivery of the tentative certificate of Substantial Completion, Engineer will deliver to Owner and Contractor a written recommendation as to

SECTION 00700 – GENERAL CONDITIONS (continued)

division of responsibilities pending final payment between Owner and Contractor with respect to security, operation, safety, maintenance, heat, utilities, insurance, and warranties.

E. Unless Owner and Contractor agree otherwise in writing and so inform Engineer prior to Engineer's issuing the definitive certificate of Substantial Completion, Engineer's aforesaid recommendation will be binding on Owner and Contractor until final payment.

F. Owner shall have the right to exclude Contractor from the Work after the Date of Substantial Completion, but Owner shall allow Contractor reasonable access to complete or correct items on the tentative list.

14.06 PARTIAL UTILIZATION:

A. Use by Owner of any finished part of the Work, which has specifically been identified in the Contract Documents, or which Owner, Engineer, and Contractor agree constitutes a separately functioning and useable part of the Work that can be used by Owner without significant interference with Contractor's performance of the remainder of the Work, may be accomplished prior to Substantial Completion of all the Work subject to the following:

1. Owner at any time may request Contractor in writing to permit Owner to use any such part of the Work which Owner believes to be ready for its intended use and substantially complete. If Contractor agrees, Contractor will certify to Owner and Engineer that said part of the Work is substantially complete and request Engineer to issue a certificate of Substantial Completion for that part of the Work. Contractor at any time may notify Owner and Engineer in writing that Contractor considers any such part of the Work ready for its intended use and substantially complete and request Engineer to issue a certificate of Substantial Completion for that part of the Work. Within a reasonable time after either such request, Owner, Contractor, and Engineer shall make an inspection of that part of the Work to determine its status of completion. If Engineer does not consider that part of the Work to be substantially complete, Engineer will notify Owner and Contractor in writing giving the reasons therefor. If Engineer considers that part of the Work to be substantially complete, the provisions of Paragraph 14.05 will apply with respect to certification of Substantial Completion of that part of the Work and the division of responsibility in respect thereof and access thereto.
2. Owner may at any time request Contractor in writing to permit Owner to take over operation of any such part of the Work although it is not substantially complete. A copy of such request will be sent to Engineer and within a reasonable time thereafter, Owner, Contractor, and Engineer shall make an inspection of that part of the Work to determine its status of completion and will prepare a list of the items remaining to be completed or corrected thereon before final payment. If Contractor does not object in writing to Owner and Engineer that such part of the Work is not ready for separate operation by Owner, Engineer will finalize the list of items to be completed or corrected and will deliver such list to Owner and Contractor together with a written recommendation as to the division of responsibilities pending final payment between Owner and Contractor with respect to security, operation, safety, maintenance, utilities, insurance, warranties, and guarantees for that

SECTION 00700 – GENERAL CONDITIONS (continued)

part of the Work, which will become binding upon Owner and Contractor at the time when Owner takes over such operation (unless they shall have otherwise agreed in writing and so informed Engineer). During such operation and prior to Substantial Completion of such part of the Work, Owner shall allow Contractor reasonable access to complete or correct items on said list and to complete other related Work.

3. No occupancy or separate operation of part of the Work will be accomplished prior to compliance with the requirements of Paragraph 5.02I in respect of property insurance.

14.07 FINAL INSPECTION:

A. Upon written notice from Contractor that the Work or an agreed portion thereof is complete, Engineer will make a final inspection with Owner, Engineer, and Contractor and will notify Contractor in writing of all particulars in which this inspection reveals that the Work is incomplete or defective. Contractor shall immediately take such measures as are necessary to remedy such deficiencies.

14.08 FINAL APPLICATION FOR PAYMENT:

A. After Contractor has completed all such corrections to the satisfaction of Engineer and delivered all maintenance and operating instructions, schedules, guarantees, Bonds, certificates of inspection, marked-up record documents, and other documents - all as required by the Contract Documents, and after Engineer has indicated that the Work is acceptable (subject to the provisions of Paragraph 14.11), Contractor may make application for final payment following the procedure for progress payments.

B. The final Application for Payment shall be accompanied by all documentation called for in the Contract Documents, together with complete and legally effective releases or waivers (satisfactory to Owner) of all Liens arising out of or filed in connection with the Work. In lieu thereof and as approved by Owner, Contractor may furnish receipts or releases in full; an affidavit of Contractor that the releases and receipts include all labor, services, Material, and Equipment for which a Lien could be filed, and that all payrolls, Equipment and Material bills, and other indebtedness connected with the Work for which Owner or Owner's property might in any way be responsible, have been paid or otherwise satisfied; and consent of the surety, if any, to final payment.

14.09 FINAL PAYMENT AND ACCEPTANCE:

A. If, on the basis of Engineer's observation of the Work during construction and final inspection, and Engineer's review of the final Application for Payment and accompanying documentation -- all as required by the Contract Documents, Engineer is satisfied that the Work has been completed and Contractor's other obligations under the Contract Documents have been fulfilled, Engineer will, within fourteen days after receipt of the final Application for Payment, indicate in writing Engineer's recommendation of payment and present the Application to Owner for payment. Thereupon, Engineer will give written notice to Owner and Contractor that the Work is acceptable (subject to the provisions of Paragraph 14.11). Otherwise, Engineer will return the Application to Contractor, indicating in writing the reasons for

SECTION 00700 – GENERAL CONDITIONS (continued)

refusing to recommend final payment, in which case Contractor shall make the necessary corrections and resubmit the Application. Thirty days after presentation to Owner of the Application and accompanying documentation, in appropriate form and substance, and with Engineer's recommendation and notice of acceptability, the amount recommended by Engineer will become due and will be paid by Owner to Contractor.

B. If, through no fault of Contractor, final completion of the Work is significantly delayed and if Engineer so confirms, Owner shall, upon receipt of Contractor's final Application for Payment and recommendation of Engineer, and without terminating the Agreement, make payment of the balance due for that portion of the Work fully completed and accepted. The written consent of the surety to the payment of the balance due for that portion of the Work fully completed and accepted shall be submitted by Contractor to Engineer with the Application for such payment. Such payment shall be made under the terms and conditions governing final payment, except that it shall not constitute a waiver of claims.

C. The Final Pay Estimate will include all sums remaining to be paid.

14.10 CONTRACTOR'S CONTINUING OBLIGATION:

A. Contractor's obligation to perform and complete the Work in accordance with the Contract Documents shall be absolute. Neither recommendation of any progress or final payment by Engineer, nor the issuance of a certificate of Substantial Completion, nor any payment by Owner to Contractor under the Contract Documents, nor any use or occupancy of the Work or any part thereof by Owner, nor any act of acceptance by Owner nor any failure to do so, nor any review and approval of a Submittal, nor the issuance of a notice of acceptability by Engineer pursuant to Paragraph 14.09, nor any correction of defective Work by Owner will constitute an acceptance of Work not in accordance with the Contract Documents or a release of Contractor's obligation to perform the Work in accordance with the Contract Documents (except as provided in Paragraph 14.11).

14.11 WAIVER OF CLAIMS: The making and acceptance of final payment will constitute:

A. A waiver of all claims by Owner against Contractor, except claims arising from unsettled Liens, from defective work appearing after final inspection pursuant to Paragraph 14.07, or from failure to comply with the Contract Documents or the terms of any special guarantees specified therein; however, it will not constitute a waiver by Owner of any rights in respect of Contractor's continuing obligations under the Contract Documents; and

B. A waiver of all claims by Contractor against Owner other than those previously made in writing and still unsettled.

14.12 INTEREST: NOT APPLICABLE.

ARTICLE 15 - SUSPENSION OF WORK AND TERMINATION

15.01 OWNER MAY SUSPEND WORK:

A. Owner may, at any time and without cause, suspend the Work or any portion thereof for a period of not more than 90 days by notice in writing to Contractor, and Engineer

SECTION 00700 – GENERAL CONDITIONS (continued)

which will fix the date on which Work will be resumed. Contractor shall resume the Work on the date so fixed. Contractor shall be allowed an increase in the Contract Price or an extension of the Contract Times, or both, directly attributable to any suspension if Contractor makes an approved claim therefor as provided in Articles 11 and 12.

15.02 OWNER MAY TERMINATE:

A. Upon the occurrence of any one or more of the following events:
1. If Contractor commences a voluntary case under any chapter of the Bankruptcy Code (Title 11, United States Code), as now or hereafter in effect, or if Contractor takes any equivalent or similar action by filing a petition or otherwise under any other federal or state Law in effect at such time relating to the bankruptcy or insolvency;
2. If a petition is filed against Contractor under any chapter of the bankruptcy Code as now or hereafter in effect at the time of filing, or if a petition is filed seeking any such equivalent or similar relief against Contractor under any other federal or state Law in effect at the time relating to bankruptcy or insolvency;
3. If Contractor makes a general assignment for the benefit of creditors;
4. If a trustee, receiver, custodian, or agent of Contractor is appointed under applicable Law or under contract, whose appointment or authority to take charge of property of Contractor is for the purpose of enforcing a Lien against such property or for the purpose of general administration of such property for the benefit of Contractor's creditors;
5. If Contractor admits in writing an inability to pay its debts generally as they become due;
6. If Contractor persistently fails to perform the Work in accordance with the Contract Documents (including, but not limited to, failure to supply sufficient skilled workers or suitable Equipment or Materials or failure to adhere to the progress schedule established under Paragraph 2.07 as revised from time to time);
7. If Contractor disregards Laws or Regulations of any public body having jurisdiction;
8. If Contractor disregards the authority of Engineer; or
9. If Contractor otherwise violates in any substantial way any provisions of the Contract Documents;

B. Owner may, after giving Contractor (and the surety, if there be one) ten days' written notice and to the extent permitted by Laws and Regulations, terminate the services of Contractor, exclude Contractor from the Site and take possession of the Work and of all Contractor's tools, appliances, construction equipment, and machinery at the Site and use the same to the full extent they could be used by Contractor (without liability to Contractor for trespass or conversion), incorporate in the Work all Equipment and Materials stored at the Site or for which Owner has paid Contractor but which are stored elsewhere, and finish the Work as Owner may deem expedient. In such case, Contractor shall not be entitled to receive any further payment until the Work is finished. If the unpaid balance of the Contract Price exceeds the direct, indirect, and consequential costs of completing the Work (including but not limited to fees and charges of engineers, architects, attorneys and other professionals, and court and

arbitration costs), such excess will be paid to Contractor. If such costs exceed such unpaid balance, Contractor shall pay the difference to Owner. Such costs incurred by Owner will be approved as to reasonableness by Engineer and incorporated in a Change Order, but when exercising any rights or remedies under this Paragraph, Owner shall not be required to obtain the lowest price for the Work performed.

C. Where Contractor's services have been so terminated by Owner, the termination will not affect any rights or remedies of Owner against Contractor then existing or which may thereafter accrue. Any retention or payment of moneys due to Contractor by Owner will not release Contractor from liability.

D. Upon ten days' written notice to Contractor and Engineer, Owner may, without cause and without prejudice to any other right or remedy, elect to abandon the Work and terminate the Agreement. In such case, Contractor shall be paid for all Work executed and any expense sustained plus reasonable termination expenses, which will include, but not be limited to, direct, indirect, and consequential costs (including, but not limited to, fees and charges of engineers, architects, attorneys and other professionals, and court and arbitration costs).

15.03 CONTRACTOR MAY STOP WORK OR TERMINATE:

A. If, through no act or fault of Contractor, the Work is suspended for a period of more than 90 days by Owner or under an order of court or other public authority, or Engineer fails to act on any Application for Payment within 30 days after it is submitted, or Owner fails for 30 days to pay Contractor any sum finally determined to be due, then Contractor may, upon ten days' written notice to Owner and Engineer, terminate the Agreement and recover from Owner payment for all Work executed and any expense sustained plus reasonable termination expenses. In addition and in lieu of terminating the Agreement, if Engineer has failed to act on an Application for Payment or Owner has failed to make any payment as aforesaid, Contractor may upon ten days' written notice to Owner and Engineer stop the Work until payment of all amounts then due. The provisions of this Paragraph shall not relieve Contractor of the obligations under Paragraph 6.15 to carry on the Work in accordance with the progress schedule and without delay during disputes and disagreements with Owner.

ARTICLE 16 - RESOLUTION OF DISPUTES

16.01 RESOLUTION OF CLAIMS AND DISPUTES

A. Contractor's claims against Owner will be reviewed by Engineer, who shall take one or more of the following actions within ten (10) days after receipt of a claim:
   1. Request additional supporting data from the claimant;
   2. Submit a schedule to Contractor indicating reasonable time within which Engineer expects to take action;
   3. Reject the Claim in whole or in part, stating reasons for rejection;
   4. Recommend approval of the claim; or
   5. Suggest a compromise.

SECTION 00700 – GENERAL CONDITIONS (continued)

B. Owner's claims against Contractor will be reviewed by Contractor who shall take one or more of the following actions within ten (10) days after receipt of the Claim:
   1. Request additional supporting data from Engineer;
   2. Submit a schedule to the Engineer indicating a reasonable time within which Contractor expects to take action;
   3. Deny the claim in whole or in part, stating reasons for denial;
   4. Recommend approval of the claim; or
   5. Suggest a compromise.

C. If a claim has been resolved, the Owner will prepare or obtain appropriate documentation.

D. If a claim has been denied or if no action has been taken in the manner provided in Paragraphs 16.01A or 16.01B, then the claimant, within ten (10) days thereafter, may notify the Owner, the other party, and Contractor's surety that Engineer and Contractor have been unable to resolve the claim. In that event, the Owner, pursuant to Paragraph 16.01E shall review the claim and make a decision on the claim.

E. If a claim is presented to the Owner, then the Owner shall review the claim and make a decision within fourteen (14) days.

F. Disputes that cannot be settled through negotiation or the procedures in Paragraphs 16.01A through 16.01E above, shall be settled as mutually agreed or in a court of competent jurisdiction within the State of Arkansas.

G. Arbitration shall not be used in the settlement of disputes.

ARTICLE 17 - MISCELLANEOUS

17.01 GIVING NOTICE:

A. Whenever any provision of the Contract Documents requires the giving of written notice, it will be deemed to have been validly given if delivered in person to the individual or to a member of the firm or to an officer of the corporation for whom it is intended, or if delivered at or sent by registered or certified mail, postage prepaid, to the last business address known to the giver of the notice.

17.02 COMPUTATION OF TIME:

A. When any period of time is referred to in the Contract Documents by days, it will be computed to exclude the first and include the last day of such period. If the last day of any such period falls on a Saturday or Sunday or on a day made a legal holiday by the Law of the applicable jurisdiction, such day will be omitted from the computation.

B. A calendar day of 24 hours measured from midnight to the next midnight shall constitute a day.

17.03 CLAIMS, CUMULATIVE REMEDIES:

A. Should Owner or Contractor suffer injury or damage to person or property because of any error, omission, or act of the other party or of any of the other party's employees or agents or others for whose acts the other party is legally liable, claim will be made in writing to the other party within a reasonable time of the first observance of such injury or damage. The provisions of this Paragraph shall not be construed as a

SECTION 00700 – GENERAL CONDITIONS (continued)

substitute for or a waiver of the provisions of any applicable statute of limitations or repose.

B. The duties and obligations imposed by these General Conditions and the rights and remedies available hereunder to the parties hereto, and, in particular but without limitation, the warranties, guarantees and obligations imposed upon Contractor by Paragraphs 6.16A, 13.01, 13.08, 13.10, 14.03, and 15.02A and all of the rights and remedies available to Owner and Engineer thereunder, are in addition to, and are not to be construed in any way as a limitation of, any rights and remedies available to any or all of them which are otherwise imposed or available by Laws or Regulations, by special warranty or guarantee, or by other provisions of the Contract Documents, and the provisions of this Paragraph will be as effective as if repeated specifically in the Contract Documents in connection with each particular duty, obligation, right, and remedy to which they apply. All representations, warranties, and guarantees made in the Contract Documents will survive final payment and termination or completion of the Agreement.

17.04 FREEDOM OF INFORMATION ACT:

A. City contracts and documents prepared while performing City contractual work are subject to the Arkansas Freedom of Information Act. If a Freedom of Information Act request is presented to the City of Fayetteville, the contactor shall do everything possible to provide the documents in a prompt and timely manner as prescribed in the Arkansas Freedom of Information Act (A.C.A. §25-19-101 et. seq.) Only legally authorized photocopying costs pursuant to the FOIA may be assessed for this compliance.

END OF SECTION 00700

SECTION 00700 – GENERAL CONDITIONS (continued)

THIS PAGE INTENTIONALLY LEFT BLANK

SECTION 00800 – SUPPLEMENTAL CONDITONS

GENERAL

1.01 SUMMARY:

A. This Section summarizes Supplemental Conditions that apply to this Work in addition (supplemental to) to General Conditions, Contract Documents and other Specifications for Noland Wastewater Treatment Plant Switchgear Replacement, Bid 26-30, Construction – Noland WWTF Switchgear.

1.02 ARKANSAS STATE LAW A.C.A. § 22-9-101

A. Comply with all Federal, State and Local laws and regulations including but not limited to Arkansas Code § 22-9-101 .

1. Title 22 Public Property

Chapter 9 Public Works

Subchapter 1 -- General Provisions

A.C.A. § 22-9-101. Observation by registered professionals required.

Universal Citation: AR Code § 22-9-101 (2016)

" (a) The state or a township, county, municipality, village, or other political subdivision of the state shall not engage in the capital improvement of public works involving engineering or architecture for which the plans, specifications, and estimates have not been made by and the capital improvement executed under the observation of a professional engineer as defined in § 17-30-101 or architect as defined in § 17-15-102, in their respective areas of expertise.

(b) Nothing in this section shall be held to apply to any public works wherein the contemplated capital improvement expenditure:

(1) For an engineering project does not exceed twenty-five thousand dollars ($25,000); or

(2) For an architectural project does not exceed one hundred thousand dollars ($100,000).

(c) This section shall not apply to any school district, county, municipality, or township project that is planned and executed according to plans and specifications furnished by authorized state agencies."

1.03 PROPERTY LINES AND MONUMENTS:

A. The Contractor shall protect all property corner markers, and when any such marker or monuments are in danger of being disturbed, they shall be properly referenced and if disturbed shall be reset at the expense of the Contractor.

1.04 EXPLOSIVES:

A. Explosives or burning shall not be used.

SECTION 00800 – SUPPLEMENTAL CONDITONS (continued)

1.05 CLEANUP:

A. During construction of the work, the Contractor shall at all times, keep the site of the work and adjacent premises as free from material, debris, and rubbish, as is practicable, shall remove same from any portion of the site, if in the opinion of the City of Fayetteville such material debris, or rubbish constitutes a nuisance or is objectionable.

B. The Contractor shall remove from the site all of his surplus materials and temporary structures when no further need therefore develops.

1.06 PROJECT MAINTENANCE:

A. The Contractor shall maintain and keep in good repair the work contemplated under these plans, specifications, drawings, etc., and shall perform for a period as set forth in the Maintenance Bond from the date of acceptance all necessary repair, reconstruction and renewal of any part of said construction and shall furnish the labor and materials to make good and to repair any defective condition growing out of or on the account of the breakage or failure of any substance or the improper function of same. Said maintenance contemplates the complete restoration to a functional use during the said period as set forth in the Maintenance Bond.

1.07 PROTECTION OF IMPROVEMENTS:

A. The Contractor shall be entirely responsible for the protection of all improvements that are not designated by the City of Fayetteville to be removed for proper construction of the project. This shall include sidewalks, building walls, existing inlets and manholes, underground utilities, shrubs, trees, signs, sod and fences. The Contractor shall be entirely responsible for the protection of all pavements adjacent to the project.

1.08 ACCIDENT REPORTING:

A. The Contractor must report in writing to the City of Fayetteville all accidents whatsoever arising out of, or in connections with the performance of the work, whether on, or adjacent to, the site, which caused death, personal injury, or property damages, giving full details and statements of witnesses. In addition, if death or serious injuries or serious damages are caused, the accident shall be reported immediately by telephone or messenger to the City of Fayetteville.

B. If any claim is made by anyone against the Contractor or any subcontractor on account of any accident, the Contractor shall promptly report the facts in writing to the City of Fayetteville giving full details of the claim.

SECTION 00800 – SUPPLEMENTAL CONDITONS (continued)

1.09 ARRANGEMENTS FOR WATER

A. Water used for installation purposes, jetting or flooding trenches, sprinkling, testing and flushing of pipelines or any other purpose incidental to this project, will be furnished by the Contractor. The Contractor shall make the necessary arrangements for securing the transporting of such water and shall take such water in a manner and at such time that will not produce a harmful drain or decrease of pressure in the City of Fayetteville's WATER SYSTEM. Water shall not be used in a wasteful manner.

B. The Contractor shall be billed and shall pay for all water used.

C. Backflow prevention is required on Contractor's equipment during filling operations.

1.10 USE OF FIRE HYDRANTS

A. No person shall open, turn off, interfere with, attach any pipe or hose to, or connect anything with any fire hydrant, stop valve or stop cock, or tap any water main belonging to the City of Fayetteville, unless duly authorized to do so by the City of Fayetteville Water Department.

B. Water utilized from fire hydrants shall be in a manner pre-approved and acceptable to the City of Fayetteville. Such use shall include metering and backflow prevention equipment acceptable to the City of Fayetteville. The Contractor is responsible for any adverse impact on the water distribution system including but not limited to damage to the system from water hammer and transient forces resulting from his filling operations.

C. The Contractor shall be billed and shall pay for all water used.

D. Backflow prevention is required on Contractor's equipment during filling operations.

1.11 NO TREES SHALL BE CUT.

A. No tress shall be cut except upon the specific authority by the City of Fayetteville. Trees adjacent to the work shall be protected from all damage by the construction operations.

1.12 REMOVAL OF TREES, FENCES, ETC.

A. Fences within the right-of-way of this project shall be kept in good repair and closed at all times, except when it is necessary to move machinery and equipment through the fence. Gates shall be closed immediately after use. When the project is complete, the Contractor shall repair all fences and gates that have been moved or damaged by the Contractor as a result of construction. Fences shall be left in repair equal to the original condition. No separate compensation shall be made for this work.

B. Where surface drainage channels are disturbed or blocked during construction, they shall be restored to their original condition of grade and cross section after the work of construction is completed.

SECTION 00800 – SUPPLEMENTAL CONDITONS (continued)

C. The Contractor shall not be held liable for unavoidable damage to crops provided such damage occurs within the construction easement provided by the City of Fayetteville.

1.13 POLES, SIGNS, GUY WIRES, ETC

A. All utility poles and guy wires, private sign posts, signs and guy wires, and similar private obstructions which interfere with the construction of this project will be removed and replaced, or moved to new permanent locations by the Owners thereof without cost to the Contractor.

B. The removal and replacement of City of Fayetteville street sign posts and signs are the responsibility of the Contractor. The Contractor shall be responsible for all damage to street signposts and signs within the limits of his operations that remain in place or are removed and replaced. In the event street sign posts and signs are injured or destroyed by the Contractor's operations, they shall be replaced by the Contractor. No separate compensation will be paid for this work, but the costs thereof shall be included in such contract pay items as are provided.

1.14 EXISTING UTILITIES AND SERVICE LINES:

A. Prior to the start of any excavation by the Contractor, the Contractor shall communicate with ARKANSAS ONE CALL, the proper representative of all the utility systems included but not limited to the water and sewer department, the gas company, electric company, telephone company and any other private utility companies and advise said representative of the route of the proposed construction, in order to obtain the assistance of the utility in the location of and in the avoidance of conflicting with utility lines.

B. The Contractor shall be responsible for the protection of all existing utilities or service lines crossed or exposed by his construction operations. Where existing utilities or service lines are cut, broken, or damaged, the Contractor shall replace or repair the utilities or service lines with the same type of original material and construction, or better, at his own cost and expense, with the exception of those items included in the bid schedule.

C. The Contractor shall comply with the "Arkansas Underground Facilities Damage Prevention Act" including latest amendments, the Arkansas One-Call System, and shall alert potentially conflicting utility systems accordingly.

D. The Contractor is responsible for protecting public and private property. The Contractor is responsible for the Contractor's safety plan and implementation.

SECTION 00800 – SUPPLEMENTAL CONDITONS (continued)

1.15 EXISTING STRUCTURES:

A. It is the Contractor's responsibility to verify the locations of existing surface and subsurface structures. It is mutually agreed that such shall not be considered sufficient basis for claims for additional compensation for extra work or for increasing the pay quantities in any manner whatsoever, unless the obstruction encountered is such as to necessitate changes in the lines or grades, or requires the building of special work, provisions for which are not made in the plans and proposal, in which case the provisions in these specifications for extra work shall apply.

1.16 DRAINAGE:

A. The Contractor shall provide at his own cost and expense all methods for adequately draining the work. No separate measurement or compensation will be paid for sub-drains or other methods of draining, but the cost thereof shall be included in such contract pay items as are provided in the Proposal and Contract.

1.17 CONSTRUCTION IN CITY STREETS AND PRIVATE DRIVES:

A. It shall be the responsibility of the Contractor to build and maintain all weather bypasses and detours, if necessary, and to properly light, barricade, and mark all bypasses and detours that might be required on and across the streets involved in the work included in this contract.

B. Street shall remain open to traffic at all times unless special permission for closing the street is given by the City of Fayetteville. After permission is given for closing any portion of the street, the Contractor shall be responsible for notifying the Police and Fire Department 24 (24) hours in advance of such closing.

C. The Contractor shall make every effort to complete construction and allow immediate access to adjacent property at all driveway entrances located along the streets. Owners or tenants or improvements where access and/or entrance drives are located shall be notified at least eight (8) hours prior to the time the construction will be started at their driveways or entrances and informed as to the length of time driveways will be closed.

D. During wet weather the Contractor shall construct temporary gravel crossings and wooden walkways to allow ingress and egress across excavated areas at no expense to the City of Fayetteville and as directed by the City of Fayetteville.

E. The Contractor shall at all times, keep a sufficient width of the roadway clear of dirt and other materials to allow the free flow of traffic. The Contactor shall assume any and all responsibility for damage, person or otherwise, that may be caused by the construction along City of Fayetteville streets or private drives.

F. If it becomes apparent that barricades do not sufficiently protect the general public and the Contractor's workmen from traffic hazards, the Contractor may be required to furnish such flagmen and/or watchmen as may be deemed necessary to properly direct traffic.

SECTION 00800 – SUPPLEMENTAL CONDITONS (continued)

1.18 CONSTRUCTION IN ARKANSAS HIGHWAY DEPARTMENT RIGHT-OF-WAY:

A. Where the work encroaches upon any right-of-way of the Arkansas Highway Department, the City of Fayetteville will secure the necessary permits for the work. Where highways are crossed, the Contractor shall observe all the regulations and instructions of the Arkansas Highway Department as to methods of doing the work, or precautions for safety of property and the public. All negotiations with the Arkansas Highway Department except for permits shall be made by the Contractor. The Arkansas Highway Department shall be notified by the Contractor not less than five days previous to the time of his intention to begin work.

1.19 MAINTENANCE OF STORM SEWER AND UTILITIES THAT CROSS EXISTING ROADWAY:

A. The Contractor shall maintain at all times during construction storm sewer and utility crossings of existing roadways at no expense to the City of Fayetteville. Storm sewers and utilities crossing existing roadways shall be back-filled in accordance with the provisions of these specifications to an elevation six inches below the elevation of the existing roadway. A six-inch thick compacted gravel base shall be constructed to the elevation of the existing pavement within the limits shall be maintained throughout the construction. Potholes appearing in the existing pavement, which in the opinion of the City of Fayetteville is a hazard to the general public, shall be filled and maintained as directed by the City of Fayetteville.

1.20 BARRICADES, LIGHTS AND WATCHMEN:

A. Where the work is carried on in or adjacent to any street, alley or public place, the Contractor shall at his own cost and expense furnish and erect such barricades, fences, battery type flasher-markers and danger signals, shall provide such watchmen, and shall provide such other precautionary measures including but not limited to flagmen and detours for the protection of persons or property and of the work as are necessary. All signs, barricades, and traffic control devices shall be placed and maintained in accordance with the MANUAL FOR UNIFORM TRAFFIC CONTROL DEVICES (MUTCD), latest edition.

B. From sunset to sunrise, the Contractor shall furnish and maintain at least one battery type flasher-marker at each barricade and sufficient number of barricades shall be erected to keep vehicles from being driven on or into any work under construction. The Contractor shall furnish watchmen in sufficient numbers to protect the work.

C. The Contractor will be held responsible for all damage to the work due to failure of barricades, signs, lights, and watchmen to protect it, and whenever evidence is found of such damage, the City of Fayetteville may order the damaged portion immediately removed and replaced by the Contractor at his cost and expense. The Contractor's responsibility for the maintenance of barricades, signs, and lights, and for providing watchmen shall not cease until the project shall have been accepted by the City of Fayetteville.

SECTION 00800 – SUPPLEMENTAL CONDITONS (continued)

D. During the prosecution of the work, the Contractor shall obstruct public travel as little as possible and in no case shall there be less than twelve (12) feet in width of unobstructed roadway for the use of traffic. Materials and equipment stored in or near the path of traffic shall be protected with red flags during the day and with lights during the night.

1.21 PROTECTION OF EXISTING WATER VALVE BOXES

A. Protection of existing water valve boxes located within the limits of the work shall subsequently be the responsibility of the Contractor. Failure to show water valve box locations on the plans does not relieve the Contractor of the responsibility to prevent damage to the valve and boxes.

1.22 SURPLUS MATERIALS

A. Surplus materials shall be disposed of by the Contractor at his own cost and expense in compliance with all Federal, State and Local regulations.

1.23 SALVAGED MATERIALS

A. All materials removed during the construction of the project as salvaged materials shall be removed, cleaned, hauled to and stacked on the City of Fayetteville's grounds. Salvaged materials shall be the property of the City of Fayetteville.

1.24 FINAL CLEAN-UP

A. Upon completion of the work and before acceptance and final payment, the Contractor shall clean, remove rubbish, unused materials and temporary structures from the limits of the project and restore in a manner acceptable to the Engineer, all property, both public and private, that has been damaged by the Contractor during the prosecution of the work, and shall level and grade all portions of the work where the surface of the natural ground or street surface has been disturbed during construction and shall leave the site of the work in a neat and presentable condition, free from ruts or holes.

B. Material cleared from the limits of the project and deposited on adjacent property will not be considered satisfactory unless prior approval is obtained from the property owner involved, the work is accomplished to the satisfaction of the City of Fayetteville, and a proper City of Fayetteville grading permit is issued, if required.

1.25 PRIVATE PROPERTY ACCESS

A. The Contractor shall not enter upon or use private property except as allowed by easements or if the Contractor obtains specific written prior permission from the property owner.

SECTION 00800 – SUPPLEMENTAL CONDITONS (continued)

1.26 COMPANY LOGO

A. All equipment used on the project shall be clearly marked with the Contractor's name and LOGO. Subcontractor equipment shall also be similarly marked.

1.27 TRENCH SAFETY SYSTEM - CONTRACTOR

A. Should excavation by the contractor become necessary then the Contractor shall comply with Specification 02003 - TRENCH SAFETY/PROTECTIVE SYSTEMS.

PART 2 - PRODUCTS – NOT APPLICABLE.

PART 3 - EXECUTION – NOT APPLICABLE.

END OF SECTION 00800

SECTION 01110-SUMMARY OF WORK

PART 1 - GENERAL

1.01 SUMMARY:

A. This Section summarizes the Work and supplements the information detail in the complete Contract Documents.

B. Owner: The City of Fayetteville, Arkansas, 113 West Mountain Street, Fayetteville, AR 72701 is contracting for Work described in the Contract Documents.

1. Contract Identification:

Noland Wastewater Treatment Plant

Switchgear Replacement

Bid 26-30, Construction – Noland WWTF Switchgear

2. Location: 1500 North Fox Hunter Road, Fayetteville, Arkansas 72701.

C. Engineer: The Contract Documents were prepared by:

1. Hawkins-Weir Engineers, Inc.
516 East Milsap Road, Suite 103
Fayetteville, Arkansas 72703

1.02 PROJECT DESCRIPTION:

A. Construction of a masonry Electrical Building to house medium voltage switchgear and associated control equipment.

B. Offloading and installation of pre-purchased medium voltage switchgear and associated control equipment.

C. Modification of existing electrical service and connections to existing plant distribution system.

1.03 WORK BY OTHERS:

A. Work Under Other Contracts: None.

B. Work by Owner: None.

C. Other Activities: None.

1.04 CONTRACTOR'S USE OF PREMISES:

A. During the construction period, Contractor shall have use of the property, easements and rights-of-way acquired by the Owner for this project. All additional lands and access thereto required for temporary construction facilities or storage of materials and equipment are to be provided by Contractor.

SECTION 01110-SUMMARY OF WORK (continued)

1.05 OWNER'S USE OF PREMISES:

A. Partial Owner Occupancy: The Owner reserves the right to occupy completed areas of the contract, prior to Substantial Completion provided that such occupancy does not interfere with completion of the Work. Such partial occupancy shall not constitute acceptance of the total Work.

1.06 WORKING HOURS

A. Unless otherwise approved by the Owner, normal working hours for this project are Monday through Friday, 8:00 a.m. to 5:00 p.m. Written requests for Owner's approval to conduct work outside of normal working hours shall be submitted to the Engineer and shall allow ample time for the Engineer to arrange for inspection of the Work in progress. Unless otherwise specifically detailed in the Specifications or on the Drawings, work outside of normal working hours shall be for the Contractor's convenience, and the Contractor shall pay all expenses (at Engineer's standard rates) associated with extra inspection required for Work outside regular hours. The Contractor shall light the different parts of the Project as required to comply with all applicable federal and state regulations and with all applicable requirements of the Owner. The Contractor may conduct preparatory work, staging of pipe or other materials, and site cleanup outside of normal working hours or on weekends provided that the work is not near private residences.

1.07 WORK SEQUENCE:

A. Construction sequence shall be determined by Contractor subject to Owner's need for continuous operation of existing facilities, and subject to the requirements as indicated or specified. The Contractor's construction sequence should minimally adhere to the following outline:

1. Construction of the Electrical Building

2. Offloading and installation of the medium voltage switchgear

    a. The medium voltage switchgear is scheduled to be delivered to the project site in November 2026

3. Integration of medium voltage switchgear into the existing electrical distribution system.

4. Demolition of decommissioned electrical service equipment.

B. The Contractor shall arrange crews in a way to have continuous work from the time a particular project has begun until it is complete. It shall be the responsibility of the Contractor to inform the City of Fayetteville regarding dates and locations of work activities that may impact the flow of traffic.

C. Construction sequence shall be determined by Contractor subject to Owner's need for continuous operation of existing facilities, and subject to the requirements as indicated or specified.

D. It shall be the responsibility of the Contractor, 48 hours prior to the initiation of construction on easements through private property, to inform the property owner of his intent to begin construction. Before beginning construction in areas of public

SECTION 01110-SUMMARY OF WORK (continued)

dedication, the Contractor shall inform the agency having jurisdiction in the area forty-eight (48) hours prior to initiation of the work.

E. Continuous Service of Existing Facilities: Exercise caution and schedule operations to ensure that functioning of present facilities will not be disrupted. Shutdown of Owner's operating facilities to perform the Work shall be held to a minimum length of time and shall be coordinated with Owner who shall have control over the timing and schedules of such shutdowns.

1.08 PREORDERED EQUIPMENT AND MATERIALS:

A. The Owner has pre-purchased the medium voltage switchgear from Cat Switchgear Americas LLC. The pre-purchased equipment package consists of a six (6) section set of 12.47 kV medium voltage utility/generator paralleling switchgear, a control cabinet, and a uninterruptible power supply. The equipment is being supplied under Cat Project No. 41659 and is scheduled to be delivered in November 2026. The Contractor is responsible for offloading and installation of the equipment and shall have the proposed building weathertight by the time the equipment arrives. Should the building not be ready to house the equipment and protect it from the weather, the Contractor shall provide secure, weathertight storage until the building is ready. Should delivery of the equipment be delayed by the supplier beyond November 15th, the Contractor shall be entitled to additional Contract Time for the time between November 15th and the date of delivery.

1.09 PROJECT STATUS UPDATES

A. Contractor shall provide weekly updates to City staff throughout the duration of the project following the Notice to Proceed. Each update shall include all reports, photographs, schedules, and any other documentation as may be requested or specified by the City. The Contractor shall submit such updates in the format and manner directed by the City and within the deadlines established by City staff.

1.10 MEASUREMENT AND PAYMENT:

A. Unit Price Contracts: All Work indicated in the Contract Documents shall be included in the Unit Price Bid Schedule and the Agreement. A Unit Price is an amount proposed by Contractor and stated in the Agreement as a price per unit of measurement for materials or services.

B. Payment for the work included in this section will be in accordance with the prices set forth in the proposal for the quantity of work performed. The Contractor agrees that he will make no claim for damages, or anticipated profits, or otherwise on account of any difference between the amounts of work actually performed and the estimated amounts therefore.

C. Measurement and Payment of specific items will be as specified in each applicable Section of the Technical Specifications.

D. There will be no separate pay items for the following miscellaneous construction items. Cost for these items shall be considered incidental/subsidiary to other contract bid items.

1. All Safety excluding Trench Safety. Trench Safety per specification 02003 is a Bid item.

SECTION 01110-SUMMARY OF WORK (continued)

2. Photographs of the site prior to the Work if requested by City of Fayetteville.

3. Pipeline cleaning and root removal.

4. Maintenance of Traffic.

5. Final Cleanup.

6. All other labor, equipment, materials, incidentals, tools, appurtenances, permits and not specifically listed in the Bid Form work required for a complete installation acceptable to the City of Fayetteville Trash and Recycling.

E. The Contractor's Invoice and all supporting documents shall be submitted to Engineer for review prior to be submitted to the City of Fayetteville. The Engineer will prepare the pay estimate based on the Contractor's Invoice.

F. Invoices shall be sent to the Engineer for review. They shall be itemized to include:

G. The specific bid items utilized.

1. The quantities of those bid items.

2. The location of the project.

3. The total cost for that project.

4. The total billing to date, including any change orders.

5. All state and local taxes applicable.

H. Completion of a project is defined to include the satisfactory performance of all minor and non-pay work items such as clean up and restoration/replacement of all damaged private and public property.

1.11 COPIES OF DOCUMENTS:

A. Furnished Copies: After execution of Agreement, Contractor will be furnished at no cost, a maximum of three (3) sets of Contract Documents consisting of the Project Manual, in addition to those used in execution of the Agreement.

B. Additional Copies: Additional copies of above documents will be supplied by Engineer upon request of Contractor and approval of Owner.

C. PDF copies of above documents will be supplied by Engineer upon request of Contractor and approval of Owner.

1.12 SCHEDULE OF OWNER-SUPPLIED EQUIPMENT AND MATERIALS:

A. The City of Fayetteville will supply the pre-purchased medium voltage switchgear and associated controls.

SECTION 01110-SUMMARY OF WORK (continued)

PART 2 – PRODUCTS - Not Applicable

PART 3 – EXECUTION - Not Applicable

END OF SECTION 01110

SECTION 01110-SUMMARY OF WORK (continued)

THIS PAGE INTENTIONALLY LEFT BLANK

SECTION 01250-CONTRACT MODIFICATION PROCEDURES

PART 1 - GENERAL

1.01 SUMMARY

A. Section Includes:

1. Minor changes in the Work.
2. Proposal request.
3. Work Change Directive.

B. Related Sections:

1. DOCUMENT 00700 – GENERAL CONDITIONS.
2. Supplementary Conditions.

1.02 MINOR CHANGES IN THE WORK

A. Engineer will advise Contractor of minor changes in Work not involving an adjustment to Contract Price or Contract Times as authorized by the DOCUMENT 00700 – GENERAL CONDITIONS, Subparagraph 9.05 by issuing Field Orders.

1. There shall be no changes without prior written approval of the Engineer of Record and/or the City's designated Professional Engineer.

1.03 PROPOSAL REQUEST

A. Owner-Initiated Proposal Requests:

1. Engineer may issue a Proposal Request, including detailed descriptions of proposed changes in the Work that may require adjustment to the Contract Price or the Contract Time.
   a. If necessary, the description will include supplemental or revised Drawings and Specifications.
   b. Proposal Requests issued by Engineer are for information only. Do not consider them instructions either to stop Work in progress or to execute the proposed change.
2. Contractor shall submit cost proposal, including any request for an extension in Contract Times, within 14 days of receipt of Proposal Request.
3. In order to facilitate checking of Contractor's proposals for extras or credits, all proposals, except those so minor that their propriety can be seen by inspection, shall be accompanied by a complete itemization of cost including labor, materials, and Subcontracts. Labor and materials shall be itemized in a manner acceptable to the Engineer. Where major cost items are Subcontracts, they shall be itemized also. Document each proposal for a change in cost or time with sufficient data to support computations, including the following:
   a. Include list of quantities of Products, labor, and equipment required or eliminated and unit costs, with total amount of purchases and credits to be made.
   b. Indicate applicable taxes, delivery charges, equipment rental, and amounts of trade discounts.

SECTON 01250- CONTRACT MODIFICATION PROCEDURES (continued)

c. Indicate amounts for insurance and bonds.

d. Indicate amounts for Contractor's overhead and profit.

e. Include justification for any change in Contract Time.

f. Include credit for deletions from Contract, similarity documented.

g. Include an updated Contractor's Construction Schedule that indicates the effect of the change, including, but not limited to, changes in activity duration, start and finish times, and activity relationship.

(1) Use available total float before requesting an extension of the Contract Time.

4. On Owner's approval of a proposal request, Engineer will issue Change Orders for signatures by Owner and Contractor as provided in the DOCUMENT 00700 – GENERAL CONDITIONS.

a. Upon execution of a Change Order, Contractor shall promptly revise Construction Progress Schedule and Schedule of Values accordingly.

1.04 WORK CHANGE DIRECTIVE

A. As determined by the City's Utilities Director in the case of a change required to protect the Public and/or the City including health, safety and fiscal responsibility, and when such change must precede the normal Change Order/Modification process, then the Owner may initiate a Work Change Directive, signed by Owner and Engineer, including detailed descriptions of changes, and identifying method for determining any change in Contract Price or Contract Time, instructing Contractor to proceed with a change in the Work, for subsequent inclusion in a Change Order. The Work Order Directive may be limited based upon funding approved by the City Council.

1. Contractor shall promptly execute the change.

2. Work Change Directives shall be issued on Owner's standard form.

B. Contractor shall maintain detailed records for changes in the Work performed on a time and material basis.

1. Submit an itemized account and supporting data necessary to substantiate cost and time adjustments to the Contract.

C. Engineer will issue Change Order CONDITIONS.

D. Upon execution of a subsequent Change Order, Contractor shall promptly revise Construction Progress Schedule and Schedule of Values for signatures by Owner and Contractor as provided in DOCUMENT 00700 – GENERAL accordingly.

PART 2 – PRODUCTS - Not Applicable

PART 3 – EXECUTION - Not Applicable

END OF SECTION 01250

SECTION 01270 – UNIT PRICES

PART 1 - GENERAL

1.01 SUMMARY

A. Section Includes:

1. Submission procedures.
2. Changes of Contract Sum.
3. Description of Unit Prices.

B. Related Sections:

1. DOCUMENT 00400– BID FORM.
2. DOCUMENT 00500 –AGREEMENT.
3. DOCUMENT 00700 – GENERAL CONDITIONS.

1.02 SUBMISSION PROCEDURES

A. Submit Unit Prices for work or materials listed on the online bidding form.

1. Such Unit Prices shall apply for additions and deletions.

1.03 CHANGES TO CONTRACT SUM

A. Unit Prices shall constitute full compensation or credit, as the case may be, for the complete provision, fabrication, and installation of each item listed in this Section based solely on Work in place, including all necessary labor, product, tools, equipment, transportation, services and incidentals, appurtenances, and connections required to complete the Work in place, and including insurance, overhead, profit and supervision.

B. The Unit Prices submitted through the City's online bidding platform will apply to the net change on any given change to the scope of Work.

C. Unit Prices accepted by the Owner and Contractor shall be identified in the Owner-Contractor Agreement.

D. Contractor shall take measurements and compute quantities for which Unit Price items are applicable.

1. Engineer will verify measurements and quantities.

a. Contractor shall assist Engineer by providing necessary equipment, workers, and survey personnel as the Engineer requires.

2. Final payment for Work governed by Unit Prices will be made on the basis of the actual measurements and quantities accepted by the Engineer

SECTION 01270 – UNIT PRICES (continued)

multiplied by the Unit Price for Work which is incorporated in or made necessary by the Work.

3. Payment will not be made for any of the following:

   a. Products wasted or disposed of in a manner unacceptable to Engineer.

   b. Products which Engineer determines as unacceptable before or after installation.

   c. Product not completely unloaded from the transporting vehicle.

   d. Products installed beyond the lines and levels of the required Work.

   e. Products not installed after completion of Work.

   f. Loading, hauling, and disposing of rejected Products.

1.04 DESCRIPTION OF UNIT PRICES

Measurement and Payment of specific items shall be as specified in SECTION 01271, MEASUREMENT AND PAYMENT.

PART 2 – PRODUCTS - Not Applicable

PART 3 – EXECUTION - Not Applicable

END OF SECTION 01270

SECTION 01271 – MEASUREMENT AND PAYMENT

PART 1 - GENERAL

1.01 SUMMARY

A. This section includes delineation of measurement and payment criteria applicable to unit price work whether the unit price items are part of a unit price contract or are part of a Stipulated Price contract.

B. Defect assessment and non-payment for rejected work.

1.02 AUTHORITY

A. Measurement methods are delineated for each individual bid item under this section.

B. The Engineer will take all measurements and compute quantities accordingly.

C. Contractor shall assist by providing necessary equipment, workers, and survey personnel as required.

1.03 UNIT QUANTITIES SPECIFIED

A. Quantities and measurements indicated in the Bid Form are for bidding and contract purposes only. Quantities and measurements supplied or placed in the Work and verified by the Engineer shall determine payment.

B. If the actual Work requires more or fewer quantities than those quantities indicated, provide the required quantities at the unit prices contracted.

1.04 MEASUREMENT OF QUANTITIES

A. Measurement by Weight: Items measured by weight will use specified standard handbook weights unless otherwise specified in this section for an individual item.

B. Measurement by Volume: Unless herein noted differently, volume shall be measured by cubic dimension using mean length, width and height or thickness with survey chain, steel tape, approved distance meter, or by use of Total Surveying Stations and Engineering Software, as approved by Engineer.

C. Measurement by Area: Unless herein noted differently, area shall be measured by square dimension using mean length and width or radius, with survey chain, steel tape, approved distance meter, or by use of Total Surveying Stations and Engineering Software, as approved by Engineer.

D. Linear Measurement: Unless herein noted differently, linear measurements shall be measured at the item centerline or mean chord, with survey chain, steel tape, approved distance meter, or by use of Total Surveying Stations and Engineering Software, as approved by Engineer.

SECTION 01271 – MEASUREMENT AND PAYMENT (continued)

E. Stipulated Price Measurement: Items measured by weight, volume, area, or linear means or combination, as appropriate, as a completed item or unit of the Work.

1.05 PAYMENT

A. Payment Includes: Except as modified herein, payment shall be full compensation for all required labor, products, tools, equipment, plant, transportation, services, and incidentals; erection, application, or installation of an item of the Work; overhead and profit.

B. Final payment for Work governed by unit prices will be made on the basis of the actual measurements and quantities accepted by the Engineer multiplied by the unit price for Work which is incorporated in or made necessary by the Work.

1.06 DEFECT ASSESSMENT

A. Replace the Work, or portions of the Work, not conforming to specified requirements.

B. If, in the opinion of the Engineer, it is not practical to remove and replace the Work, the Engineer will direct the following remedy:

1. The defective Work will be repaired to the instructions of the Engineer, and the unit price will be adjusted to a new price at the discretion of the Engineer.

C. The authority of the Engineer to assess the defect and identify payment adjustment is final.

1.07 NON-PAYMENT FOR REJECTED PRODUCTS

A. Payment will not be made for any of the following:

1. Products wasted or disposed of in a manner that is not acceptable.
2. Products determined as unacceptable before or after placement.
3. Products not completely unloaded from the transporting vehicle.
4. Products placed beyond the lines, levels, or boundaries of the required Work.
5. Products remaining on hand after completion of the Work.
6. Loading, hauling and disposing of rejected Products.
7. Work performed beyond the specified limits unless authorized by the Engineer.

SECTION 01271 – MEASUREMENT AND PAYMENT (continued)

1.08 BID ITEMS

1. General Conditions

   Payment for the above item will be paid at the lump sum (LS) price bid. This item includes full compensation for all overhead items required by the Contract, and any other items required by the General Conditions or Supplemental Conditions.

2. Bonds and Insurance

   Payment for the above item will be paid at the lump sum (LS) price bid. This item includes full compensation for bonds and insurance required by the Contract.

3. Mobilization

   Payment for the above item will be paid at the lump sum (LS) price bid. The payment shall cover mobilization required to construct the project as shown on the Plans and stated in the Specifications. This item includes full compensation for the mobilization required by the Contract, including all materials, equipment, and labor costs. Mobilization shall not exceed 5% of the total bid amount (not including bonds and insurance and trench and excavation safety).

4. OSHA Trench Safety

   Payment for the above item will be paid at the lump sum (LS) price bid. This item includes full compensation for the OSHA Trench Safety required by the contract. After award of contract, the Contractor shall submit to the Owner a cost breakdown for the work involved in the lump sum price bid for OSHA Trench Safety System and shall, with each periodic payment request, submit a certification by the "competent person" as defined in 29 CFR 1926.650(b) that the Contractor has complied with the provisions of the OSHA Standard for Excavation and Trench Safety Systems, 29 CFR 1926 Subpart P, for work for which payment is requested. Periodic payments will be made in proportion to the amount of work accomplished, as determined by the Owner, and will be full compensation for trench and excavation safety, including all materials, labor, and incidentals necessary to perform the work.

5. Construction of the Medium Voltage Switchgear Building

   Payment for the above item will be paid at the lump sum (LS) price bid. Payments shall be full compensation for the complete construction of the Medium Voltage Switchgear Building as shown on the Plans and stated in the Specifications including site preparation, excavation, backfill, reinforced concrete, masonry walls, aluminum doors, overhead coiling doors, miscellaneous metals, roofing, HVAC, electrical, site paving, and all materials, equipment, tools, labor, and incidentals necessary to complete the work.

SECTION 01271 – MEASUREMENT AND PAYMENT (continued)

6. Installation of the Medium Voltage Switchgear

   Payment for the above item will be paid at the lump sum (LS) price bid. Payments shall be full compensation for the installation of the pre-purchased Medium Voltage Switchgear as shown on the Plans and stated in the Specifications including offloading, installation of the equipment, connections to existing facilities, startup coordination, and all materials, equipment, tools, labor, and incidentals necessary to complete the work.

7. Site Restoration

   Payment for the above item will be paid at the lump sum (LS) bid price. Payment shall be full compensation for the site restoration as shown on the Plans and stated in the Specifications including topsoil, solid sod, and all materials, equipment, tools, labor, and incidentals necessary to complete the work.

There shall be no separate payment for all other labor, equipment, materials, incidentals, tools, appurtenances, permits and not specifically listed in the Bid Form work required for a complete installation acceptable to the City of Fayetteville.

PART 2 – PRODUCTS - Not Applicable

PART 3 – EXECUTION - Not Applicable

END OF SECTION

SECTION 01290 – PAYMENT PROCEDURES

PART 1 - GENERAL

1.01 SUMMARY

A. Section Includes:

1. Schedule of values.
2. Applications for payment.

B. Related Sections:

1. DOCUMENT 00700 – GENERAL CONDTIONS.

1.02 APPLICATIONS FOR PAYMENT

A. Comply with Arkansas Code § 22-9-101.

Title 22 Public Property

Chapter 9 Public Works

Subchapter 1 - General Provisions

A.C.A. § 22-9-101. Observation by registered professionals required.

B. Format: Document 01290.01 supported by Document 01290.02 or other approved format.

1. Owner will provide Contractor an electronic copy of Documents 01290.01 and 01290.02.

C. Payment Period: As specified under DOCUMENT 00700 – GENERAL CONDITONS Article 14.

D. Preparation of Applications:

1. Present required information in typewritten form.
2. Execute application by signature of authorized officer of Contractor's firm.
3. Indicate dollar value in each column of each line item for portion of Work completed through the last day of the application period, and for products properly stored in accordance with the Contract Documents through the last day of the previous application period.
4. Round off dollar values to nearest dollar.
5. Complete every entry on form.
6. Indicate each authorized Change Order as separate items on continuation sheet.
    a. List by appropriate Change Order Number.

SECTION 01290 – PAYMENT PROCEDURES (continued)

b. Indicate dollar value breakdown of each Change Order by each applicable Project Manual Section.

E. Submittal Procedure:

1. Comply with DOCUMENT 00700 - GENERAL CONDITIONS Article 14.

2. Submit 1 copy of each Application for Payment.

3. Submit an updated Construction Progress Schedule with each Application for Payment.

4. Submit waivers of mechanics liens from Contractor, Subcontractors, sub-subcontractors, and Material and Equipment Suppliers for amounts certified by Engineer for construction period covered by previous application for payment.

   a. Submit on form acceptable to Owner.

5. Substantiating data:

   a. Contractor's application for payment, submit data justifying dollar amounts which are in question.

   b. Provide 1 copy of data with cover letter for each copy of Application for Payment.

      (1) Indicate application number and date.

      (2) List each item in question by continuation sheet identification.

6. Submit application for final payment in accordance with DOCUMENT 00700 – GENERAL CONDITIONS Article 14.

F. Minimum Approvals – City of Fayetteville.

1.

2.

PART 2 – PRODUCTS - Not Applicable

PART 3 – EXECUTION - Not Applicable

END OF SECTION 01290

CITY OF
FAYETTEVILLE
ARKANSAS

APPLICATION FOR PAYMENT
Bid 26-30, Construction – Noland WWTF Switchgear
Noland Wastewater Treatment Plant Switchgear Replacement

Application Number: _____
Date: _____
Contractor: _____ Ordinance/Resolution Number: _____
Address: _____ Effective: _____
_____ Encumbrance No: _____
Application for Work Accomplished Through the Date of: _____

Original Contract Price ..... [1]$_____
Net Change by Change Orders _____ through _____ ..... [2]$_____
Current Contract Price (1 + 2) ..... [3]$_____
Completed Work .....[4]$_____
Stored Material .....[5]$_____
Total Completed and Stored to Date (4+5) [6]$_____
Previous Payments .....[7]$_____
Previous Retainage .....[8]$_____
Total Previous Applications (7+8) ..... [9]$_____
Amount This Application (6-9) .....[10]$_____
Less Retainage This Application* ..... [-][11]$_____
Release of Retainage .....[12]$_____
Due This Application (10-11+12) .....[13]$_____

---

* Retainage on Completed Work Only
Accompanying Documentation: Attached Schedule of Values

CONTRACTOR's Certification:

The undersigned Contractor certifies that (1) all previous progress payments received from Owner on account of Work done under the Contract referred to above have been applied on account to discharge Contractor's legitimate obligations incurred in connection with Work covered by all prior Applications for Payment; (2) title of all Work, materials and equipment incorporated into said Work or otherwise listed in or covered by this Application for Payment will pass to Owner at time of payment free and clear of all Liens, security interests and encumbrances (except such as are covered by a Bond acceptable to Owner indemnifying Owner against any such Lien, security interest or encumbrance); (3) all Work covered by this Application for Payment is in accordance with the Contract Documents and not defective, and (4) all labor standards contract requirements have been complied with by Contractor and by each subcontractor employing mechanics or laborers at the site of the work.

Dated:_____ _____
CONTRACTOR

By: _____

STATE OF _____)

COUNTY OF _____)

Subscribed and Sworn to before me this ____ day of _____, _____

My commission expires:_____ _____
Notary Public

OWNER's Certification for Payment:

In accordance with the Contract Documents, based on on-site observations and the data comprising this application, the Owner's representatives certify that to the best of their knowledge, information and belief the Work has progressed as indicated, the quality of the Work is in accordance with the Contract Documents, and the Contractor is entitled to payment of the AMOUNT CERTIFIED.

AMOUNT CERTIFIED ..... $_____

(Attach explanation if amount certified differs from the amount applied for. Initial all figures on this Application and on the Schedule of Values that are changed to conform to the amount certified.)

OWNER's Approval

By:_____ Date: _____

Trash and Recycling Manager

By:_____ Date: _____

Trash and Recycling Superintendent

CITY OF
FAYETTEVILLE
ARKANSAS

CERTIFICATE OF SUBSTANTIAL COMPLETION

Contract Number: 26-30, Construction – Noland WWTF Switchgear

Contract Title: NOLAND WASTEWATER TREATMENT PLANT SWITCHGEAR REPLACEMENT

CONTRACTOR: _____

DATE OF ISSUANCE: _____

PROJECT OR DESIGNATED PORTION SHALL INCLUDE:

The Work performed under this Contract has been reviewed and found, to the Engineer's best knowledge, information and belief, to be substantially complete. Substantial Completion is the state in the progress of the Work when the Work or designated portion thereof is sufficiently complete in accordance with the Contract Documents so the Owner can occupy or utilize the Work for its intended use. The date of Substantial Completion of Project or portion thereof designated above is hereby established as _____ which is also the date of commencement of applicable warranties required by the Contract Documents, except as stated below:

A list of items to be completed or corrected is attached hereto. The failure to include any items on such list does not alter the responsibility of the Contractor to complete all Work in accordance with the Contract Documents.

_____	_____	_____
ENGINEER	BY	DATE

The Contractor will complete or correct the Work on the list of items attached hereto within _____ days from the above date of Substantial Completion.

_____	_____	_____
CONTRACTOR	BY	DATE

The Owner accepts the Work or designated portion thereof as substantially complete and will assume full possession thereof at _____ (time) on _____(date).

_____	_____	_____
OWNER'S REPRESENTATIVE	BY	DATE

THIS PAGE INTENTIONALLY LEFT BLANK

CITY OF FAYETTEVILLE ARKANSAS

CONTRACTOR AFFIDAVIT FOR FINAL PAYMENT

Contract Number: 26-30, Construction – Noland WWTF Switchgear

Contract Title: Noland Wastewater Treatment Plant Switchgear Replacement

STATE OF _____)
)SS
COUNTY OF _____)

The Undersigned, _____ of lawful
(Name)
age, being first duly sworn, states under oath as follows:

1. I am the _____ of _____who is the general
(Title) (Contractor)
contractor for the City on Contract No. _____ and Contract Name/Title: Noland Wastewater Treatment Plant Switchgear Replacement

2. All payrolls, material bills, use of equipment and other indebtedness connected with the Work for this Contract have been paid and all claims of whatever nature have been satisfied, as required by the Contract.

3. Contractor certifies that each Subcontractor has received full payment for its respective work in connection with the Contract.

4. This affidavit is made in behalf of the Contractor for the purpose of securing from the City of Fayetteville, Arkansas, the certification of completion of the Contract and receiving payment therefore.

CONTRACTOR_____

By _____
(Signature)

Title _____

On this _____ day of _____, _____, before me

appeared _____, to me personally known to be the

_____of the_____,

and who executed the foregoing instrument and acknowledged that (s)he executed the same on behalf of

the _____ as its free act and deed.

IN WITNESS WHEREOF, I have hereunto set my hand and affixed my official seal on the day and year first above written.

My commission expires:

_____ _____
Notary Public

THIS PAGE INTENTIONALLY LEFT BLANK

CONTRACTOR AFFIDAVIT FOR FINAL PAYMENT

Contract Number: 26-30, Construction – Noland WWTF Switchgear

Contract Title: Noland Wastewater Treatment Plant Switchgear Replacement

STATE OF _____)
)SS
COUNTY OF _____)

The Undersigned, _____ of lawful
(Name)
age, being first duly sworn, states under oath as follows:

1. I am the _____ of _____who is the general
(Title) (Contractor)
contractor for the City on Contract No. 26-30, Construction – Noland WWTF Switchgear and Contract Name/Title: Noland Wastewater Treatment Plant Switchgear Replacement

2. All payrolls, material bills, use of equipment and other indebtedness connected with the Work for this Contract have been paid and all claims of whatever nature have been satisfied, as required by the Contract.

3. Contractor certifies that each Subcontractor has received full payment for its respective work in connection with the Contract.

4. This affidavit is made in behalf of the Contractor for the purpose of securing from the City of Fayetteville, Arkansas, the certification of completion of the Contract and receiving payment therefore.

CONTRACTOR_____

By _____
(Signature)

Title _____

On this _____ day of _____, _____, before me

appeared _____, to me personally known to be the

_____of the_____,

and who executed the foregoing instrument and acknowledged that (s)he executed the same on behalf of

the _____ as its free act and deed.

IN WITNESS WHEREOF, I have hereunto set my hand and affixed my official seal on the day and year first above written.

My commission expires:

_____ _____
Notary Public

THIS PAGE INTENTIONALLY LEFT BLANK

CITY OF FAYETTEVILLE ARKANSAS

SUBCONTRACTOR AFFIDAVIT FOR FINAL PAYMENT

Contract Number: 26-30, Construction – Noland WWTF Switchgear

Contract Title: Noland Wastewater Treatment Plant Switchgear Replacement

STATE OF _____)
)SS
COUNTY OF _____)

The Undersigned, _____ of lawful age, being first duly sworn,
(Name)
states under oath as follows:

1. I am the _____ of _____hereinafter "Subcontractor"
(Title) (Contractor)
to _____, general contractor on Noland Wastewater Treatment Plant Switchgear Replacement, Bid 26-30, Construction – Noland WWTF Switchgear_.
(Name of Contractor) (Contract Title and Number)

2. All payrolls, material bills, use of equipment and other indebtedness connected with the work for this project have been paid and all claims of whatever nature have been satisfied.

3. A total of $_____has been received as full compensation for: _____
performed in connection with the contract. (area / scope of work)

4. This affidavit is made on behalf of the Contractor for the purpose of securing from Fayetteville, Arkansas, the certification of completion of the project and receiving payment therefore.

SUBCONTRACTOR_____

By _____
(Signature)

Title _____

On this _____ day of _____, _____, before me

appeared _____, to me personally known to be the

_____of the_____,

and who executed the foregoing instrument and acknowledged that (s)he executed the same on behalf of the

_____ as its free act and deed.

IN WITNESS WHEREOF, I have hereunto set my hand and affixed my official seal on the day and year first above written.

My commission expires:

_____ _____
Notary Public

THIS PAGE INTENTIONALLY LEFT BLANK

SECTION 01320 – PROJECT MEETINGS, SCHEDULES, AND REPORTS

PART 1 - GENERAL

1.01 Summary: This Section includes the following administrative and procedural requirements:

A. Project Meetings:

1. Preconstruction conference.

2. Progress meetings.

B. Schedules and Reports:

1. Comply with GENERAL CONDITIONS

C. Related Work Specified Elsewhere:

1. For Schedules: SECTION 01321.

1.02 PROJECT MEETINGS:

A. Preconstruction Conference:

1. Engineer will conduct a meeting within 60 days after the Effective Date of the Agreement, to review items stated in the following agenda and to establish a working understanding between the parties as to their relationships during performance of the Work.

2. Preconstruction conference shall be attended by:

a. Contractor and his superintendent.

b. Engineer and Resident Project Representative if any.

c. Representative(s) of Owner.

d. At Engineer's option, representatives of principal Subcontractors and Suppliers.

3. Meeting Agenda:

a. Construction schedules.

b. Critical Work sequencing.

c. Designation of responsible personnel.

d. Project coordination.

e. Procedures and Processing of:

(1) Field decisions.

(2) Substitutions.

SECTION 01320 – PROJECT MEETINGS, SCHEDULES, AND REPORTS (continued)

(3) Submittals.

(4) Change Orders.

(5) Applications for Payment.

(6) Proposal Requests.

(7) Contract Closeout.

(8) Requests for Interpretation.

(9) Field Orders.

(10) Work Change Directives.

f. Procedures for testing.

g. Procedures for maintaining record documents.

h. Use of Premises:

(1) Office, work, and storage areas.

(2) Owner's requirements.

i. Construction facilities, controls, and construction aids.

j. Temporary utilities.

k. Safety and first-aid.

l. Security.

m. Requirements for start-up of equipment.

n. Inspection and acceptance of equipment put into service during construction period.

o. Distribution of Contract Documents

4. Location of Meeting: At or near the Project Site.

5. Reporting:

a. Within 7 working days after the meeting, Engineer will prepare and distribute minutes of the meeting to Owner and Contractor.

b. Contractor shall provide copies to Subcontractors and major Suppliers.

B. Progress Meetings:

1. Engineer shall schedule and conduct monthly meetings, or at other intervals as requested by Owner. Representatives of the Engineer, Resident Project Representative, and Contractor shall be present at each meeting. With

SECTION 01320 – PROJECT MEETINGS, SCHEDULES, AND REPORTS (continued)

Engineer's concurrence, Contractor may request attendance by representatives of Subcontractors, Suppliers, or other entities concerned with current program or involved with planning, coordination, or performance of future activities. All participants in the meeting shall be familiar with the Project and authorized to conclude matters relating to the Work.

a. Contractor and each Subcontractor represented shall be prepared to discuss the current construction progress report and any anticipated future changes to the schedule.

2. Location of Meetings: At or near Project Site.

3. Reporting:

   a. Within 7 working days after each meeting, Engineer shall prepare and distribute minutes of the meeting to Owner and Contractor.

   b. Contractor shall distribute copies to principal Subcontractors and Suppliers.

PART 2 – PRODUCTS - Not Applicable

PART 3 – EXECUTION - Not Applicable

END OF SECTION 01320

SECTION 01320 – PROJECT MEETINGS, SCHEDULES, AND REPORTS (continued)

THIS PAGE INTENTIONALLY LEFT BLANK

SECTION 01321 – SCHEDULE

PART 1 - GENERAL

1.01 SUMMARY

A. This Section includes procedural requirements for preparation, submittal, and updating of Contractor's construction progress schedules.

B. Related Work:

1. Documents affecting work of this Section include, but are not limited to: General Conditions, Supplementary Conditions, and Sections in Division 1 of these Specifications.

2. Section 01290 – Payment Procedures.

3. Section 01320 – Project Meetings, Schedules, and Reports.

1.02 FORMAT

A. Prepare Schedules as either a Gantt chart with separate bar for each major portion of Work or operation, identifying first work day of each week, or a Critical Path Method (CPM) progress schedule.

B. Sequence of Listings: The chronological order of the start of each item of Work.

C. Scale and Spacing: To provide space for notations and revisions.

D. Sheet Size: Minimum multiples of 8-1/2 x 11 inches.

1.03 CONTENT

A. Show complete sequence of construction by activity, with dates for beginning and completion of each element of construction. The schedule shall clearly indicate the sequence of construction for the various items that involve either existing and/or potentially relocated utilities. This schedule shall have the least negative impact on the adjacent property owners and provide an orderly sequence that will produce the least disruptive action for utilities and their customers.

B. Identify work of separate stages and other logically grouped activities.

C. Provide sub-schedules to define critical portions of the entire Schedule.

D. Show accumulated percentage of completion of each item, and total percentage of Work completed, as of the cut-off date for each monthly pay estimate.

SECTION 01321 – SCHEDULE (continued)

1.04 SUBMITTALS

A. Submit a finalized construction progress schedule within fifteen (15) days after date of Notice of Award or at least seven (7) days prior to the pre-construction conference, whichever occurs first. After review, resubmit required revised data within ten (10) days.

B. Submit monthly revisions with each pay estimate in the number of opaque reproductions that Engineer requires, plus two copies, which will be retained by Engineer.

1.05 REVISIONS TO SCHEDULES

A. Indicate progress of each activity to date of submittal, and projected completion date of each activity.

B. Identify activities modified since previous submittal, major changes in scope, and other identifiable changes.

C. Provide narrative report to define problem areas, anticipated delays, and impact on Schedule. Report corrective action taken, or proposed, and its effect.

1.06 DISTRIBUTION

A. Distribute copies of reviewed Schedules to project site file, Subcontractors, suppliers, and other concerned parties.

B. Instruct recipients to promptly report, in writing, problems anticipated by projections indicated in Schedules.

PART 2 – PRODUCTS - Not Applicable

PART 3 – EXECUTION - Not Applicable

END OF SECTION 01321

SECTION 01420 – DEFINITIONS AND STANDARDS

PART 1 - GENERAL

1.01 SUMMARY:

A. Definitions:

1. Basic contract definitions used in the Contract Documents are defined in the GENERAL CONDITIONS. Definitions and explanations are not necessarily either complete or exclusive, but are general for the Work.

2. General Requirements are the provisions or requirements of DIVISION 1 Sections, and which apply to the entire Work of the Contract.

B. Related Information Specified Elsewhere: Specification standards and associations applicable to the Work are specified in each Section.

1.02 SPECIFICATION FORMAT AND CONTENT EXPLANATIONS:

A. Specification Format: The Specifications are organized into two (2) major divisions of CONTRACT DOCUMENTS and TECHNICAL SPECIFICATIONS.

B. Specification Content:

1. These Specifications apply certain conventions in the use of language and the intended meaning of certain terms, words, and phrases when used in particular situations or circumstances. These conventions are explained as follows:

a. Imperative and Streamlined Language: These Specifications are written in imperative and abbreviated form. This imperative language of the technical Sections is directed at the Contractor, unless specifically noted otherwise. Incomplete sentences shall be completed by inserting “shall,” “the Contractor shall,” and “shall be,” and similar mandatory phrases by inference in the same manner as they are applied to notes on the Drawings. The words “shall be” shall be supplied by inference where a colon (:) is used within sentences or phrases. Except as worded to the contrary, fulfill (perform) all indicated requirements whether stated imperatively or otherwise.

b. Specifying Methods: The techniques or methods of specifying requirements varies throughout text, and may include “prescriptive,” “compliance with standards,” “performance,” “proprietary,” or a combination of these. The method used for specifying one unit of Work has no bearing on requirements for another unit of Work.

c. Overlapping and Conflicting Requirements: Where compliance with two or more industry standards or sets of requirements is specified, and overlapping of those different standards or requirements establishes different or conflicting minimums or levels of quality, notify Engineer for a decision as specified in GENERAL CONDITIONS.

SECTION 01420 – DEFINITIONS AND STANDARDS (continued)

d. Abbreviations: Throughout the Contract Documents are abbreviations implying words and meanings which shall be appropriately interpreted. Specific abbreviations have been established, principally for lengthy technical terminology and in conjunction with coordination of Specification requirements with notations on Drawings and in schedules. These are normally defined at first instance of use. Organizational and association names and titles of general standards are also abbreviated.

C. Assignment of Specialists: In certain instances, Specification text requires that specific Work be assigned to specialists in the operations to be performed. These specialists shall be engaged for performance of those units of Work, and assignments are requirements over which Contractor has no choice or option. These assignments shall not be confused with, and are not intended to interfere with, enforcement of building codes and similar regulations governing the Work, local trade and union jurisdictions, and similar conventions. Nevertheless, final responsibility for fulfillment of Contract requirements remains with Contractor.

D. Trades: Except as otherwise specified or indicated, the use of titles such as "carpentry" in Specification text, implies neither that the Work must be performed by an accredited or unionized tradesperson of corresponding generic name (such as "carpenter"), nor that specified requirements apply exclusively to work by tradespersons of that corresponding generic name.

1.03 DRAWING SYMBOLS:

A. Except as otherwise indicated, graphic symbols used on Drawings are those symbols recognized in the construction industry for purposes indicated. Refer instances of uncertainty to Engineer for clarification.

1.04 INDUSTRY STANDARDS:

A. Applicability of Standards: Except where the Contract Documents include more stringent requirements, applicable construction industry standards have the same force and effect as if bound or copied directly into the Contract Documents. Such standards are made a part of the Contract Documents by reference and are stated in each Section.

1. Referenced standards, referenced directly in Contract Documents or by governing regulations, have precedence over nonreferenced standards which are recognized in industry for applicability to the Work.

2. Where compliance with an industry standard is required, standard in effect shall be as stated in GENERAL CONDITIONS.

3. Where an applicable code or standard has been revised and reissued after the date of the Contract Documents and before performance of Work affected, the Engineer will decide whether to issue a Change Order to proceed with the updated standard.

SECTION 01420 – DEFINITIONS AND STANDARDS (continued)

4. In every instance the quantity or quality level shown or specified shall be the minimum to be provided or performed. The actual installation may comply exactly, within specified tolerances, with the minimum quantity or quality specified, or it may exceed that minimum within reasonable limits. In complying with these requirements, indicated numeric values are minimum or maximum values, as noted, or appropriate for the context of the requirements. Refer instances of uncertainty to the Engineer for a decision before proceeding.

5. Each entity engaged in construction on the Project is required to be familiar with industry standards applicable to that entity's construction activity. Copies of applicable standards are not bound with the Contract Documents.

    a. Where copies of standards are needed for performance of a required construction activity, Contractor shall obtain copies directly from the publication source.

B. Abbreviations and Names: Trade association names and titles of general standards are frequently abbreviated. Where such acronyms or abbreviations are used in the Specifications or other Contract Documents, they mean the recognized name of the trade association, standards generating organization, authority having jurisdiction, or other entity applicable to the context of the text provision.

PART 2 – PRODUCTS - Not Applicable

PART 3 – EXECUTION - Not Applicable

END OF SECTION 01420

SECTION 01420 – DEFINITIONS AND STANDARDS (continued)

THIS PAGE INTENTIONALLY LEFT BLANK

SECTION 01530 – TEMPORARY BARRIERS AND CONTROLS

PART 1 - GENERAL

1.01 SUMMARY:

A. This Section includes General Requirements for:

1. Safety and protection of Work
2. Safety and protection of existing property
3. Barriers
4. Security
5. Environmental controls
6. Access roads and parking areas
7. Traffic control and use of roadways
8. Railroad service

B. Related Work Specified Elsewhere:

1. Temporary Utilities and Facilities: SECTION 01560

PART 2 - PRODUCTS – Not Applicable.

PART 3 - EXECUTION

3.01 ARKANSAS ONE CALL:

A. The Contractor will be responsible for contacting Arkansas One Call in order to determine the location of all utilities in all work areas relating to any excavation performed by the contractor. The City of Fayetteville shall be responsible for contacting Arkansas One Call in order to determine the location of all utilities in all work areas relating to any Excavation performed by the City of Fayetteville crews.

3.02 SAFETY AND PROTECTION OF WORK AND PROPERTY:

A. General:

1. Provide for the safety and protection of the Work as set forth in GENERAL CONDITIONS. Provide protection at all times against rain, wind, storms, frost, freezing, condensation, or heat so as to maintain all Work and Equipment and Materials free from injury or damage. At the end of each day, all new Work likely to be damaged shall be appropriately protected.

2. Notify Engineer immediately at any time operations are stopped due to conditions which make it impossible to continue operations safely or to obtain proper results.

SECTION 01530 – TEMPORARY BARRIERS AND CONTROLS (continued)

3. Construct and maintain all necessary temporary drainage and do all pumping necessary to keep excavations, floors, pits, trenches, manholes, and ducts free of water.

B. Property Other than Owner's:

1. Provide for the safety and protection of property as set forth in the GENERAL CONDITIONS. Report immediately to the owners thereof and promptly repair damage to existing facilities resulting from construction operations.

2. Names and telephone numbers of representatives of agencies and utilities having jurisdiction over streets and utilities in the Work area can be obtained from Engineer for the agencies listed below. Concerned agencies or utilities shall be contacted a minimum of 24 hours prior to performing Work, closing streets and other traffic areas, or excavating near underground utilities or pole lines.

   a. Water

   b. Pipeline companies

   c. Telephone

   d. Electric

   e. Fire

   f. Police

3. Operation of valves or other appurtenances on existing utilities, when required, shall be by or under the direct supervision of the owning utility.

4. Where fences are to be breached on private property, the owners thereof shall be contacted and arrangements made to ensure proper protection of any livestock or other property thus exposed.

5. The applicable requirements specified for protection of the Work shall also apply to the protection of existing property of others.

6. Before acceptance of the Work by Owner, restore all property affected by Contractor's operations to the original or better condition.

7. The Contractor shall take precautions and use care to avoid damaging, disturbing, or disrupting existing private facilities on private or public property, i.e., fences, sprinkler facilities, shrubs, landscaping, etc. The Contractor shall restore, to the City of Fayetteville's satisfaction, any property damaged by the Contractor, at the Contractor's expense.

SECTION 01530 – TEMPORARY BARRIERS AND CONTROLS (continued)

3.03 SIGNAGE AND BARRIERS:

A. General:

1. Furnish, install, and maintain suitable barriers as required to prevent public entry, protect the public, and to protect the Work, existing facilities, trees, and plants from construction operations. Remove when no longer needed or at completion of Work.

2. Materials may be new or used, suitable for the intended purpose, but shall not violate requirements of applicable codes and standards or regulatory agencies.

3. Barriers shall be of a neat and reasonable uniform appearance, structurally adequate for the required purposes.

4. Maintain barriers in good repair and clean condition for adequate visibility. Relocate barriers as required by progress of Work.

5. Repair damage caused by installation and restore area to original or better condition. Clean the area.

6. The Contractor is responsible for all signing and barricading and will comply with those portions of the "Arkansas Manual on Uniform Traffic Control Devices for Streets and Highways" which pertain to construction.

B. Tree and Plant Protection:

1. Preserve and protect existing trees and plants at the Site which are designated to remain and those adjacent to the Site.

2. Provide temporary barriers around each, or around each group of trees and plants. Unless indicated or specified otherwise, construct to a height of 6 feet around trees, and to a height to adequately protect plants.

3. Consult with Engineer and remove agreed-on roots and branches which will interfere with construction. Employ qualified tree surgeon to remove and to treat cuts.

4. Protect root zones of trees and plants as follows:

   a. Do not allow vehicular traffic or parking.

   b. Do not store materials or products.

   c. Prevent dumping of refuse or chemically injurious materials or liquids.

   d. Prevent puddling or continuous running water.

5. Carefully supervise excavating, grading and filling, and subsequent construction operations to prevent damage.

SECTION 01530 – TEMPORARY BARRIERS AND CONTROLS (continued)

6. Remove and replace, or suitably repair, trees and plants which are damaged or destroyed due to construction operations, and which were designated to remain.

3.04 ENVIRONMENTAL CONTROLS:

A. Noise Control: City of Fayetteville Ordinances and OSHA requirements shall be adhered to for this contract.

B. Dust Control:

1. Provide positive methods and apply dust control materials to minimize raising dust from construction operations; and to prevent airborne dust from dispersing into the atmosphere.

2. Clean interior spaces prior to the start of finish painting and continue cleaning on an as-needed basis until painting is finished.

3. Schedule operations so that dust and other contaminants resulting from cleaning process will not fall on wet or newly-coated surfaces.

C. Water and Erosion Control:

1. Provide methods to control surface water to prevent damage to the Project, the Site, or adjoining properties.

2. Plan and execute construction and earthwork by methods to control surface drainage from cuts and fills, and from borrow and waste disposal areas, to prevent erosion and sedimentation.

a. Hold the areas of bare soil exposed at one time to a minimum.

b. Provide temporary control measures such as berms, dikes, and drains.

3. Control fill, grading, and ditching to direct surface drainage away from excavations, pits, tunnels, and other construction areas; and to direct drainage to proper runoff.

4. Provide, operate, and maintain hydraulic equipment of adequate capacity to control surface and groundwater.

5. Dispose of drainage water in a manner to prevent flooding, erosion, or other damage to any portion of the Site or to adjoining areas.

6. Provide temporary drainage where the roofing or similar waterproof deck construction is completed prior to the connection and operation of the permanent drainage piping system.

7. Comply with all other requirements indicated or specified.

SECTION 01530 – TEMPORARY BARRIERS AND CONTROLS (continued)

D. Debris Control and Clean-Up:

1. Keep the premises free at all times from accumulations of debris, waste materials, and rubbish caused by construction operations and employees. Responsibilities shall include:

   a. Adequate trash receptacles about the Site, emptied promptly when filled.

   b. Periodic cleanup to avoid hazards or interference with operations at the Site and to maintain the Site in a reasonably neat condition.

   c. The keeping of construction materials such as forms and scaffolding neatly stacked.

   d. Immediate cleanup to protect the Work by removing splattered concrete, asphalt, oil, paint, corrosive liquids, and cleaning solutions from walls, floors, and metal surfaces before surfaces are marred.

2. Prohibit overloading of trucks to prevent spillages on access and haul routes. Provide periodic inspection of traffic areas to enforce requirements.

3. Final cleanup is specified in SECTION 01780 - CONTRACT CLOSEOUT.

E. Pollution Control:

1. Provide methods, means, and facilities required to prevent contamination of soil, water, or atmosphere by the discharge of hazardous or toxic substances from construction operations.

2. Provide equipment and personnel, perform emergency measures required to contain any spillages, and remove contaminated soils or liquids. Excavate and dispose of any contaminated earth off-Site in approved locations, and replace with suitable compacted fill and topsoil.

3. Take special measures to prevent harmful substances from entering public waters, sanitary, or storm sewers.

4. Adhere to the Spill Prevention Control and Countermeasures Plan (SPCCP) requirements as stated in 40 CFR Part 112.

3.05 ACCESS ROADS AND PARKING AREAS:

A. New Temporary On-Site Roads and Parking Areas:

1. Locate roads, drives, walks, and parking facilities to provide access to construction offices, mobilization, Work, storage areas, and other areas required for execution of the Contract.

   a. Consult with Engineer regarding any desired deviation therefrom.

SECTION 01530 – TEMPORARY BARRIERS AND CONTROLS (continued)

b. Size of parking facilities shall be adequate to provide for needs of Contractor's personnel, Resident Project Representatives, and visits to Site by Engineer and Owner.

2. Provide access for emergency vehicles. Maintain driveways a minimum of 15 feet wide between and around combustible materials in storage and mobilization areas.

3. Maintain traffic areas free of excavated materials, construction equipment, snow, ice, and debris.

4. Construct temporary bridges and culverts to span low areas and allow unimpeded drainage.

5. Keep fire hydrants and water control valves free from obstruction and accessible for use.

6. Construction:

a. Clear areas required.

b. Fill, compact, and grade areas as necessary to provide suitable support for vehicular traffic under anticipated loadings. Materials and construction shall be as indicated or specified.

c. Provide for surface drainage of facilities and surrounding areas.

d. Maintain roads, walks, and parking areas in a sound, clean condition. Repair or replace portions damaged during progress of Work.

7. Removal:

a. Completely remove temporary materials and construction when construction needs can be met by use of permanent installation, unless construction is to be integrated into permanent construction. Remove and dispose of compacted materials to depths required by various conditions to be met in completed Work.

b. Restore areas to original, better, or specified condition at completion of Work.

3.06 TRAFFIC CONTROL AND USE OF ROADWAYS:

A. Traffic Control:

1. The Contractor shall plan and execute the work so that interference with the flow of traffic and the passage of pedestrians will be the minimum possible.

2. The CONTRACTOR shall arrange crews in a way to have continuous work from the time a particular project has begun until it is complete. The Contractor shall schedule crews in a way to have continuous work from the

SECTION 01530 – TEMPORARY BARRIERS AND CONTROLS (continued)

time a work order has been initiated until it is complete. The Contractor shall not demobilize until all work from the work order is complete.

3. It shall be the responsibility of the CONTRACTOR to inform the City of Fayetteville regarding dates and locations of work activities that may impact the flow of traffic.

4. The Contractor shall be responsible for making provisions for the safe and free passage of persons and vehicles by, over, or around the work until the project is completed. Such provisions shall be satisfactory with the Owner and State, County and local authority having jurisdiction in the area of work.

5. Provide, operate, and maintain equipment, services, and personnel, with traffic control and protective devices, as required to expedite vehicular traffic flow on haul routes, at Site entrances, on-Site access roads, and parking areas. This includes traffic signals and signs, flagmen, flares, lights, barricades, and other devices or personnel as necessary to adequately protect the public.

6. Remove temporary equipment and facilities when no longer required. Restore grounds to original, better, or specified condition when no longer required.

7. When required by the State, County or local authority that traffic be maintained over any construction work in a public or private highway, street, road, or other vehicle traffic path, and such traffic cannot be maintained on the alignment of the original roadbed or pavement, the Contractor shall, at his own expense, provide and/or construct and maintain a detour around the work. Such detours shall be satisfactory to the Owner and to State, County, or local authority. The Contractor shall provide and maintain all barricades, signs, torches, lights and markers around the work as may be required by the various agencies having jurisdiction in the work area. The Contractor shall also provide qualified flagmen to direct traffic while working upon a highway, street or road over which traffic must pass.

8. Excavated areas within the traffic lanes of highways, streets or roads and pedestrian walkways shall be backfilled as soon as possible and the area opened to traffic.

9. Bridge over open trenches where necessary to maintain traffic.

10. Consult with governing authorities to establish public thoroughfares which will be used as haul routes and Site access. All operations shall meet the approval of owners or agencies having jurisdiction.

11. The Contractor shall obtain permission from the applicable State, County or local authority(ies) before closing or obstructing any public highway, street or road. This shall include, but not necessarily be limited to, coordination with Fire Departments, 911 services, and other emergency services.

SECTION 01530 – TEMPORARY BARRIERS AND CONTROLS (continued)

12. The Contractor shall make the same provisions as described above for the passage of vehicular and pedestrian traffic between private property and public highways, streets and roads or other provisions that are satisfactory to the Owner and the property owners involved.

B. Maintenance of Roadways:

1. Repair roads, walkways, and other traffic areas damaged by operations. Keep traffic areas as free as possible of excavated materials and maintain in a manner to eliminate dust, mud, and hazardous conditions.

2. All operations and repairs shall meet the approval of owners or agencies having jurisdiction.

END OF SECTION 01530

SECTION 01560 – TEMPORARY UTILITIES AND FACILITIES

PART 1 - GENERAL

1.01 SUMMARY:

A. This Section includes requirements of a temporary nature not normally incorporated into final Work. It includes the following:

1. Utility services.
2. Construction and support facilities.
3. Construction aids.
4. Safety and health.
5. Fire protection.

B. Related Work Specified Elsewhere:

1. Temporary Barriers and Controls: SECTION 01530.

1.02 REFERENCES:

A. American National Standards Association (ANSI):

1. A10 Series – Safety Requirements for Construction and Demolition.

B. National Electrical Contractors Association (NECA):

1. Electrical Design Library – Temporary Electrical Facilities.

C. National Fire Protection Association (NFPA):

1. 10 – Portable Fire Extinguishers.
2. 70 – National Electrical Code.
3. 241 – Safeguarding Construction, Alterations, and Demolition Operations.

D. National Electrical Manufacturers Association (NEMA).

E. Underwriters Laboratories (UL).

1.03 SUBMITTALS:

A. Temporary Utilities: Submit reports of tests, inspections, meter readings, and similar procedures performed on temporary utilities.

B. Implementation and Termination Schedule: Submit a schedule indicating implementation and termination of each temporary utility within 15 days of the date established for commencement of the Work.

SECTION 01560 – TEMPORARY UTILITIES AND FACILITIES (continued)

1.04 QUALITY ASSURANCE:

A. Regulations: Comply with industry standards and applicable laws and regulations of authorities having jurisdiction, including but not limited to:

1. Building Code requirements.

2. Health and safety regulations.

3. Utility company regulations.

4. Police, Fire Department, and rescue squad rules.

5. Environmental protection regulations.

B. Standards:

1. Comply with NFPA 10 and 241, and ANSI A10 Series standards "Temporary Electrical Facilities."

2. Comply with NEMA, NECA, and UL standards and regulations for temporary electric service. Install service in compliance with NFPA 70.

C. Inspections: Arrange for authorities having jurisdiction to inspect and test each temporary utility before use. Obtain required certifications and permits.

1.05 PROJECT CONDITIONS:

A. Temporary Utilities: Prepare a schedule indicating dates for implementation and termination of each temporary utility. At the earliest feasible time, when acceptable to Owner, change over from use of temporary service to use of the permanent service.

B. Conditions of Use: Keep temporary services and facilities clean and neat in appearance. Operate in a safe and efficient manner. Take necessary fire prevention measures. Do not overload facilities or permit them to interfere with progress. Do not allow hazardous, dangerous, unsanitary conditions, or public nuisances to develop or persist on the Site.

PART 2 - PRODUCTS

2.01 MATERIALS AND EQUIPMENT:

A. Provide new materials and equipment. Provide materials and equipment suitable for the use intended, of capacity for required usage, and meeting applicable codes and standards. Comply with requirements of the TECHNICAL SPECIFICATIONS.

B. Water: Provide potable water approved by local health authorities.

C. Water Hoses: Provide 3/4-inch (19-mm), heavy-duty, abrasion-resistant, flexible rubber hoses 100 feet (30 m) long, with pressure rating greater than the maximum

SECTION 01560 – TEMPORARY UTILITIES AND FACILITIES (continued)

pressure of the water distribution system. Provide adjustable shutoff nozzles at hose discharge.

D. Electrical Outlets: Provide properly configured, NEMA-polarized outlets to prevent insertion of 110- to 120V plugs into higher voltage outlets. Provide receptacle outlets equipped with ground-fault circuit interrupters, reset button, and pilot light for connection of power tools and equipment.

E. Electrical Power Cords: Provide grounded extension cords. Use hard-service cords where exposed to abrasion and traffic. Provide waterproof connectors to connect separate lengths of electric cords if single lengths will not reach areas where construction activities are in progress. Do not exceed safe length-voltage ratio.

F. Lamps and Light Fixtures: Provide general service incandescent lamps of wattage required for adequate illumination. Provide guard cages or tempered-glass enclosures where exposed to breakage. Provide exterior fixtures where exposed to moisture.

G. Heating Units: Provide temporary heating units that have been tested and labeled by UL, FM, or another recognized trade association related to the type of fuel being consumed.

H. Fire Extinguishers: Provide hand-carried, portable, UL-rated, Class A fire extinguishers for temporary offices and similar spaces. In other locations, provide hand-carried, portable, UL-rated, Class ABC, dry-chemical extinguishers or a combination of extinguishers of NFPA-recommended classes for the exposures. Comply with NFPA 10 and NFPA 241 for classification, extinguishing agent, and size required by location and class of fire exposure.

PART 3 - EXECUTION

3.01 TEMPORARY UTILITIES:

A. General:

1. Engage the appropriate local utility company to install temporary service or connect to existing service. Where utility company provides only part of the service, provide the remainder with matching, compatible materials and equipment. Comply with utility company recommendations.

2. Provide adequate utility capacity at each stage of construction. Prior to availability of temporary utilities at the site, provide trucked-in services as required for start-up of construction operations.

3. Obtain and pay for temporary easements required to bring temporary utilities to the Project Site, where the Owner's permanent easement cannot be used for that purpose.

4. Furnish, install, and maintain temporary utilities required for adequate construction, safety, and security. Modify, relocate, and extend systems as Work progresses. Repair damage caused by installation or use of temporary

SECTION 01560 – TEMPORARY UTILITIES AND FACILITIES (continued)

facilities. Grade the areas of Site affected by temporary installations to required elevations and grades, and clean the area. Remove on completion of Work or until service or facilities are no longer needed or are replaced by authorized use of completed permanent facilities.

5. The types of temporary construction utilities and facilities required include, but not by way of limitation, water distribution, drainage, dewatering equipment, enclosure of Work, heat, ventilation, electrical power distribution, lighting, hoisting facilities, stairs, ladders, and roads.

6. Inspect and test each service before placing temporary utilities in use. Arrange for required inspections and tests by governing authorities, and obtain required certifications and permits for use.

7. Materials used for temporary service shall not be used in the permanent system unless so specified or acceptable to Engineer.

3.02 TEMPORARY ELECTRICITY AND LIGHTING:

A. New Service:

1. Arrange with utility company and provide service required for power and lighting.

2. Connect temporary service in a manner directed by utility company officials. Provide separate meter for metering of power used by all entities authorized to be at or perform Work at the Project Site.

3. The electric service shall be of sufficient capacity and characteristics for the various construction tools, machinery, lights, heating and air conditioning, pumps, and other tools required by Contractor and his Subcontractors.

4. Provide weatherproof, grounded, power distribution system sufficient to accommodate construction operations requiring power, use of power tools, electrical heating, and lighting. Provide overload protection. Locate multiple outlets spaced so that entire area of construction can be reached by power tools on a single extension cord of 100-foot maximum length. Supply power for electric welding, if any, from either temporary power distribution system or by engine-driven, power-generator sets at Contractor’s option.

5. Provide all necessary temporary wiring, panelboards, switches, outlets, and other devices so that power and lighting is available throughout the construction area. Include meters, transformers, overload protection disconnects, automatic ground fault interrupters, and main distribution switch gear. Include overcurrent protection on all conductors of the temporary system.

SECTION 01560 – TEMPORARY UTILITIES AND FACILITIES (continued)

6. Provide adequate artificial lighting for all areas of Work when natural light is not adequate for Work.

    a. Sufficient light shall be provided for general construction areas and floor areas, with additional sufficient lighting for specific tasks and to meet safety requirements.

B. Use of Existing System:

1. Owner's existing system shall not be used for temporary electricity.

C. Use of Permanent System:

1. Prior to use of permanent system (facilities being constructed by Contractor) for construction purposes, obtain written permission of Owner.

2. Maintain permanent system as specified for temporary facilities.

D. Costs of Installation and Operation:

1. Pay fees and charges for permits and applications.

2. Pay costs of installation, maintenance, removal of temporary services, and restoration of any permanent facilities used.

3. Pay costs of electrical power used.

4. Obtain and pay costs for temporary easements required across properties other than that of Owner.

3.03 TEMPORARY WATER:

A. New Service:

1. Arrange with utility service company to provide water for construction purposes.

2. Connect service to water main in a manner directed by utility company officials. Provide with meter and shut off valve near connection to the water main.

3. Size water service to provide adequate volume for all anticipated construction uses, and to maintain minimum required pressure.

4. Install piping with outlets located so that water is available throughout the construction area.

5. Prevent freezing of water distribution system. Maintain hose connections and outlet valves in leakproof condition.

6. Sterilize temporary water piping prior to use.

SECTION 01560 – TEMPORARY UTILITIES AND FACILITIES (continued)

B. Use of Existing System:

1. Owner's existing system may be used for temporary water.

2. Make connections to existing facilities to provide water for construction purposes.

a. Water Source: Make connections to Owner's service located at point indicated or where instructed by Owner.

3. Modify, supplement, and extend system as necessary to meet temporary water requirements and prevent overloading of existing system.

4. Regulate system to prevent interference with Owner's usage.

C. Use of Permanent System:

1. Prior to use of permanent system for construction purposes, obtain written permission of Owner.

2. Prior to Use of System for Drinking Water:

a. Disinfect piping.

b. Obtain inspection and approval of governing authority.

D. Costs of Installation and Operation:

1. Pay all costs for installation, maintenance, and removal.

2. Pay all costs for water used.

3.04 TEMPORARY SANITARY FACILITIES:

A. Contractor-Furnished Facilities:

1. Furnish, install, and maintain temporary sanitary facilities for use through construction period. Remove on completion of Work.

2. Provide for all construction workers under this Contract and representatives at the Site.

3. Toilet facilities shall be of the chemical, aerated recirculation, or combustion type, properly vented, and fully enclosed with a glass- fiber-reinforced polyester shell or similar nonabsorbent material.

4. Water and sewer connected facilities may be installed to extent permitted by governing regulations.

a. Provide lavatories, mirrors, urinals (where applicable), and water closets in water and sewer connected units. Provide only potable water at lavatories. Provide individual compartments for water closets where the unit is intended for occupancy by more than one person. Provide

SECTION 01560 – TEMPORARY UTILITIES AND FACILITIES (continued)

suitable enclosure with nonabsorbent sanitary finish materials and adequate heat, ventilation and lighting.

b. Provide separate toilet facilities for male and female construction personnel as required.

5. Wash Facilities: Install potable water-supplied wash facilities at locations convenient to construction personnel involved in the handling of compounds and materials where wash-up is necessary to maintain a safe, healthy and sanitary condition. Where recommended or required by governing authorities and regulations or recognized standards provide emergency safety showers, emergency eye-wash fountains, showers, and similar facilities. Dispose of drainage properly. Supply soap and other cleaning compounds appropriate for each condition.

6. Drinking Water Fixtures: Provide containerized tap-dispenser type drinking water units. Provide drinking water fountains if piped potable water is reasonably accessible from permanent or temporary lines.

7. Supply and maintain toilet tissue, paper towels, paper cups and similar disposable materials as appropriate for each facility. Provide appropriate covered waste containers for used material.

B. Use of Existing Facilities:

1. Not applicable.

3.05 SEWERS AND DRAINAGE:

A. General: Where sewers or drainage facilities are not available for discharge of effluent, provide containers to remove and dispose of effluent off the Site in a lawful manner. If existing sewers are available for temporary drainage near the Site prior to completion of permanent sewers, provide temporary connections to remove effluent that can be lawfully discharged into the sewers. If existing sewers cannot be used for discharge, provide drainage ditches, dry wells, waste stabilization ponds, and similar discharge facilities to remove effluent that can be lawfully discharged in that manner.

B. Connect temporary sewers to the municipal sewer systems in the manner directed by the sewer department officials.

C. Maintain temporary sewers and drainage facilities in a clean, sanitary condition. Following heavy usage, restore to normal conditions promptly. Provide and maintain temporary earthen embankments and similar barriers in and around construction excavations and subgrade construction, sufficient to prevent flooding by runoff of storm water from heavy rain storms.

SECTION 01560 – TEMPORARY UTILITIES AND FACILITIES (continued)

3.06 TEMPORARY CONSTRUCTION AIDS:

A. General:

1. Provide construction aids and equipment required by personnel and to facilitate the execution of the Work; scaffolds, staging, ladders, stairs, ramps, runways, platforms, railings, hoists, cranes, chutes, and other such facilities and equipment.

2. Materials may be new or used, must be suitable for the intended purpose, and meet the requirements of applicable codes, regulations, and standards.

3. When permanent stair framing is in place, provide temporary treads, platforms, and railings for use by construction personnel.

3.07 TEMPORARY SAFETY AND HEALTH:

A. General: Contractor shall be responsible for development of safety and health programs for personnel at Project Site as specified in the GENERAL CONDITIONS.

3.08 TEMPORARY FIRE PROTECTION:

A. General:

1. Contractor shall be responsible for development of a fire prevention and protection program for all Work under this Contract.

2. The program shall comply with the applicable provisions for safety and protection as set forth in the GENERAL CONDITIONS and with applicable parts of the NFPA 10 and 241.

3. Locate fire extinguishers where convenient and effective for their intended purpose, but not less than one extinguisher on each floor at or near such usable stairwell.

4. Store combustible materials in containers in fire-safe locations.

5. Maintain unobstructed access to fire extinguishers, fire hydrants, temporary fire protection facilities, stairways, and other access routes for fighting fires. Prohibit smoking in hazardous fire exposure areas.

6. Provide supervision of welding operations and similar sources of fire ignition.

7. Post warning and instructions at each extinguisher location, and instruct construction personnel on proper use of extinguishers and other available facilities at Project Site. Post local fire department telephone number on or near each telephone instrument at Project Site.

SECTION 01560 – TEMPORARY UTILITIES AND FACILITIES (continued)

B. Permanent Fire Protection:

1. Complete each fire protection facility at earliest reasonable date, place into operation, and make ready for emergency use.

2. Instruct personnel at Site on availability and proper use.

3.09 INSTALLATION AND REMOVAL:

A. Relocation: Relocate construction aids as required by progress of construction, storage limitations, or Work requirements and to accommodate requirements of Owner and other contractors at the Site.

B. Removal: Remove temporary materials, equipment, and services when construction needs can be met and allowed by use of permanent construction, or at completion of the Project.

C. Repair: Clean and repair damage caused by installation or by use of temporary facilities.

1. Remove foundations and underground installations for construction aids.

2. Grade the areas of the Site affected by temporary installations to required elevations and clean the area.

END OF SECTION 01560

SECTION 01560 – TEMPORARY UTILITIES AND FACILITIES (continued)

THIS PAGE INTENTIONALLY LEFT BLANK

SECTION 02003 – TRENCH SAFETY/PROTECTIVE SYSTEMS

PART 1 - GENERAL

1.01 WORK INCLUDED

A. Comply with OSHA (Occupational Safety and Health Administration) Standards 29 CFR 1926 Safety and Health Regulations for Construction Subpart P, Excavations, Standard 1926.650, of the Code of Federal Regulations and as follows.

B. The Contractor is responsible for ensuring that safe working conditions exist and safety procedures are being followed at the work site. The Contractor is responsible to comply with all Federal, State and City laws, rules or regulations stated or not stated within these specifications.

C. If the Contractor is working for any Arkansas public body (state agency, county, municipality, school district, or other local tax unit or improvement district), and has entered into a contact under the provisions of Arkansas Code Title 22. Public Property §§ 22-9-202-204, then the engineer and the contractor shall comply with Arkansas Code Title 22. Public Property § 22-9-212 Public improvements generally - Trench or excavation safety systems.

The requirements include, but are not necessarily limited to:

22-9-212. Public improvements generally -- Trench or excavation safety systems.

a. Whenever any agency of this state or of any county, municipality, or school district, or other local taxing unit or improvement district, enters into a contract covered by the provisions of 22-9-202 -- 22-9-204 for the making of repairs or alterations or the erection of buildings or for the making of any other improvements, or for the construction or improvement of highways, roads, streets, sidewalks, curbs, gutters, drainage or sewer projects, or for any other construction project in which the public work or public improvement construction project involves any trench or excavation which equals or exceeds five feet (5') in depth, the agency, county, municipality, school district, local taxing unit, or improvement district shall require:

(1) That the current edition of Occupational Safety and Health Administration Standard for Excavation and Trenches Safety System, 29 CFR 1926, Subpart P, be specifically incorporated into the specifications for the project; and

(2) That the contract bid form include a separate pay item for trench or excavation safety systems to be included in the base bid.

b. In the event a contractor fails to complete a separate pay item in accordance with the applicable provisions of subsection (a) of this section, the agency, county, municipality, school district, local taxing unit, or improvement district shall declare that the bid fails to comply fully with the provisions of the specifications and bid documents and will be considered invalid as a nonresponsive bid. The

SECTION 02003 – TRENCH SAFETY/PROTECTIVE SYSTEMS (continued)

owners of the above-stated project shall notify the Safety Division of the Department of Labor of the award of a contract covered by this section.

The contractor is responsible for compliance with the latest version of this Code (Arkansas Code Title 22. Public Property § 22-9-212 Public improvements generally - Trench or excavation safety systems).

D. Protective Systems - The Contractor shall design or provide an engineered design, and shall install, and maintain Protective Systems in strict compliance with OSHA (Occupational Safety and Health Administration) Standards 29 CFR 1926 – Construction, of the Code of Federal Regulations and all other applicable Federal, State, and local requirements.

1.02 29 CFR 1926, SUBPART P, INCORPORATED

A. The current edition of Occupational Safety and Health Administration Standard for Excavation and Trenches Safety System, 29 CFR 1926, Subpart P, is incorporated by reference into these Standard specifications.

B. Additional information may be found at:

United states Department of Labor, Occupational Safety and Health Administration, Regulations (Standards – 29 CFR) Construction Standard Number 1926 – Safety and Health Regulations for Construction.

https://www.osha.gov/pls/oshaweb/owasrch.search_form?p_doc_type=STANDARDS&p_toc_level=1&p_keyvalue=1926

Trenching and Excavation Safety OSHA 2226-10R 2015 Booklet at:

https://www.osha.gov/Publications/osha2226.pdf

1.03 MEASUREMENT AND PAYMENT

A. Measurement and Payment for the work included in this section will be in accordance with the prices set forth in the Unit Price Bid Schedule for the quantity of work performed and accepted and as specified elsewhere within the Contract Documents.

END OF SECTION 02003

SECTION 02004 – CONFINED SPACES

PART 1 - GENERAL

1.01 GENERAL

A. Comply with OSHA (Occupational Safety and Health Administration) Standards 29 CFR 1910 Occupational Safety and Health Standards including Subpart J, General Environmental Controls Excavations, Standard 1910, including but not limited to 29 CFR 1910.146, Permit-required Confined Spaces of the Code of Federal Regulations and as follows.

B. The Contractor is responsible for ensuring that safe working conditions exist and safety procedures are being followed at the work site. The Contractor is responsible to comply with all Federal, State and City laws, rules or regulations stated or not stated within these specifications. The Contractor is responsible to notify OSHA of the commencement of all construction.

C. The Contractor is responsible to notify the Utilities Director, and the Engineer, when personnel are to work in, or near, a Permit-Required Confined Space and contractor shall coordinate such work with the Utilities Director, and the Engineer.

D. Contractor shall inform the Utilities Director, and the Engineer, of type of Permit-Required Confined Space documentation, permit and program used by the contractor.

E. Contractor shall inform the Utilities Director, and the Engineer, of any hazards confronted or created in a Permit-Required Confined Space.

F. The Contractor is responsible to notify the Utilities Director, and the Engineer, when personnel are to work in, or near, a Non-Permit-Required Confined Space and contractor shall coordinate such work with the Utilities Director and the Engineer.

G. Contractor shall inform the Utilities Director, and the Engineer, of type of Non-Permit-Required Confined Space documentation and program used by the contractor.

H. Contractor shall inform the Utilities Director, and the Engineer, of any hazards confronted or created in a Non-Permit-Required Confined Space.

END OF SECTION 02004

SECTION 02004 – CONFINED SPACES (continued)

THIS PAGE INTENTIONALLY LEFT BLANK

SECTION 02005 – PUBLIC EMPLOYEES RIGHT TO KNOW ACT

PART 1 - GENERAL

1.01 WORK INCLUDED

A. Comply with OSHA (Occupational Safety and Health Administration) Standards 29 CFR 1910 Occupational Safety and Health Standards including Subpart H, Hazardous Materials, Standard 1910.120, of the Code of Federal Regulations and as follows.

B. Comply with State of Arkansas Act 556 of 1991, Arkansas Code Ann. Sec 8-7-1101 et. Seq.: Public Employees Chemical Right to Know Act, and as follows.

C. The Contractor is responsible for ensuring that safe working conditions exist and safety procedures are being followed at the work site. The Contractor is responsible to comply with all Federal, State and City laws, rules or regulations stated or not stated within these specifications.

D. The Contractor shall provide to the Utilities Director, and the Engineer, a list of all hazardous chemicals and a copy of the appropriate Safety Date Sheets (SDS) (previously aka Material Safety Data Sheets) brought onto the property. This information is required prior to any work being started.

E. The City will provide to the contractor a list of hazardous chemicals at any City facility where work is being performed. The locations and SDS information will be provided prior to any work starting. The contractor is responsible for disseminating this information to its employees.

END OF SECTION 02005

SECTION 02005 – PUBLIC EMPLOYEES RIGHT TO KNOW ACT (continued)

THIS PAGE INTENTIONALLY LEFT BLANK

TECHNICAL SPECIFICATIONS

SECTION 01010

SPECIAL CONDITIONS

PART 1 – GENERAL

1.01 COST OF WATER

A. The cost of any water required for construction, cleaning, testing, or disinfection shall be the responsibility of the Contractor charged at the rate of $3.47 per 1,000-gallons plus a meter charge of $49.47 per month. Rates are subject to change, Contractor shall contact the City of Fayetteville's Meter Department for more information.

1.02 AMERICAN MADE MATERIALS

A. Unless specified otherwise, all materials shall be 100% United States of America domestic products. Exceptions shall be made for specifically named products listed on the Plans and in the Specifications. The Contractor shall provide material certifications listing the country of origin and/or manufacture for all material, pipe, fittings, castings, products, concrete, reinforcement, and appurtenances.

1.03 BUILDING PERMITS

A. The City of Fayetteville requires all buildings constructed for their use to be permitted and inspected by the City of Fayetteville Building Safety Division and constructed in accordance with current City of Fayetteville Building Codes. As stated in Section 00700, General Conditions, all fees except for state mandated craft fees for City of Fayetteville issued permits will be waived.

END OF SECTION 01010

THIS PAGE INTENTIONALLY LEFT BLANK

SECTION 01111

SITE CONDITIONS

PART 1 GENERAL

1.01 SCOPE OF WORK

A. In general, follow the guidelines below when dealing with existing conditions on or adjacent to the site. These guidelines are not intended to restrict or replace professional judgment by the Contractor.

1.02 RELATED SECTIONS

A. Section 00800 – Supplementary Conditions

B. Section 01110 – Summary of Work

C. Section 02100 – Site Preparation

1.03 SITE CONDITIONS

A. Site Information

1. The Contractor is advised that the pre-purchased medium voltage switchgear and associated controls is scheduled for delivery in November 2026. The Contractor shall be responsible for offloading and installing the pre-purchased equipment and shall have the proposed building weather tight by the time the equipment arrives. Should the building not be ready to house the equipment and protect it from the weather, the Contractor shall provide secure, weathertight storage until the building is ready. Should delivery of the equipment be delayed by the supplier beyond November 15th, the Contractor shall be entitled to additional Contract Time for the time between November 15th and the date of delivery.

2. Confine all activities to public rights-of-way or to the Owner's property unless specific authorization is granted to use other properties.

3. Do not close streets or driveways overnight without written permission from the local municipality. Obtain a street closure permit prior to commencing work.

B. Subsurface Information

1. Subsurface information is not available.

C. Site Investigation and Representation

1. The Contractor acknowledges that he has satisfied himself as to the nature and location of the Work; the general and local conditions, particularly those bearing upon availability of transportation, disposal, handling and storage of materials, availability of labor, water, electric power, roads, and uncertainties of weather, river/stream stages, or similar physical

SECTION 01111– SITE CONDITIONS (continued)

conditions at the site; the conformation and conditions of the ground; the character of equipment and facilities needed preliminary to and during the prosecution of the Work and all other matters which can in any way affect the Work or the cost thereof under this Contract.

2. The Contractor further acknowledges that he has satisfied himself as to the character, quality, and quantity of surface and subsurface materials to be encountered from inspecting the site and from evaluating any information on subsurface and physical conditions provided by the Owner. Any failure by the Contractor to acquaint himself with all the available information will not relieve him of responsibility for properly estimating the difficulty or cost of successfully performing the Work. Neither the Owner nor the Engineer assumes responsibility for any conclusion or interpretation made by the Contractor based on the information made available by the Owner or the Engineer.

3. The Contractor shall be responsible for the notification of utility location services, including Arkansas 811 and other utility location services not specifically listed, sufficiently in advance of excavation activities to allow for the field location of any underground utilities and structures. The Arkansas 811 telephone number is 1-800-482-8998. A minimum of 48 hours prior notification is required.

D. Responsibility for Utility Properties and Service

1. The Drawings show known utilities and structures adjacent to or to be encountered in the Work. The locations shown are taken from existing records and the best information available from existing plans; however, it is expected that there may be some discrepancies and omissions in the locations and quantities of utilities and structures shown. This information is shown only for the Contractor's convenience, and neither the Owner nor the Engineer assumes any responsibility as to its accuracy or completeness. The Contractor shall make every effort to locate all underground utilities and structures by prospecting in advance of excavation activities.

2. Neither the Owner nor his officers or agents shall be responsible for damages as a result of the Contractor's failure to protect utilities encountered in the Work.

3. Provide unobstructed access to fire hydrants, underground conduit, manholes, and water or gas valve boxes.

4. Where the Contractor's operations are adjacent to existing utilities and services; and when operations could cause damage that would result in considerable loss, expense, and inconvenience; then the Contractor shall not commence the Work until making necessary arrangements for their protection. These utilities and service shall include but not be limited to railway, fiber optic, telephone, television, power, oil, gas, water, sanitary sewer, storm drain, irrigation, or other systems.

5. Notify all utility offices that are affected by the construction operation at least fifteen (15) days in advance of commencing construction operations. Do not expose any utility without first obtaining permission from the affected agency. Once permission has been granted, locate and if necessary, expose and provide temporary support for all existing underground utilities in advance of operations.

SECTION 01111– SITE CONDITIONS (continued)

6. The Contractor shall be solely and directly responsible to the owners and operators of such utility properties for any damage, injury, expense, loss, inconvenience, delay, suits, actions, or claims of any character brought because of any injuries or damage that may result from the construction operations under this Contract.

7. In the event of interruption to domestic water, sanitary sewer, storm drain, or other utility services because of accidental breakage due to construction operations, the Contractor shall promptly notify the proper authority, cooperate with said authority in restoration of service as promptly as possible, and bear all costs of repair. In no event shall interruption of any public or franchised utility service be allowed unless the owner of the utility grants prior approval.

8. Replace at Contractor's expenses any existing utilities or structures removed or damaged during construction unless the Contract Documents indicate otherwise.

9. Where existing utility lines or structures are so located as to physically conflict with permanent structures to be constructed under this Contract, the conflicting utility line or structure shall be permanently relocated. Such relocations shall be considered as required by this Contract.

10. Give immediate notice to the Engineer, the Owner, and the owner of the utility (where applicable) when a physical conflict or interference is determined to exist; and then obtain approval to relocate such utility or to discontinue service therein from the Engineer and the owner of the utility. The owner of the utility shall have the right to do all work required to discontinue, relocate, and replace interfering utilities and charge the Contractor for all costs thereof. When approved by the Engineer and the owner of the utility, all work required to discontinue, relocate, and replace interfering utilities may be done by the Contractor. All such discontinuance, relocation, and replacement shall be accomplished in accordance with all requirements of the owner of the utility.

11. When notified by the Contractor that an interference or conflict has been determined to exist, the Engineer will determine whether such interference shall be considered as required by construction or as incidental to construction.

12. Where existing utility lines or structures are so located as to interfere with the Contractor's prosecution of the Work, but do not physically conflict with permanent structures to be constructed under this Contract; then any modification, alteration, or relocation of interfering utility, either permanent or temporary, shall be accomplished at the expense of the Contractor.

E. Interfering Structures

1. Take necessary precautions to prevent damage to existing structures whether on the surface, aboveground, or underground. An attempt has been made to show major structures on the Drawings. While the information has been compiled from the best available sources, its

SECTION 01111– SITE CONDITIONS (continued)

completeness and accuracy cannot be guaranteed, and it is presented as a guide to avoid known possible difficulties.

2. Protect existing structures from damage whether or not they lie within the right-of-way, or the limits of the easements obtained by the Owner. Where existing structures must be removed to conduct the Work properly, or are damaged during the Work, they shall be restored at the Contractor's own expense to at least their original condition and to the satisfaction of the Engineer.

3. The Contractor may, with the approval of the Engineer and without additional compensation, remove and replace in a condition as good as or better than original, any small interfering structures such as fences and signposts that interfere with the Contractor's operations.

F. Field Relocation

1. During the progress of the Work, minor relocations of the Work may be necessary that do not require changes in the Contract time or price. Make such relocations only at the direction of the Engineer (by Field Order). If existing structures are encountered that will prevent construction as shown, notify the Engineer before continuing with the Work in order that the Engineer may make such field revisions as necessary to avoid conflict with the existing structures. If the Contractor fails to notify the Engineer when an existing structure is encountered and proceeds with the Work despite this interference, the Contractor shall be responsible for any damage that may occur.

G. Land Monuments

1. Preserve or replace any existing federal, state, county, city, or private land monuments encountered. A Professional Land Surveyor, licensed in the state where the project is located, shall replace damaged or missing monuments at the Contractor's expense.

1.04 PAYMENT PROCEDURES

A. The Work specified in this Section shall be considered incidental and payment will be included as part of the appropriate lump sum or unit price bid items in the Bid Form.

PART 2 PRODUCTS (NOT USED)

PART 3 EXECUTION (NOT USED)

END OF SECTION

SECTION 01300

SUBMITTALS

PART 1 GENERAL

1.01 SCOPE OF WORK

A. This Section specifies the general methods and requirements of submissions applicable to Shop Drawings, Materials and Product Data, Test Results, Samples, Permits, and Construction or Submittal Schedules. Additional general submission requirements are contained in the General Conditions. Detailed submittal requirements are specified in the individual technical specification sections.

B. Clearly identify all submittals by reference to Section Number, Paragraph, Drawing Number or Detail as applicable. Submittals shall be clear and legible and of sufficient size for presentation of data.

C. In general, the Contractor may submit project materials and equipment submittals, testing results, regulatory permits, warranties and bonds, and other documentation as electronic files in Portable Document Format (PDF). When requested by the Engineer, the Contractor shall provide paper copies of submittals or other documents in addition to or in lieu of the electronic copies.

1.02 SCHEDULING

A. Coordination of Submittal Times: Prepare and transmit each submittal sufficiently in advance of performing the related work or other applicable activities, or within the time specified for the associated work of other related Sections. The Work shall not be delayed by processing times and issues involving the following: disapproval and resubmittal (if required); coordination with other submittals; or for testing, purchasing, fabrication, delivery, and similar sequenced activities. No extension of time will be authorized because of the Contractor's failure to transmit submittals sufficiently in advance of the Work.

PART 2 PRODUCTS

2.01 SHOP DRAWINGS, MATERIALS AND PRODUCT DATA, SAMPLES

A. Shop Drawings

1. Shop drawings as specified in individual Sections include the following: custom-prepared data such as fabrication and erection or installation drawings, scheduled information, setting diagrams, actual shop work manufacturing instructions, custom templates, special wiring diagrams, coordination drawings, individual system or equipment inspection reports, and test reports including performance curves and certifications.

2. All shop drawings submitted by subcontractors shall be sent directly to the Contractor for checking. The Contractor shall be responsible for their submission at the proper time so as to prevent delays in delivery of materials.

3. Check all subcontractor's shop drawings regarding measurements, size of members, materials, and details to make sure that they conform to the intent of the Drawings and related Sections. Return shop drawings found to be inaccurate or otherwise in error to the subcontractors for correction before submission to the Engineer.

4. All details on shop drawings shall clearly show the relation of the various parts to the main members and lines of the structure; and where correct fabrication of the work depends upon field measurements, such measurements shall be made and noted on the drawings before being submitted.

5. When requested by the Engineer, submittals for equipment specified under Division 16 shall include a listing of all installations where identical or similar equipment has been installed and been in operation for a period of at least one (1) year.

B. Materials and Product Data

1. Submit material data in accordance with the individual specification sections. When required, furnish test data to indicate material and installation compliance with the appropriate specification or standard. Materials requiring certification include, but are not limited to the following: select material, topsoil, sand, rock, crushed stone, concrete, grout, slurry, metals, etc. Compliance or certification statements may include manufacturer's printed statements of compliance and applicability; production or quality control inspection/test reports; certifications; mill reports; and long and short-term storage instructions.

2. Submit product data in accordance with the individual specification sections. Product data shall include, but not be limited to the following: standard prepared manufacturer’s product data (sometimes referred to as catalog data or cut sheets); manufacturer's product specification and installation instructions; availability of colors, patterns and materials; manufacturer's printed statements of compliances and applicability; roughing-in diagrams and templates; product photographs; standard wiring diagrams; printed performance curves and operational-range diagrams; production or quality control inspection and test reports and certifications; mill reports; product operating and maintenance instructions; long and short term storage instructions; recommended spare parts listings; and printed product warranty documentation.

3. In addition to the list of recommended spare parts, submit a separate list of spare parts that will be provided by the manufacturer with the equipment, as required by the individual equipment specifications. During the startup of the equipment, the manufacturer’s representative, in coordination with the Contractor, shall verify that all required spare parts have been delivered to the project site and are in satisfactory condition for use by the Owner. At Final Completion, compile two (2) copies of each required (delivered) spare parts list and deliver such to the Owner. Organize the spare parts lists into an orderly sequence based on the table of contents of the Project Manual and include the number of parts delivered and the part number of each.

C. Samples

1. Samples specified in individual specification sections shall be provided which give the Engineer a representation of the material textures, quality, color, and properties to be supplied for the project. Other sample requirements include the following: physical examples of the work such as sections of manufactured or fabricated work, small cuts or containers of materials, complete units of repetitively-used products, color/texture/pattern swatches and range sets, specimens for coordination of visual effect, graphic symbols, and units of work to be used by the Engineer or Owner for independent inspection and testing.

2.02 PERMITS

A. Construction and Environmental Permits

1. Submit permits in accordance with the contract documents or the individual technical specification sections included herein. When required, furnish copies of permits from governmental agencies for the following: demolition permits, street closure and crossing permits, highway and railroad permits, environmental permits, building permits, grading permits, blasting permits, and safety permits.

2.03 CONSTRUCTION SCHEDULE

A. Prior to the commencement of construction, submit for the Engineer's approval a Construction Schedule detailing the orderly and successful completion of the Work within allotted Contract time. Coordinate and schedule suppliers such that products are manufactured and delivered to the construction site so that work can be constructed within the time allotted. Unless otherwise approved by the Engineer, the Contractor's Schedule shall include a computer-generated printout of the Critical Path Network. The Schedule shall account for all work by the Contractor and associated or concurrent subcontract work. In addition to all reasonably important construction activities, the Schedule shall provide for the proper sequence of construction considering the various crafts, purchasing time, submittal approval, material delivery, equipment fabrication, and similar time-consuming factors.

B. The Schedule shall include as a minimum, the earliest starting and finish dates, latest starting and finish dates, and the total float for each task or item. Monitor and update the Schedule at least monthly and submit the Critical Path Network printout to the Engineer at the same time the pay estimate is prepared. The Schedule shall contain all the items of the Periodic Estimate and Pay Schedule.

C. The monthly Schedule update shall include the following items:

1. Identify activities that are completed or in process and show the percentage progress status of each activity. The percentage progress status will be used to support each Contractor's periodic pay estimate.

2. Identify restraints imposed by material deliveries, precedent activity durations or schedule adjustments on the monthly update of the Network.

3. Show actual start and completion dates.

D. Supplemental to the Critical Path Schedule, prepare and submit a detailed work schedule, projected at least a month in advance. The implementation of the work schedule and the coordination required will constitute the basic agenda of all coordination and planning meetings called by the Engineer.

2.04 PROFESSIONAL ENGINEER (P.E.) CERTIFICATION FORM

A. If specifically required in other related Sections, submit a State of Arkansas P.E. Certification for each item required, in the form attached to this Section, completely filled in and stamped.

PART 3 EXECUTION

3.01 CONTRACTOR'S RESPONSIBILITIES

A. Review shop drawings, product data and samples, including those by subcontractors, prior to submission to determine and verify the following:

1. Conformance of materials and equipment with related Sections,

2. Equipment (or field) measurements,

3. Equipment (or field) construction criteria,

4. Catalog numbers and similar data.

3.02 SUBMISSION REQUIREMENTS

A. Make submittals promptly in accordance with approved schedule and in such sequence as to cause no delay in the Work or in the work of any other subcontractor.

B. Each submittal, appropriately coded, will be returned within twenty (20) business days following receipt of submittal by the Engineer.

C. Number of submittals required:

1. Electronic Copies: Provide one (1) electronic copy (PDF file) of each shop drawing, structural drawing, and material or product data sheet to the Engineer. Include Contractor’s submittal cover sheet and certification statement as the first page of the electronic copy.

2. When requested by the Engineer, provide four (4) paper copies of shop drawings, structural drawings, material and product data sheets, operation and maintenance (O&M) manuals (bound), and other project closeout documents.

3. When requested by the Structural Engineer, provide one (1) reproducible quality copy of structural drawings.

4. Samples: Submit the number stated in the respective Sections.

D. Submittals shall contain:

1. The dates of receipt by the Contractor and submission to the Engineer, and the dates of any previous submissions,

2. The Project title and number,

3. Contractor identification,

4. The names of the Contractor, Supplier and Manufacturer,

5. Identification of the product, with the section number, page, and paragraph(s),

6. Equipment (or field) dimensions, clearly identified as such,

7. Relation to adjacent or critical features of the work or materials,

8. Applicable standards, such as ASTM or Federal Standards numbers,

9. Identification of deviations from Contract Documents,

10. Identification of revisions on resubmittals,

11. A 4-inch by 8-inch (4" x 8") blank space for Contractor and Engineer stamps,

12. Where calculations are required to be submitted by the Contractor, the calculations shall have been checked by a qualified individual. The submitted calculations shall clearly show the names of the preparer and of the checker.

E. Affix the following Certification Statement to each submittal, along with the Contractor's Company name and signature of the Contractor:

1. "Certification Statement: By this submittal, I hereby represent that I have determined and verified all equipment (or field) measurements, equipment (or field) construction criteria, materials, dimensions, catalog numbers and similar data, and I have checked and coordinated each item with other applicable approved shop drawings and all Contract requirements."

F. When the Engineer requests paper copies, shop drawings and product data sheets, 11-inch by 17-inch (11"x 17") and smaller, shall be bound together in an orderly fashion by specification section and bear the above Certification Statement on the cover sheet. The cover sheet shall fully describe the packaged data and include a listing of all items within the package. When requested by the Engineer, provide an additional hard copy of each shop drawing, and equipment or product data sheet, and an additional sample to the Resident Project Representative.

G. Utilize a 10-character submittal identification numbering system in the following manner:

1. The first character shall be a D, S, P or M: which represents Shop/Working Drawing and other Product Data (D), Sample (S), Preliminary Submittal (P) or Operating/ Maintenance Manual (M).

2. The next five (5) digits shall be the applicable specification Section Number.

3. The next three (3) digits shall be the numbers 001 to 999, which shall sequentially number each initial separate item or drawing submitted under each specific Section Number.

4. The last character shall be a letter, A to Z, indicating the submission, or resubmission of the same Drawing, i.e., A = 1st submission, B = 2nd submission, C = 3rd submission, etc. An example of a typical submittal number would be as follows, with the corresponding code identifiers:

D-03300-008-B

D ..... Shop Drawing
03300..... Specification Section for Concrete
008..... The eighth submittal under this section
B..... The second submission (first resubmission) of that particular shop drawing

H. Notify the Engineer in writing, at the time of submittal, of any deviations in the submittals from the requirements of the Contract Documents.

I. The review and approval of shop drawings, samples or product data by the Engineer shall not relieve the Contractor from the responsibility of fulfilling the terms of the Contract. All risks of error and omission are assumed by the Contractor, and the Engineer will have no responsibility, therefore.

J. No portion of the work requiring a shop drawing, sample, or product data shall be started nor shall any materials be fabricated prior to the approval or qualified approval of such item. Fabrication performed or materials purchased that do not conform to approved shop drawings and data shall be at the Contractor's risk. The Owner will not be liable for any expense or delay due to corrections or remedies required to accomplish conformity.

K. Project work, materials, and fabrication shall conform to approved shop drawings, applicable samples, and product data.

3.03 REVIEW OF SHOP DRAWINGS, PRODUCT DATA, WORKING DRAWINGS AND SAMPLES

A. The review of shop drawings, data and samples will be for general conformance with the design concept and Contract Documents. They shall not be construed:

1. As permitting any departure from the Contract requirements,

2. As relieving the Contractor of responsibility for any errors, including details, dimensions, and materials,

3. As approving departures from details furnished by the Engineer, except as otherwise provided herein.

B. The Contractor remains responsible for details and accuracy, for coordinating the work with all other associated work and trades, for selecting fabrication processes, for techniques of assembly, and for performing work in a safe manner.

C. If the shop drawings, data or samples as submitted describe variations and show a departure from the Contract requirements, which Engineer finds to be in the interest of the Owner and to be so minor as not to involve a change in Contract Price or Contract Time, the Engineer may return the reviewed drawings without noting an exception.

D. Submittals will be returned to the Contractor under one of the following codes:

Code 1 – "NO EXCEPTIONS NOTED" is assigned when there are no notations or comments on the submittal. When returned under this code the Contractor may release the equipment or material for procurement.

Code 2 – "COMMENTS NOTED" is assigned when a confirmation of the notations and comments is not required by the Contractor. The Contractor may release the equipment or material for procurement; however, all notations and comments must be incorporated into the final product.

Code 3 – "COMMENTS NOTED/CONFIRM" is assigned when a confirmation of the notations and comments is required by the Contractor. The Contractor may release, at his own risk, the equipment or material for procurement; however, all notations and comments must be incorporated into the final product. This confirmation shall specifically address each omission and nonconforming item that was noted. Confirmation shall be received by the Engineer within ten (10) calendar days of the date of the Engineer's transmittal requiring the confirmation.

Code 4 – "COMMENTS NOTED/RESUBMIT" is assigned when Engineer’s review notations and comments are extensive enough to require a resubmittal of the package. This resubmittal shall specifically to address all comments, omissions and non-conforming items that were noted. Resubmittal shall be received by the Engineer within fifteen (15) calendar days of the date of the Engineer's transmittal requiring the resubmittal.

Code 5 – "REJECTED/RESUBMIT" is assigned when the submittal does not meet the intent of the Contract Documents. The Contractor must resubmit the entire package revised to bring the submittal into conformance. It may be necessary to resubmit using a different manufacturer/vendor to meet the Contract Documents. At the Engineer’s request, resubmit large packages in two or more, smaller submittal packages.

Code 6 – "RECEIPT ACKNOWLEDGED" is assigned to acknowledge the receipt of a submittal that is not subject to the Engineer’s review and approval; and is being filed for informational purposes only. This code is generally used in acknowledging receipt of means and methods of construction work plan, field conformance test reports, and Health and Safety plans.

E. Resubmittals will be handled in the same manner as first submittals. On resubmittals, identify all revisions made to the submittals, either in writing on the letter of transmittal, or on the shop drawings by use of revision triangles or other similar methods. The resubmittal shall clearly respond to each comment made by the Engineer on the previous submission. Additionally, direct specific attention to any revisions made other than the corrections requested by the Engineer on previous submissions.

F. The Engineer may elect not to review partial submittals and will be the only judge as to the completeness of a submittal. Submittals not complete will be returned to the Contractor and will be considered "Rejected/Resubmit" until resubmitted. The Engineer may at his option provide a list or mark the submittal directing the Contractor to the areas that are incomplete.

G. Repetitive Review

1. Shop drawings and other submittals will be reviewed no more than twice at the Owner's expense. All subsequent reviews will be performed at times convenient to the Engineer and at the Contractor's expense, based on the Engineer's then prevailing rates. The Contractor shall reimburse the Owner for all such fees invoiced to the Owner by the Engineer. Submittals are required until approved.

2. Any need for more than one (1) resubmission, or any other delay in obtaining Engineer's review of submittals, will not entitle Contractor to extension of the Contract Time.

H. If the Contractor considers any correction indicated on the shop drawings to constitute a change to the Contract Documents, the Contractor shall give written notice thereof to the Engineer at least seven (7) working days prior to release for manufacture.

I. When the shop drawings have been completed to the satisfaction of the Engineer, the Contractor shall carry out the manufacture of products in accordance therewith and shall make no further changes therein except upon written instructions from the Engineer.

3.04 DISTRIBUTION

A. Distribute reproductions of approved shop drawings and copies of approved product data and samples, where required, to the job site file and elsewhere as directed by the Engineer.

END OF SECTION

PROFESSIONAL ENGINEER (P.E.) CERTIFICATION FORM

The undersigned hereby certifies that he/she is a professional engineer registered in the State of Arkansas and that he/she has been employed by

_____
Name of Contractor)

to design _____
(Insert P.E. Responsibilities)

in accordance with Specification Section _____

for the Noland Wastewater Treatment Plant Switchgear Replacement Project No. _____.

The undersigned further certifies that he/she has performed the design of the item(s) listed above in conformance with all applicable local, State and Federal codes, rules, and regulations, and that his/her signature and P.E. stamp have been affixed to all calculations and drawings used in, and resulting from, the design.

The undersigned hereby agrees to make all original design drawings and calculations available to the Owner or Owner's representative within seven (7) days following written request therefore by the Owner.

CERTIFIED BY ENGINEER:	ACKNOWLEDGED BY CONTRACTOR:
Signature Date	Signature Date
Professional Engineer's Name	Project Manager's Name
Name of Company	Name of Contractor
Address	Address

THIS PAGE INTENTIONALLY LEFT BLANK

SECTION 01350

ENVIRONMENTAL PROTECTION PROCEDURES

PART 1 GENERAL

1.01 SCOPE OF WORK

A. Furnish all labor, materials, and equipment, and perform all work required for the prevention of environmental pollution in conformance with applicable laws and regulations, during and as the result of construction operations under this Contract. For the purpose of this Project, environmental pollution is defined as the presence of chemical, physical, or biological elements or agents that adversely affect human health or welfare; unfavorably alter ecological balances of importance to human life; affect other species of importance; or degrade the utility of the environment for aesthetic and/or recreational purposes.

B. The control of environmental pollution requires consideration of air, water, and land, and involves management of noise and solid waste, as well as other pollutants.

C. These Specifications are intended to ensure that construction is achieved with a minimum of disturbance to the existing ecological balance between a water resource and its surroundings. These are general guidelines, and it is the Contractor's responsibility to determine and implement the specific construction techniques to meet these guidelines.

1.02 RELATED SECTIONS

A. Section 00800 – Supplementary Conditions

B. Section 01111 – Site Conditions

C. Section 02100 – Site Preparation

D. Section 02200 – Earthwork

E. Section 02370 – Erosion and Sedimentation Control

F. Section 02921 – Sodding

1.03 APPLICABLE REGULATIONS

A. Comply with all applicable federal, state, and local laws and regulations concerning environmental pollution control and abatement.

1.04 NOTIFICATIONS

A. When the Engineer identifies any portion of the work not in compliance with the foregoing provisions, or any other environmentally objectionable act, the Contractor shall take immediate action to correct the issue and restore any affected areas on or adjacent to the site.

B. State or local agencies responsible for verification of certain aspects of the environmental protection requirements may notify the Contractor in writing, through the Engineer, of any non-compliance with state or local requirements. After receipt of such notice from the Engineer or from the regulatory agency, the Contractor shall immediately take corrective action. When delivered to the Contractor's authorized representative at the work site, such notice shall be deemed sufficient for the purpose of non-compliance notification.

C. If the Contractor fails or refuses to comply promptly, the Owner may issue an order stopping all or part of the work until satisfactory corrective action has been taken. No part of the time lost due to any such stop orders shall be made the subject of a claim for extension of time or for excess costs or damages by the Contractor unless it is later determined that the Contractor is in compliance.

1.05 PAYMENT PROCEDURES

A. The work specified in this Section shall be considered incidental to the project and payment will be included as part of the appropriate lump sum or unit price bid items indicated in the Bid Form.

PART 2 PRODUCTS (NOT USED)

PART 3 EXECUTION

3.01 PROTECTION OF STREAMS

A. Exercise care to prevent, or reduce to a minimum, any damage to any stream from pollution by debris, sediment, or other material, or from the manipulation of equipment and/or materials in or near such streams. Water used for washing or processing that contains detergents, solvents or chemicals may not be discharged to a stream and must be contained and disposed of in a state-approved facility. Water that contains oils or sediments that will reduce the quality of the stream water shall not be discharged into a stream. Water from washing operations that contains no detergents or chemicals shall be diverted through a settling basin or filter before being directed into the streams, but in no circumstance may oils be released.

B. The Contractor shall not discharge water from dewatering operations directly into any live or intermittent stream, channel, wetlands, surface water or any storm sewer. Water from dewatering operations shall be treated by filtration, settling or sedimentation basins, or other approved method to reduce the amount of sediment contained in the water.

C. Take all preventative measures and procedures to avoid spillage of petroleum products and other pollutants. In the event of spillage, take prompt remedial action in accordance with a contingency action plan approved by the Arkansas Department of Energy & Environment – Environmental Quality (ADEQ). Contractor shall submit two (2) copies of approved contingency plans to the Engineer.

3.02 PROTECTION OF LAND RESOURCES

A. After completion of construction, restore land resources within the project boundaries and disturbed areas outside the limits of permanent work, so that the areas will appear natural and not detract from the appearance of the Project. Confine all construction activities to construction and staging areas shown on the Drawings.

B. Outside of areas requiring earthwork for the construction of the new facilities, the Contractor shall not deface, injure, or destroy trees or shrubs, nor remove or cut them without prior approval. Do not fasten to or attach any ropes, cables, or guy wires to any existing nearby trees for anchorage unless specifically authorized by the Engineer. Where such special emergency use is permitted, first wrap the trunk with a sufficient thickness of burlap or rags over which softwood cleats shall be tied before any rope, cable, or wire is placed. The Contractor shall be responsible for any damage resulting from such use.

C. Where trees may possibly be defaced, bruised, injured, or otherwise damaged by the Contractor's equipment, dumping or other operations, protect such trees by erecting safety fencing or temporary chain link fencing around the tree at the canopy drip line. Monuments and markers shall be protected similarly before beginning operations near them.

D. Any trees or other landscape feature scarred or damaged by the Contractor's equipment or operations shall be restored as nearly as possible to its original condition. The Engineer will decide whether a method of restoration shall be used or if damaged trees shall be removed and disposed.

1. All trimming or pruning shall be performed in an approved manner by experienced workmen with saws or pruning shears. Tree trimming with axes will not be permitted.

2. Climbing ropes shall be used where necessary for safety. Trees that are to remain, both within or outside established clearing limits, that are subsequently damaged by the Contractor and are beyond saving in the opinion of the Engineer, shall be immediately removed and replaced.

E. The Contractor shall locate storage and stockpile areas and other construction buildings on cleared portions of the job site or on areas to be cleared as shown on the Drawings. The Engineer shall approve all stockpile and storage areas, and they shall not be located within wetlands or floodplains. The preservation of the existing landscape shall be an imperative consideration in the selection of all sites and in the construction of buildings.

F. If the Contractor proposes to construct temporary roads or embankments and excavations for plant and/or work areas, submit the following for approval at least ten (10) days prior to scheduled start of such temporary work:

1. A layout of all temporary roads, excavations, and embankments to be constructed within the work area,

2. Details of temporary road construction including drainage features,

3. Drawings and cross sections of proposed embankments and their foundations, including a description of proposed materials,

4. A landscaping drawing showing the proposed restoration of the area.

G. Removal of any trees and shrubs outside the limits of existing clearing area shall be indicated on the landscaping drawing. The drawing shall also indicate location of required guard posts or barriers required to control vehicular traffic passing close to trees and shrubs to be maintained undamaged. The drawing shall provide for the obliteration of construction scars as such and shall provide for a natural appearing final condition of the area. Modification of the Contractor's

approved drawings shall be made only with the written approval of the Engineer. No unauthorized road construction, excavation or embankment construction including disposal areas will be permitted.

H. Remove all signs of temporary construction facilities such as haul roads, work areas, structures, foundations of temporary structures, stockpiles of excess of waste materials, or any other vestiges of construction as directed by the Engineer. It is anticipated that excavation, filling, and grading of roadways will be required to restore the area to near natural conditions, which will permit the growth of vegetation thereon. The disturbed areas shall be prepared and sodded as described in Section 02921, Sodding, or as approved by the Engineer.

I. All debris and excess material will be disposed of outside wetland or floodplain areas in an environmentally sound manner.

3.03 PROTECTION OF AIR QUALITY

A. Burning: The use of burning at the project site for the disposal of refuse and debris will not be permitted.

B. Dust Control: Maintain all excavations, embankment, stockpiles, access roads, plant sites, waste areas, borrow areas, and all other work areas to minimize the generation of dust that could exceed air quality standards, or which otherwise could create a hazard or nuisance to others.

C. An approved method of stabilization consisting of sprinkling or other similar methods will be permitted to control dust. The use of petroleum products is prohibited. The use of chlorides may be permitted with approval from the Engineer and local environmental regulations.

D. Sprinkling, when approved, must be repeated at such intervals as to always keep all parts of the disturbed area at least damp, and the Contractor must have sufficient suitable equipment on the job to accomplish this if sprinkling is used. Dust control shall be performed as the work proceeds and whenever a dust nuisance or hazard occurs, as determined by the Engineer.

E. The Owner shall not be responsible for the providing of water used for dust control.

3.04 TRASH REMOVAL

A. Execute periodic cleaning to keep the Work site and adjacent properties free from accumulations of waste materials, rubbish, and windblown debris, resulting from construction operations.

B. Provide on-site containers for the collection of waste materials, debris, and rubbish. Dispose of all waste material daily including containers, food debris, and other miscellaneous construction materials in on-site containers and/or remove from the site to a legal disposal area.

C. Remove waste materials, debris, rubbish from the site periodically, and dispose of at legal disposal areas away from the site.

3.05 MAINTENANCE OF POLLUTION CONTROL FACILITIES DURING CONSTRUCTION

A. During the life of this Contract, maintain all facilities constructed for pollution control as long as the operations creating the particular pollutant are being carried out or until the material concerned has become stabilized to the extent that pollution is no longer being created.

3.06 NOISE CONTROL

A. The Contractor shall make every effort to minimize noises caused by construction operations. Equipment shall be equipped with silencers or mufflers designed to operate with the least possible noise in compliance with federal, state, and local regulations.

END OF SECTION

THIS PAGE INTENTIONALLY LEFT BLANK

SECTION 01450

FIELD QUALITY CONTROL

PART 1 GENERAL

1.01 SCOPE OF WORK

A. This Section defines the responsibilities of the Contractor to adequately test materials and products used for the construction of site, concrete and masonry improvements.

1.02 RELATED SECTIONS

A. Section 01300 – Submittals

B. Section 01400 – Quality Requirements

C. Division 2 – Site Construction, including site materials

D. Division 3 – Concrete, including concrete materials

E. Division 4 – Masonry, including masonry materials

1.03 REFERENCE STANDARDS

A. American Society for Testing and Materials (ASTM), latest edition:

1. ASTM C1077 Standard Practice for Agencies Testing Concrete and Concrete Aggregates for Use in Construction and Criteria for Testing Agency Evaluation

2. ASTM C1093 Standard Practice for Accreditation of Testing Agencies for Masonry

3. ASTM D3740 Standard Practice for Minimum Requirements for Agencies Engaged in Testing and/or Inspection of Soil and Rock as Used in Engineering Design and Construction

4. ASTM E329 Standard Specification for Agencies Engaged in Construction Inspection, Testing, or Special Inspection

5. ASTM E543 Standard Specification for Agencies Performing Nondestructive Testing

1.04 SUBMITTALS

A. See Section 01300, Submittals, for submittal procedures.

B. Submit copies of all testing results, both passing and failing, to the Engineer.

C. Submit the name and qualifications of the testing laboratory for approval prior to the commencement of work. All materials testing, whether in a laboratory or in the field, shall be conducted by a testing agency approved by the Owner.

1.05 QUALITY CONTROL AND QUALITY ASSURANCE

A. The Contractor is responsible for conducting Quality Control testing on the installation of construction materials at the work site, including those delivered from off-site sources, to prove compliance with the Specifications. Construction materials include, but are not limited to, select material, clay, topsoil, sand, rock, crushed stone, asphalt, concrete, mortar and grout. Prior to delivery to the Project site, the Contractor shall submit manufacturer or supplier certifications for approval by the Engineer on all off-site materials.

B. Contractor shall provide initial certifications on all construction materials from off-site sources at no additional cost to the Owner.

C. Any materials that fail Quality Control testing shall be reworked or replaced and then retested by the Contractor at no additional cost to the Owner. The Contractor shall submit copies of all retesting results to the Engineer.

D. The Contractor will conduct testing in accordance with the frequencies indicated in the Specifications under Division 02 (site improvements), Division 03 (concrete) and Division 04 (masonry). Any additional testing required by the Contractor to assure that the Work is done in accordance with the plans and specifications, and beyond those indicated frequencies, shall be the responsibility of the Contractor at no additional cost to the Owner.

E. Unless otherwise included on the Bid Form, the Owner will make no separate payment for Quality Control testing.

F. Nothing in the Specifications shall preclude or prevent the Owner from conducting additional Quality Assurance testing on the Project.

1.06 QUALIFICATIONS

A. Employment of testing agencies by the Contractor in no way relieves the Contractor of the obligation to perform Work in accordance with requirements of Contract Documents.

B. Contractor Employed Agency:

1. Testing agency: Comply with requirements of ASTM C1077, ASTM C1093, ASTM D3740, ASTM E329, and ASTM E543.

2. Laboratory: Authorized to operate in state in which Project is located.

3. Testing Equipment: Calibrated at reasonable intervals with devices of accuracy traceable to either National Bureau of Standards or accepted values of natural physical constants.

PART 2 PRODUCTS

2.01 TEST RESULTS

A. Each sample or test shall be accompanied by the following written data, and reported to the Engineer with the test results:

1. Name of project and identifying project number,
2. Name of Contractor,
3. Project street address,
4. Appropriate test name,
5. Date of sampling or testing,
6. Name of technician collecting samples,
7. Sample number (if more than one sample per day),
8. Name of technician performing the testing,
9. Location of the sample,
10. Storage method of untested samples, e.g., soil corings, concrete cylinders, etc.

B. Provide a minimum of one (1) electronic copy of all test results with the following distribution: the Engineer, the Engineer's field representative, and the Contractor. Additional copies shall be provided to the Owner as requested.

PART 3 EXECUTION

3.01 SAMPLING AND TESTING

A. Sampling of materials and frequency of testing shall be as specified in each section of the Specifications.

B. The sampling of materials shall be conducted in the presence of the Engineer.

C. The witnessing of any testing shall be at the discretion of the Engineer.

3.02 MEASUREMENT AND PAYMENT

A. Unless a specific bid item is included in the Bid Form, all work associated with sampling and testing of materials shall be considered incidental to the Work and will not be paid for separately.

END OF SECTION

THIS PAGE INTENTIONALLY LEFT BLANK

SECTION 01740

CLEANING

PART 1 GENERAL

1.01 SCOPE OF WORK

A. Execute cleaning during progress of the Work and at completion of the Work as required by Section 00700 – General Conditions.

1.02 RELATED SECTIONS

A. Section 00700 – General Conditions

1.03 DISPOSAL AND CLEANING

A. Conduct cleaning and disposal operations to comply with all codes, ordinances, regulations, and anti-pollution laws.

PART 2 PRODUCTS

2.01 MATERIALS

A. Use only those cleaning materials which will not create hazards to health or property, and which will not damage surfaces.

B. Use only those cleaning materials and methods recommended by manufacturer of the surface material to be cleaned.

C. Use cleaning materials only on surfaces recommended by cleaning material manufacturer.

PART 3 EXECUTION

3.01 DURING CONSTRUCTION

A. Execute periodic cleaning to keep the work, the site, and adjacent properties free from accumulations of waste materials, rubbish and windblown debris, resulting from construction operations.

B. Provide on-site containers for the collection of waste materials, debris, and rubbish. Dispose of all waste material daily including containers, food debris, and other miscellaneous materials in on-site containers and/or remove from the site.

C. Remove waste materials, debris, rubbish from the site periodically, and dispose of at legal disposal areas away from the site.

3.02 DUST CONTROL

A. Clean interior spaces prior to the start of finish painting and continue cleaning on an as-needed basis until painting is finished.

B. Schedule operations so that dust and other contaminants resulting from cleaning process will not fall on wet or newly coated surfaces.

3.03 FINAL CLEANING

A. Employ skilled workmen for final cleaning.

B. Remove grease, mastic, adhesives, dust, dirt, stains, fingerprints, labels, and other foreign materials from sight-exposed interior and exterior surfaces.

C. Wash and shine glazing and mirrors.

D. Polish glossy surfaces to a clear shine.

E. Ventilating Systems:

1. Clean permanent filters and replace disposable filters if units were operated during construction.

2. Clean ducts, blowers, and coils if units were operated without filters during construction.

F. Broom clean exterior paved surfaces; rake clean other surfaces of the grounds.

G. Prior to final completion, or Owner occupancy, the Contractor shall thoroughly clean all surfaces including glass, flooring, carpeting, walls, equipment, piping, etc. Wax cabinets and brightwork as required to restore surfaces. The Contractor shall conduct an inspection of sight-exposed interior and exterior surfaces and all work areas, to verify that the entire project is clean.

END OF SECTION

SECTION 01781

PROJECT RECORD DOCUMENTS

PART 1 GENERAL

1.01 SCOPE OF WORK

A. Maintain one (1) record copy of the following documents at the site for the Owner's use:

1. Drawings showing as-built revisions,
2. Specifications showing as-built revisions,
3. Duly issued and approved addenda,
4. Duly issued and approved Change Orders and other modifications to the Contract,
5. Engineer's Field Change Orders and other written instructions,
6. Duly processed Requests for Information and documentation,
7. Approved Shop Drawings, Material Submittals, Working Drawings, and Samples,
8. Field Test Reports,
9. Latest approved progress schedule.

B. The Owner will not approve progress payments unless Project Record Documents are current with construction progress.

1.02 RELATED SECTIONS

A. Section 01300 – Submittals

B. Section 01782 – Operation and Maintenance Data

C. Section 01783 – Warranties and Bonds

1.03 SUBMITTALS

A. See Section 01300, Submittals, for submittal procedures.

B. At contract closeout, deliver the Record Documents to the Engineer for the Owner. The Record Documents shall generally consist of redlined drawings, specifications, and other information as necessary to accurately represent the completed work.

C. Label all document containers and boxes clearly to indicate their content.

D. Accompany submittals with a transmittal letter in duplicate, containing the following:

1. Date,

2. Project title and project number,

3. Contractor's name and address,

4. Title and number of each Record Document,

5. Signatures of the Contractor or his authorized representative certifying that the submittal is complete and as required by the Contract Documents.

E. The Owner will not grant Final Acceptance of the project until the Record Documents have been turned over to and approved by the Engineer.

F. Owner reserves the right to withhold retainage fees until after the acceptable Record Documents have been submitted and approved by the Engineer.

PART 2 PRODUCTS

2.01 MARKING DEVICES

A. Provide waterproof felt tip pens as required to maintain as-built drawings described in this section using the following color coding:

1. Red: Document changes

2. Yellow: Work installed without change

3. Orange: Dimensional and other notations

4. Green: Work deleted

2.02 ELECTRONIC MEDIA DRAWINGS

A. Provide drawings, details, and schematics from approved submittals in electronic form per 3.02.D.

B. All drawings provided in electronic format shall be provided on compact disk (CD) or DVD in Portable Document Format (.pdf) with borders and title blocks clearly identifying Contract, equipment, and the scope of the drawing.

C. Drawing quality and size of presentation shall be legible at a 50% reduction of such drawings, and reduced drawings will be used for insertion in Operations and Maintenance manuals.

2.03 PROJECT LAYOUT EQUIPMENT

A. The Contractor shall have the capability of laying out the Work and recording information for the Record Documents using a survey coordinate system established by the Engineer. Layout and recording as-builts shall be accomplished using total station or global positioning system (GPS) equipment.

PART 3 EXECUTION

3.01 MAINTENANCE OF DOCUMENTS AND SAMPLES

A. Store documents and samples in the Contractor's office apart from documents used for construction as follows:

1. Provide files and racks for the storage of documents,

2. Provide locked cabinet or secure storage space for the storage of samples.

B. File documents and samples in accordance with CSI format.

C. Maintain documents in a clean, dry, legible condition, and in good order. Do not use Record Documents for construction purposes.

D. Make documents and samples available at all times for the inspection by the Engineer.

E. As a prerequisite for monthly progress payments, the Contractor shall exhibit the currently updated "record documents" for the review of the Engineer and Owner. The failure of the Engineer and/or Owner to review the documents shall not relieve the Contractor of the responsibility of their being available and up to date.

3.02 RECORDING

A. Label each document and sample "PROJECT RECORD" with a rubber stamp.

B. Record information monthly and concurrently with construction progress. Do not conceal any work until the required information is recorded.

C. Drawings (hard copies): Legibly mark on full-size drawings to record actual construction noting any variation in materials, equipment, conditions, and dimensions for the following:

1. Elevations of various structure elements in relation to elevation datum:

a. Elevations referenced to control points established by the Engineer,

b. Elevations of all structural finished floors and tops of concrete,

c. Elevations of all weirs and other flow control devices,

d. Bottom of pipe (B/P) or top of pipe (T/P) elevations for all exposed piping, indoors or outdoors.

2. All underground piping with elevations and dimensions, changes to piping location, horizontal and vertical locations of underground utilities and appurtenances, reference to permanent surface improvements, actual installed pipe material, class, etc.:

a. Top of pipe or top of concrete (TOC) elevations for all underground pipelines or encased pipes or conduits exposed during construction, whether installed or not. On straight runs of new pipe or conduit, record at least one (1) T/P elevation every 100 feet of pipe or conduit.

b. Coordinates and elevations of site piping, electrical conduits and ductbanks, including starting and ending points and directional changes. Record the horizontal location of every piping or conduit bend (vertical or horizontal), valves, other fittings, or specialty items exposed during construction, whether installed or not. On long, straight runs of pipe or conduit, record similar information between bends and other fittings at least once every 200 feet.

c. Locate all underground utilities, structures, obstacles, etc. encountered during construction, whether being installed or not, in the manner indicated above for underground pipes and conduits.

3. All embedded, buried, and concealed features of mechanical piping, site piping, electrical conduit, and structural embedments with elevations and dimensions. Reference to a permanent surface improvement or visible feature all changes to horizontal and vertical locations of pipe, fittings, underground utilities, and appurtenances. Note actual installed pipe materials, class, etc.

4. Depth of foundation elements in relation to ground elevation,

5. Field changes of dimensions and details,

6. Changes made by Field Change Order or by Change Order,

7. Details not on the original Contract Documents,

8. Equipment and piping locations,

9. Identify the actual motor installed by manufacturer's name, nameplate horsepower, and serial number,

10. Major architectural and structural changes, including relocation of doors, windows, etc.

D. Electronic Drawings, Details and Schedules: Provide electronic media copies and original plots on 11-inch x 17-inch (11" x 17") bond paper information prepared by the Contractor for construction or installation that is supplemental to the detail on the Contract Drawings and as required in specific specifications. Reference appropriate Contract Drawings that show the work. Drawings shall be in electronic format for the following:

1. All electrical and instrumentation drawings required to perform and document the work and/or additional information specified elsewhere.

2. All schematics of internal wiring of supplied equipment. Provide electronic drawings of all internal wiring of supplied equipment; utilize the equipment supplier's drawings when preparing as-built schematic drawings for connection of said equipment.

3. Interconnection diagrams for each cable, scheduled or unscheduled, in the Contract Documents. Prepare schematic diagrams for each control circuit. Diagrams included in the Contract Documents may be used for preparing final as-builts. All additional information such as cable number, wire numbers, terminal numbers, wire colors, and pair numbers shall be added electronically by the Contractor and submitted.

4. Schedules for conduit, cables, electrical power, lighting, panels, and other as also may be specified in individual sections. Provide conduit and cable schedules listing actual conduit sizes and routing along with the actual cables carried in each, based on field cable pulling records. Include equipment number and pertinent data, specification number, manufacturer and catalog number, local vendor or manufacturer's representative with address and phone number, warranty number and dates, spare parts recommended and/or provided, and installation date.

5. Contractor or supplier prepared fire protection sprinkler and alarm systems and other alarm systems accurately showing the location, size and arrangement of piping, cable appurtenances and controls.

6. Field changes of dimensions and details.

7. Changes made by Field Change Order or by Change Order.

8. Other information as required in the Specifications.

E. Specifications and Addenda: Legibly mark each Section to record the following:

1. Manufacturer, trade name, catalog number, and supplier of each product and time of equipment actually installed,

2. Changes made by Field Change Order or by Change Order.

F. Shop Drawings: After final review and approval of shop drawings, provide the following:

1. One (1) set of Engineer approved shop drawings or submittals for each piece of equipment, piping, electrical system, and instrumentation system.

3.03 DELIVERY OF PROJECT RECORD DOCUMENTS

A. Record documents will be used to verify and document progress as stated in progress payment request. Work not included in the record drawings will not be included for payment in progress payment requests.

B. Prior to the Contractor's request for a notice of Substantial Completion of any area or system on the project, the Contractor shall transmit Record Documents to the Engineer. The record documents shall include a statement indicating completion of record information for specific areas or, if for project closeout, that the documentation is completed and in compliance with Contract requirements.

C. Revise record documents as a result of any changes made or discovered during project closeout and/or commissioning.

END OF SECTION

THIS PAGE INTENTIONALLY LEFT BLANK

SECTION 02100

SITE PREPARATION

PART 1 GENERAL

1.01 SCOPE OF WORK

A. Furnish all labor, materials and equipment and perform all site preparation and removal of obstructions, complete as shown on the Drawings and as specified herein.

B. Areas to be cleared, grubbed and stripped generally consist of areas within the project site where construction is proposed.

1.02 RELATED SECTIONS

A. Section 01111 – Site Conditions

B. Section 01350 – Environmental Protection Procedures

C. Section 02200 – Earthwork

D. Section 02370 – Erosion and Sedimentation Control

E. Section 02921 – Sodding

1.03 DEFINITIONS

A. Remove: Remove and legally dispose of items except those indicated to be reinstalled, salvaged, or to remain the Owner's property.

B. Remove and Salvage: Items indicated to be removed and salvaged remain the Owner's property. Remove, clean, and pack or crate items to protect against damage. Identify contents of containers and deliver to Owner's designated storage area.

C. Remove and Reinstall: Remove items indicated; clean, service, and otherwise prepare them for reuse; store and protect against damage. Reinstall items in the same locations or in locations indicated on the Drawings.

D. Remove and Replace: Remove and legally dispose of items and replace with new items as indicated.

E. Existing to Remain: Protect construction indicated to remain against damage. When permitted by the Engineer, remove items to a suitable, protected storage location during construction, and then clean and reinstall items in their original locations.

1.04 SUBMITTALS

A. See Section 01300, Submittals, for submittal procedures.

B. Submit copies of all required permits prior to clearing, grubbing and stripping work.

1.05 COORDINATION

A. Completely coordinate the work of this Section with the work of other Sections. Verify at the site both the dimensions and work of other trades adjoining items of work in this section before commencement of items specified herein.

B. Furnish to the pertinent trades all items included under this Section that are to be built into the work of other Sections.

1.06 FIELD MEASUREMENTS

A. Take field measurements at the site to verify or supplement indicated dimensions and to ensure proper coordination of all other construction items.

1.07 LIMITS OF WORK

A. Unless otherwise indicated on the Drawings, Site Conditions, the limits of the work under this contract shall extend to the Owner's designated property lines, right-of-way or easement lines, or high water mark (for creek or drainage ditches).

B. The Owner will not be responsible for obtaining additional sites for the storage of equipment, the stockpiling of materials, the securing of additional material, or other lands not required by the finished construction. No separate payment will be made for acquisition or use of off-site storage areas.

PART 2 PRODUCTS (NOT USED)

PART 3 EXECUTION

3.01 CLEARING VEGETATION

A. Cut and remove all timber, trees, stumps, brush, shrubs, roots, grass, weeds, rubbish and any other objectionable material resting on or protruding through the surface of the ground.

B. Preserve and protect trees and other vegetation designated on the Drawings or directed to remain by the Engineer to remain as specified below.

3.02 GRUBBING

A. Grub and remove all stumps, roots larger than 1-1/2 inches in diameter, root balls or mats, brush, timber, logs, concrete rubble, and other debris encountered to a depth of 18 inches below original grade.

B. Refill all grubbing holes and depressions excavated below the finished ground surface with select material as directed by the Engineer. Compact fill material to a density conforming to the requirements of Section 02200, Earthwork.

3.03 STRIPPING

A. Strip and stockpile topsoil from all areas to be occupied by buildings, structures, sidewalks, roadways, and all areas to be excavated or filled.

B. Stockpile topsoil free from brush, trash, large stones, and other extraneous material. Avoid mixing topsoil with subsoil.

C. Protect stockpiled topsoil until it is used for site restoration or landscaping. Dispose of all excess material.

3.04 DISPOSAL

A. Dispose of material and debris from site preparation operations by hauling to an approved off-site disposal area. Burial of rubbish or debris is not allowed on the project site.

B. Burning of cleared and grubbed materials will not be permitted.

3.05 PROTECTING VEGETATION

A. Protect trees and other vegetation designated on the Drawings, or as directed by the Engineer to remain from damage, from all construction operations by erecting suitable barriers, guards, enclosures or by other approved means. For trees designated for protection on the Drawings, erect and maintain temporary fencing at the drip line of each tree.

B. Conduct clearing operations in a manner to prevent falling trees from damaging trees and vegetation designated to remain, to prevent damaging the work being constructed, and to provide for the safety of employees and others.

C. Maintain protection of vegetation until all work has been completed.

D. Do not operate heavy equipment or stockpile materials within the branch spread (drip line) of existing trees.

E. Secure the services of a certified arborist or approved tree service to repair immediately any damage to existing tree crowns, trunks, or root systems.

F. When work is completed, remove all dead and downed trees. Trim all live trees of dead and diseased limbs and branches. Make all cuts cleanly at their juncture with the branch or proceeding branch without injury to the trunk or remaining branches.

G. Restrict construction activities to those areas within the limits of construction as designated on the Drawings, within public rights-of-way, and within easements provided by the Owner. Restore damage to adjacent public or private properties and improvements to their original condition and to the full satisfaction of the property owner and the Engineer.

3.06 CLEARING OTHER WORK AREA OBSTRUCTIONS

A. Clear the work area of all obstructions that will affect or will be affected by the construction of the project. Remove all items so encountered unless otherwise shown on the Drawings or otherwise directed by the Engineer. These items shall include, but not be limited to signs, culverts,

headwalls, pavements, landscaping and other items constituting an obstruction, which are encountered.

B. Remove as part of the clearing operation all structures, foundations, culverts, headwalls, concrete slabs and other obstructions or rubbish of any nature, which interfere with the proposed improvements, unless otherwise directed by the Engineer or noted on the Drawings.

3.07 PROTECTING AND REMOVING OBSTRUCTIONS

A. Take every precaution in protecting and removing obstructions that are to be replaced or reconstructed.

B. Coordinate removal and relocation of traffic and street signs with the City Street Department.

3.08 OBSTRUCTIONS NOT SHOWN ON DRAWINGS

A. The Drawings show the location of certain exposed and buried obstructions, as well as existing surface and subsurface structures. Neither the Owner nor the Engineer assumes any responsibility for failure to show obstructions or structures on the Drawings or to show them in their exact location. The absence of these obstructions on the Drawings does not relieve the Contractor of any responsibility in the protection, removal and satisfactory replacement of these obstructions. The failure to show the obstructions will not be considered sufficient basis for claims for extra work or for increasing the pay quantities in any manner whatsoever unless the obstruction encountered is such as to necessitate substantial changes in the lines and grades of the proposed improvements or requires the building of a special structure.

B. The removal or relocation of existing franchised utility mains required to permit orderly progress of the work shall be accomplished by local agencies, as shown on the Drawings or specified within these specifications. Notify all utility companies, all pipeline owners, or other parties affected, and endeavor to have the necessary adjustments of the public or private utility fixtures, pipelines, pole lines, and other appurtenances within or adjacent to the limits of the construction made as soon as possible. The relocation of existing utility service lines is the responsibility of the Contractor.

C. It is understood and agreed that the Contractor has considered in his bid all the permanent and temporary utility appurtenances in their present or relocated positions as shown on the Drawings or as specified herein. Except as noted, no additional compensation will be allowed for any delays, inconvenience, or damage sustained by Contractor due to any interference from said utility appurtenances or the operation of moving them.

D. The Contractor shall notify the owner of the utility in the path of his operation, sufficiently in advance of his work, to enable the utility owner to have a representative present during construction activities.

3.09 WATERWAYS

A. Existing natural and artificial waterways shall be left open to flow freely. Provide temporary dams or bypasses as necessary and/or as directed by the Engineer. Provide erosion control features in conformance with the Storm Water Pollution Prevention Plan and the requirements of Section 02370, Erosion and Sedimentation Control.

3.10 REMOVING CULVERTS

A. Do not remove culverts or other drainage structures until making satisfactory arrangements to accommodate traffic.

3.11 REMOVAL OF PAVEMENTS AND SIDEWALKS

A. Remove all pavements, driveways, sidewalks, curbs and other such items indicated in the Drawings in a workmanlike manner. Restrict the area of each removed item to the minimum possible area that will still conform to the lines and grades of the completed construction.

B. Saw cut asphalt and concrete surfaces at the boundaries of the areas to be removed. Saw reasonably true to line and to a depth so that undue under-breakage or shattering of the adjacent surfaces will not occur when removing the material. The equipment for sawing shall be approved mechanical concrete saws in satisfactory working condition and adequately powered to cut the depth required.

3.12 FENCE REMOVAL AND REPLACEMENT

A. Relocate fence designated for replacement in advance of other construction. If designated on the Drawings, provide temporary fencing clear of the proposed construction. Store materials not required for the temporary fence. Replace the fence in its original alignment, if not otherwise shown on the Drawings, utilizing the existing fence materials. Replace all damaged fence materials at no additional cost to the Owner.

B. Unless directed by the Engineer, secure areas enclosed by fences at all times that the fences are removed, or the areas are otherwise accessible to the public.

3.13 PROTECTION OF PROPERTY

A. Preserve all public and private property encountered in the construction of these improvements.

B. The Contractor shall be responsible for all damage or injury to the property of any character, during the prosecution of the work, resulting from any act, omission, neglect or misconduct in his manner or methods of executing the work, or at any time due to defective work or materials, and said responsibility will not be released until the project has been completed and accepted.

C. When or where any direct or indirect damage or injury is done to public or private property by or because of any act, omission, neglect or misconduct in the execution of the Work, or in consequence of the non-execution thereof, Contractor shall restore such damage at no additional cost to the Owner. Restore property to its existing or better condition by repairing, rebuilding or otherwise restoring as directed by the Engineer, or make good such damage or injury in an acceptable manner.

3.14 EXPLOSIVES

A. Explosives are prohibited for excavation.

3.15 TRENCH SAFETY

A. The current edition of Occupational Safety and Health Administration Standard for Excavation and Trench Safety Systems, 29 CFR 1926, Subpart P, is specifically incorporated and made a part of these specifications and contract documents as required by Arkansas Code Annotated 22-9-212.

3.16 SITE MAINTENANCE

A. Maintain all disturbed areas of the site during construction. Maintenance shall include periodic mowing of areas within and adjacent to the following: security and construction fencing, silt fencing and other erosion control devices, and equipment and material storage areas.

END OF SECTION

SECTION 02200

EARTHWORK

PART 1 GENERAL

1.01 SCOPE OF WORK

A. Furnish all labor, materials, equipment, and incidentals required to perform all excavation work, hauling, grading, placement, and compaction of fill and backfill. Work shall include the disposal of unsuitable waste and surplus earthen materials, and placement of topsoil.

B. Perform all work within the limits necessary for the construction of the improvements and in conformance with the lines, grades, thicknesses, and typical cross sections shown on the Drawings and as specified herein.

1.02 RELATED SECTIONS

A. Section 00800 – Supplementary Conditions

B. Section 01111 – Site Conditions

C. Section 01450 – Field Quality Control

D. Section 02100 – Site Preparation

E. Section 02316 – Structural Excavation, Backfilling and Grading

F. Section 02370 – Erosion and Sedimentation Control

G. Section 02921 – Sodding

1.03 REFERENCE STANDARDS

A. American Association of State Highway and Transportation Officials (AASHTO), latest edition:

1. AASHTO M57 Standard Specification for Materials for Embankments and Subgrades

2. AASHTO M145 Classification of Soils and Soil-Aggregate Mixtures for Highway Construction Purposes

3. AASHTO M146 Terms Relating to Subgrade, Soil-Aggregate, and Fill Materials

4. AASHTO M288 Standard Specification for Geotextile Specification for Highway Applications

5. AASHTO T99 Standard Method of Test for Moisture-Density Relations of Soils Using a 2.5-kg (5.5-lb) Rammer and a 305-mm (12-in.) Drop

6. AASHTO T180 Standard Method of Test for Moisture-Density Relations of Soils Using a 4.54-kg (10-lb) Rammer and a 457-mm (18-in.) Drop

7. AASHTO T310 Standard Method of Test for In-Place Density and Moisture Content of Soil and Soil-Aggregate by Nuclear Methods (Shallow Depth)

B. American Society for Testing and Materials (ASTM), latest edition:

1. ASTM C33 Standard Specification for Concrete Aggregates

2. ASTM D698 Standard Test Methods for Laboratory Compaction Characteristics of Soil Using Standard Effort (12,400 ft-lbf/ft_3 (600 kN-m/m_3))

3. ASTM D1557 Standard Test Methods for Laboratory Compaction Characteristics of Soil Using Modified Effort (56,000 ft-lbf/ft_3 (2,700 kN-m/m_3))

4. ASTM D2487 Standard Practice for Classification of Soils for Engineering Purposes (Unified Soil Classification System)

5. ASTM D4318 Standard Test Methods for Liquid Limit, Plastic Limit, and Plasticity Index of Soils

6. ASTM D4355 Standard Test Method for Deterioration of Geotextiles by Exposure to Light, Moisture and Heat in a Xenon Arc-Type Apparatus

7. ASTM D4491 Standard Test Methods for Water Permeability of Geotextiles by Permittivity

8. ASTM D4533 Standard Test Method for Trapezoid Tearing Strength of Geotextiles

9. ASTM D4595 Standard Test Method for Tensile Properties of Geotextiles by the Wide-Width Strip Method

10. ASTM D4632 Standard Test Method for Grab Breaking Load and Elongation of Geotextiles

11. ASTM D4751 Standard Test Methods for Determining Apparent Opening Size of a Geotextile

12. ASTM D5084 Standard Test Methods for Measurement of Hydraulic Conductivity of Saturated Porous Materials Using a Flexible Wall Permeameter

13. ASTM D6241 Standard Test Method for Static Puncture Index Strength of Geotextiles and Geotextile-Related Products Using a 50mm Probe

14. ASTM D6938 Standard Test Methods for In-Place Density and Water Content of Soil and Soil-Aggregate by Nuclear Methods (Shallow Depth)

C. Arkansas Department of Transportation (ARDOT):

1. Standard Specifications for Highway Construction, current edition

D. Occupational Safety and Health Administration (OSHA), latest edition:

1. All excavations and support systems shall conform to applicable OSHA excavation, trenching, and shoring standards that are contained in the U.S. Code of Federal Regulations 29 CFR 1926.650-1926.653, and other federal, state, or local requirements. In the event of a conflict, comply with the more restrictive applicable requirements.

2. The current edition of OSHA Standard for Excavation and Trench Safety Systems, 29 CFR 1926, Subpart P, is specifically incorporated and made a part of these specifications and contract documents as required by Arkansas Code Annotated 22-9-212.

1.04 DEFINITIONS

A. Boulder Excavation: The removal of boulders or boulder pieces larger than 1 cubic yard (1 CY) in volume that requires equipment for splitting and breaking methods, or that requires increasing a trench or excavated area more than 18 inches.

B. Common Excavation: The removal of all material not classified as boulder, concrete or rock excavation. Classify as Common Excavation any piece of boulder or concrete 1 cubic yard (1 CY) or less in volume that can be mechanically removed without drilling and blasting, breaking, splitting, or increasing the trench or excavated area as specified.

C. Concrete Excavation: The removal of concrete pieces larger than 1 cubic yard (1 CY) in volume that requires equipment for splitting and breaking methods, or that requires increasing a trench or excavated area more than 18 inches. Concrete excavation includes materials composed of Portland cement that are not identified in other sections of the Specifications and excluding manholes, drainage structures, vaults, piping or other appurtenances that are typically classified as Common Excavation.

D. Exploratory Excavation: The removal and replacement of materials from locations shown on the Drawings, as directed by the Engineer, or for the Contractor's benefit for the purpose of investigating underground conditions and to identify potential utility conflicts between existing and proposed facilities. Unless otherwise indicated in the Bid Proposal, the Owner will not make separate payment for exploratory excavation.

E. Rock Excavation: Sedimentary rock which, by demonstration, cannot be excavated with equipment weighing at least 50,000 pounds and having at least 140 net horsepower (140 HP), equipped with a ripper or similar approved equipment without prior systematic drilling and blasting or breaking with power-operated rock excavation tools. The Engineer may waive the demonstration if the material encountered is well-defined rock.

F. Trench Excavation: The removal of materials encountered in trenches to the depths as shown on the Drawings or as directed by the Engineer. See Section 02315, Excavation, Trenching and Backfilling.

G. Undercut Excavation: The removal and disposal of undesirable material and replacement with select material or other approved backfill below finished subgrade or below existing grade in areas

of proposed embankment. Undesirable material shall include deposits of saturated or unsaturated mixtures of soils and organic matter not suitable for subgrade or foundation material. The Engineer shall determine the need and extent of Undercut Excavation and may designate as unsuitable those soils that cannot be stabilized in place through normal drying and compactive efforts when satisfactory weather and ground conditions exist.

H. Where the phrase "in-the-dry" is used in these Specifications, it shall be defined to mean a soil condition where the in-place moisture content is no more than two percent (2%) above the optimum moisture content of that soil. The optimum moisture content shall be as determined by the laboratory test of the moisture-density relation appropriate to the specified level of compaction, unless otherwise recommended in the geotechnical report. See also Section 02140, Dewatering and Drainage.

I. Where used in this Specification "structures" refers to all buildings, wet wells, manholes and below-grade vaults. Stormwater structures and duct banks are not considered “structures” in this context.

1.05 SUBMITTALS

A. See Section 01300, Submittals, for submittal procedures.

B. Submit the proposed methods of construction, including excavation, backfilling, and compaction for the various portions of the work.

C. Submit an excavation and trench safety plan to the Engineer for review for excavations greater than or equal to 5 feet deep. Coordinate with the requirements in Section 02250, Excavation Shoring and Protection.

D. Furnish test data to indicate compliance of all earthwork materials, placement, and compaction methods with this specification, including off-site material proposed for the Project.

1.06 QUALITY ASSURANCE

A. Responsibilities for providing the quality control and quality assurance testing activities are defined in Section 01450, Field Quality Control. Testing frequencies are defined under the paragraph on Field Testing at the end of this Section.

B. Furnish manufacturer or supplier certification for all products and materials from off-site sources for approval by the Engineer. Materials shall include but not be limited to select material, clay, rock, crushed stone, and topsoil. Provide initial material certifications at no additional cost to the Owner.

1.07 COORDINATION

A. Coordinate the work of this Section with the work of other sections. Verify at the site both the dimensions and work of other trades adjoining items of work in this Section before commencement of items herein specified.

B. Furnish to the pertinent trades all items included under this Section that are to be built into the work of other sections.

1.08 FIELD MEASUREMENTS

A. Take field measurements at the site to verify or supplement indicated dimensions and to ensure proper coordination of all other construction items.

1.09 PROJECT SITE REQUIREMENTS

A. Subsurface Conditions

1. The availability and reliability of geotechnical and other subsurface information known to the Owner is defined in Section 00800, Supplementary Conditions. Do not assume that materials other than those disclosed by soil borings or test pits will not be encountered, or that the proportions or character of the various materials will not vary from those indicated in the geotechnical investigation report. Any conclusions drawn by the Contractor from known reports, including the character of the materials to be encountered and degree of difficulty to be expected in the performance of the Work, are the sole responsibility of the Contractor.

2. The Contractor is encouraged to perform an independent subsurface investigation. Coordinate access to the site with the Owner.

3. No claim for extra compensation or extension of time will be considered because of any variation in site, soil, or water conditions described in the geotechnical reports to that encountered.

PART 2 PRODUCTS

2.01 COMMON FILL

A. Common Fill: Soil material substantially free of organic materials, topsoil, wood, peat, loam, trash, or other objectionable materials that may be compressible through decomposition or that may not be properly compacted. Common fill shall not contain rocks or stones larger than 4 inches in the largest diameter and shall have a maximum of 75% passing the No. 40 sieve and a maximum of 20% passing the No. 200 sieve. Common fill shall have a maximum liquid limit of 45 and a maximum plasticity index (PI) of 25 (per ASTM D4318).

B. Common fill shall not contain granite blocks, broken concrete, masonry rubble or other similar materials. It shall have physical properties such that it can be readily spread and compacted during filling. Snow, ice, and frozen soil are not permitted. Subject to the Engineer's approval, native material (excluding sandy, lean clay) conforming to these requirements may be used as common fill.

2.02 SELECT BACKFILL

A. Select Backfill: Select backfill must be free of sod, stumps, logs, roots, or other perishable or deleterious matter. It shall be a granular material with a maximum particle size of 3 inches, well graded from coarse to fine. The select material shall conform to AASHTO classification A-1, A-2-4 or A-2-5, or with the Engineer's approval, a sandy or gravely clay conforming to classification A-2-6 or A-6. The following additional restrictions apply:

1. Select backfill material classified as AASHTO A-2-6 may be submitted for review and evaluation by the Engineer provided that it has a plasticity index not exceeding 15.

2. Select backfill material classified as AASHTO A-6 may be submitted for review and evaluation by the Engineer provided that it has a plasticity index less than 15.

3. Evaluation of A-2-6 or A-6 material shall not imply any obligation of the Engineer to accept it for use in the Work.

4. Crusher screenings, including nepheline syenite granite fines (Donna Fill®) will not be allowed as select fill or backfill material.

5. The Contractor shall furnish certified test results to indicate compliance of select material from off-site stockpiles with this specification at no additional cost to the Owner.

6. Select backfill with more than 30 percent (30%) retained on a No. 4 sieve may be tested in accordance with ASTM D1557.

2.03 CRUSHED AGGREGATE (COARSE DRAIN FILL)

A. Coarse Drain Fill: Crushed aggregate shall be well graded, hard, durable, angular, or subangular particles ranging from 3/4-inch maximum diameter to the No. 4 sieve. Unless otherwise approved by the Engineer, the material shall meet the requirements of ASTM C33, Gradation 67 for coarse aggregate.

2.04 OVERSIZED ROCK

A. Oversized rock: Stone for oversized rock shall be hard, durable, crushed stone aggregate, as manufactured by local quarries, meeting the requirements of ARDOT Standard Specifications Section 207 Stone Backfill. Stone shall range from 1½-inch to 6-inch maximum. It shall not contain more than 5-percent (5%) by weight of shale, slate, or other deleterious matter. The stone shall be uniformly graded, and the amount passing the 1½-inch sieve shall not be more than ten percent (10%) by weight. When backfilling with oversized rock to subgrade elevation, the top 4 to 6 inches shall be ASTM C33 #67 coarse aggregate or Class 7 aggregate base in accordance with ARDOT Standard Specifications.

2.05 GEOTEXTILE FABRIC FOR SOILS

A. Geotextile fabric shall be woven or non-woven synthetic fiber fabric conforming to one (1) of the following applications as indicated in the Drawings:

1. Subsurface Drainage, Class 2: Geotextile shall be used by placing against a soil to allow for long-term passage of water into a subsurface drain system that retains the in-situ soil or encapsulates bedding and backfill for buried utility piping. Geotextile fabric shall be a non-woven polypropylene fabric meeting the requirements of AASHTO M288, Class 2 and the properties in Table 1 below. Geotextile fabric shall be TenCate Mirafi 160N or approved equal.

Table 1
Geotextile Fabric for Soil – Subsurface Drainage

Fabric Properties	ASTM Test Method	Unit	Min. Average Roll Value	
			MD	CD
Grab Tensile Strength	D4632	lb	160	160
Grab Tensile Elongation	D4632	%	50	50
Trapezoid Tear Strength	D4533	lb	60	60
CBR Puncture Strength	D6241	lb	410	
Apparent Opening Size (AOS)*	D4751	U.S. Sieve	70	
Permittivity	D4491	sec^{-1}	1.5	
Flow Rate	D4491	$gal/min/ft^2$	110	
UV Resistance (at 500 hours)	D4355	% strength retained	70	

*ASTM D4751, AOS is a maximum opening diameter value

2. Separation, Class 3: Geotextile shall be used to prevent mixing of subgrade soil and an aggregate cover material (subbase, base, select material, etc.), and beneath pavements where separation of two (2) dissimilar materials is required but water seepage through the geotextile is not a critical function. Geotextile fabric shall be a woven polypropylene fabric meeting the requirements of AASHTO M288, Class 3 and the properties in Table 2 below. Geotextile fabric shall be TenCate Mirafi 500X or approved equal.

Table 2
Geotextile Fabric for Soil – Separation

Fabric Properties	ASTM Test Method	Unit	Min. Average Roll Value	
			MD	CD
Grab Tensile Strength	D4632	lb	200	200
Grab Tensile Elongation	D4632	%	15	15
Trapezoid Tear Strength	D4533	lb	75	75
CBR Puncture Strength	D6241	lb	700	
Apparent Opening Size (AOS)*	D4751	U.S. Sieve	40	
Permittivity	D4491	sec^{-1}	0.05	
Flow Rate	D4491	$gal/min/ft^2$	4	
UV Resistance (at 500 hours)	D4355	% strength retained	70	

*ASTM D4751, AOS is a maximum opening diameter value

3. Stabilization, Class 1: Geotextile shall be used in wet, saturated conditions to provide the coincident functions of separation and filtration. Geotextile fabric shall be a non-woven polypropylene fabric meeting the requirements of AASHTO M288, Class 1 and the properties in Table 3 below. Geotextile fabric shall be TenCate Mirafi 160N or approved equal.

Table 3
Geotextile Fabric for Soil – Stabilization

Fabric Properties	ASTM Test Method	Unit	Min. Average Roll Value	
			MD	CD
Grab Tensile Strength	D4632	lb	160	160
Grab Tensile Elongation	D4632	%	50	50
Trapezoid Tear Strength	D4533	lb	60	60
CBR Puncture Strength	D6241	lb	410	
Apparent Opening Size (AOS)*	D4751	U.S. Sieve	70	
Permittivity	D4491	sec^{-1}	1.5	
Flow Rate	D4491	$gal/min/ft^2$	110	
UV Resistance (at 500 hours)	D4355	% strength retained	70	

*ASTM D4751, AOS is a maximum opening diameter value

4. Enhanced Stabilization, Class 1A: Geotextile shall be used in wet and otherwise poor subgrade conditions requiring enhanced separation of materials, filtration and greater load distribution for structures. Geotextile fabric shall be a woven polypropylene fabric meeting the requirements of AASHTO M288, Class 1A and the properties in Table 4 below. Geotextile fabric shall be TenCate Mirafi HP270 or approved equal.

Table 4
Geotextile Fabric for Soil – Enhanced Stabilization

Fabric Properties	ASTM Test Method	Unit	Min. Average Roll Value	
			MD	CD
Tensile Strength (at ultimate)	D4595	lb	2640	2460
Tensile Strength (at 5% strain)	D4595	%	1272	1440
CBR Puncture Strength	D6241	lb	410	
Apparent Opening Size (AOS)*	D4751	U.S. Sieve	30	
Flow Rate	D4491	$gal/min/ft^2$	40	
Permittivity	D4491	sec^{-1}	0.6	
UV Resistance (at 500 hours)	D4355	% strength retained	80	

*ASTM D4751, AOS is a maximum opening diameter value

B. Staples for installing filter fabric shall be made of wire, 0.091-inch in diameter or greater, U-shaped, with 6-inch legs and a 1-inch crown.

2.06 IMPERMEABLE FILL (CLAY)

A. Impermeable Fill: Clay material from an on-site or off-site source, tested to ensure a permeability coefficient less than or equal to 1 x 10^{-7} cm/sec after compaction, and accepted by the Engineer. The material shall conform to one of the following under the United Soil Classification System in ASTM D2487: CL or CH. The Contractor shall furnish certified test results to indicate the maximum dry density of material from off-site sources at no additional cost to the Owner.

2.07 RIPRAP (NOT USED)

2.08 TOPSOIL

A. See Section 02920, Seeding and/or Section 02921, Sodding.

PART 3 EXECUTION

3.01 GENERAL

A. Earthwork shall consist of all excavation, embankment, dressing, shaping, and finishing necessary for the construction, compaction and completion of all subgrades and other earthwork indicated on the Drawings to the required alignment, grade and typical cross section as shown on the Drawings or as directed by the Engineer.

B. Do not excavate below grade except where rock is encountered or where the Engineer directs the removal of unstable material. If through negligence or other fault, excavation extends below the designated lines, replace the over-excavated material with approved backfill materials, in an approved manner and condition, and at the Contractor's expense. The Engineer shall have authority to reject or modify excavation operations; have authority over moving, placing, and disposition of all material; and shall determine the suitability of material to be placed in embankments.

C. The Contractor is responsible for determining the character, quantity, and distribution of all material to be excavated.

D. Always perform excavation work in a manner to control surface and subsurface drainage. When directed by the Engineer, install temporary drains and drainage ditches to intercept or divert surface water that may affect the Work. Suspend earthwork operations at any time when satisfactory results cannot be obtained because of rain, freezing weather, or other unsatisfactory conditions.

E. Material determined by the Engineer to be unsatisfactory for subgrade construction shall be classified as undercut excavation and shall be removed as directed by the Engineer. Backfill undercut areas with select backfill from off-site borrow areas unless otherwise directed by the Engineer. Dispose of all unsuitable material removed from undercut areas off-site.

F. Excavate all rock or unyielding material that cannot be shaped to conform to the subgrade elevations to a minimum depth of 6 inches below the deepest subgrade level of excavation. Fill the excavation to grade with approved material.

G. Use only suitable excavated material in the formation of embankments and backfills unless otherwise specified. Place the excavated material in areas of the embankment as directed by the Engineer. Remove muck, peat, matted roots, or other unsatisfactory material for subgrade foundation to the depth directed by the Engineer. Dispose of all unsuitable material off-site.

H. Do not commence construction of embankments or backfilling until the area has been inspected and approved by the Engineer. Clear and grub fill areas to remove all vegetation and objectionable material. Remove all topsoil prior to the commencement of filling. Backfill all depressions or holes beneath the ground surface, whether caused by grubbing or other reasons with suitable material and compacted before commencing construction of the subgrade. Scarify areas to be filled to a depth of 6 inches prior to the placement of embankment fill. Construct fill to the specified grade in uniform layers parallel to the finished surface and not more than 8 inches in thickness, loose measurement, and bench them into the native soils. The material in the layers shall be of the proper moisture content before compacting. Wetting or drying of the material and manipulation when necessary to secure a uniform moisture content throughout the layer shall be required.

I. Accomplish backfilling of trenches for storm drainage facilities, water line improvements, sanitary sewer improvements, and other utility relocations as specified in other sections of these specifications. Compact backfill to the specified density.

3.02 PREPARATION

A. Exploratory Excavation

1. Perform exploratory excavation work for the purpose of verifying the location of underground utilities and structures and to check for unknown utilities and structures, prior to commencing excavation work.

2. Backfill exploratory excavations as soon as the desired information has been obtained. Stabilize backfilled surfaces in accordance with approved erosion and sedimentation control plans.

3.03 SOIL COMPACTION

A. In the preparation of subgrades and earthwork, compact the material to provide a stable, uniform surface. Compact the subgrade to the required density and stability and show no evidence of displacement or rutting. Provide proof rolling to evaluate the stability of the subgrade and as directed by the Engineer. Accomplish proof rolling with a loaded dump truck with a minimum weight of 10,000 pounds per axle.

B. Compact earthen material in open areas by any of the following methods: compaction equipment, fully loaded ten-wheel trucks, tractor dozers weighing at least 30,000 pounds, or heavy vibratory rollers. In confined areas (including areas within a 45-degree angle extending upward and outward from the base of a wall) and in areas where the use of large equipment is impractical, accomplish compaction by hand-operated vibratory equipment or mechanical tampers. Lift thickness shall not exceed 6 inches (measured before compaction) when hand-operated equipment is used.

C. Within 10 feet of structures: Compact the top 12 inches of existing subgrade and each layer of fill or backfill to a minimum of 95% standard proctor (ASTM D698) at or near its optimum moisture content. See also Section 02316, Structural Excavation, Backfilling and Grading.

D. Embankments (except under roadways), lawn and unimproved areas: Compact the top 6 inches of existing subgrade and each layer of fill or backfill to a minimum of 90% standard proctor (ASTM D698) at or near its optimum moisture content.

E. Beneath building slabs and slabs on grade (except sidewalks): Compact the top 12 inches of existing subgrade (and each layer of fill if applicable) to a minimum of 100% standard proctor (ASTM D698) at or near its optimum moisture content. See also Section 02316, Structural Excavation, Backfilling and Grading.

F. Sidewalks: Compact the top 6 inches of existing subgrade (and each 6-inch layer of fill if applicable) to a minimum of 100% standard proctor (ASTM D698) at or near its optimum moisture content.

G. Roads, paved areas, and roadway embankments: Compact the top 12 inches of existing subgrade and select fill beneath the pavement section to a minimum density of 100% standard proctor (ASTM D698) at or near its optimum moisture content. Compact all other soils to a minimum density of 95% standard proctor.

H. Trenches: See Section 02315, Excavation, Trenching and Backfilling.

I. The moisture content of the material being compacted shall be within a range of 2% below the optimum to a maximum of two percent (2%) above. Adjust the moisture content of the material to maintain the range specified by the addition of water or by aeration.

3.04 SUBGRADES

A. Construct the completed subgrade surface to the lines, grades and cross sections shown on the Drawings or as directed by the Engineer. Correct any irregularities or depressions that develop by loosening and recompacting the material until the surface is smooth and uniform. Provide proof rolling to evaluate the stability of the subgrade and as directed by the Engineer. Should the subgrade be rutted prior to the next phase of construction, reshape and recompact the subgrade without additional compensation to the Contractor.

B. Shaping and compacting of subgrades prior to construction of pavements shall be as specified in other sections of these specifications.

3.05 ROCK AND BOULDER EXCAVATION

A. Excavate and remove rock and boulders to the widths and depths directed by the Engineer. Where the Bid Proposal includes a separate payment for rock and/or boulder removal, excavate and remove overburden and expose the rock to allow the Engineer to measure the rock prior to removal.

B. Do not use explosives for rock or boulder excavation

C. Dispose of all excavated rock and boulders off-site or at a designated location on-site as directed by the Engineer.

3.06 GENERAL FILLING AND BACKFILLING PROCEDURES

A. Place fill and backfill materials in lifts to suit the specified compaction requirements to the lines and grades required, making allowances for settlement and placement of cover materials (i.e., topsoil, sod, etc.). Correct soft spots or uncompacted areas by reworking.

B. Do not place fill or backfill material on frozen surfaces, or on surfaces covered by snow or ice. Fill and backfill material shall be free of snow, ice and frozen earth.

C. Compact each layer of fill to a mass density not less than the minimum density specified. The moisture content of compacted backfill shall be within two percent (2%) (+/-) of the optimum moisture content.

D. Compact fill placed adjacent to structures by means of manually directed power tampers or plate vibrators. Unless otherwise specified or approved by the Engineer, do not operate heavy equipment including backhoe mounted power tampers, vibrating compactors, or manually directed vibratory rollers within 2 feet of any structure. Do not operate towed or self-propelled vibrating rollers (with 4 to 6-foot diameter drums) within 10 feet of any structure. Compaction by means of drop weights operating from a crane or hoist will not be permitted. Maximum layer thickness of fill lift for hand compactors or manually directed power tampers shall not exceed 6 inches.

E. When included in the Project Specifications, the more stringent requirements of Section 02316, Structural Excavation, Backfilling and Grading, for backfilling procedures and compaction limits shall take precedence over the requirements indicated in the previous paragraph.

3.07 FILL AND BACKFILL PROCEDURES

A. Fill and backfill material placed immediately adjacent to and within 10 feet of all structures shall be select fill. Complete all watertightness tests and damp proofing and/or waterproofing prior to placing fill or backfill around structures. Backfill may be placed prior to testing with the approval of the Engineer. Place and compact select fill in even lifts of 6 inches (compacted thickness) uniformly around the structure.

B. Common fill may be used in areas beyond those designated for select fill unless shown or specified otherwise. Place and compact common fill in even lifts having a maximum thickness (measured before compaction) of 12 inches.

C. Fill required beneath building slabs or slabs on grade (except sidewalks) shall be select material or as shown on the Drawings. Place and compact select material in even lifts of 6 inches (compacted thickness) as specified on the plans. On-site material considered for use as select fill beneath building slabs may be submitted to the Engineer for review but shall not imply any obligation of the Engineer to accept it for use in the Work.

3.08 EMBANKMENT FILL PROCEDURES

A. Prior to placing embankment fill materials, remove all organic materials (including peat and loam) and loose inorganic silt material (loess) from areas beneath proposed embankments. If the subgrade slopes are excessive, construct steps in the subgrade to produce a stable, horizontal surface for the placement of embankment materials. Scarify and recompact the existing subgrade to a depth of at least 6 inches before placing the first lift of embankment fill or as directed by the Engineer.

B. Embankment fill shall consist of common fill material, placed, and compacted in even lifts of 12 inches (uncompacted thickness).

C. Rock may be used in embankment fill only with prior, written approval of the Engineer.

3.09 IMPERVIOUS FILL (NOT USED)

3.10 UNDERCUT AND BACKFILL WITH OVERSIZE ROCK

A. Excavate the area to the lines and grades shown on the Drawings, or as directed by the Engineer, and dispose of undercut material in an approved manner. Place soil stabilization (geotextile) fabric within the undercut area by hand and backfill with a minimum of 18 inches of oversize rock. The top 4 to 6 inches of backfill shall be crushed stone or Class 7 base course material. The cost of the topping or choke layer shall be considered incidental to the cost of the oversize rock, and it will not be paid for separately.

B. Accomplish the placement of backfill material from the leading edge of the fill. Haul vehicles will only be allowed on compacted fill material and shall not be allowed with the undercut excavation.

C. Prior to placement of the crushed stone or Class 7 base course, compact and lock together the oversize rock with a minimum of two (2) passes of a vibratory roller or dozer, of weight and size acceptable to the Engineer. Proof roll the finished choke layer and install additional material as necessary to address any resulting wheel ruts.

3.11 GRADING

A. Perform grading to the lines and grades shown on the Drawings. Remove all objectionable material encountered within the limits indicated and dispose of off-site. Provide complete and continuous drainage and dewatering of subgrades throughout the grading process. Install temporary drains, drainage ditches, etc. to intercept or divert surface water that may affect the execution or condition of grading work.

B. If at the time of grading it is not possible to place any material in its proper section of the Work, stockpile the fill material in approved area for later use. No extra payment will be made for the stockpiling or double handling of excavated or borrow material.

C. Stones or rock fragments larger than 4 inches in their greatest dimensions will not be permitted within the top 6 inches of the finished grade of fills and embankments.

D. In cut areas, remove all loose or protruding rocks in slopes to line or finished grade of the slope. Dress all cut and fill slopes in a uniform manner to the grade, cross-section and alignment shown on the Drawings unless otherwise directed by the Engineer.

3.12 DISPOSAL OF UNSUITABLE, WASTE AND/OR SURPLUS EXCAVATED MATERIAL

A. Remove and dispose of unsuitable, waste, and surplus excavated material off-site. Materials may be temporarily stockpiled in an area within the limits of construction that do not disrupt construction activities, create any nuisances or safety hazards, or otherwise restrict access to the site of the Work.

3.13 FIELD TESTING

A. Prior to and during the placement of backfill and fill, coordinate with the soils testing laboratory to perform in-place soil density tests to verify the existing subgrade soil meets the requirements herein. Unless otherwise noted, conduct testing in accordance with the following minimum frequencies:

1. Determine a moisture-density relationship for each type of subgrade, backfill and embankment fill material encountered, and conduct testing in accordance with AASHTO T99 or T180 (ASTM D698 or D1557).

2. Conduct field density and moisture testing of earthwork subgrade in accordance with AASHTO T310 (ASTM D6938). Conduct in-place density and moisture testing at a frequency of one (1) test per 5,000 square-feet of subgrade.

3. Conduct field density and moisture testing of backfill and embankment fill in accordance with AASHTO T310 (ASTM D6938). Conduct in-place density and moisture testing at a frequency of one (1) test per 750 square-yards of area in each lift of embankment. Conduct a minimum of two (2) tests per lift of backfill.

3.14 TOLERANCES

A. Accomplish all grading to the tolerances listed below for the various areas and classes of work as shown on the Drawings. The tolerances listed are maximum variations that will be acceptable for each class of work without exception.

1. Form and compact the subgrade beneath structures to within 0.05 foot of the finished subgrade as established by grade hubs or stakes.

2. Rough grade all areas outside of those mentioned in the previous paragraphs and which do not receive any type of a finished structure to within 0.10 foot of the finished grade after the necessary allowances have been made for the thickness of topsoil. This tolerance shall be reduced as necessary to provide drainage at all points and to prevent the formation of water pockets in the finished grading.

B. Any deviation in excess of the amount shown above shall be corrected by loosening, adding, or removing materials, reshaping and recompacting by sprinkling and rolling.

3.15 TOPSOIL

A. Stockpile topsoil stripped from within the project limits at an off-site location provided by the Contractor unless on-site stockpile areas are designated on the Drawings. Stockpile the topsoil in such a manner that other materials will not become intermixed and interfere with reuse of topsoil. Strip topsoil from the designated areas to a minimum depth of 6 inches unless otherwise indicated on the Drawings.

B. When suitable topsoil is not available on the site, locate and obtain a supply subject to the approval of the Engineer. Notify the Engineer sufficiently in advance of operations in order that necessary measurements and tests can be made. See Section 02920, Seeding, or Section 02921, Sodding, for topsoil material requirements.

C. Immediately prior to dumping and spreading the topsoil on any area, loosen the surface by discing or by other means approved by the Engineer. Loosen the subgrade to a minimum depth of 2 inches to facilitate bonding of the topsoil. Clear the surface of the area of stones 2 inches and larger stones and all litter.

D. Spread the topsoil evenly on the prepared areas to a uniform depth of 4 inches after compaction. Do not spread topsoil when the ground or topsoil is frozen, excessively wet, or otherwise in a condition detrimental to the work. Carry out spreading so that seeding or sodding operations can proceed with a minimum of soil preparation or tilling. After spreading is completed, the topsoil shall be smooth-graded and the surface left at the prescribed grades in an even, properly compacted condition. Prevent the formation of low places or pockets where water will stand on the finished subgrade. Light rolling with placing or spreading equipment and wetting if needed, will be required to consolidate the topsoil to the finished grades.

3.16 SITE RESTORATION

A. Unless otherwise indicated on the Drawings, restore all disturbed areas with seed, lime, fertilizer, and mulch in accordance with Section 02920, Seeding, or Section 02921, Sodding.

END OF SECTION

THIS PAGE INTENTIONALLY LEFT BLANK

SECTION 02316

STRUCTURAL EXCAVATION, BACKFILLING AND GRADING

PART 1 GENERAL

1.01 SCOPE OF WORK

A. Furnish all labor, materials, equipment and incidentals necessary to perform structural excavation work, grading; placement and compaction of backfill and embankment fill; and the removal and disposal of unsuitable, waste and surplus excavation materials.

B. Furnish and install temporary excavation support systems, including sheeting, shoring and bracing, to ensure the safety of personnel and protect adjacent structures, piping, etc., in accordance with federal, state and local laws, regulations and requirements.

C. Provide the services of a licensed professional engineer, registered in the State in which the Work will occur, to prepare temporary excavation support system designs and submittals.

1.02 RELATED SECTIONS

A. Section 01450 – Field Quality Control

B. Section 02100 – Site Preparation

C. Section 02200 – Earthwork

D. Section 02370 – Erosion and Sedimentation Control

E. Section 02921 – Sodding

1.03 REFERENCE STANDARDS

A. American Association of State Highway and Transportation Officials (AASHTO), latest edition:

1. AASHTO M57 Standard Specification for Materials for Embankments and Subgrades

2. AASHTO M145 Standard Specification for Classification of Soils and Soil-Aggregate Mixtures for Highway Construction Purposes

3. AASHTO M146 Standard Specification for Terms Relating to Subgrade, Soil-Aggregate, and Fill Materials.

4. AASHTO T99 Standard Method of Test for Moisture-Density Relations of Soils Using a 2.5-kg (5.5-lb) Rammer and a 305-mm (12-in.) Drop

5. AASHTO T180 Standard Method of Test for Moisture-Density Relations of Soils Using a 4.54-kg (10-lb) Rammer and a 457-mm (18-in.) Drop

6. AASHTO T310 Standard Specification for In-Place Density and Moisture Content of Soil and Soil-Aggregate by Nuclear Methods (Shallow Depth)

B. American Society for Testing and Materials (ASTM), latest edition:

1. ASTM C33 Standard Specification for Concrete Aggregates

2. ASTM D698 Standard Test Methods for Laboratory Compaction Characteristics of Soils Using Standard Effort (12,400 ft-lbf/ft^3 (600 kN-m/m^3))

3. ASTM D1557 Standard Test Methods for Laboratory Compaction Characteristics of Soil Using Modified Effort (56,000 ft-lbf/ft^3 (2,700 kN-m/m^3))

4. ASTM D4318 Standard Test Methods for Liquid Limit, Plastic Limit, and Plasticity Index of Soils

5. ASTM D6938 Standard Test Method for In-Place Density and Water Content of Soil and Soil-Aggregate by Nuclear Methods (Shallow Depth)

C. Occupational Safety and Health Administration (OSHA), latest edition:

1. All excavations and support systems shall conform to applicable OSHA excavation, trenching, and shoring standards that are contained in the U.S. Code of Federal Regulations 29 CFR 1926.650-1926.653, and other federal, state or local requirements. In the event of a conflict, comply with the more restrictive applicable requirements.

2. The current edition of Occupational Safety and Health Administration Standard for Excavation and Trench Safety Systems, 29 CFR 1926, Subpart P, is specifically incorporated and made a part of these specifications and contract documents as required by Arkansas Code Annotated 22-9-212.

1.04 DEFINITIONS

A. Where the phrase "in-the-dry" is used in these Specifications, it shall be defined to mean a soil condition where the in-place moisture content of the soil is no more than two percent (2%) above the optimum moisture content of that soil. The optimum moisture content shall be as determined by the laboratory test of the moisture-density relationship appropriate to the specified level of compaction.

B. Where used in this Specification "structures" refers to all buildings, wet wells, manholes and below grade vaults. Stormwater structures and duct banks are not considered “structures” in this context.

1.05 SUBMITTALS

A. See Section 01300, Submittals for submittal procedures.

B. Submit the proposed methods of construction, including excavation, backfilling and filling, compaction, and designs for excavation support systems for the various portions of the Work. Excavation support system designs shall be prepared by a Professional Engineer, licensed in the state in which the work is located and having a minimum of five (5) years of professional experience in the design and construction of excavation support systems. Review by the Engineer will be for information purposes only. Contractor shall remain responsible for the adequacy and safety of construction means, methods and techniques.

C. Submit the proposed methods of excavation, backfilling and grading for all structures.

D. Submit an excavation and trench safety plan for excavations greater than or equal to 5 feet deep. Submittal of the plan shall be for the Engineer's review for information purposes only. Coordinate with the requirements in Section 02250, Excavation Shoring and Protection.

E. Furnish test data to indicate compliance of all earthwork materials, placement, and compaction methods with this specification, including off-site material proposed for the Project.

1.06 QUALITY ASSURANCE

A. Responsibilities for providing the quality control and quality assurance testing activities are defined in Section 01450, Field Quality Control. Testing frequencies are defined under the paragraph on Field Testing at the end of this Section.

B. Furnish manufacturer or supplier certification for all products and materials from off-site sources for approval by the Engineer. Materials shall include but not be limited to select material, clay and crushed stone. Provide initial material certifications at no additional cost to the Owner.

1.07 PROJECT SITE CONDITIONS

A. Subsurface Conditions

1. The availability and reliability of geotechnical and other subsurface information known to the Owner is defined in Section 00800, Supplementary Conditions. Do not assume that materials other than those disclosed by the soil borings or test pits will not be encountered, or that the proportions or character of the various materials will not vary from those indicated in the geotechnical investigation report. Any conclusions drawn by the Contractor from the investigation report including the character of the materials to be encountered and degree of difficulty to be expected in the performance of the Work are the sole responsibility of the Contractor.

2. The Contractor is encouraged to perform an independent subsurface investigation. Coordinate access to the site with the Owner.

3. No claim for extra compensation or extension of time will be considered because of any variation in site, soil, or water conditions described in the geotechnical report to that encountered during construction.

1.08 COORDINATION

A. Coordinate the work of this Section with the work of other sections. Verify at the site both the dimensions and work of other trades adjoining items of work in this Section before commencement of items herein specified.

B. Furnish to the pertinent trades all items included under this Section that are to be built into the work of other sections.

1.09 FIELD MEASUREMENTS

A. Take field measurements at the site to verify or supplement indicated dimensions and to ensure proper coordination of all other construction items.

PART 2 PRODUCTS

2.01 COMMON FILL

A. Common Fill: Soil material substantially free of organic materials, topsoil, wood, peat, loam, trash, or other objectionable materials that may be compressible through decomposition or that may not be properly compacted. Common fill shall not contain rocks or stones larger than 4 inches in the largest diameter and shall have a maximum of 75% passing the No. 40 sieve and a maximum of 20% passing the No. 200 sieve. Common fill shall have a maximum liquid limit of 45 and a maximum plasticity index (PI) of 25 (per ASTM D4318).

B. Common fill shall not contain granite blocks, broken concrete, masonry rubble or other similar materials. It shall have physical properties such that it can be readily spread and compacted during filling. Snow, ice and frozen soil are not permitted. Subject to the Engineer's approval, native material (excluding sandy, lean clay) conforming to these requirements may be used as common fill.

2.02 SELECT BACKFILL

A. Select Backfill: Select backfill must be free of sod, stumps, logs, roots, or other perishable or deleterious matter. It shall be a granular material with a maximum particle size of 3 inches, well-graded from coarse to fine. The select material shall conform to AASHTO classification A-1, A-2-4 or A-2-5, or with the Engineer's approval, a sandy or gravely clay conforming to classification A-2-6 or A-6. The following additional restrictions apply:

1. Select backfill material classified as AASHTO A-2-6 may be submitted for review and evaluation by the Engineer provided that it has a plasticity index less than 15

2. Select backfill material classified as AASHTO A-6 may be submitted for review and evaluation by the Engineer provided that it has a plasticity index less than 15.

3. Evaluation of A-2-6 or A-6 material shall not imply any obligation of the Engineer to accept it for use in the Work.

4. Crusher screenings, including nepheline syenite granite fines (Donna Fill®) will not be allowed as select fill or backfill material.

5. The Contractor shall furnish certified test results to indicate compliance of select material from off-site stockpiles with this specification at no additional cost to the Owner.

6. Select backfill with more than 30 percent (30%) retained on a No. 4 sieve may be tested in accordance with ASTM D1557.

2.03 CRUSHED AGGREGATE (COARSE DRAIN FILL)

A. Coarse Drain Fill: Crushed aggregate shall be well graded, hard, durable, angular or subangular particles ranging from 3/4-inch maximum diameter to the No. 4 sieve. Unless otherwise approved by the Engineer, the material shall meet the requirements of ASTM C33, Gradation 67 for coarse aggregate.

PART 3 EXECUTION

3.01 PREPARATION

A. Test Pits

1. Perform exploratory excavation work (test pits) for the purpose of verifying the location of underground utilities and structures and to check for unknown utilities and structures, prior to commencing excavation work.

2. Backfill test pits as soon as the desired information has been obtained. Stabilize backfilled surfaces in accordance with approved erosion and sedimentation control plans (see Section 02370, Erosion and Sedimentation Control).

B. Dewatering and Drainage Systems

1. Temporary dewatering and drainage systems shall be in place and operational prior to beginning excavation work (see Section 02140, Dewatering and Drainage).

3.02 EXCAVATION SUPPORT

A. Furnish, install, monitor, and maintain excavation support (e.g., shoring, sheeting, bracing, trench boxes, etc.) as required by federal, state, or local laws, ordinances, regulations and safety requirements. Support the sides of excavation, to prevent any movement that could in any way reduce the width of the excavation below that necessary for proper construction and protect adjacent structures from undermining, settlement, or other damage. Take care to prevent the formation of voids outside of sheeting. If voids occur behind sheeting, immediately backfill and compact the voids with common fill material. Fill voids in locations that cannot be properly backfilled and compacted with lean concrete or as indicated by the Engineer.

B. Install excavation supports outside the neat lines of foundations. Supports shall be plumb and securely braced and tied in position. Excavation support shall be adequate to withstand all pressures to which the supports will be subjected. Correct any movement or bulging of supports to provide the necessary clearances, dimensions and structural integrity.

C. Excavation Supports Left in Place

1. Excavation supports that are required to remain in place, if applicable, are indicated on the Drawings.

2. The Owner or Engineer may direct that certain excavation supports remain in place or be cut off at any specific elevation. If the Contractor believes that such a directive increases Contractor's cost and would thereby entitle Contractor to a change in Contract cost, Contractor shall notify the Engineer in accordance with Article 11 in the General Conditions pertaining to changes in the Work.

3. The right of the Owner or Engineer to direct that certain excavation supports remain in place shall not be construed as creating any obligation on the Owner or Engineer to give such direction. Furthermore, failure by the Owner or Engineer to give such direction shall not relieve the Contractor from liability for damages to persons or property occurring from or upon the work occasioned by negligence or otherwise, growing out of a failure on the part of the Contractor to leave in place sufficient excavation supports to prevent any movement of the ground or damage to adjacent structures.

D. Remove excavation supports carefully and in such manner so as not to endanger the Work or other adjacent structures, utilities, or property. Fill all voids left or caused by withdrawal of supports immediately with lean concrete or as directed by the Engineer.

3.03 STRUCTURAL EXCAVATION PROCEDURES

A. Excavations for structures shall be suitably wide for construction of the structures including excavation supports, dewatering and drainage systems, and working clearances.

B. Perform excavation in-the-dry and accomplish such by methods that preserve the undisturbed state of subgrade soils. Drainage and dewatering systems shall be in place and operational prior to beginning excavation work. In no case shall the earth be plowed, scraped or excavated by any means so near to the finished subgrade that would disturb the finished subgrade. Hand excavation of the final 3 to 6 inches may be required to obtain a satisfactory, undisturbed subgrade. Remove subgrade soils that become soft, loose, "quick", or otherwise unsatisfactory for support of structures because of inadequate excavation, dewatering, or other construction methods. Replace subgrade material with crushed stone, subject to prior approval by the Engineer, and at no additional cost to the Owner.

C. Subgrade Preparation: Unless otherwise shown on the Drawings, compact the subgrade for all structures as follows:

1. Compact the top 12 inches of subgrade to a minimum of 100% standard proctor in accordance with AASHTO T99 (ASTM D698).

2. Where structures are supported by piles or drilled shaft piers, compact the top 12 inches of subgrade to a minimum of 95% standard proctor in accordance with AASHTO T99 (ASTM D698).

3. Where existing subgrade contains a significant amount of clay or cohesive soils, over-excavate sufficiently below the bottom of the structure, and place a 6-inch minimum working mat of crushed stone or lean concrete. Prior to placement of the working mat, compact the top 12 inches of existing subgrade to a minimum of 100% standard proctor in accordance with AASHTO T99 (ASTM D698).

D. When excavations have reached the required subgrade, including any allowances for working mats or base materials, and prior to the placement of working mats or base materials, the Contractor shall notify the soils testing laboratory to verify the suitability of the existing subgrade soils for the anticipated foundation and structural loadings. When directed by the Engineer, the Geotechnical Engineer shall inspect the subgrade for conformance with the specified subgrade preparation requirements. If the existing subgrade soils are determined to be unsuitable, the Engineer will provide direction regarding removal and replacement with suitable materials. If Contractor believes that such a directive increases Contractor's cost and would thereby entitle Contractor to a change in Contract cost, Contractor shall notify the Engineer in accordance with Article 11 in the General Conditions pertaining to changes in the Work.

E. Over-excavation beyond the limits and depths required by the Contract Documents shall be replaced at no additional cost to the Owner by bedding rock or other approved material subject to the prior approval of the Engineer.

3.04 GENERAL FILLING AND BACKFILLING PROCEDURES

A. Place fill and backfill materials in lifts to suit the specified compaction requirements to the lines and grades required, making allowances for settlement and placement of cover materials (i.e., topsoil, sod, etc.). Correct soft spots or uncompacted areas by reworking.

B. Do not place fill and backfill materials on frozen surfaces, or surfaces covered by snow or ice. Fill and backfill material shall be free of snow, ice and frozen earth.

C. Compact each layer of fill to a mass density not less than the minimum density specified. The moisture content of compacted backfill shall be within two percent (2%) (+/-) of the optimum moisture content.

D. Compact fill placed adjacent to structures by means of manually directed power tampers or plate vibrators. Unless otherwise specified or approved by the Engineer, do not operate heavy equipment including backhoe mounted power tampers, vibrating compactors, or manually directed vibratory rollers within 2 feet of any structure. Do not operate towed or self-propelled vibrating rollers (with 4 to 6-foot diameter drums) within 10 feet of any structure. Compaction by means of drop weights operating from a crane or hoist will not be permitted. Maximum layer thickness of fill lift for hand compactors or manually directed power tampers shall not exceed 6 inches.

3.05 FILL AND BACKFILL PROCEDURES

A. Fill and backfill material placed immediately adjacent to and within 10 feet of all structures shall be select fill. Complete all watertightness tests and damp proofing and/or waterproofing prior to placing fill or backfill around structures. Backfill may be placed prior to testing with the approval of the Engineer. Place and compact select fill in even lifts of 6 inches (compacted thickness) uniformly around the structure.

B. Common fill may be used in areas beyond those designated for select fill unless shown or specified otherwise. Place and compact common fill in even lifts having a maximum thickness (measured before compaction) of 12 inches.

C. Fill required beneath building slabs or slabs on grade (except sidewalks) shall be select backfill, or as shown on the Plans. Place and compact structural fill in even lifts of 6 inches (compacted thickness).as specified on the plans. On-site material considered for use as select fill beneath building slabs may be submitted to the Engineer for review but shall not imply any obligation of the Engineer to accept it for use in the Work.

3.06 EMBANKMENT FILL PROCEDURES

A. Prior to placing embankment fill materials, remove all organic materials (including peat and loam) and loose inorganic silt material (loess) from areas beneath the proposed embankments. If the subgrade slopes are excessive, construct steps in the subgrade to produce a stable, horizontal surface for the placement of embankment materials. Scarify and recompact the existing subgrade to a depth of at least 6 inches before placing the first lift of embankment fill or as directed by the Engineer.

B. Embankment fill shall consist of common fill material, placed and compacted in even lifts of 12 inches (compacted thickness).

C. Rock may be used in embankment fill only with prior, written approval of the Engineer.

3.07 IMPERVIOUS FILL

A. Place impervious fill in controlled, even lifts having a maximum thickness (measured before compaction) of 6 inches. Compaction shall be sufficient to attain a permeability of less than $1x10^{-7}$ centimeter/second.

B. Maintain the moisture content of impervious fill during placement and compaction at or near its optimum moisture content (up to plus 3%).

3.08 SOIL COMPACTION

A. Within 10 feet of structures: Compact the top 12 inches of existing subgrade and each layer of fill or backfill to a minimum of 95% standard proctor (ASTM D698) at or near its optimum moisture content.

B. Embankments (except under roadways), lawn and unimproved areas: Compact the top 6 inches of existing subgrade and each layer of fill or backfill to a minimum of 95% standard proctor (ASTM D698) at or near its optimum moisture content.

C. Beneath building slabs and slabs on grade (except sidewalks): Compact the top 12 inches of existing subgrade (and each layer of fill if applicable) to a minimum of 100% standard proctor (ASTM D698) at or near its optimum moisture content, or to the density specified on the Drawings.

D. Sidewalks: Compact the top 6 inches of existing subgrade (and each 6-inch layer of fill if applicable) to a minimum of 100% standard proctor (ASTM D698) at or near its optimum moisture content.

E. Roads, paved areas and roadway embankments: Compact the top 12 inches of existing subgrade and each layer of fill or backfill to a minimum of 100% standard proctor (ASTM D698) at or near its optimum moisture content.

F. The moisture content of the material being compacted shall be within a range of two percent (2%) below the optimum to a maximum of two percent (2%) above. Adjust the moisture content of the material to maintain the range specified by the addition of water or by aeration.

3.09 DISPOSAL OF UNSUITABLE, WASTE AND/OR SURPLUS EXCAVATED MATERIAL

A. Remove and dispose of unsuitable, waste and surplus excavated material off-site. Materials may be temporarily stockpiled in an area within the limits of construction that do not disrupt construction activities, create any nuisances or safety hazards, or otherwise restrict access to the site of the Work.

3.10 GRADING

A. Perform grading to the lines and grades shown on the Drawings. Remove all objectionable material encountered within the limits indicated and dispose of off-site. Provide complete and continuous drainage and dewatering of subgrades throughout the grading process. Install temporary drains, drainage ditches, etc., to intercept or divert surface water that may affect the execution or condition of grading work.

B. If at the time of grading it is not possible to place any material in its proper section of the Work, stockpile the fill material in approved areas for later use. No extra payment will be made for the stockpiling or double handling of excavated or borrow material.

C. Stones or rock fragments larger than 4 inches in their greatest dimensions will not be permitted within the top 6 inches of the finished grade of fills and embankments.

D. In cut areas, remove all loose or protruding rocks in slopes to the line or finished grade of the slope. Dress all cut and fill slopes in a uniform manner to the grade, cross-section and alignment shown on the Drawings unless otherwise directed by the Engineer.

3.11 FIELD TESTING

A. Prior to and during placement of backfill and embankment fill, coordinate with the soils testing laboratory to perform in-place soil density to verify the existing subgrade soil meets the requirements herein. Unless otherwise noted, conduct testing in accordance with the following minimum frequencies:

1. Determine a moisture-density relationship for each type of subgrade and backfill materials encountered, and conduct testing in accordance with AASHTO T99 or T180 (ASTM D698 or D1557).

2. Conduct field density and moisture testing of earthwork subgrade below all structures in accordance with AASHTO T310 (ASTM D6938). Unless otherwise indicated, in-place density and moisture testing frequency shall be one (1) test per 3,000 square-feet of subgrade.

3. Conduct field density and moisture testing of structural backfill in accordance with AASHTO T310 (ASTM D6938). Unless otherwise indicated, in-place density and moisture testing frequency shall be one (1) test per 3,000 square-feet of area in each lift of embankment.

4. Conduct permeability testing for clay and other modified soil liner using a certified soil testing laboratory. Unless otherwise indicated, the permeability of the liner shall be less than 1.0×10^{-7} cm/sec.

END OF SECTION

SECTION 02370

EROSION AND SEDIMENTATION CONTROL

PART 1 GENERAL

1.01 SCOPE OF WORK

A. Furnish all labor, materials, equipment, and incidentals; and install, maintain, remove, and clean up erosion and sedimentation controls as shown on the Drawings and as specified herein.

B. The work shall include installation of temporary access ways and staging areas, silt fences, ditch checks, sediment removal and disposal, erosion control device maintenance, removal of temporary erosion control devices, temporary mulching, excelsior matting installation, and final cleanup.

C. The Drawings include typical erosion and sedimentation control details for the Contractor's convenience and do not relieve him from installing different or additional devices where required to properly protect the site.

D. For construction sites in Arkansas with more than one (1) acre and less than five (5) acres disturbed by construction activity, the Owner will prepare, and the Contractor will post a Construction Site Notice for Automatic Coverage authorized under NPDES Permit No. ARR150000. The Construction Site Notice shall be placed and maintained in a prominent location at the construction site for public viewing before commencement of construction.

E. For construction sites in Arkansas with more than five (5) acres disturbed by construction activity, the Owner will file a Notice of Intent (NOI) for Discharges of Storm Water Associated with Large Construction Activity authorized under NPDES Permit No. ARR150000 with the Arkansas Department of Environmental Quality (ADEQ). The Contractor shall post and maintain a Notice of Coverage (NOC) in a prominent location at the construction site for public viewing before commencement of construction.

1.02 RELATED SECTIONS

A. Section 02100 – Site Preparation

B. Section 02200 – Earthwork

C. Section 02316 – Structural Excavation, Trenching and Backfilling

D. Section 02501 – Pavement and Drainage Improvements

E. Section 02921 – Sodding

1.03 REFERENCE STANDARDS

A. Arkansas State Highway and Transportation Department – Standard Specifications for Highway Construction, latest edition.

1.04 DEFINITIONS

A. Best Management Practices (BMPs): Schedules of activities, prohibitions of practices, maintenance procedures, and other management practices to prevent or reduce the pollution of waters of the State. BMPs also include treatment requirements, operating procedures, and practices to control plant site runoff, spillage or leaks, sludge or waste disposal, or drainage from raw material storage.

1.05 SUBMITTALS

A. See Section 01300, Submittals for submittal procedures.

B. For all construction projects involving sites of one (1) acre or greater the Contractor shall:

1. Prior to the start of construction, submit a schedule for installing temporary and permanent erosion control work. Work shall not commence until the Engineer approves the erosion control schedule and methods of operation.

2. Sign and return three (3) copies of the Stormwater Pollution Prevention Plan (SWP3) to the Engineer. Designate a qualified inspector responsible for performing inspections as specified in the SWP3.

3. Submit any amendments as necessary to the SWP3 to prevent sediment from leaving the construction site.

1.06 QUALITY ASSURANCE

A. Install and maintain all sedimentation control devices, including accepted Best Management Practices (BMPs), necessary to prevent the movement of sediment from the construction site to off-site areas or into the stream system via surface runoff or underground drainage systems. Install measures in addition to those shown on the Drawings as necessary to prevent the movement of sediment off-site and as directed by the Engineer. Maintain, remove and clean up sedimentation devices at no additional cost to the Owner.

B. Sedimentation and erosion control measures shall conform to the requirements of the SWP3.

1.07 REGULATORY REQUIREMENTS

A. Implement the SWP3 according to the requirements of the General Permit.

B. Do not discharge pollutants such as chemicals, fuels, lubricants, asphalt, raw sewage, concrete drum wash water, and other harmful waste into or alongside any waters of the United States. Dispose of these pollutants in accordance with governing State and Federal regulations and in accordance with the SWP3 and the General Permit.

1.08 COORDINATION

A. Coordinate the work of this Section with the work of other sections. Verify at the site both the dimensions and work of other trades adjoining items of work in this Section before commencement of items herein specified.

B. Furnish to the pertinent trades all items included under this Section that are to be built into the work of other sections.

1.09 FIELD MEASUREMENTS

A. Take field measurements at the site to verify or supplement indicated dimensions and to ensure proper coordination of all other construction items.

PART 2 PRODUCTS

2.01 MATERIALS

A. Crushed stone for sediment filtration devices, driveway and access ways, and staging areas: Hard, durable, crushed stone, 1 1/2-inch to 6-inch conforming to the Arkansas State Highway and Transportation Department Standard Specification for Stone Backfill.

B. Rock ditch check rip-rap: Sound, durable rock, roughly rectangular in shape conforming to following:

1. Well graded within the following limits.

Weight of Stone	Percent Finer by Weight
40 lbs	100%
12 lbs	50%
3 lbs	0%

2. Free of rounded stones, boulders, sandstone or similar soft stone.

3. Free of overburden, spoil, shale and organic material.

C. Silt fence: Prefabricated commercial product made of woven polypropylene, ultraviolet resistant material similar to Mirafi Silt Fence by TenCate Mirafi, Inc. or approved equal.

D. Filter box mesh: 1/4-inch galvanized steel woven wire mesh or hardware cloth.

E. Straw mulch: Threshed straw of oats, wheat, barley, or rye, free of noxious weeds, mold or other objectionable material. Straw mulch shall contain at least 50% by weight of material that is 10-inch or longer. Provide straw in an air-dry condition, suitable for placement with blower equipment.

F. Straw mulch tackifier: Commercial product of latex acrylic copolymer or an organic tackifier, specifically manufactured for use with straw mulch.

G. Erosion control blanket: 100% agricultural straw matrix, stitch bonded with degradable thread between two (2) photobiodegradable polypropylene nettings, similar to Model S150 Double Net Short-Term Blanket by North American Green or approved equal.

PART 3 EXECUTION

3.01 GENERAL

A. Comply with the requirements of the Federal Clean Water Act; the Arkansas Water and Air Pollution Control Act 472, as amended; and the regulations, orders, or decrees issued pursuant thereto. In case of conflict between these regulations, orders, or decrees and the provisions shown on the construction plans, the more restrictive requirements shall apply.

B. The National Pollutant Discharge Elimination System (NPDES) requires permit coverage in order to discharge storm water associated with construction sites into waters of the United States. This coverage within Arkansas is obtained under ADEQ General Permit ARR150000.

C. The Owner will file a Notice of Intent (NOI) and develop a Storm Water Pollution Prevention Plan (SWP3) for construction sites of five (5) acres or greater. The Contractor shall Implement the SWP3 according to the requirements of the General Permit and be prepared to install, construct, repair, and maintain erosion and sedimentation control items throughout the contract period. When the project site is stabilized per the requirements of the NPDES General Permit, the Contractor shall provide written notice to the Owner. Once the site is deemed stabilized, the Owner will file the required Notice of Termination (NOT).

D. Operations performed by the Contractor on lands located outside the proposed areas of disturbance or project limits such as borrow pits, plant sites, waste sites or other facilities, may require separate coverage under NPDES permit and shall be the responsibility of the Contractor.

E. If the Contractor fails to properly maintain, install, or construct erosion and sedimentation control items, the Owner may take the following actions: cessation of the Work, withholding of Contractor payments, suspension of the project, or default of the Contractor.

F. Additional erosion and sedimentation control work required due to Contractor negligence, carelessness, or failure to install permanent controls as scheduled, shall be performed by the Contractor at no additional cost to the Owner. In addition, the Contractor may be assessed damages resulting from negligence in complying with the SWP3 at the rate assessed against the Owner by the permitting authority.

G. The work and measures associated with erosion and sedimentation control shall include but not be limited to the following best management practices (BMPs).

1. Staging of Earthwork Activities: Schedule excavation and moving of soil materials so that the smallest possible areas will be unprotected and subject to possible erosion for the shortest time feasible.

2. Mulching: Apply mulch to provide temporary protection to soil surfaces from erosion.

3. Solid Sod: Install solid bermuda sod as needed for temporary erosion control.

4. Diversions: Grade ditches to divert water away from work areas and/or to collect runoff from work areas for treatment and safe disposal.

5. Stream Crossings: Install culverts or bridges where equipment must cross streams.

6. Sediment Basins: Construct sediment basins to settle and filter out sediment from eroding areas to protect properties and streams below the construction site.

7. Baled Straw Filter Barriers: Install temporary baled straw filter barriers to protect drainage inlets and junction boxes and trap sediment in ditches from areas of limited runoff. Remove bales when permanent measures are installed.

8. Waterways: Utilize waterways for the safe disposal of filtered runoff from fields, diversions and other structures or measures.

H. Install and monitor a rain gauge on the construction site. Maintain a daily record of rainfall amounts.

I. Maintain a signed copy of the SWP3 at the jobsite throughout the contract period.

3.02 INSTALLATION

A. Install silt fences as shown on the Drawings and in accordance with the manufacturer's recommendations. Position silt fences to prevent offsite movement of sediment produced by construction activities.

B. Prior to setting the access casting, install filter boxes on drainage inlets and junction boxes as shown on the Drawings and in accordance with the manufacturer's recommendations.

C. As an alternative to filter boxes, install baled straw filter barriers surrounded by silt fence around drainage inlets and junction boxes as shown on the Drawings and prior to setting the access casting.

D. Install rock ditch checks across stream and drainage channels just below a sandbag wall and as shown on the Drawings.

E. Install stabilized construction entrances with 6 inches (minimum) of crushed stone as shown on the Drawings.

F. Install 4 inches (minimum) crushed stone surface on staging areas and other access ways as shown on the Drawings.

G. The above requirements shall be in place prior to the initiation of construction activities.

3.03 MAINTENANCE AND INSPECTIONS

A. Inspections

1. Visually inspect all erosion and sedimentation control devices in accordance with the SWP3 and promptly after every 1/2-inch or greater rainstorm. If such inspection reveals that additional measures are needed to prevent movement of sediment to off-site areas, promptly install additional devices as needed and note any corrective measures on the inspection form in the SWP3.

2. Promptly repair sediment controls in need of maintenance within the time frame established in the SWP3.

B. Device Maintenance

1. Silt Fences

a. Remove accumulated sediment once it builds up to 50% of the height of the fabric.

b. Replace damaged fabric, or patch with a 2-ft. minimum overlap.

c. Make other repairs as necessary to ensure that the fence is filtering all runoff directed to the fence.

2. Filter Boxes

a. Replace crushed stone when it becomes saturated with silt.

3. Rock Ditch Check

a. Muck out trapped silt from dewatering operations when it has built up to within 6 inches of the top of the berm.

b. Replace crushed stone filter when saturated with silt.

4. Add crushed stone to driveway entrances, access ways, and staging areas as necessary to maintain a firm surface free of ruts and mudholes.

3.04 TEMPORARY MULCHING

A. Apply temporary mulch and seed to areas where rough grading has been completed but final grading is not anticipated to begin within 14 days of the completion of rough grading.

B. Apply straw mulch at the rate of 100 lbs/1,000 square feet and tackify with latex acrylic copolymer at a rate and diluted in a ratio per manufacturer’s instructions.

3.05 EROSION CONTROL BLANKETS

A. Install erosion control blankets in all seeded drainage swales and ditches as shown on the Drawings and as directed by the Engineer in accordance with manufacturer's instructions. Finish grade, fertilize and seed the area before the blanket is applied.

B. Unroll the blanket such that the netting is on top and the fibers in contact with the soil over the entire area. Lap the blankets in the direction of water flow and staple. Place blankets in a minimum of three rows wide (4 feet each for a total width of 12 feet) within the drainage swale/ditch and staple together in accordance with manufacturer's instructions. Overlap blanket side edges a minimum of 4 inches.

C. To secure the blankets, install staples made of wire, 0.091-inch in diameter or greater, "U" shaped with legs 10 inches in length, and with a 1 1/2-inch crown. Commercial biodegradable stakes may also be used with prior approval by the Engineer. Drive the staples vertically into the ground, spaced approximately 2 linear feet apart, on each side of the blanket, and one (1) row in the center alternately spaced between each side.

D. Bury the upper and lower ends of the matting to a depth of 4 inches in a trench. Create erosion stops every 25 feet by making a fold in the fabric and carrying the fold into a slit trench across the full width of the blanket. The bottom of the fold shall be 4 inches below the ground surface. Staple on both sides of the fold.

E. Where the matting must be cut or more than one roll length is required in the swale, turn down upper end of downstream roll into a slit trench to a depth of 4 inches. Overlap the lower end of the upstream roll 4 inches past the edge of the downstream roll and staple.

F. To ensure full contact with soil surface, roll matting with a roller weighing 100 lbs/ft. of width perpendicular to flow direction after seeding, mat placement, and stapling. Thoroughly inspect channel after completion. Correct any areas where matting does not present a smooth surface in full contact with the soil below.

3.06 SPILL PREVENTION

A. In the event that spills occur that are the direct result of the Contractor's actions or negligence, the cleanup and reporting of the spill shall be performed by the Contractor at no cost to the Owner.

1. Petroleum Products: Monitor all on-site vehicles for leaks and provide regular preventative maintenance to vehicles and equipment to reduce the chance of petroleum leakage on the project site. Store petroleum products in tightly sealed containers that are clearly labeled. Apply all asphalt substances according to the manufacturer's recommendations and/or these specifications.

2. Fertilizers: Apply fertilizers only in the manner and amounts required by the specifications. Store materials in a covered area and do not expose to precipitation. Remove and dispose of partially used fertilizer bags properly.

3. Paints and Solvents: Store all paint and solvent in tightly sealed containers when not required for use. Remove and dispose of excess material and waste according to the manufacturer's instructions and/or State and Federal Regulations.

4. Concrete Trucks: Direct concrete trucks to discharge surplus concrete or drum wash water on site only in concrete washout areas designated on the construction plans or SWP3.

5. Concrete Curing Agents: Apply concrete curing agents only in the manner and amount required by the specifications. Do not allow excess material to run off the areas being treated.

6. Off-site Sediment Control: Minimize off-site sediment transportation by limiting vehicle tracking and dust generation. The development and implementation of a dust control plan and off-site vehicle tracking plan will be the responsibility of the Contractor and shall be in accordance with the specifications.

3.07 REMOVAL AND FINAL CLEANUP

A. Once the site has been fully stabilized against erosion, remove sediment control devices and all accumulated silt. Dispose of silt and waste materials in a proper manner. Regrade all areas disturbed during this process and stabilize against erosion with surfacing materials as indicated on the Drawings.

B. Provide written notice to the Owner that the site has been stabilized in accordance with the SWP3 and the General Permit prior to removing temporary sediment control devices.

3.08 MAINTENANCE, REMOVAL AND RESTORATION

A. Maintain all pollution control measures and works in a functional condition as long as needed during the construction operation. Remove all temporary measures and restore the site to as nearly original conditions as practicable.

B. If the construction site cannot be fully stabilized because of the nature of the work or if the site is part of a larger common plan (i.e., residential or commercial subdivisions), the Owner will assume maintenance and inspection requirements beyond the contract period to ensure compliance with the General Permit. This does not relieve the Contractor from installing, constructing, and maintaining erosion and sedimentation control items through the contract period.

3.09 MEASUREMENT AND PAYMENT

A. Measurement and payment for erosion and sedimentation control will be specified in the bid documents. If no method of payment is specifically included in the bid proposal, all work associated with Erosion and Sedimentation Control will be considered incidental to the Work and will not be paid for separately.

END OF SECTION

SECTION 02501

PAVEMENT AND DRAINAGE IMPROVEMENTS

PART 1 GENERAL

1.01 SCOPE OF WORK

A. Furnish all labor, materials, equipment and incidentals required; and construct or reconstruct streets, parking lots or other paved areas so designated on the Drawings, including drainage improvements. The Drawings identify the right-of-way limits available for construction.

B. This project includes installation of piping and other improvements requiring the demolition of paved asphalt surfaces. Sawcut trench edges through paved areas in straight lines to achieve a consistent repair width. The Drawings include details for slurry and gravel backfill and repair of trenches. All gravel repairs within paved areas shall conform to the specifications for Base Course.

1.02 RELATED SECTIONS

A. Section 01450 – Field Quality Control

B. Section 02100 – Site Preparation

C. Section 02200 – Earthwork

D. Section 02316 – Structural Excavation, Backfilling and Grading

E. Section 02370 – Erosion and Sedimentation Control

F. Section 02921 – Sodding

G. Section 03100 – Concrete Formwork

H. Section 03200 – Concrete Reinforcement

I. Section 03250 – Concrete Joints and Joint Accessories

J. Section 03300 – Cast-In-Place Concrete

K. Section 03350 – Concrete Finishes

1.03 REFERENCE STANDARDS

A. American Association of State Highway and Transportation Officials (AASHTO), latest edition:

1. AASHTO M 57 Standard Specification for Materials for Embankments and Subgrades

2. AASHTO M 145 Standard Specification for Classification of Soils and Soil-Aggregate Mixtures for Highway Construction Purposes

3. AASHTO M 146 Standard Specification for Terms Relating to Subgrade, Soil Aggregate, and Fill Materials

4. AASHTO T 2 Standard Method of Test of Sampling of Aggregate

5. AASHTO T 27 Standard Method of Test for Sieve Analysis of Fine and Course Aggregates

6. AASHTO T 30 Standard Method of Test for Mechanical Analysis of Extracted Aggregate

7. AASHTO T 96 Standard Method of Test for Resistance to Degradation of Small-Size Coarse Aggregate by Abrasion and Impact in the Los Angeles Machine (**INACTIVE**)

8. AASHTO T 99 Standard Method of Test for Moisture-Density Relations of Soils Using a 2.5 kg [5.5 lb.] Rammer and a 305 mm [12 in.] Drop

9. AASHTO T 104 Standard Method of Test for Soundness of Aggregate by Use of Sodium Sulfate or Magnesium Sulfate

10. AASHTO T 164 Standard Method of Test for Quantitative Extraction of Asphalt Binder from Hot-Mix Asphalt (HMA)

11. AASHTO T 166 Standard Method of Test for Bulk Specific Gravity (Gmb) of Compacted Hot-Mix Asphalt (HMA) Using Saturated Surface-Dry Specimens

12. AASHTO T 167 Standard Method of Test for Compressive Strength of Hot-Mix Asphlt Mixtures

13. AASHTO T 168 Standard Method of Test for Sampling Bituminous Paving Mixtures

14. AASHTO T 180 Standard Method of Test for Moisture-Density Relations of Soils Using a 4.54 kg [10 lb.] Rammer and a 457 mm [18 in.] Drop

15. AASHTO T 198 Standard Method of Test for Splitting Tensile Strength of Cylindrical Concrete Specifications

16. AASHTO T 209 Standard Method of Test for Theoretical Maximum Specific Gravity (Gmm)of and Density of Hot-Mix Asphalt (HMA)

17. AASHTO T 230 Standard Method of Test for Determining Degree of Pavement Compaction of Bituminous Aggregate Mixtures (**INACTIVE**)

18. AASHTO T 280 Standard Method of Test for Concrete Pipe, Manhole Sections, or Tile

19. AASHTO T 310 Standard Method of Test for In-Place Density and Moisture Content of Soil and Soil-Aggregate by Nuclear Methods (Shallow Depth)

B. American Society for Testing and Materials (ASTM), latest edition

1. ASTM C76 Specification for Reinforced Concrete Culvert, Storm Drain, and Sewer Pipe

C. Arkansas Department of Transportation (ARDOT) :

1. Standard Specifications for Highway Construction, latest edition.

1.04 SUBMITTALS

A. See Section 01300 – Submittals, for submittal procedures.

B. Furnish test data to indicate compliance with the following:

1. Source and classification of Select Backfill Material,

2. In-place density of pavement subgrade,

3. Gradation and mechanical properties of base course material,

4. In-place density of base course and bituminous surface course,

5. Classification of drainage pipe,

6. Compressive strength test results of concrete.

C. Certify the Contractor is not associated with the independent testing laboratory nor does the Contractor or its officers have a beneficial interest in the laboratory.

D. Provide the qualifications of independent testing laboratory, including name and address. Laboratories affiliated with the Contractor or in which the Contractor or its officers have a beneficial interest are not acceptable.

1.05 QUALITY ASSURANCE

A. Responsibilities for providing the following quality assurance testing activities are defined in Section 01450, Field Quality Control.

B. Furnish manufacturer or supplier certification for all products and materials. Coordinate with the Engineer the testing of all materials from off-site sources including select and base course materials.

C. Unless otherwise noted, conduct testing in accordance with the following minimum frequencies:

1. Determine a moisture-density relationship for each type of subgrade and aggregate base course material encountered or provided, and conduct testing in accordance with AASHTO T 99 or T 180.

2. Test all aggregates for base course and bituminous mixtures for wear, soundness and gradation in accordance with AASTHO T 96, T 104, T 27 (base course), T 30 (bituminous mixture), respectively. Conduct a minimum of one (1) test each to determine the characteristics of each type of aggregate proposed for the project.

3. Conduct field density and moisture testing of pavement subgrade in accordance with AASHTO T 310. Test in-place density and moisture at a frequency of one (1) test per 5,000 square-feet of subgrade.

4. Compact base course to a density of not less than 95 percent (95%) of theoretical density. Conduct field density and moisture testing of aggregate base course in accordance with AASHTO T 310. Test in-place density and moisture at a frequency of one (1) test per 5,000 square-feet of base course.

5. Test bituminous mixtures for maximum specific gravity, extraction and gradation in accordance with AASHTO T 209, T 164 and T 30, respectively. Conduct bitumen extraction and sieve analysis of extracted aggregate at a frequency of one (1) test each per 300 tons of asphalt surface course.

6. Compact finished asphalt surface courses to a density of not less than 92 percent (92%) of theoretical density. Collect samples for the determination of density from the finished pavement by coring and test for bulk specific gravity in accordance with AASHTO T 166. The testing laboratory taking such samples shall repair the cuts in a manner agreeable to the Owner and the Engineer. Test in-place thickness and density at a frequency of one (1) test each per 400 linear-feet of pavement and at least one (1) each per street.

7. Conduct sampling and testing of concrete curb and gutter in accordance with Section 03300 Cast-in-Place Concrete. Test concrete for slump, temperature and air content at delivery at a frequency of one (1) per 500 linear-feet of curbing, a minimum of one (1) each per day. Cast one (1) set of cylinders for compression testing every 500 linear-feet of curbing, a minimum of one (1) set per day.

8. Conduct sampling and testing of concrete ditch paving in accordance with Section 03300 Cast-in-Place Concrete. Test concrete for slump, temperature and air content at delivery at a frequency of one (1) per 500 linear-feet of ditch paving, a minimum of one (1) each per day. Cast one (1) set of cylinders for compression testing every 500 linear-feet of ditch paving; a minimum of one (1) set per day.

9. Conduct sampling and testing of concrete sidewalk in accordance with Section 03300 Cast-in-Place Concrete. Test concrete for slump, temperature and air content at delivery at a frequency of one (1) per 500 linear-feet of sidewalk, a minimum of one (1) each per day. Cast one (1) set of cylinders for compression testing every 500 linear-feet of sidewalk, a minimum of one (1) set per day.

10. Conduct sampling and testing of area fill in accordance with Section 02200 – Earthwork. Compact area fill to a density of not less than 95 percent (95%) in accordance with AASHTO T 99.

1.06 COORDINATION

A. Completely coordinate the work of this Section with the work of other sections. Verify at the site both the dimensions and work of other trades adjoining items of work in this Section before commencement of items herein specified.

B. Furnish to the pertinent trades all items included under this Section that are to be built into the work of other sections.

1.07 FIELD MEASUREMENTS

A. Take field measurements at the site to verify or supplement indicated dimensions and to ensure proper coordination of all other construction items.

PART 2 PRODUCTS

2.01 BASE COURSE

A. Obtain base material from approved sources with approved crusher equipment. Handle the materials in such a manner that secures a uniform and satisfactory product.

B. Material shall consist of crusher run stone or a mixture of crushed stone and soil mortar uniformly mixed and so proportioned as to meet all the requirements hereinafter specified. The stone shall be hard and durable with a percent of wear of not greater than 45, as determined by the Los Angeles Abrasion Test, and the mixture shall be free from objectionable, injurious, or deleterious matter.

C. Unless otherwise noted, crushed stone base course material shall conform to Class 7 Aggregate Base Course (SB-2) as described on the following table.

GRADING REQUIREMENTS
Class 7 Aggregate Base Course

Sieve Size	Percent Passing
1 1/2-inch	100%
3/4-inch	50% - 90%
#4	25% - 50%
#40	10% - 30%
#200	3% - 10%

D. The fraction passing the #200 sieve shall not be greater than two-thirds (2/3) the fraction passing the #40 sieve. The fraction passing the #40 sieve shall have a Liquid Limit (L.L.) not greater than 25 and Plasticity Index (P.I.) not greater than six (6).

E. The blading of materials on the roadway in order to obtain a mixture that will comply with the above requirements will not be permitted.

2.02 PRIME AND TACK ASPHALTS

A. In general, for prime coats, use a medium curing cut-back asphalt, an anionic emulsified asphalt, a cationic emulsified asphalt, or an asphalt penetrating prime. In general, for tack coats, use a rapid curing cut-back, a cationic emulsified asphalt, or an anionic emulsified asphalt. Materials shall conform to the following requirements:

1. Rapid Curing Cut-back Asphalt (RC-70, RC-250, RC-800 or RC-300) conforming to AASHTO M 81.

2. Medium Curing Cut-back Asphalt (MC-30, MC-70, MC-250, MC-800, or MC-3000) conforming to AASHTO M 82.

3. Anionic Emulsified Asphalt (SS-1 or SS-1h) conforming to AASHTO M 140.

4. Cationic Emulsified Asphalt (CSS-1 or CSS-1h) conforming to AASHTO M 208.

5. Asphalt Penetrating Prime conforming to the following:

Asphalt Penetrating Prime		
Item	Min.	Max.
Flash Point, Pensky Martens	100° F	--
Viscosity, Saybolt Furol at 122° F, seconds	40	120
Distillation AASHTO T 78		
Over at 437° F vol. percent total solvent	15	45
Over at 500° F vol. percent total solvent	55	80
Over at 600° F vol. percent total solvent	85	--
Residue from distillation to 680° F vol. percent	50	--
Test of residue from distillation:		
Softening point (R&B)	115° F	165° F
Penetration at 77° F, mm/10	10	90

2.03 BITUMINOUS SURFACE COURSES

A. The asphalt wearing surface shall consist of a mixture of mineral aggregate and asphalt cement in the following proportions by weight:

GRADING REQUIREMENTS Mineral Aggregate and Asphalt Cement Percent Passing		
Sieve Size	Type 2 Asphalt	Type 3 Asphalt
1-inch	--	--
3/4-inch	100%	--
1/2-inch	85% - 100%	100%
#4	47% - 80%	54% - 80%
#8	28% - 63%	32% - 64%
#16	19% - 50%	22% - 51%
#30	13% - 40%	14% - 43%
#50	8% - 29%	8% - 32%
#100	5% - 20%	5% - 21%
Bitumen	4.5% - 7.5%	4.5% - 7.5%

B. At least one-half (1/2) of the fraction passing the #200 sieve shall comply with the requirements for mineral filler, and in no case shall the mineral aggregate contain less than five percent (5%) mineral filler.

C. The general composition limits set forth in the previous table, are master ranges of tolerance to govern mixtures made from any raw material meeting specification requirements and are maximum and minimum for all cases. The Engineer will specify or approve a job mixture for each project coming within the above limits, which in his judgement, will be suitable and the maximum permissible variations from the mixture shall be as follows:

MAXIMUM PERMISSIBLE VARIATIONS Mineral Aggregate and Asphalt Cement	
Material	Percent Variation
Total retained on 3/4-inch sieve	+/- 7%
Total retained on 1/2-inch sieve	+/- 7%
Total retained on #4 sieve	+/- 7%
Total retained on #10 sieve	+/- 5%
Total passing #40 sieve	+/- 4%
Total passing #80 sieve	+/- 4%
Total passing #200 sieve	+/- 2%
Bitumen	+/-0.4%
Mixture temperature on delivery	+/-15 deg. F

D. Unless otherwise noted, asphalt surface course shall be Type 3.

2.04 CONCRETE

A. Concrete: A five and one-half (5 1/2) bag mix with a 28-day compressive strength of at least 3,500 psi.

B. Use an air-entraining agent with all mixtures when the concrete will be exposed, for freeze/thaw damage resistance.

2.05 SLURRY BACKFILL

A. See Section 02316, Structural Excavation, Trenching, and Backfilling for specifications on Slurry Backfill.

2.06 CONCRETE DRAINAGE PIPE

A. Reinforced concrete drainage pipe: Class III pipe conforming to ASTM C76. Joint material shall conform to AASHTO T 198, Type B.

PART 3 EXECUTION

3.01 LINE AND GRADE

A. The Engineer shall provide survey control points, as indicated on the construction plans, for use by the Contractor. The Contractor shall be responsible for setting his own line and grade stakes, including but not limited to street and drainage baselines and other alignments, profile grades and elevations, and temporary benchmarks. All care shall be taken by the Contractor to preserve the survey control points. In the event of willful or careless destruction of these points, the Contractor shall be liable for the cost of re-establishing said points.

3.02 PAVEMENT SUBGRADE

A. Prepare and shape the subgrade to the line and grade necessary to obtain the finished elevations as shown on the plans. Compact the subgrade to a density of not less than 100 percent (100%) at ± two percent (2%) of optimum moisture as determined by field density tests based on AASHTO T 99. Proof roll and inspect the subgrade prior to placing the base course.

3.03 UNDERCUT, EXCAVATION AND BACKFILL (SELECT MATERIAL)

A. When encountering soft areas or areas in which the proper compaction cannot be obtained, undercut those areas and remove the unsuitable material to the depth necessary to obtain the proper density. Place select material in the undercut area in lifts not to exceed 8-inches and compact each lift to the specified density at or near the optimum moisture content.

3.04 BASE COURSE

A. Deliver the material to the job site and deposit it in uniform loads along the proposed street. Deposit and compact base course materials in layers not to exceed 3 inches

B. After the materials have been deposited by truck, blade the materials, spreading uniformly over the entire surface of the street. Continue this method until the base thickness has been obtained.

Water the material, when necessary, during the spreading procedure to obtain the appropriate moisture content. Compact the material until the density is not less than 95 percent (95%) as determined by field density tests.

C. Proof roll the finished base course with a loaded dump truck and inspect for rutting or soft areas. Remove and replace unsatisfactory areas of the base course and proof roll again prior to the installation of the asphalt surface.

3.05 PRIME AND TACK COAT

A. Surfaces to receive prime or tack coat shall be dry and shall be approved by the Engineer.

B. Apply primer and tack coats in accordance with the manufacturer's instructions. Apply primer to contact surfaces of curb and gutters.

C. Apply prime coats on prepared base or subbase courses and tack coats on asphalt or concrete surfaces at the following rates:

1. Prime Coat: 0.20 – 0.30 Gallon/Square Yard
2. Tack Coat: 0.05 – 0.10 Gallon/Square Yard

3.06 BITUMINOUS SURFACE COURSES

A. Install bituminous (asphalt) surface courses in accordance with the ARDOT standards.

B. The methods employed in performing the Work and all equipment, tools, and plant machinery used in executing any part of the Work shall be subject to the approval of the Engineer. When they are found unsatisfactory, change and improve equipment and procedures as required by the Engineer and these Specifications. Maintain all equipment, tools, and plant machinery in a satisfactory working condition.

C. Prior to arrival of the asphalt mixture at the job site, clean the prepared surface of all loose and foreign materials, and prime or tack the surface as specified. Do not place asphalt on a surface that shows evidence of moisture. Paint surfaces of curbing, gutters, manholes, and other structures that will be exposed to the asphalt with a thin coating of rapid curing cut-back asphalt or emulsified asphalt.

D. When any previously laid asphalt course becomes coated with dirt or foreign material to such extent as to prevent proper adhesion of the later course, the earlier course shall be cleaned and given a tack coat, if necessary, prior to placing the succeeding course.

E. At the time of delivery to the job site, the temperature of asphalt mixture shall not be lower than 250° Fahrenheit.

F. Do not place asphalt when the atmospheric temperature is below 40° Fahrenheit or during unsuitable weather.

G. Upon arrival at the job site, dump the asphalt mixture immediately into a mechanical spreading and finishing (lay down) machine, and spread and strike off in a uniform layer of sufficient thickness. Hand spreading will be permitted only on small turnouts and other small areas inaccessible to the spreader. Spread and finish asphalt on normal two-lane roads in one-half (1/2) widths. Unless two (2) machines are employed, the spreader shall alternate between the two (2) half-widths with such frequency that the second half width shall be laid the next day after the first half is laid.

H. When more than one (1) asphalt course is called for on the Drawings, the succeeding course shall follow not later than 72 hours unless the preceding course is given a tack coat. If for any reason proper bond is not obtained between the two courses, a tack coat shall be used even though the lapsed time has been less than 72 hours.

I. Rolling shall start longitudinally at the side and proceed toward the center of the roadway, overlapping on successive trips by at least one-half (1/2) of the width of the rear roller wheel. Roll the mixture continuously until all roller marks are eliminated and no further compaction is possible. The motion of the roller shall at all times be slow enough and smooth enough to avoid displacement or cracking of the mixture. Correct displacement resulting from reversing the direction of the roller, or from any other cause, by the use of rakes and fresh material. To prevent adhesion of asphalt to the roller, keep the wheels properly moistened with water and/or oil. Excess of such moisture will not be permitted.

J. Asphalt rollers shall be of a type approved by the Engineer. As a guide, three (3) axle tandems and three (3) wheeled rollers shall be of such weight that the compression load on the drive wheels is not less than 325 pounds per inch of tire width. Tandem rollers shall weigh not less than eight (8) tons.

K. When the mixture is laid in a half width and a satisfactory joint is not secured, or if breakdowns cause a delay in placing the second half, cut back the existing joint and paint it with a thin coat of hot asphalt cement or asphalt thinned with naphtha. See the following requirements for preparing transverse joints at the end of the day's work.

L. The roller shall pass over the unprotected end of the freshly laid mixture only when the laying of the course is discontinued for such length of time as to permit the mixture to become chilled. In all cases, make provisions for proper bond with the new mixture by cutting or trimming back the joint to expose an unsealed or granular surface for the full specified depth of the course.

M. At the end of each day's work, form joints by laying and rolling against boards of the thickness of the compacted mixture, placed across the entire width of the base course, or by other methods as may be approved by the Engineer. When the laying of the course is resumed, paint the exposed edge of the joint with a thin coat of hot asphalt cement or asphalt cement thinned with naphtha. Rake the fresh mixture against the joint, thoroughly tamp with hot tampers, and roll the finished surface. Hot smoothing irons may be used for sealing joints but in such cases, extreme care shall be exercised to avoid burning the surface.

N. Before the completion of the rolling, test the surface for thickness and contour and correct as necessary while still hot by adding or removing material, restoring and re-rolling until the finished surface complies with the test requirements.

O. The finished surface, when checked with a 10-foot straight edge placed parallel to the centerline, shall show no variation more than 1/4-inch for base or intermediate courses, and not more than 1/8-inch for surface courses.

P. Remove and replace defective portions of the completed base or surface course with suitable materials at no additional expense to the Owner.

3.07 CURB AND GUTTER

A. Construct curb and gutter on a prepared sub-base, in accordance with these Specifications and the details as shown on the Drawings.

B. The sub-grade shall be free of organic materials, soft clay, spongy material or any other objectionable material. Prepare the sub-grade in accordance with the section on base course and to a proper shape to conform to the accepted cross sections and grade.

C. Provide concrete forms of wood or metal, straight, free from warps or kinks and of sufficient strength. Stake forms securely to resist the pressure of the concrete without spring. Prior to placing concrete, bring the forms to the true approved line and grade and keep them aligned until the concrete has set. Where a face form for a curb is used, it shall be so designed as to permit it to be securely fastened to the other forms.

D. Moisten the sub-grade prior to placing concrete. Place the concrete, mixed to the proper consistency, in the forms and tamp thoroughly so that all honeycombing will be eliminated, and sufficient mortar will be brought to the surface. Bring the concrete to a smooth, even finish by means of wood float or trowel.

E. Spade all faces adjacent to the forms so that after forms are removed, the surfaces will be smooth, even and free of honeycomb. Tool all edges round.

F. Place 3/4-inch expansion joints at intervals not to exceed 60 feet or as shown on the Drawings. Score the concrete to a depth equal to one-third (1/3) the total depth of the concrete at intervals of not greater than 10 feet or less than 5 feet unless otherwise shown on the Drawings.

G. Protect concrete from curing too rapidly. When curb and gutter or swale sections are completed, spray them with a concrete curing compound or keep them moist by using wet burlap for a period of three (3) days. Keep the surface thoroughly damp between the completion of the finishing operations and the application of the curing compound.

H. Backfill the curb and gutter immediately after removing the forms. Backfill with selected material, placed and compacted in layers not to exceed 4 inches in depth.

3.08 CONCRETE DITCH PAVING

A. Excavate the ditch subgrade to the required depth. Remove all soft or yielding material and replace it with suitable material, thoroughly compacted.

B. Provide concrete forms that are clean, oiled, free from warps, sufficiently strong to maintain alignment, and securely staked and braced. Spade or vibrate the concrete to prevent honeycomb and finish with a wood float. Round all edges with a 1/4-inch edger.

C. Tool transverse contraction joints with a 1/4-inch jointer or saw cut joints at intervals not greater than 5 feet measured longitudinally along the flow line.

D. Install an expansion joint at each structure with a space of not less than 1-inch left between the paving and the structure. Fill the space with a poured bituminous joint filler. Maximum spacing of expansion joints shall be 50 feet and at all structures.

3.09 CONCRETE WALKS

A. Excavate the sidewalk subgrade to the required depth. Remove all soft and yielding material and replace it with suitable material, thoroughly compacted with approved mechanical equipment.

B. Provide concrete forms that are clean, oiled, sufficiently strong to resist springing, and securely staked and braced.

C. Place concrete on wetted subgrade, compacted and finished with a wood float. Lightly broom the sidewalk concrete and round all edges with a 1/4-inch edger

D. Tool transverse contraction joints with a 1/4-inch jointer or saw cut joints at intervals not greater than 4 feet measured along the length of the sidewalk.

E. Install a 1/2-inch expansion joint at intervals at 50 feet and at the intersection with all fixed structures. Install bituminous preformed expansion joint material as the concrete is placed and seal the joint.

F. Grade and construct the concrete walk so that it is flush with the adjacent finished grade and such that drainage will pass unimpeded across the sidewalk.

3.10 AREA FILL

A. Place excess material obtained through the excavation of the required street grading in the on-site area shown on the grading plan, in a disposal area off-site, or as directed by the Engineer. Clear and grub the area prior to applying fill. The fill shall be applied in lifts not to exceed 8-inch and compacted to a density of 95 percent (95%) density.

3.11 TOPSOIL

A. Prior to commencement of work, strip and stockpile the topsoil from all areas to be disturbed by street or drainage construction. Spread, disk, and lightly roll topsoil over all graded areas after the installation of structures.

END OF SECTION

SECTION 02921

SODDING

PART 1 GENERAL

1.01 SCOPE OF WORK

A. Furnish all labor, materials, equipment and incidentals as required to place and grade topsoil; and to apply lime, fertilizer, sod, and water on all disturbed areas.

1.02 RELATED SECTIONS

A. Section 01111 – Site Conditions

B. Section 02100 – Site Preparation

C. Section 02370 – Erosion and Sedimentation Control

1.03 SUBMITTALS

A. See Section 01300, Submittals for submittal procedures.

B. Product Data: Submit samples of all materials for inspection and acceptance upon request by the Engineer. Include sod grower's name, location, and grass type for review and approval prior to delivery of sod to the site.

C. Submit complete written instructions for maintenance of the sodded areas to the Owner at the time of acceptance.

1.04 COORDINATION

A. Coordinate the work of this Section with the work of other sections. Verify at the site both the dimensions and work of other trades adjoining items of work in this Section before commencement of items herein specified.

1.05 FIELD MEASUREMENTS

A. Take field measurements at the site to verify or supplement indicated dimensions and to ensure proper coordination of all other construction items.

PART 2 PRODUCTS

2.01 MATERIALS

A. Topsoil shall be fertile, friable, loamy surface soil without admixture and free of stones, stumps, roots, sticks, debris, and clay balls greater than 1 inch in diameter. Topsoil shall be stripped from naturally well drained sites and be free of noxious weeds and other materials deleterious to plant growth. It shall have a pH range of 5.5 to 7.5 and have a minimum organic content of 6 percent (6%).

B. Lime shall be agricultural grade ground limestone or approved equivalent, containing not less than 85% calcium and magnesium carbonates.

C. Fertilizer shall be a commercial grade, 10-20-10 (N-P_2O_5-K_2O), uniform in composition, suitable for application with mechanical equipment, and conforming to state fertilizer laws. Deliver fertilizer to the site in original, unopened containers, bearing the name, trademark, and manufacturer's guaranteed analysis. Store fertilizer so that it remains dry and free flowing.

D. Sod for Lawn Areas:

1. Unless otherwise noted on the Drawings, sod shall consist of Bermuda grass, grown by an established sod grower, and approved by the Owner.

2. Sod shall be vigorous, well-rooted, healthy turf; free from insect pests, disease, weeds, other grasses, stones, bare spots, burned spots, and any other harmful or deleterious matter. Sod shall be machine stripped at a uniform soil thickness of approximately 1 inch and not less than 3/4 inch. The thickness measurement shall not include top growth and thatch.

3. Sod shall not be harvested or transplanted when moisture content (excessively wet or dry) may adversely affect its survival.

4. Harvest, deliver and transplant sod within a 36-hour period unless a suitable preservation method is approved by the Engineer prior to delivery. Sod not transplanted with this period shall be subject to inspection and possible rejection by the Engineer prior to its installation.

PART 3 EXECUTION

3.01 GENERAL

A. Sodding shall consist of furnishing and applying topsoil, fertilizer, lime, sod, and water on all areas that have been disturbed by the construction work. These areas shall include lawns, pastures, ditches, ditch banks, embankment areas, compacted fill areas, cut or fill slopes and any area disturbed by construction.

B. Perform soil conditioning and sodding only during those periods within the season that are normal for such work as determined by the weather and locally accepted practice, as approved by the Engineer.

C. Submit schedules for sodding to the Engineer for approval prior to the work.

3.02 SODDING PREPARATION

A. Remove all excess dirt, construction materials, trees, rubbish, debris, roots, stumps and rocks larger than 2 inches and dispose of off-site. Dress areas to be sodded to the lines and grades shown on the plans, and rake to loosen the subgrade immediately prior to the application of topsoil. Subgrade shall be inspected and approved by the Engineer before topsoil is placed.

B. Obtain soil samples, to a depth of 5 inches, from each major soil area, and have lime and fertilizer requirement analyses conducted.

C. Prepare subgrade by tilling prior to topsoil placement to obtain a satisfactory bond between the two (2) layers. Tillage operations shall be across slope but shall not take place on slopes steeper than 2:1 (horizontal to vertical) or where tillage equipment cannot be operated safely. Accomplish tillage by discing or harrowing to a depth of 9 inches parallel to contours. Do not perform tillage when the subgrade is frozen, excessively wet, extremely dry, or under other conditions that will not permit acceptable results. Rake the subgrade, or otherwise loosen the surface, immediately prior to application of topsoil.

D. Unless otherwise shown on the Drawings, place topsoil to a minimum depth of 4 inches on all parts of the site not covered with structures, pavement, or existing vegetation. Place topsoil over approved areas to a depth sufficiently greater than required so that after natural settlement and light rolling, the complete work will conform to the lines, grades and elevations shown on the Drawings or as directed by the Engineer. Do not handle, move or spread topsoil when it is frozen or muddy.

E. After spreading topsoil, prepare it by scarifying or harrowing and hand raking. Remove all stiff clods, lumps, roots, litter, rocks and other foreign material from the prepared area and dispose of it in an approved manner.

3.03 APPICATION OF TOPSOIL AMENDMENTS

A. Lime

1. Apply lime at the rate determined by the lime requirement test to bring topsoil pH to a range of 5.5 to 7.5.

2. Uniformly spread lime and then thoroughly pulverize the surface by means of disk harrows, hand raking, or other approved methods, thoroughly mixing lime and soil to a depth of 4 inches. Remove rocks, large clods, lumps, brush, roots, litter, and other objectionable foreign matter turned up during mixing, and apply water to maintain the desired moisture content in the soil.

B. Fertilizing

1. Apply fertilizer at a rate determined by the soil test and as recommended by the sod supplier.

2. Apply fertilizer uniformly and incorporate it into the soil to a depth of at least 2 inches. Fertilizer may be applied hydraulically; however, the Contractor is responsible for cleaning all structures and paved areas of unwanted deposits.

3. Roll the prepared surface with a hand roller weighing not more than 100 lb/ft. of roller width. Refill with additional topsoil, regrade all depressions caused by settlement during rolling, and reroll until smooth.

4. If sod cannot be installed immediately, install temporary seeding and mulching in areas that will remain disturbed for more than two (2) weeks in accordance with Section 02370, Erosion and Sedimentation Control. Temporary seeding and mulching shall be considered incidental to the Work.

3.04 INSTALLATION OF SOD

A. Perform soil conditioning and sodding only during those periods within the season that are normal for such work as determined by the weather, locally accepted practices, and as approved by the Engineer. No sod shall be placed prior to the Engineer's inspection and approval of the prepared topsoil.

B. Perform sodding between the period of June 1 and September 1 and only if irrigation is provided, unless otherwise directed by the Engineer. For any sod applied after September 1, the Contractor shall provide an 18-month warranty on the sodding work from the date of installation.

C. Perform sodding within five (5) days following soil preparation.

D. Lightly moisten the soil immediately prior to laying the sod. Lay the first row of sod in a straight line with subsequent rows placed parallel to each other, staggering lateral joints. Exercise care to ensure that sod is not stretched or overlapped and that all joints are butted tightly to prevent voids. At the top of slopes, the sod shall be turned into the embankment slightly and a compacted layer of soil placed over it to conduct surface water over and onto the sod.

E. As sodding is completed in any one section, roll the area by making four (4) passes with a hand roller weighing not more than 100 lb/ft. of width.

F. Sod placed on slopes steeper than 3:1 (horizontal to vertical) shall be secured in place with wooden pegs or other approved devices driven through the sod into firm soil.

G. When noted on the Drawings, the Contractor shall overseed the sodding with annual rye seed applied at a rate of 6 to 10 lb/1,000ft^2.

H. Water sod immediately after transplanting to prevent excessive drying during the progress of the Work. After rolling, water the sod to a sufficient depth so that the underside of the new sod pad and soil immediately beneath are thoroughly wet. The Contractor is responsible for providing water and having an adequate supply available at the site during and after transplanting the sod. Always keep sodded areas moist. In the absence of adequate rainfall, water daily or as often as necessary to maintain soil moisture to a depth of 4 inches.

3.05 EROSION CONTROL

A. Install sodding as soon as construction work is completed to prevent unnecessary erosion of newly restored work areas and silting of drainage ways. If sod cannot be installed with five (5) days of topsoil preparation, install temporary seeding and mulching.

B. When newly graded subgrade areas cannot be topsoiled and sodded because of season or weather conditions, and when they will remain exposed for more than 14 days, protect those areas against erosion and washouts by temporary seeding and mulching. Prior to application of topsoil, thoroughly incorporate any such erosion control material into the subgrade by discing. Apply fertilizer prior to spreading of topsoil.

C. Provide protection of slopes against washouts by an approved method in accordance with Section 02370, Erosion and Sedimentation Control. Regrade and resod all washouts that occur until a good sod is established at no additional cost to the Owner.

3.06 CLEANUP

A. Prior to final acceptance and payment, the Contractor shall remove all machinery, equipment, surplus materials, rubbish, etc., from the project. Clean pavements, driveways, sidewalks, and storm drainage facilities, and remove surplus soil and debris.

3.07 MAINTENANCE AND PROVISIONAL ACCEPTANCE

A. Keep all sodded areas watered and maintained in an approved condition until Substantial Completion or provisional acceptance by the Owner. The maintenance period shall occur during the growing season between April 1 and October 1. Maintenance shall include mowing lawn areas within the Work site until acceptance by the Owner.

B. The Engineer will inspect the Work for provisional acceptance, upon written request from the Contractor, received at least ten (10) days before the anticipated inspection date. The inspection by the Engineer will determine whether maintenance shall continue in any area for manner.

C. After inspection by the Engineer, and prior to provisional acceptance, the Contractor shall provide soil testing from an acceptable laboratory to determine if additional fertilization should occur. If necessary, apply additional fertilizer at rate not to exceed 30 lb/1,000 ft^3 of 10-20-10 as directed by the Engineer.

D. After all necessary corrective work and clean up has been completed, and maintenance instructions have been received by the Owner, the Engineer will make a recommendation to the Owner on provisional acceptance of the sodded areas. Maintenance of sodded areas shall cease on receipt of provisional acceptance.

E. The Owner reserves the right to require maintenance on lawns until the date of Substantial Completion. Acceptance of sodded areas, provisional or otherwise, does not relieve the Contractor of responsibility of establishing sod in restored areas under the provisions of the project warranty on materials and workmanship.

END OF SECTION

THIS PAGE INTENTIONALLY LEFT BLANK

SECTION 03100

CONCRETE FORMWORK

PART 1 GENERAL

1.01 SCOPE OF WORK

A. Furnish all labor, materials, equipment, and incidentals required to design, install, adjust, and remove formwork for cast-in-place concrete as shown on the Drawings and as specified herein.

B. Secure to forms as required or set for embedment as required, all miscellaneous metal items, sleeves, reglets, anchor bolts, inserts, and other items furnished under other Sections and required to be cast into concrete. Items to be embedded in concrete shall be free from oil or any matter that decrease the bond between the concrete and these items.

1.02 RELATED SECTIONS

A. Section 03200 – Concrete Reinforcement

B. Section 03250 – Concrete Joints and Joint Accessories

C. Section 03300 – Cast-in-Place Concrete

D. Section 03600 – Grout

E. Section 03740 – Modification or Repair of Existing Concrete

1.03 REFERENCE STANDARDS

A. American Concrete Institute (ACI), latest edition:

1. ACI 301 Specifications for Structural Concrete

2. ACI 318 Building Code Requirements for Structural Concrete and Commentary

3. ACI 347 Guide to Formwork for Concrete

4. ACI 350 Code Requirements for Environmental Engineering Concrete Structures and Commentary

B. American Plywood Association (APA), latest edition:

1. Material grades and designations as specified

1.04 SYSTEM DESCRIPTION

A. General: Architectural Concrete is wall, slab, beam or column concrete which will have surfaces exposed to view in the finished work. It includes similar exposed surfaces in water containment structures from the top of walls to 2 feet below the normal water surface in open tanks and basins.

B. Structural design responsibility: The Contractor shall be responsible for the design and erection of all formwork in accordance with the requirements of ACI 301 and ACI 318. The formwork shall be designed for the loads, lateral pressures, and allowable stresses in conformance with ACI 347, Guide to Formwork for Concrete and shall comply with all applicable regulations and codes. The design shall consider any special requirements due to the use of plasticized and/or retarded set concrete.

1.05 SUBMITTALS

A. See Section 01300, Submittals for submittal procedures. Submit shop drawings and product data, showing materials of construction and details of installation for:

1. Form release agent

2. Form ties

3. Location and sequence of concrete placements. Indicate locations of form joints, panel sizes, and patterns. Show location of form ties on architectural surfaces

4. Review of pour sequence, form system, and panel layout shall be for appearance and strength of the completed structure only. Review by the Engineer of forming plans or procedures shall not relieve the Contractor of responsibility for the strength, safety, or correctness of methods used, the adequacy of equipment, or from carrying out the Work in full compliance with the requirements of the Drawings and Specifications

B. Samples

1. The Contractor may be required by the Engineer to demonstrate that the form release agent will not adversely affect concrete surfaces to be painted, coated, or otherwise finished and will not affect the forming materials. The demonstration will be on a designated area of the concrete substructure exterior surface as directed by the Engineer.

PART 2 PRODUCTS

2.01 GENERAL

A. The usage of a manufacturer's name and model or catalog number is for the purpose of establishing the standard of quality and general configurations desired.

2.02 MATERIALS

A. Forms for cast-in-place concrete shall be made of wood, metal, or other approved material. Wood forms for the Project shall be new and unused. Construct wood forms of sound lumber or plywood of suitable dimensions and free from knotholes and loose knots. Where used for exposed surfaces, dress and match boards. Sand plywood smooth and fit adjacent panels with tight joints. Metal forms, using smooth metal plates free of surface irregularities, may be used when approved by the Engineer and shall be of an appropriate type for the class of work involved. All forms shall be designed and constructed to provide a flat, uniform concrete surface requiring minimal finishing or repairs.

B. Wall Forms

1. Forms for all exposed exterior and interior concrete walls shall be new and unused "Plyform" exterior grade plywood panels manufactured in compliance with the APA and bearing the trademark of that group or approved equal acceptable to the Engineer. Provide B grade or better veneer on all faces to be placed against concrete during forming. The class of material and grades or interior plies shall be of sufficient strength and stiffness to provide a flat, uniform concrete surface requiring minimal finishing and grinding.

2. Construct forms tight enough to prevent loss of concrete mortar.

C. Column Forms

1. Rectangular columns shall be formed as specified for wall forms. All corners shall have a 3/4-inch chamfer unless otherwise noted on the Drawings.

2. Circular columns shall be formed with steel, fiberglass reinforced plastic, or seamless cardboard column forms. The forms shall be continuous for the height of the column between construction joints indicated on the Drawings unless otherwise approved by the Engineer.

D. Rustications shall be at the location and shall conform to the details shown on the Drawings. Moldings for chamfers and rustications shall be milled and planed smooth. Rustications and corner strips shall be of a non-absorbent material, compatible with the form surface and fully sealed on all sides to prohibit the loss of paste or water between the two surfaces.

E. Form Release Agent

1. Coat all forming surfaces in contact with concrete using an effective, non-standing, non-residual, water based, bond-breaking form coating unless otherwise noted.

2. Do not allow form release agent to puddle in the forms.

3. Do not allow form release agent to contact reinforcing steel, embedded items, waterstop, or hardened concrete against which fresh concrete is to be placed.

F. Concrete surfaces which are to be painted shall be formed with hard plastic finished plywood or a similar material which does not require a form release agent unless the Contractor can substantiate to the satisfaction of the Engineer that the form release agent will not remain on the formed surface after it is stripped.

G. Forms for Architectural Concrete or Concrete Receiving Architectural Finish

1. Forms for architectural concrete shall be constructed of materials and in a manner that will result in rigid forms with sufficient strength to withstand, without noticeable deflection, movement, or leakage, the high hydraulic pressures resulting from rapid filling of the forms and heavy high frequency vibration of the concrete. Deflection in formwork shall be limited to 1/360 of each component span. Form joints shall be laid out in a uniform pattern or as indicated on the Drawings

H. Form Ties

1. Form ties encased in concrete other than those specified in the following paragraphs shall be designed so that, after removal of the projecting part, no metal shall remain within 1½ inches of the face of the concrete. The part of the tie to be removed shall be at least 1/2-inch diameter and 1½ inches long. Form ties in concrete exposed to view shall be the cone-washer type.

2. Form ties for exposed exterior and interior walls shall be as specified in the preceding paragraph except that the cones shall be of approved wood or plastic.

3. Flat bar ties for panel forms shall have plastic or rubber inserts having a minimum depth of 1½ inches and sufficient dimensions to permit proper patching of the tie hole.

4. Ties for liquid containment structures shall have an integral waterstop that is tightly welded to the tie, or a tight-fitting neoprene waterstop at mid-point, so that the waterstop cannot be moved from the midpoint area of the form tie.

5. Common wire shall not be used for form ties.

PART 3 EXECUTION

3.01 GENERAL

A. Forms shall be used for all cast-in-place concrete including sides of footings. Forms shall be constructed and placed so that the resulting concrete will be of the shape, lines, dimensions, and appearance indicated on the Drawings. Forms shall be sufficiently tight to prevent loss of mortar.

B. Forms for walls shall have removable panels at the bottom for cleaning, inspection and joint surface preparation. Forms for walls of considerable height shall have closable intermediate inspection ports. Tremies and hoppers for placing concrete shall be used to allow concrete inspection, prevent segregation and prevent the accumulation of hardened concrete on the forms above the fresh concrete.

C. Molding, bevels, or other types of chamfer strips shall be placed to produce blockouts, rustications, or chamfers as shown on the Drawings or as specified. Chamfer strips shall be provided at horizontal and vertical projecting corners to produce a 3/4-inch chamfer. Rectangular or trapezoidal moldings shall be placed in locations requiring sealant where specified or shown on the Drawings. Sizes of moldings shall conform to the sealant manufacturer's recommendations.

D. Forms shall be sufficiently rigid to withstand construction loads and vibration and to prevent displacement or sagging between supports. Construct forms so that the concrete will not be damaged by their removal. The Contractor shall be entirely responsible for the adequacy of the forming system.

E. Before form material is re-used, all surfaces to be in contact with concrete shall be thoroughly cleaned, all damaged places repaired, all projecting nails withdrawn, and all protrusions smoothed. Reuse of wooden forms for other than rough finish will be permitted only if a "like new" condition of the form is maintained.

3.02 FORM TOLERANCES

A. Forms shall be surfaced, designed and constructed in accordance with the recommendations of ACI 347 and shall meet the following additional requirements for the specified finishes.

B. Formed Surface Exposed to View: Edges of all form panels in contact with concrete shall be flush within 1/8 inch and forms for plane surfaces shall be such that the concrete will be plane within 1/8 inch in 5 feet. Forms shall be tight to prevent the passage of mortar, water and grout. The maximum deviation of the finish wall surface at any point shall not exceed 1/4 inch from the intended surface as shown on the Drawings. Form panels shall be arranged symmetrically and in an orderly manner to minimize the number of seams.

C. Formed surfaces not exposed to view or buried shall meet requirements of Class "C" Surface in ACI 347. Limit abrupt or gradual irregularities in formed surfaces not exposed to view to ½ inch within a 5-foot length as measured with a straightedge.

D. Formed rough surfaces including mass concrete pipe encasement, electrical duct encasement, and other similar installations shall have no minimum requirements for surface smoothness and surface deflections. The overall dimensions of the concrete shall be plus or minus 1 inch.

E. Formed Concrete Surfaces to Receive Paint: Surface deflections shall be limited to 1/32 inch at any point and the variation in wall deflection shall not exceed 1/16-inch per 4 feet. The maximum deviation of the finish wall surface at any point shall not exceed 1/4 inch from the intended surface as shown on the Drawings.

F. Architectural Concrete: All smooth faces to be exposed to view shall have surface deflections limited to 1/32 inch at any point and the variation in wall deflection shall not exceed 1/16 inch per 4 feet. The maximum deviation of the finished wall surface at any point shall not exceed 1/4 inch from the intended surface as shown on the Drawings. All textured faces, form lines, or rustications to be exposed to view shall be straight, plumb, and true with a variation of no more than 1/4 inch in 10 feet measured in any direction.

3.03 FORM PREPARATION

A. Wood forms in contact with the concrete shall be coated with an effective release agent prior to form installation.

B. Steel forms shall be thoroughly cleaned, and mill scale and other ferrous deposits shall be sandblasted or otherwise removed from the contact surface for all forms, except those utilized for surfaces receiving a rough finish. All forms shall have the contact surfaces coated with a release agent.

3.04 REMOVAL OF FORMS

A. The Contractor shall be responsible for all damage resulting from removal of forms. Forms and shoring for structural slabs or beams shall remain in place in accordance with ACI 301 and ACI 347. Form removal shall conform to the requirements specified in Section 03300, Cast-in-Place Concrete.

3.05 INSPECTION

A. The Engineer shall be notified when the forms are complete and ready for inspection at least six hours prior to the proposed concrete placement.

B. Failure of the forms to comply with the requirements specified herein, or to produce concrete complying with requirements of these Specifications, shall be grounds for rejection of that portion of the concrete work. Rejected work shall be repaired or replaced as directed by the Engineer at no additional cost to the Owner. Such repair or replacement shall be subject to the requirements of these Specifications and approval of the Engineer.

END OF SECTION

SECTION 03200

CONCRETE REINFORCEMENT

PART 1 GENERAL

1.01 SCOPE OF WORK

A. Furnish all labor, materials, equipment, and incidentals required and install all concrete reinforcement complete as shown on the Drawings and as specified herein.

B. Furnish all the deformed steel reinforcement required to be entirely built into the concrete masonry unit construction.

1.02 RELATED SECTIONS

A. Section 03100 – Concrete Formwork

B. Section 03250 – Concrete Joint and Joint Accessories

C. Section 03300 – Cast-in-Place Concrete

D. Section 03600 – Grout

E. Section 03740 – Modification or Repair of Existing Concrete

F. Section 04200 – Masonry

1.03 REFERENCE STANDARDS

A. ASTM International (ASTM), latest edition:

1. ASTM A36 Standard Specification for Carbon Structural Steel

2. ASTM A615 Standard Specification for Deformed and Plain Carbon-Steel Bars for Concrete Reinforcement

3. ASTM A706 Standard Specification for Deformed and Plain Low-Alloy Steel Bars for Concrete Reinforcement

4. ASTM A722 Standard Specification for High-Strength Steel Bars for Prestressed Concrete

5. ASTM A934 Standard Specification for Epoxy-Coated Prefabricated Steel Reinforcing Bars

6. ASTM A1064 Standard Specification for Carbon-Steel Wire and Welded Wire Reinforcement, Plain and Deformed, for Concrete

7. ASTM C1116 Standard Specification for Fiber-Reinforced Concrete

8. ASTM F3125 Standard Specification for High Strength Structural Bolts and Assemblies, Steel and Alloy Steel, Heat Treated, 120 ksi (830 MPa) and 150 ksi (1040 MPa) Minimum Tensile Strength, Inch and Metric Dimensions

B. American Concrete Institute (ACI), latest edition:

1. ACI 301 Specifications for Structural Concrete and Commentary

2. ACI 318 Building Code Requirements for Structural Concrete and Commentary

3. ACI 350 Code Requirements for Environmental Engineering Concrete Structures and Commentary

4. SP-66 ACI Detailing Manual

C. Concrete Reinforcing Steel Institute (CRSI), latest edition:

1. Manual of Standard Practice

D. American Welding Society (AWS), latest edition:

1. AWS D1.4 Structural Welding Code–Reinforcing Steel

1.04 SUBMITTALS

A. See Section 01300, Submittals for submittal procedures. Submit shop drawings and product data showing materials of construction and details of installation for:

1. Reinforcing steel: Placement drawings shall conform to the recommendations of ACI 301 and SP-66 ACI Detailing Manual. All reinforcement in a concrete placement shall be included on a single placement drawing or cross-referenced to the main pertinent placement drawing. This drawing shall include the additional reinforcement (around openings, at corners, etc.) shown on the standard detail sheets. Bars to have special coatings or to be of special steel or special yield strength are to be clearly identified.

2. Bar bending details: The bars shall be referenced to the same identification marks shown on the placement drawings. Bars to have special coatings or to be of special steel or special yield strength are to be clearly identified.

3. Schedule of all placements to contain synthetic reinforcing fibers. The amount of fibers per cubic yard to be used for each of the placements shall be noted on the schedule. The name of the manufacturer of the fibers and the product data shall be included with the submittal.

4. Reinforcing bar supports and accessories.

B. Submit samples of each of the following items.

1. One (1) sample of each type of mechanical reinforcing steel connectors, if used.

C. Furnish test data to indicate compliance with the following:

1. Certified copy of mill test on each steel proposed for use showing the physical properties of the steel and the chemical analysis

2. Certified copy of test reports for each foreign manufactured steel proposed for use in the fabrication of reinforcement. The tests shall be specifically made for this project at the expense of the Contractor by a domestic independent testing laboratory certified to perform the tests. The testing shall be for conformity to the applicable ASTM standard

3. Welder's certification. The certification shall be in accordance with AWS D1.4 when welding of reinforcement is required

1.05 QUALITY ASSURANCE

A. Provide services of a manufacturer's representative having at least two (2) years' experience in the use of the reinforcing fibers for a preconstruction meeting and assistance during the first placement of the material.

1.06 DELIVERY, STORAGE, AND HANDLING

A. Reinforcing steel shall be substantially free from mill scale, rust, dirt, grease, or other foreign matter.

B. Reinforcing steel shall be shipped and stored with bars of the same size and shape fastened in bundles with durable tags, marked in a legible manner with waterproof markings showing the same "mark" designations as those shown on the submitted Placing Drawings.

C. Reinforcing steel shall be stored off the ground, protected from moisture and kept free from dirt, oil, or other injurious contaminants.

PART 2 PRODUCTS

2.01 MATERIALS

A. Materials shall be new and shall comply with the following material specifications

B. Deformed Concrete Reinforcing Bars: ASTM A615, Grade 60 deformed bars

C. Concrete Reinforcing Bars required on the Drawings to be field bent or welded: ASTM A706

D. Spiral Reinforcement

1. ASTM A615, Grade 60 for hot-rolled plain or deformed bars

2. ASTM A1064 for cold-drawn wire

E. Welded Steel Wire Fabric: ASTM A1064

F. The following alternate materials are allowed:

1. ASTM A615 Grade 60 may be used for ASTM A706 provided the following requirements are satisfied:

a. The actual yield strength of the reinforcing steel based on mill test shall not exceed the specified yield strength by more than 18,000 psi. Retests shall not exceed this value by more than an additional 3,000 psi.

b. The ratio of the actual ultimate tensile strength to the actual tensile yield strength of the reinforcement shall not be less than 1.25.

c. The carbon equivalency (CE) of ASTM A615 bars shall be 0.55 or less.

G. High strength uplift anchor rods used in auger cast piles shall be the diameter and the full pile length as shown on the Drawings. The rods shall be hot rolled and proof stressed, high strength alloy steel conforming to ASTM A722, Type II with surface deformations having a single minimum ultimate tensile strength level of 15,000 psi. The bars shall be "Dywidag Threadbar System" manufactured by Dyckerhoff and Widman, Inc., San Diego, California, or approved equal acceptable to Engineer. Each uplift anchor shall have an anchor plate (ASTM A36), bevel washer (ASTM A325) and hex unit (ASTM A325) as shown on the Drawings and recommended by the manufacturer to carry the specified uplift loading.

H. Reinforcing Steel Accessories

1. Plastic Protected Bar Supports: CRSI Bar Support Specifications Class 1-Maximum Protection.

2. Stainless Steel Protected Bar Supports: CRSI Bar Support Specifications, Class 2-Moderate Protection

3. Precast Concrete Block Bar Supports: CRSI Bar Support Specifications, Precast Blocks. Blocks shall have equal or greater strength than the surrounding concrete.

I. Tie Wire

1. Tie Wired for Reinforcement shall be 16-gauge or heavier, black annealed wire.

J. Mechanical reinforcing steel butt splices shall be positive connecting threaded type couplers such as Lenton rebar splices by Erico Products, Inc.; MRC Couplers by Dayton Superior, or approved equal. They shall meet all ACI 318 Building Code requirements. Bar couplers shall be torqued to manufacturer's recommended value.

1. Unless otherwise noted on the Drawings, mechanical tension splices shall be designed to produce a splice strength in tension or compression of not less than 125 percent (125%) of the ASTM specified minimum yield strength of the rebar in pounds based on the gross area of the rebar.

2. Compression type mechanical splices shall provide concentric bearing from one bar to the other bar and shall be capable of developing the ultimate strength of the rebar in compression.

K. Fiber Reinforcement (Fiber mesh): Synthetic reinforcing fiber must meet the requirements of ASTM C1116. Synthetic reinforcing fiber for concrete shall be 100 percent (100%) polypropylene collated, fibrillated fibers as manufactured by Propex Concrete Systems Corp., Chattanooga, Tennessee, or approved equal. Fiber length and quantity for the concrete mix shall be in strict compliance with the manufacturer's recommendations as approved by the Engineer.

L. Epoxy-Coated Reinforcing Steel: shall be provided at locations specified on the Drawings. Epoxy-coated bars shall conform to ASTM A934.

2.02 FABRICATION

A. Fabrication of reinforcement shall be in compliance with the CRSI Manual of Standard Practice.

B. Bars shall be cold bent. Bars shall not be straightened or re-bent.

C. Bars shall be bent around a revolving collar having a diameter of not less than that recommended by the CRSI.

D. Bar ends that are to be butt spliced, placed through limited diameter holes in metal, or threaded, shall have the applicable end(s) saw-cut. Such ends shall terminate in flat surfaces within 1-1/2 degrees (1.5°) of a right angle to the axis of the bar.

E. Spirals (may be substituted for non-spiral ties in circular columns)

1. Provide a minimum of one and one-half (1-1/2) finishing turns at the top and bottom.

2. Splices shall be tension lap splices at least 48 bar diameters, but not less than 12 inches in length. Welded splices shall only be used where specifically approved by the Engineer.

3. Provide spacers as recommended by the CRSI.

PART 3 EXECUTION

3.01 INSTALLATION

A. Surface condition, bending, spacing and tolerances of placement of reinforcement shall comply with the CRSI Manual of Standard Practice. The Contractor shall be solely responsible for providing an adequate number of bars and maintaining the spacing and clearances shown on the Drawings.

B. Except as otherwise indicated on the Drawings, the minimum concrete cover of reinforcement shall be as follows:

1. Concrete cast against and permanently exposed to earth: 3 inches
2. Concrete exposed to soil, water, sludge, or weather: 2 inches
3. Concrete not exposed to soil, water, sludge, or weather: 1-1/2 inches

C. Reinforcement which will be exposed for a considerable length of time after being placed shall be coated with a heavy coat of neat cement slurry.

D. No reinforcing steel bars shall be welded either during fabrication or erection unless specifically shown on the Drawings or specified, or unless prior written approval has been obtained from the Engineer. All bars that have been welded, including tack welds, without such approval shall be immediately removed from the work. When welding of reinforcement is approved, or called for, it shall comply with AWS D1.4.

E. Reinforcing steel interfering with the location of other reinforcing steel, conduits, or embedded items, may be moved within the specified tolerances or one (1) bar diameter, whichever is greater. Greater displacement of bars to avoid interference shall only be made with the approval of the Engineer. Do not cut reinforcement to install inserts, conduits, mechanical openings, or other items without the prior approval of the Engineer.

F. Securely support and tie reinforcing steel to prevent movement during concrete placement. Secure dowels in place before placing concrete.

G. Securely tie reinforcement steel at each intersection (100 percent) for all reinforcement steel splice locations, and at every third intersection (33 percent) otherwise. Two (2) ties are required at each tie location.

H. Reinforcing steel bars shall not be field bent except where shown on the Drawings or specifically authorized in writing by the Engineer. If authorized, bars shall be cold bent around the standard diameter spool specified in the CRSI. Do not heat bars. Closely inspect the reinforcing steel for breaks. If the reinforcing steel is damaged, replace, Cadweld or otherwise repair as directed by the Engineer. Do not bend reinforcement after it is embedded in concrete unless specifically shown otherwise on the Drawings.

3.02 REINFORCEMENT AROUND OPENINGS

A. Unless specific additional reinforcement around openings is shown on the Drawings, provide additional reinforcing steel on each side of the opening equivalent to one half of the cross-sectional area of the reinforcing steel interrupted by an opening. The bars shall have sufficient length to develop bond at each end beyond the opening or penetration.

3.03 SPLICING OF REINFORCEMENT

A. Splices designated as compression splices on the Drawings, unless otherwise noted, shall be 30 bar diameters, but not less than 12 inches. The lap splice length for column vertical bars shall be based on the bar size in the column above.

B. Tension lap splices shall be provided at all laps in compliance with ACI 318/ACI 350 and as detailed on the Drawings. Class A splices may be used when 50 percent (50%) or less of the bars are spliced within the required lap length. Class B splices shall be used at all other locations.

C. Splicing of reinforcing steel in concrete elements noted to be "tension members" on the Drawings shall be avoided whenever possible. However, if required for constructability, splices in the reinforcement subject to direct tension shall be welded to develop, in tension, at least 125 percent (125%) of the specified yield strength of the bar. Splices in adjacent bars shall be offset the distance of a Class C splice.

D. Install wire fabric in as long lengths as practicable. Splices in welded wire fabric shall be lapped in accordance with the requirements of ACI 318 but not less than 12 inches. The spliced fabrics shall be tied together with wire ties spaced not more than 24 inches on center and laced with wire of the same diameter as the welded wire fabric. Do not position laps midway between supporting beams, or directly over beams of continuous structures. Offset splices in adjacent widths to prevent continuous splices.

E. Mechanical reinforcing steel splicers shall be used only where shown on the Drawings. Splices in adjacent bars shall be offset by at least 30 bar diameters. Mechanical reinforcing splices are only to be used for special splice and dowel conditions approved by the Engineer.

3.04 SHRINKAGE AND TEMPERATURE REINFORCEMENT

A. Shrinkage and temperature reinforcement shall be provided as indicated on the Drawings. Shrinkage and temperature reinforcing bars should be placed at right angles to structural steel for all structural slabs, unless otherwise specified.

3.05 ACCESSORIES

A. The Contractor shall be solely responsible for determining, providing and installing accessories such as chairs, chair bars and the like in sufficient quantities and strength to adequately support the reinforcement and prevent its displacement during the erection of the reinforcement and the placement of concrete.

B. Use precast concrete blocks where the reinforcing steel is to be supported over soil.

C. Stainless steel bar supports, steel chairs with stainless steel tips, or plastic bar supports shall be used where the chairs are set on forms for a concrete surface that will be exposed to weather, high humidity, or liquid (including bottom of slabs over liquid containing areas). Use of galvanized or plastic tipped metal chairs is permissible in all other locations unless otherwise noted on the Drawings or specified.

D. Alternate methods of supporting top steel in slabs, such as steel channels supported on the bottom steel or vertical reinforcing steel fastened to the bottom and top mats, may be used if approved by the Engineer.

3.06 INSPECTION

A. In no case shall any reinforcing steel be covered with concrete until the installation of the reinforcement, including size, spacing and position of the reinforcement has been observed by the Engineer and the Engineer's release to proceed with the concreting has been obtained. The Engineer shall be given ample prior notice of the readiness of placed reinforcement for observation. The forms shall be kept open until the Engineer has finished his/her observations of the reinforcing steel.

END OF SECTION

SECTION 03250

CONCRETE JOINTS AND JOINT ACCESSORIES

PART 1 GENERAL

1.01 SCOPE OF WORK

A. Furnish all labor, materials, equipment, and incidentals required and install accessories for concrete joints as shown on the Drawings and as specified herein.

1.02 RELATED SECTIONS

A. Section 03100 – Concrete Formwork

B. Section 03200 – Concrete Reinforcement

C. Section 03300 – Cast-in-Place Concrete

D. Section 03350 – Concrete Finishes

E. Section 03600 – Grout

F. Section 03740 – Modification or Repair of Existing Concrete

1.03 REFERENCE STANDARDS

A. ASTM International (ASTM), latest edition:

1. ASTM C1059 Standard Specifications for Latex Agents for Bonding Fresh to Hardened Concrete

2. ASTM D1751 Standard Specification for Preformed Expansion Joint Filler for Concrete Paving and Structural Construction (Nonextruding and Resilient Asphalt Types)

3. ASTM D1752 Standard Specification for Preformed Sponge Rubber, Cork, and Recycled PVC Expansion Joint Fillers for Concrete Paving and Structural Construction

1.04 SUBMITTALS

A. See Section 01300, Submittals for submittal procedures. Shop drawings and product data shall include the following:

1. Waterstops: Product data including catalog cut, technical data, storage requirements, splicing methods, and conformity to ASTM standards.

2. Pre-molded joint fillers: Product data including catalog cut, technical data, storage requirements, installation requirements, location of use, and conformity to ASTM standards.

3. Bond breaker: Product data including catalog cut, technical data, storage requirements, installation requirements, location of use, and conformity to ASTM standards.

4. Compressible joint filler: Product data including catalog cut, technical data, storage requirements, installation requirements, location of use, and conformity to ASTM standards.

5. Bonding agents: Product data including catalog cut, technical data, storage requirements, product life, application requirements, and conformity to ASTM standards.

6. Expansion joint dowels: Product data including dowels, coatings, lubricants, expansion caps, installation requirements, and conformity to ASTM standards.

B. Certifications:

1. Certification that all materials used within the joint system are compatible with each other.

PART 2 PRODUCTS

2.01 GENERAL

A. The use of manufacturer's name and model or catalog number is for the purpose of establishing the standard of quality and general configuration.

B. All materials used together in a given joint (bond breaker, backer rods, joint fillers, sealants, etc.) shall be compatible with one another. Coordinate selection of supplies and products to ensure compatibility. Under no circumstances shall asphaltic bond breakers of joint fillers be used in joints receiving sealant.

2.02 MATERIALS

A. Waterstops

1. Plastic waterstop – Non-expansion joint in liquid retaining structure: 9 inches by 3/8 inch (9″ x 3/8″) ribbed type flat waterstops in base slabs and 6 inches by 3/8 inch (6″ x 3/8″) ribbed type flat waterstops otherwise. Plastic waterstop shall be made by extruding elastomeric plastic compound with polyvinylchloride as the basic resins. Minimum tensile strength of waterstops shall be 1,750 psi. Waterstops shall be style FR-9380 (9-inch) and FR-6380 (6-inch) by Paul Murphy Plastics Co., Roseville, Michigan; Style 646 (9-inch) and Style 679 (6-inch) by Greenstreak Plastic Products, St. Louis, Missouri; Style R938 (9-inch) and R638 (6-inch) by Vinylex Corp., Knoxville, Tennessee; or approved equal.

2. Pre-formed adhesive waterstops: The waterstops shall be a formulated compound of bentonite/butyl that swells upon contact with water. The waterstops shall be Waterstop RX 101 as manufactured by CETCO of Arlington Heights, Illinois, or approved equal. Primer for the material shall be as recommended by the waterstop manufacturer. Waterstop RX 102 shall be used in all locations where there is less than 3-inch concrete cover above pre-formed adhesive waterstop.

3. PVC Retrofit Waterstop - Non-expansion joints. The "T" type waterstop shall be made by extruding elastomeric plastic compound with virgin polyvinylchloride as the basic resins. The compound shall contain no reprocessed materials. Minimum tensile strength of waterstop shall be 1750 psi. The waterstop shall conform to CRD C572. Waterstop shall be Style 609 system, complete with Type 304 stainless steel batten bars and 1/4-in expansion bolts, by Greenstreak Plastic Products, St. Louis, MO or approved equal.

B. Pre-molded Joint Filler

1. Pre-molded joint filler – structures: Sponge Rubber, pre-molded joint filler shall conform to ASTM D1752 Type I. The thickness shall be 3/4 inch unless otherwise shown on the Drawings.

2. Pre-molded joint fillers – sidewalk and roadway concrete pavements or where fiber joint filler is specifically noted on the Drawings. The joint filler shall be asphalt-impregnated fiber board conforming to ASTM D1751. Thickness shall be 3/4 inch unless otherwise shown on the Drawings.

C. Bond Breaker

1. Bond breaker tape shall be an adhesive-backed glazed butyl or polyethylene tape which will satisfactorily adhere to the pre-molded joint filler or concrete surface as required. The tape shall be the same width as the joint.

2. Bond breaker for concrete other than where tape is specifically called for shall be either bond breaker tape or a non-staining type bond prevention coating such as Williams Tilt-up Compound by Williams Distributors, Inc.; Silcoseal 77, by SCA Construction Supply Division, Superior Concrete Accessories; or approved equal.

D. Bonding Agent

1. Epoxy bonding agent shall be as specified in Section 03740, Modification or Repair of Existing Concrete.

PART 3 EXECUTION

3.01 INSTALLATION

A. Waterstops

1. Install waterstops for all joints where indicated on the Drawings. Waterstops shall be continuous around all corners and intersections so that a continuous seal is provided. Splices shall be made by welding in accordance with the manufacturer's recommendations, subject to acceptance of the Engineer. Only manufacturer's special approved tools shall be used for welding. The finished splices shall provide a cross-section that is dense and free of porosity.

2. Construct forms for construction joints in such a manner as to prevent damage to waterstops. Secure waterstops in wall joints before concrete is placed using tie wire and manufacturer's hog rings, punched flanges, or grommets. The waterstop shall be centered in the joint so that the symmetrical halves of the waterstop are equally divided between the concrete pours at the joint. Tie both edges of the waterstop to reinforcing steel with black annealed steel tie

wire as specified for tying reinforcing steel and secure in place so that the waterstop will be perpendicular to the joint and remain in the required position during concrete placement.

3. The spacing of the waterstop ties shall match the spacing of the adjacent reinforcing but need not be spaced closer than 12 inches on center.

4. Horizontal waterstops on slabs shall be clamped in position by the bulkhead (unless previously set in concrete) and the edge of the waterstops shall be lifted while placing concrete below the waterstop. Then the waterstop shall be manually forced against and into the placed concrete and covered with fresh concrete to ensure adequate encasement of the waterstop in concrete.

5. Each piece of the waterstop shall be of maximum practicable length to provide a minimum number of splices.

6. Care shall be exercised to ensure that the waterstops is completely embedded in void-free concrete.

7. Install pre-formed adhesive waterstops, including concrete surface preparation and application of primers, in accordance with the recommendations of the waterstop manufacturer.

8. PVC retrofit waterstops shall be fabricated, spliced, and located as specified for PVC standard waterstops. Existing concrete which is to receive the retrofit waterstop shall be cleaned of all foreign material and patched as necessary to form a smooth plane surface. Adhesives, fastening devices, and fastener spacing shall conform to the manufacturer's recommendations.

9. The Contractor shall take suitable precautions and means to support and protect the waterstops during the progress of the Work and shall repair or replace at Contractor's expense any waterstops damaged during the progress of the Work.

B. Construction Joints

1. Make construction joints only at locations shown on the Drawings or as approved by the Engineer. Any additional or relocation of construction joints proposed by the Contractor, must be submitted to the Engineer for written approval.

2. Additional or relocated joints should be located where they least impair strength of the member. In general, locate joints within the middle third of spans of slabs, beams and girders. However, if a beam intersects a girder at the joint, offset the joint a distance equal to twice the width of the member being connected. Locate the joints in walls and columns at the underside of floors, slabs, beams, or girders and at tops of footings or floor slabs. Do not locate joints between beams, girders, column capitals, or drop panels and the slabs above them. Do not locate joints between brackets or haunches and walls or columns supporting them.

3. All joints shall be perpendicular to main reinforcement. Continue reinforcing steel through the joints as indicated on the Drawings.

4. Provide sealant grooves for joint sealant where indicated on the Drawings.

5. At all construction joints and at concrete joints designated on the Drawings to be "roughened", uniformly roughen the surface of the concrete to a full amplitude (distance between high and low points or side to side) of approximately 1/4 inch with suitable tools to expose a fresh face. Thoroughly clean joint surfaces of loose or weakened materials by waterblasting or sandblasting and prepare for bonding.

6. In lieu of the above method for securing bond between new and set concrete, the following optional method may be used. Concrete must be allowed to set a minimum of 28 days. Use an epoxy bonding agent applied to roughened and cleaned surfaces of set concrete in strict accordance with manufacturer's recommendations and as specified in Section 03740 with respect to preparation of surfaces and applications of bonding agent.

7. Provide waterstops in all wall and slab construction joints in liquid containment structures and at other locations shown on the Drawings.

8. Keyways shall not be used in construction joints unless specifically shown on the Drawings or approved by the Engineer.

C. Control Joints

1. Provide sealant grooves, sealants and waterstops at control joints in slabs on grade and walls as detailed. Provide waterstops at all wall and slab control joints for water containment structures and at all other locations identified on the Drawings.

2. Control joints may be sawed if specifically approved by the Engineer. If control joint grooves are sawed, properly time the saw cutting with time of the concrete set. Start cutting as soon as concrete has hardened sufficiently to prevent aggregates from being dislodged by the saw. Complete cutting before shrinkage stresses have developed sufficiently to induce cracking. No reinforcing shall be cut during sawcutting.

3. Extend every other bar for reinforcing steel through control joints or as indicated on the Drawings. Where specifically noted on the Drawings, coat the concrete surface with a bond breaker prior to placing new concrete against it. Avoid coating reinforcement or waterstops with bond breaker at these locations.

END OF SECTION

THIS PAGE INTENTIONALLY LEFT BLANK

SECTION 03300

CAST-IN-PLACE CONCRETE

PART 1 GENERAL

1.01 SCOPE OF WORK

A. Furnish all labor and materials required and install cast-in-place concrete as shown on the Drawings and as specified herein.

1.02 RELATED SECTIONS

A. Section 01450 – Field Quality Control

B. Section 03100 – Concrete Formwork

C. Section 03200 – Concrete Reinforcement

D. Section 03250 – Concrete Joints and Joint Accessories

E. Section 03350 – Concrete Finishes

F. Section 03600 – Grout

G. Section 03740 – Modification or Repair of Existing Concrete

H. Division 07 – Thermal and Moisture Protection

1.03 REFERENCE STANDARDS

A. ASTM International (ASTM), latest edition:

1. ASTM C31 Standard Practice for Making and Curing Concrete Test Specimens in the Field

2. ASTM C33 Standard Specification for Concrete Aggregates

3. ASTM C39 Standard Test Method for Compressive Strength of Cylindrical Concrete Specimens

4. ASTM C42 Standard Test Method for Obtaining and Testing Drilled Cores and Sawed Beams of Concrete

5. ASTM C94 Standard Specification for Ready-Mixed Concrete

6. ASTM C143 Standard Test Method for Slump of Hydraulic Cement Concrete

7. ASTM C150 Standard Specification for Portland Cement

8. ASTM C156 Standard Test Method for Water Loss [from a Mortar Specimen] Through Liquid Membrane-Forming Curing Compounds for Concrete
9. ASTM C171 Standard Specification for Sheet Materials for Curing Concrete
10. ASTM C172 Standard Practice for Sampling Freshly Mixed Concrete
11. ASTM C173 Standard Test Method for Air Content of Freshly Mixed Concrete by the Volumetric Method
12. ASTM C231 Standard Test Method for Air Content of Freshly Mixed Concrete by the Pressure Method
13. ASTM C260 Standard Specification for Air-Entraining Admixtures for Concrete
14. ASTM C309 Standard Specification for Liquid Membrane-Forming Compounds for Curing Concrete
15. ASTM C311 Standard Test Methods for Sampling and Testing Coal Ash or Natural Pozzolans for Use in Concrete
16. ASTM C330 Standard Specification for Lightweight Aggregates for Structural Concrete
17. ASTM C494 Standard Specification for Chemical Admixtures for Concrete
18. ASTM C567 Standard Test Method for Determining Density of Structural Lightweight Concrete
19. ASTM C595 Standard Specification for Blended Hydraulic Cements
20. ASTM C617 Standard Practice for Capping Cylindrical Concrete Specimens
21. ASTM C618 Standard Specification for Coal Ash and Raw or Calcined Natural Pozzolan for Use in Concrete
22. ASTM C881 Standard Specification for Epoxy-Resin-Base Bonding Systems for Concrete
23. ASTM C1231 Standard Practice for Use of Unbonded Caps in Determination of Compressive Strength of Hardened Cylindrical Concrete Specimens
24. ASTM C1602 Standard Specification for Mixing Water Used in the Production of Hydraulic Cement Concrete
25. ASTM C1611 Standard Test Method for Slump Flow of Self-Consolidating Concrete
26. ASTM E1745 Standard Specification for Plastic Water Vapor Retarders Used in Contact with Soil or Granular Fill under Concrete Slabs

B. American Concrete Institute (ACI), latest edition:

1. ACI 211.1 Selecting Proportions for Normal-Density and High Density-Concrete-Guide
2. ACI 301 Specifications for Concrete Construction
3. ACI 303R Guide to Cast-in-Place Architectural Concrete
4. ACI 304R Guide for Measuring, Mixing, Transporting, and Placing Concrete
5. ACI 304.2R Guide to Placing Concrete by Pumping Methods
6. ACI 305R Guide to Hot Weather Concreting
7. ACI 306R Guide to Cold Weather Concreting
8. ACI 308R Guide to External Curing of Concrete
9. ACI 309R Guide for Consolidation of Concrete
10. ACI 318 Building Code Requirements for Structural Concrete and Commentary
11. ACI 350 Code Requirements for Environmental Engineering Concrete Structures and Commentary

C. National Sanitation Foundation (NSF), latest edition:

1. NSF 61 Drinking Water System Components – Health Effects

1.04 DEFINITIONS

A. Cementitious Materials: Portland cement alone or in combination with one or more of the following: blended hydraulic cement, fly ash; subject to compliance with specification requirements.

1.05 SUBMITTALS

A. See Section 01300, Submittals for submittal procedures. Shop drawings and product data shall include the following:

1. Concrete mix designs for all classes of concrete proposed for use on the project.
2. Concrete strength test results and mix design used from a record of past performance, or the laboratory trial mix designs and results, and the mix proposed for each mixture and use under this contract in accordance with ACI 301 Specifications for Concrete Construction.
3. Sources of cement, pozzolan, and aggregates.
4. Material Safety Data Sheets (MSDS) for all concrete components and admixtures.

5. Air-entraining admixture: Product data including catalog cut, technical data, storage requirements, product life, recommended dosage, temperature considerations, and conformity to ASTM standards.

6. Water reducing admixture: Product data including catalog cut, technical data, storage requirements, product life, recommended dosage, temperature considerations, and conformity to ASTM standards.

7. Mid-range water reducing admixture: Product data including catalog cut, technical data, storage requirements, product life, recommended dosage, temperature considerations, and conformity to ASTM standards.

8. High-range water reducing admixture (super-plasticizer): Product data including catalog cut, technical data, storage requirements, product life, recommended dosage, temperature considerations, retarding effect, slump range, and conformity to ASTM standards. Identify proposed locations of use.

9. Crystalline waterproofing admixture. Product data including catalog cut, technical data, manufacturer's specifications, installation instructions, test reports, storage requirements, product life, recommended dosage, temperature considerations, retarding effect, manufacturer's certification.

10. Retarding and Accelerating Admixtures: Product data including catalog cut, technical data, storage requirements, product life, recommended dosage, temperature considerations, and conformity to ASTM standards.

11. Sheet curing material: Product data including catalog cut, technical data, and conformity to ASTM standard.

12. Liquid curing compound: Product data including catalog cut, technical data, storage requirements, product life, application rate, and conformity to ASTM standards. Identify proposed locations of use.

B. Samples

1. Fine and coarse aggregates if requested for examination by the Engineer.

C. Furnish test data to indicate compliance with the following:

1. Sieve analysis, mechanical properties, and deleterious substance content for coarse and fine aggregate.

2. Chemical analysis and physical tests of each type of cement.

3. Chemical analysis and physical tests of pozzolan.

D. Certifications

1. Materials and admixtures in each class of concrete mix used in construction of liquid containing concrete structures in contact with in-process or treated drinking water shall be certified as being in compliance with ANSI/NSF Standard 61.

2. Certify admixtures used in the same concrete mix are compatible with each other and the aggregates.

3. The ready-mix supplier shall be approved in writing by the crystalline waterproofing manufacturer or manufacturer's representative.

E. Qualifications

1. Independent testing laboratory: Name, address, and qualifications. Laboratories affiliated with the Contractor or in which the Contractor or its officers have a beneficial interest are not acceptable.

1.06 QUALITY ASSURANCE

A. Manufacturer Qualifications: A concrete ready-mixed producer experienced in manufacturing ready-mixed concrete products and that complies with ASTM C94 requirements for production facilities and equipment.

B. Only one source of cementitious materials and aggregates shall be used on any one structure. Concrete shall be uniform in color and appearance.

C. Furnish manufacturer or supplier certifications for all products and materials.

D. Well in advance of placing concrete, the Contractor shall discuss with the Engineer the sources of individual materials and batched concrete proposed for use.

E. Concrete Preinstallation Conference: Engineer will conduct conference at a mutually agreed upon time and place no less than 21 calendar days prior to the first placement of structural concrete.

1. Review concrete design mixture(s) and examine procedures for ensuring quality of concrete materials. Require representatives of each entity directly concerned with cast-in-place concrete to attend, including the following:

a. Construction manager's representative/superintendent
b. Ready-mix concrete manufacturer
c. Concrete subcontractor
d. Independent testing agency
e. Concrete pumping subcontractor
f. Admixture manufacturer's representative
g. Engineer

2. Review requirements for Cast-in-Place Concrete and related Sections, including: inspection and testing agency procedures for field quality control, concrete finishes and finishing, hot and cold weather concreting procedures, curing procedures, construction, contraction, and isolation joints, joint fillers, waterstops, forms and form removal, shoring, and reshoring, vapor-retarder installation, anchor rod and anchorage device installation, steel reinforcement installation, floor and slab flatness and levelness measurement, concrete repair procedures, and concrete protection.

3. Contractor shall discuss placement methods, installation of waterstop, and concrete curing. Contractor shall propose methods and practices for implementing hot and cold weather concreting.

4. Contractor, ready-mix concrete manufacturer, and plasticizer (high-range water reducer) manufacturer's representative shall be available to discuss the properties and techniques of batching and placing plasticized concrete.

F. If during the progress of the Work, it is impossible to secure concrete of the required workability and strength with the materials being furnished, the Engineer may order such changes in proportions or materials, or both, as may be necessary to secure the desired properties. All changes so ordered shall be made at the Contractor's expense.

G. If during the progress of the Work, the materials from the sources originally accepted change in characteristics, the Contractor shall, at his/her expense, make new acceptance tests of aggregates and establish new design mixes. Such testing and design shall be accomplished with the assistance of an independent testing laboratory acceptable to the Engineer.

H. Reinforced concrete shall comply with ACI 318, ACI 350, and other stated specifications, codes and standards.

I. The responsibility for field testing is defined in Section 01450, Field Quality Control. However, the Contractor shall provide sufficient quality assurance field testing of concrete to provide confirmation of the concrete quality. Such quality assurance testing shall be at no additional cost to the Owner. Methods of testing will comply with the latest applicable ASTM methods.

J. Samples of constituents and of concrete as-placed will be subjected to laboratory tests. All materials incorporated in the Work shall conform to accepted samples.

1.07 DELIVERY, STORAGE, AND HANDLING

A. Cement: Store in weathertight buildings, bins, or silos to provide protection from dampness and contamination and to minimize warehouse set.

B. Coarse Aggregate: Arrange and use stockpiles to avoid excessive segregation or contamination with other materials or with other sizes of like aggregates. Do not use frozen or partially frozen aggregate.

C. Fine Aggregate: Arrange and use stockpiles to avoid contamination. Allow fine aggregate to drain to a uniform moisture content before using. Do not use frozen or partially frozen aggregates.

D. Admixtures: Store in closed containers to avoid contamination, evaporation or damage. Provide suitable agitating equipment to assure uniform dispersion of ingredients in admixture solutions which tend to separate. Protect liquid admixtures from freezing and other temperature changes which could adversely affect their characteristics.

E. Pozzolan: Store in weathertight buildings, bins, or silos to provide protection from dampness and contamination.

F. Sheet Curing Materials: Store in weathertight buildings or off the ground and under cover.

G. Liquid curing compounds: Store in closed containers and in accordance with manufacturer's written instructions.

PART 2 PRODUCTS

2.01 GENERAL

A. The use of manufacturer's name and model or catalog number is for the purpose of establishing the standard of quality and general configuration desired.

B. Like items or materials shall be the end products of one manufacturer in order to provide standardization for appearance, maintenance, and manufacturer's service.

2.02 MATERIALS

A. Materials shall comply with these Specifications and any applicable state or local requirements.

B. Cement: Domestic Portland cement complying with ASTM C150 or domestic blended cement complying with ASTM C595. Air entraining cements shall not be used. Cement brand shall be subject to approval by the Engineer and one brand shall be used throughout the Work. Refer to Table 1 for cement type(s) to be used with each class of concrete.

C. Fine aggregate: Washed natural sand conforming to the requirements of ASTM C33.

D. Coarse aggregate: Well-graded crushed stone or washed gravel conforming to the requirements of ASTM C33. Grading requirements shall be listed in ASTM C33 Table 2 for the specified coarse aggregate size number. Limits of Deleterious Substances and Physical Property Requirements shall be as listed in ASTM C33 Table 3 for severe weathering regions. Aggregates shall be free of any materials or substances with deleterious reactivity to alkalis in cement. Size numbers for concrete mixes as shown in Table 1 herein. The nominal maximum size of coarse aggregate can't exceed one-fifth (1/5) the narrowest form dimension, one-third (1/3) of slab total thickness, and three-fourth (3/4) the minimum clear spacing between reinforcing steel bars.

E. Water: Mixing water for concrete and water used to make ice shall be potable water free from injurious amounts of oil, alkali, organic matter, or other deleterious substances, and meet the requirements of ASTM C1602.

F. Admixtures: Admixtures shall be free of chlorides and alkalis (except for those attributable to water). When it is required to use more than one (1) admixture in a concrete mix, the admixtures shall be from the same manufacturer. Admixtures shall be compatible with the concrete mix including other admixtures.

1. Air entraining admixture. The admixture shall comply with ASTM C260. Proportioning and mixing shall be in accordance with manufacturer's recommendations.

2. Water reducing agent. The admixture shall comply with ASTM C494, Type A. Proportioning and mixing shall be in accordance with manufacturer's recommendations.

3. Mid-Range Water Reducer. The admixture shall comply with ASTM C494, Type A and Type F. Proportioning and mixing shall be in accordance with manufacturer's recommendations.

4. High-Range Water Reducer (Plasticizer). The admixture shall comply with ASTM C494 Type F or Type G and shall result in non-segregating plasticized concrete with little bleeding and with physical properties of low water/cementitious ratio concrete. The treated concrete shall be capable of maintaining plastic state in excess of 30 minutes to two (2) hours depending upon the product used. Proportioning and mixing shall be in accordance with manufacturer's recommendations.

5. Crystalline waterproofing admixture. The admixture provides a chemical treatment for the waterproofing, protection, and improvement of concrete inherent to water containing structures. The admixture shall be XYPEX C-500, C-1000, or approved equal, depending upon whether a normal or mildly delayed set is desired.

6. Retarding Admixtures. Admixtures that retard the setting time of concrete shall not be used without written approval from the Engineer. When allowed, the admixtures shall comply with ASTM C494, Type B for retarding admixtures.

7. Accelerating Admixtures. Admixtures that accelerated setting time of concrete shall not be used without written approval from the Engineer. When allowed, the admixtures shall comply with ASTM C494, Type C for accelerating admixtures.

G. Pozzolan (Fly ash)

1. Pozzolan shall be Class C fly ash complying with ASTM C618, including the requirements of Table 1 except the Loss of Ignition (LOI) shall be limited to 3 percent (3%) maximum.

2. Testing of the fly ash and/or the fly ash and concrete mixture is required to provide test data confirming that the fly ash in combination with the cement to be used meets all strength requirements and is compatible with the other concrete additives. Provide material certifications from the fly ash supplier.

H. Sheet Curing Materials: Waterproof paper, polyethylene film, or white burlap-polyethylene sheeting all complying with ASTM C171.

I. Liquid Curing Compound: Liquid membrane-forming curing compound shall comply with the requirements of ASTM C309 Type 1-D (clear or translucent with fugitive dye) and shall contain no wax, paraffin, or oil.

J. Vapor Retarder: Vapor retarder shall meet the requirements of ASTM E1745 Class A and be Stego Wrap 10 mil Class A vapor retarder or approved equal. Include manufacturer’s recommended adhesive, pressure-sensitive joint tape and other accessories as required.

2.03 CONCRETE MIXES

A. Development of mix designs and testing shall be by a concrete ready-mix supplier acceptable to the Engineer, engaged by and at the expense of the Contractor.

B. Select proportions of ingredients to meet the design strength and materials limits specified in Table 1 and produce concrete having proper workability, durability, strength, appearance, and other required properties. Proportion ingredients to produce a homogenous mixture which will readily work in corners and angles of forms and around reinforcement without permitting materials to segregate or allowing excessive free water to collect on the surface.

C. Prepare concrete mix designs for each type and strength of concrete, proportioned on the basis of field test records or laboratory trial mixtures in accordance with ACI 301 and ACI 350. Concrete design mixes shall be based on historical experience with prior mixes or, if historical data and test records are not available, be developed by laboratory trial mixtures.

1. Concrete mix designs proportioned based on historical experience - Field test records used shall be from prior concrete mixes with materials, mixture proportions, quality control procedures, and conditions similar to those expected and for a class of concrete within 1000 psi of that specified for the Work. The set of field strength test records for each class of concrete shall be no more than 24 months old (12 months old for concrete mixes proposed for liquid containing concrete structures) and spanning not less than 45 calendar days in accordance with ACI 301 and ACI 350. Field test records shall be used to calculate sample standard deviation and establish the required average strength in accordance with ACI 301 and ACI 350. Proposed concrete mix designs shall produce an average compressive strength equal to or greater than the required average compressive strength.

2. Concrete mix designs proportioned based on trial mixtures - If acceptable field test records are not available, concrete mixtures shall be proportioned based on trial mixtures that comply with the following:

a. Materials used in trial mixtures shall be those proposed for the work.

b. A minimum of three (3) trial mixtures for each concrete class with a range of proportions that will produce a range of compressive strengths encompassing the required average compressive strength.

c. Trial mixtures shall be proportioned to produce slumps within the range specified for the proposed work, and for air-entrained concrete, the air content shall be within the range specified for the proposed work.

d. Make and cure at least three (3) 4 x 8-inch test cylinders for each trial mixture in accordance with ASTM C192 for each test age. Cylinders shall be tested at 7 and 28 days in accordance with ASTM C39.

e. A curve shall be established showing the relationship between water to cementitious materials ratio and compressive strength. The curve shall be based on at least three points representing batches which produce strengths above and below that required. Each point shall represent the average of at least three test cylinders tested at seven (7) and 28 days.

f. The compressive strength test results at 28 days shall be used to establish proportions of the concrete mixture proposed for the work. The required average strength of proposed concrete mixture shall exceed the specified concrete compressive strength by 1000 psi for concrete with a specified strength less than 3000 psi. For concrete with a specified strength of 3000 psi to 5000 psi, the required average strength of proposed concrete mixture shall exceed the specified concrete compressive strength by 1200 psi.

g. The proposed concrete mixture for each class of concrete shall be that shown by the curve to produce the required average strength indicated, but in no case shall the maximum water to cementitious ratio specified in Table 1 be exceeded nor shall the minimum cementitious materials be less than specified in Table 1.

D. Compressive Tests: The proposed concrete mix or mixes shall be tested to demonstrate compliance with the compression strength requirements in conformity with the provisions of ACI 301.

E. Entrained air, as measured by ASTM C231, shall be as shown within the range of 4.0 to 7.0%.

1. If the air entraining agent proposed for use in the mix requires testing methods other than ASTM C231 to accurately determine air content, make special note of this requirement in the admixture submittal required under paragraph 1.04.

F. Slump of the concrete as measured by ASTM C143, shall be 2-inches to 4-inches maximum at the point of delivery with no tolerances. If a water reducer is used to increase the concrete slump, the slump shall be 2 to 4-inches maximum and measured at the point of delivery before a mid-range or high-range water reducer is added to the concrete mix. After the addition of a mid-range or high-range water reducer, concrete shall have a slump ranging from 6-inches to 9-inches maximum.

G. Proportion admixtures according to the manufacturer's recommendations. Two (2) or more admixtures specified may be used in the same mix provided that the admixtures in combination retain full efficiency and have no deleterious effect on the concrete or on the properties of each other.

H. Where synthetic reinforcing fibers are specified to be used in Table 1, fibers shall be added from the manufacturer's pre-measured bags and according to the manufacturer's recommendations in a manner which will ensure complete dispersion of the fiber bundles as single monofilaments within the concrete.

Table 1											
Concrete Class	**Cement 1**	**Compressive Strength 2**	**Minimum Cementitious Materials (Lb/yd^3)**	**Fine Aggregate3**	**Coarse Aggregate4**	**W/C Ratio 5**	**Fly Ash 6**	**AE 7**	**WR 8**	**HRWR 9**	**CWA 10**
A	C150 Type I or C595 Type 1L	2,500	423	C33	57	0.62 max	-	No	Yes	No	No
B	C150 Type I or C595 Type 1L	3,500	517	C33	57	0.54 max	15-25	Yes	Yes	No	No
C	C150 Type I or C595 Type 1L (MS)	4,500	564	C33	57	0.42 max	15-25	Yes	Yes	Yes	Yes(11)
D	C150 Type I or C595 Type 1L	5,000	658	C33	67	0.40 max	15-25	Yes	Yes	No	No
E(12)	C150 Type I or C595 Type 1L	3,000	470	C33	7	0.54 max	-	No	Yes	Yes	No

NOTES:

1. ASTM designation. ASTM C595 cements that include ASTM C1157 cements are not permitted. Limit content of limestone in ASTM C595 cements to 10 percent.
2. Minimum compressive strength in psi at 28 days
3. ASTM designation
4. Size Number in ASTM C33
5. W/C is Water Cementitious ratio by weight
6. Fly ash, percent of total cementitious material by weight. Reduce fly ash percentage to fifteen to twenty percent (15-20%) from October through March. Fly ash may be used in any mix in accordance with the requirements of Article 2.02.G and other provisions of this section
7. AE is air entraining admixture
8. WR is water reducing or mid-range water admixture
9. HRWR is high range water reducer
10. CWA is crystalline waterproofing admixture
11. Crystalline waterproofing admixture shall be added to all Class C Concrete proposed for water containing structures (i.e., base slabs, walls, etc.)
12. Class E Mix: Add 1.5 pounds of synthetic reinforcing fibers, as specified in Section 03200, Concrete Reinforcement, per cubic-yard of concrete

PART 3 EXECUTION

3.01 MEASURING MATERIALS

A. Concrete shall be composed of cementitious materials, fine aggregate, coarse aggregate, water, and admixtures as specified and shall be produced by a plant acceptable to the Engineer. The addition of any mid-range or high range water reducer to increase the concrete slump above the specified 4 inch maximum will occur on site after concrete has been tested for slump and air content (if as directed by Engineer).

B. Measure materials for batching concrete by weighing in conformity with and within the tolerances given in ASTM C94 except as otherwise specified. Scales shall have been certified by the local Sealer of Weights and Measures within one (1) year of use.

C. Measure the amount of free water in fine aggregates with a moisture meter. Compensate for varying moisture contents of fine aggregates. Record the number of gallons of water including ice as batched on printed batching tickets. Indicate on the batching ticket the allowable amount of water that can be added at the point of delivery.

D. Admixtures shall be dispensed either manually using calibrated containers or measuring tanks, or by means of an automatic dispenser approved by the manufacturer of the specified admixture.

1. Charge air-entraining and chemical admixtures into the mixer as a solution using an automatic dispenser or similar metering device.

2. Inject multiple admixtures separately during the batching sequence.

3.02 MIXING AND TRANSPORTING

A. Concrete shall be ready-mixed concrete produced by equipment acceptable to the Engineer. No hand-mixing will be permitted. Clean each transit mix truck drum and reverse drum rotation before the truck proceeds under the batching plant. Equip each transit-mix truck with a continuous, non-reversible, revolution counter showing the number of revolutions at mixing speeds.

B. Ready-mix concrete shall be transported to the site in watertight agitator or mixer trucks loaded not in excess of their rated capacities as stated on the name plate.

C. Prior to test sampling and placing concrete, water may be added at the point of delivery, as indicated below:

1. Concrete slump may be adjusted by adding water up to the allowable amount indicated on the delivery ticket. The water amount added shall not exceed the amount allowed in the accepted mixture proportions.

2. The addition of water shall not result in an exceedance of the maximum water/cementitious materials ratio of the concrete mix design, nor shall it result in an exceedance of the maximum permitted slump of 4 inches without the addition of approved concrete admixtures.

3. The amount of water added at the point of delivery shall be recorded on the concrete delivery ticket by the receiver of the concrete and the receiver shall initial the ticket.

4. Added water shall be incorporated by additional mixing of at least 35 revolutions.

5. Do not add water to the concrete after mid-range or high-range water reducing or plasticizing admixtures have been added to the concrete at the point of delivery.

6. Do not add water to the concrete after test sampling or during placement of the concrete.

.

D. All central plant and rolling stock equipment and methods shall comply with ACI 318, ACI 350 and ASTM C94.

E. Select equipment of size and design to ensure continuous flow of concrete at the delivery end. Metal or metal-lined non-aluminum discharge chutes shall be used and shall have slopes not exceeding one (1) vertical to two (2) horizontal and not less than one (1) vertical to three (3) horizontal. Chutes more than 20 feet long and chutes not meeting slope requirements may be used if concrete is discharged into a hopper before distribution.

F. Re-tempering of concrete or mortar that has partially hardened (that is, mixing with or without additional cement, aggregate, or water) will not be permitted.

G. Handle concrete from mixer to placement as quickly as practicable while providing concrete of required quality in the placement area. Dispatch trucks from the batching plants so they arrive at the work site just before the concrete is required, thus avoiding excessive mixing of concrete while waiting or delays in placing successive layers of concrete in the forms.

H. Furnish a delivery ticket for ready mixed concrete to the Engineer as each truck arrives. Each ticket shall show the concrete mix designation, provide a printed record of the weight of cementitious materials and each aggregate as batched individually. Use the type of indicator that returns for zero punch or returns to zero after a batch is discharged. Clearly indicate the weight of fine and coarse aggregate, cementitious materials and water in each batch, the quantity delivered, the time any water is added, and the numerical sequence of the delivery. Show the time of day batched and time of discharge from the truck.

I. Temperature Mixing Time Control

1. In cold weather (see paragraph 3.07.D) maintain the as-mixed temperature of the concrete and concrete temperatures at the time of placement in the forms as indicated in Table 2.

2. If water or aggregate has been heated, combine water with aggregate in the mixer before cementitious material is added. Do not add cementitious material to mixtures of water and aggregate when the temperature of the mixture is greater than 90°F.

3. In hot weather, cool ingredients before mixing to maintain temperature of the concrete below the maximum placing temperature of 90°F. If necessary, substitute well-crushed ice or chilled water for all or part of the mixing water. The water equivalent of ice shall be calculated and added to the total amount of mixing water. The specified water to cementitious materials ratio of the concrete mix shall not be exceeded by the addition of ice.

4. Discharge of the concrete shall be completed within 1-1/2 hours (90 minutes), after the introduction of the mixing water to the cementitious materials and aggregates or the introduction of the cementitious material to the aggregates. The maximum time interval between the addition of mixing water and/or cementitious material to the batch and placing of concrete in the forms shall be reduced to the maximum time in Table 2 for concrete mixtures that do not include retarders.

Table 2	
Ambient Air Temperature	**Maximum Time**
85°F to 90°F (32°C) higher than 90°F	75 minutes 60 minutes

The maximum time for discharge of concrete mixtures with an approved retarding admixture or high-range water reducing and retarding admixture shall not exceed 1-1/2 hours (90 minutes). Temperature of the concrete shall not exceed 90 Degrees F.

3.03 INSPECTION AND COORDINATION

A. The batching, mixing, transporting, placing, and curing of concrete shall be subject to the inspection of the Engineer at all times. The Contractor shall advise the Engineer of readiness to proceed with each concrete placement at least 24 hours in advance. The Engineer will inspect the preparations for concreting including the preparation of previously placed concrete; the reinforcing; and the alignment, cleanliness, and tightness of formwork. No placement shall be made without the inspection and acceptance of the Engineer.

3.04 CONCRETE APPEARANCE

A. Concrete mix showing either poor cohesion or poor coating of the coarse aggregate with paste shall be remixed. If this does not correct the condition, the concrete shall be rejected. If the slump is within the allowable limit, but excessive bleeding, poor workability, or poor finishability are observed, changes in the concrete mix shall be obtained only by adjusting one or more of the following:

1. The gradation of aggregate
2. The proportion of fine and coarse aggregate
3. The percentage of entrained air, within the allowable limits

B. Concrete for the Work shall provide a homogeneous structure which, when hardened, will have the required strength, durability, and appearance. Mixtures and workmanship shall be such that concrete surfaces, when exposed, will require no finishing. When concrete forms are stripped, the concrete when viewed in good lighting from 10 feet away shall be pleasing in appearance, and at 20 feet shall show no visible defects.

3.05 PLACING AND COMPACTING

A. Placing

1. Verify that all the formwork completely encloses concrete to be placed and is securely braced prior to concrete placement. Remove ice, excess water, dirt, and other foreign materials from forms. Confirm that reinforcement and other embedded items are securely in place. Have a competent workman at the location of the pour who can assure that reinforcement and embedded items remain in designated locations while concrete is being placed. Add water to semiporous subgrades or forms to eliminate suction of water from the mix. Seal extremely porous subgrades in an approved manner.

2. Deposit concrete as near its final position as possible to avoid segregation due to rehandling or flowing. Place concrete continuously at a rate which ensures the concrete is being integrated with fresh plastic concrete. Do not deposit concrete which has partially hardened or has been contaminated by foreign materials or on concrete which has hardened sufficiently to cause formation of seams or planes of weakness within the section. If the section cannot be placed continuously, place construction joints as specified or as approved.

3. Pumping of concrete will be permitted. Use a mix design suitable for pumping and submit for approval. The maximum size of coarse aggregate used in the mix should be limited to one-third of the smallest inside diameter of the delivery system.

4. Remove temporary spreaders from forms when the spreader is no longer useful. Temporary spreaders may remain embedded in concrete only when made of galvanized metal or concrete and if prior approval has been obtained.

5. Do not place concrete for supported elements until concrete previously placed in the supporting element (columns, slabs, and/or walls) has reached adequate strength. Prepare previously placed and hardened concrete surfaces by cleaning using steel brushes and applying bonding agent in accordance with manufacturer's instructions.

6. Where surface mortar is to form the base of a finish, especially surfaces designated to be painted, work coarse aggregate back from forms with a suitable tool to bring the full surface of the mortar against the form. Prevent the formation of excessive surface voids.

7. Slabs

   a. After suitable bulkheads, screeds, and jointing materials have been positioned, the concrete shall be placed continuously between construction joints beginning at a bulkhead, edgeform, or corner. Each batch shall be placed into the edge of the previously placed concrete to avoid stone pockets and segregation.

   b. Avoid delays in casting. If there is a delay in casting, the concrete placed after the delay shall be thoroughly spaded and consolidated at the edge of that previously placed to avoid cold joints. Concrete shall then be brought to correct level and struck off with a straightedge. Bull floats or darbies shall be used to smooth the surface, leaving it free of humps or hollows.

c. Where slabs are to be placed integrally with the walls below them, place the walls and compact as specified. Allow one (1) hour to pass between placement of the wall and the overlying slab to permit consolidation of the wall concrete. Keep the top surface of the wall moist so as to prevent cold joints.

8. Formed Concrete

a. Place concrete in forms using tremie tubes and taking care to prevent segregation. Bottom of tremie tubes shall preferably be in contact with the concrete already placed. Do not permit concrete to drop freely more than 4 feet. Place concrete for walls in 12-inch to 24-inch lifts, keeping the surface horizontal. If plasticized concrete is used, the maximum lift thickness may be increased to 7 feet, and the maximum free fall of concrete shall not exceed 15 feet.

B. Compacting

1. Consolidate concrete by vibration, puddling, spading, rodding, or forking so that concrete is thoroughly worked around reinforcement, embedded items, and openings, and into corners of forms. Puddling, spading, etc. shall be continuously performed along with vibration of the placement to eliminate air or stone pockets which may cause honeycombing, pitting, or planes of weakness.

2. All concrete shall be placed and compacted with mechanical vibrators. The number, type, and size of the units shall be approved by the Engineer in advance of placing operations. No concrete shall be ordered until sufficient approved vibrators (including standby units in working order) are on the job.

3. A minimum frequency of 7,000 revolutions per minute is required for mechanical vibrations. Insert vibrators and withdraw at points from 18 inches to 30 inches apart. At each insertion, vibrate sufficiently to consolidate concrete, generally from 5 to 15 seconds. Do not over vibrate so as to segregate. Keep a spare vibrator on the site during concrete placing operations.

4. Concrete Slabs: Concrete for slabs shall be consolidated with internal vibrators and (optionally) with vibrating screeds. Vibrators shall always be placed into concrete vertically and shall not be laid horizontally or laid over.

5. Walls and Columns: Internal vibrators (rather than form vibrators) shall be used unless otherwise approved by the Engineer. In general, for each vibrator needed to melt down the batch at the point of discharge, one or more additional vibrators must be used to densify, homogenize, and perfect the surface. The vibrators shall be inserted vertically at regular intervals, through the fresh concrete, and slightly into the previous lift, if any.

6. Amount of Vibration: Vibrators are to be used to consolidate properly placed concrete but shall not be used to move or transport concrete in the forms. Vibration shall continue until:

a. Frequency returns to normal
b. Surface appears liquefied, flattened, and glistening
c. Trapped air ceases to rise
d. Coarse aggregate has blended into surface but has not disappeared

3.06 INSTALLATION – CONCRETE TOPPING

A. Place concrete topping over concrete slabs at locations shown on the Drawings. The finished surface of the concrete topping and concrete structural slab below the concrete topping shall be as specified in Section 03350 Concrete Finishes.

B. Prior to placing concrete topping remove the debris and clean the surface by sweeping and vacuuming all dirt and other foreign materials. Wash structural slab clean removing any oils or grease.

C. Saturate the concrete surface prior to placement of the concrete topping slab. Saturation may be achieved by ponding, by the use of soaker hoses, or by other methods acceptable to the Engineer. Remove excess free-standing water from the structural slab just prior to placement of the concrete topping. The structural slab surface receiving the concrete topping shall be saturated and surface dry.

D. Thoroughly broom a cement slurry into the concrete structural slab surface immediately ahead of placing the concrete topping so that the slurry is moist when the grout is placed. Work the slurry over the surface until the surface is coated with approximately 1/16- to 1/8-inch-thick cement paste.

1. A bonding grout may be substituted for the cement slurry. The bonding grout shall be composed of one part Portland cement, 1.5 parts fine sand, an approved bonding admixture, and water mixed to achieve the consistency of thick paint.

E. Provide tooled control joints as indicated on the Drawings.

F. Finish and cure the concrete topping as specified in this Specification.

G. Concrete or cement grout topping to be placed by mechanical process equipment shall be as specified in other sections of these Specifications.

3.07 CURING AND PROTECTION

A. Protect all concrete work against damage from the elements and defacements of any nature during construction operations.

B. Curing Methods

1. Curing Methods for Concrete Surfaces: Cure concrete to retain moisture and maintain specified temperatures at the surface for a minimum of seven (7) days after placement. Curing methods to be used are as follows:

a. Water Curing: Keep entire concrete surface wet by ponding, continuous sprinkling, or covered with saturated burlap. Begin wet cure as soon as concrete attains an initial set and maintain wet cure over 24 hours a day.

b. Sheet Material Curing: Cover entire surface with sheet material. Securely anchor sheeting to prevent wind and air from lifting the sheeting or entrapping air under the sheet. Place and secure sheet as soon as initial concrete set occurs.

c. Liquid Membrane Curing: Apply over the entire concrete surface except for surfaces to receive additional concrete. Curing compound shall not be placed on any concrete surface where additional concrete is to be placed, where surface coatings are to be used, or where the concrete finish requires an integral floor product. Curing compound shall be applied as soon as the free water on the surface has disappeared and no water sheen is visible, but not after the concrete is dry or when the curing compound can be absorbed into the concrete. Application shall be in compliance with the manufacturer's recommendations.

2. Specified applications of curing methods:

a. Slabs for Water Containment Structures: Water curing only

b. Slabs on Grade and Footings (not used to contain water): Water curing, sheet material curing, or liquid membrane curing

c. Structural Slabs (other than water containment): Water curing or liquid membrane curing

d. Horizontal Surfaces that will receive additional concrete, coatings, grout, or other material that requires bond to the substrate: Water curing

e. Formed Surfaces: None if non-absorbent forms are left in place seven (7) days. Water cure if absorbent forms are used. Sheet cured for liquid containing walls and other parts of the work required to be watertight if forms are removed prior to seven (7) days. Concrete shall be maintained in a moist condition for the seven (7) day curing period. Sheet cured or liquid membrane cured for other formed surfaces not required to be watertight if forms are removed prior to seven (7) days. Exposed horizontal surfaces of formed walls or columns shall be water cured for seven (7) days or until next placement of concrete is made

f. Concrete Joints: Water cured or sheet material cured

C. Cold Weather Concreting

1. For this Specification, "cold weather" is defined as a period when, for more than three (3) consecutive days, the average daily outdoor temperature is less than 40°F. The average daily temperature shall be calculated as the average of the highest and the lowest temperature during the period from midnight to midnight.

2. Concrete placed during cold weather shall be batched, delivered, cured, and protected in compliance with the recommendations of ACI 306R and the additional requirements of this Section.

3. The Contractor shall discuss proposed cold weather work plan with the Engineer. The discussion shall encompass the methods and procedures proposed for use during the cold weather including the production, transportation, placement, protection, curing, and temperature monitoring of the concrete. The procedures to be implemented upon abrupt changes in weather conditions or equipment failures shall also be discussed. Cold weather concreting shall not begin until the work plan is acceptable to the Engineer.

4. The minimum temperature of concrete immediately after placement and during the protection period shall be as indicated in Table 3. The temperature of the concrete in place and during the protection period shall not exceed these values by more than 20°F. Prevent overheating and non-uniform heating of the concrete.

Table 3 Concrete Temperatures Minimum Dimension of Section		
	<12 inches	12 to 36 inches
Min. concrete temperature:	55°F	50°F

5. During periods of cold weather, concrete shall be protected to provide continuous warm, moist curing (with supplementary heat when required) for a total of at least 350 degree-days of curing.

   a. Degree-days are defined as the total number of 24-hour periods multiplied by the weighted average daily air temperature at the surface of the concrete (e.g., 5 days at an average 70°F = 350 degree-days).

   b. To calculate the weighted average daily air temperature, sum hourly measurements of the air temperature in the shade at the surface of the concrete taking any measurement less than 50°F as 0°F. Divide the sum thus calculated by 24 to obtain the weighted average temperature for that day.

6. Salt, manure, or other chemicals shall not be used for protection.

7. At the end of the protection period, allow the concrete to cool gradually to the ambient temperature. If water curing has been used, the concrete shall not be exposed to temperatures below those shown in Table 3 unless at least 24 hours has elapsed since water curing has been terminated.

8. During periods not defined as cold weather, but when freezing temperatures are expected or occur, protect concrete surfaces from freezing for the first 24 hours after placing.

D. Hot Weather Concreting

1. For this Specification, "hot weather" is defined as any combination of high air temperatures, low relative humidity and wind velocity which produces a rate of evaporation as estimated in ACI 305R, approaching or exceeding 0.2 pounds per square foot per hour (lb/ft²-hr).

2. Concrete placed during hot weather, shall be batched, delivered, placed, cured, and protected in compliance with the recommendations of ACI 305R and the additional requirements of this Specification.

   a. Temperature of concrete being placed shall not exceed 90°F and every effort shall be made to maintain a uniform concrete mix temperature below this level. The temperature of the concrete shall be such that it will cause no difficulties from loss of slump, flash, set, or cold joints.

   b. All necessary precautions shall be taken to promptly deliver, to promptly place the concrete upon its arrival at the job and to provide vibration immediately after placement.

c. The Engineer may direct the Contractor to immediately cover plastic concrete with sheet material.

3. The Contractor shall discuss with the Engineer a work plan describing the methods and procedures he/she proposes to use for concrete placement and curing during hot weather periods. Hot weather concreting shall not begin until the work plan is acceptable to the Engineer.

3.08 REMOVAL OF FORMS

A. Except as otherwise specifically authorized by the Engineer, forms shall not be removed before the concrete has attained a strength of at least 30 percent (30%) of its specified strength, nor before reaching the number of degree-days of curing as indicated in Table 4 (whichever is longer).

Table 4

Forms for	**Degree Days**
Beams and slabs	500
Walls and vertical surfaces	100

(See definition of degree-days in paragraph 3.07.C.5.a)

B. Shores shall not be removed until the concrete has attained at least 70 percent (70%) of its specified design strength and sufficient strength to support safely its own weight and the construction live loads upon it.

C. When removal of formwork is based on concrete reaching a specified in-place compressive strength, concrete strength data shall be based on tests of a “field set” of field-cured cylinders. The field-cured cylinders shall be cured under the same conditions for the concrete the test specimens represent. Cure the cylinders under the same temperature and moisture conditions as used for the concrete they represent.

3.09 FIELD TESTS

A. Composite samples of fresh concrete shall be obtained in accordance with ASTM C172. Sets of field control cylinder specimens will be taken during the progress of the Work, in compliance with ASTM C31. The number of sets of concrete test cylinders taken of each class of concrete placed each day shall not be less than once a day, nor less than once for each 50 cubic-yards of concrete.

1. Cast and laboratory cure a "set" of test cylinders shall consist of five (5) 4-inch by 8-inch cylinders: one (1) to be broken at seven (7) days and three (3) to be broken and their strengths averaged at 28 days. The fifth may be used for a special break at three (3) days or to verify strength after 28 days if 28 days breaks are low.

2. Cast and field cure a "field set" of test cylinders from the composite sample when verification of concrete reaching a specified in-place compressive strength is required for removal of formwork. The "field set" of test cylinders is in addition to the laboratory cured "set" of test cylinders. A "field set" of test cylinders shall consist of a minimum of three (3) 4-inch by 8-inch cylinders. The three (3) cylinders shall be broken and their strengths averaged to determine the in-place compressive strength at the concrete age requested by the Contractor. The cost of additional field cured concrete cylinders cast and tested shall be by the Contractor.

3. Cylinders should be capped before testing to maintain a uniform load distribution. Cylinders are general capped with sulfur mortar in compliance with ASTM C617 or neoprene pad caps in compliance with ASTM C1231.

4. When the average 28-day compressive strength of the cylinders in any set falls below the required compressive strength or below proportional minimum seven-day strengths (where proper relation between 7- and 28-day strengths have been established by tests), proportions, water content, or temperature conditions shall be changed to achieve the required strengths.

B. The Contractor shall cooperate in the making of tests by allowing free access to the work for the selection of samples; providing an insulated closed curing box for specimens; affording protection to the specimens against damage or loss through Contractor's operations; and furnishing material and labor required for the purpose of taking concrete cylinder samples. Curing boxes shall be acceptable to the Engineer.

C. Slump tests will be made in the field immediately prior to placing the concrete. Such tests shall be made in accordance with ASTM C143. If the slump is greater than the specified range, the concrete shall be rejected. If slump test resulted in a shear slump failure, the slump test should be repeated. If shear slump failure re-occurs the concrete batch is to be rejected.

D. Slump flow tests will be made in the field immediately prior to placing Self Compacting Concrete (SCC) in compliance with ASTM C1611. Slump flow spread average diameters should not exceed 30 inches.

E. Air Content: Test for air content shall be made on a fresh concrete sample. Air content for concrete made of ordinary aggregate having low absorption shall be made in compliance with either the pressure method complying with ASTM C231 or by the volumetric method complying with ASTM C173. If lightweight aggregates or aggregates with high absorptions are used, the latter test method shall be used.

F. Temperature. Test for temperature shall be made on a fresh concrete sample in accordance with ASTM C1064.

G. Density. Test for density shall be made in accordance with ASTM C138.

3.10 FIELD CONTROL

A. The Engineer may require that cores be taken from any questionable area in the concrete work such as construction joints and other locations as required for determination of concrete quality. The results of tests on such cores shall be the basis for acceptance, rejection, or determining the continuation of concrete work.

B. The Contractor shall cooperate in obtaining cores by allowing free access to the Work and permitting the use of ladders, scaffolding and such incidental equipment as may be required. The Contractor shall repair all core holes. The work of cutting and testing the cores will be in accordance with Section 01450, Field Quality Control.

3.11 FAILURE TO MEET REQUIREMENTS

A. Strength of concrete will be satisfactory if every average of three consecutive strength tests equals or exceeds the specified compressive strength and no compressive strength test value falls below the specified compressive strength by more than 500 psi. If either of these two requirements are not met, the Engineer shall have the right to require changes in proportions outlined to apply to the remainder of the Work. Furthermore, the Engineer shall have the right to require additional curing on those portions of the structure represented by the test specimens which failed. The cost of such additional curing shall be at the Contractor's expense. In the event that such additional curing does not give the strength required, as evidenced by core and/or load test, the Engineer shall have the right to require strengthening or replacement of those portions of the structure which fail to develop the required strength. The cost of all such core borings and/or load tests and any strengthening or concrete replacement required because strengths of test specimens are below that specified, shall be entirely at the expense of the Contractor. In such cases of failure to meet the strength requirements the Contractor and Engineer shall confer to determine what adjustment, if any, can be made in compliance with the subsections titled "Strength" and "Failure to Meet Strength Requirements" of ASTM C94. The “purchaser” referred to in C94 is the Contractor in this Specification.

B. When the tests on control specimens of concrete fall below the required strength, the Engineer will permit check tests for strengths to be made by means of typical cores drilled from the structure in compliance with ASTM C42 and C39. Concrete in an area represented by core tests shall be considered satisfactory if the average of three cores is equal to at least 85 percent of the specified compressive strength and no single core is less than 75 percent of the specified compressive strength. Additional testing of cores extracted from locations represented by erratic core strength results may be permitted. In the case of failure of the cores, the Engineer, in addition to other resources, may require, at the Contractor's expense, load tests on any one of the slabs, beams, piles, caps, and columns in which such concrete was used. Test need not be made until concrete has aged 60 days.

C. Should the strength of test cylinders fall below 60 percent (60%) of the required minimum 28-day strength, the concrete shall be rejected and shall be removed and replaced.

3.12 PATCHING

A. As soon as the forms have been stripped and the concrete surfaces exposed, fins and other projections shall be removed; recesses left by the removal of form ties shall be filled; and surface defects, which do not impair structural strength, shall be repaired. Clean all exposed surfaces and adjoining work stained by leakage of concrete, to approval of the Engineer.

B. Immediately after removal of forms remove plugs and break off metal ties as required by Section 03100, Concrete Formwork. Holes are then to be promptly filled upon stripping as follows: Moisten the hole with water, followed by a 1/16-inch brush coat of neat cement slurry mixed to the consistency of a heavy paste. Immediately plug the hole with a 1 to 1.5 mixture of cement and concrete sand mixed slightly damp to the touch (just short of "balling"). Hammer the grout into the hole until dense, and an excess of paste appears on the surface on the form of a spiderweb. Trowel smooth with heavy pressure. Avoid burnishing.

C. When patching exposed surfaces, the same source of cement and sand as used in the parent concrete shall be employed. Adjust color, if necessary, by addition of proper amounts of white cement. Rub lightly with a fine Carborundum stone at an age of one (1) to five (5) days if necessary to bring the surface down with the parent concrete. Exercise care to avoid damaging or staining the virgin skin of the surrounding parent concrete. Wash thoroughly to remove all rubbed matter.

3.13 REPAIRS

A. It is the intent of this Specification to require quality work including adequate forming, proper mixture and placement of concrete, and curing so completed concrete surfaces will require no patching.

B. Defective concrete and honeycombed areas as determined by the Engineer shall be repaired as specified in Section 03740, Modification or Repair of Existing Concrete.

3.14 SCHEDULE

A. The following (Table 5) represents the general applications for the various concrete classes and design strengths:

Table 5

Class	Design Strength (psi)	Description
A	2,500	Concrete fill and duct and pipe encasement
B	3,500	Concrete overlay slabs (sidewalks) and pavements
C	4,500	Base slabs and walls for liquid containing structures shall require crystalline water proofing admixture, CWA. Refer to Paragraph 2.03H Table 1
C	4,500	Walls, slabs on grade, suspended slab and beam systems, columns, grade beams and all other structural concrete
D	5,000	Precast and precast prestressed concrete
E	3,000	Concrete topping over precast roof tees

END OF SECTION

THIS PAGE INTENTIONALLY LEFT BLANK

SECTION 03350

CONCRETE FINISHES

PART 1 GENERAL

1.01 SCOPE OF WORK

A. Furnish all labor, materials, equipment, and incidentals required to finish cast-in-place concrete and surfaces as shown in the Drawings and as specified herein.

1.02 RELATED SECTIONS

A. Section 03100 – Concrete Formwork

B. Section 03300 – Cast-in-Place Concrete

C. Section 03600 – Grout

D. Section 03740 – Modification or Repair of Existing Concrete

E. Division 07 – Thermal and Moisture Protection

F. Division 09 – Finishes

1.03 REFERENCE STANDARDS

A. ASTM International (ASTM), latest edition:

1. ASTM C33 Standard Specification for Concrete Aggregates
2. ASTM C150 Standard Specification for Portland Cement
3. ASTM C171 Standard Specification for Sheet Materials for Curing Concrete
4. ASTM C309 Standard Specification for Liquid Membrane-Forming Compounds for Curing Concrete
5. ASTM C881 Standard Specification for Epoxy-Resin-Base Bonding Systems for Concrete

B. American Concrete Institute (ACI), latest edition:

1. ACI 117 Specifications for Tolerances for Concrete Construction and Materials and Commentary
2. ACI 301 Specifications for Structural Concrete
3. ACI 308R Guide to External Curing Concrete

4. ACI 503.4 Standard Specifications for Repairing Concrete with Epoxy Mortars

1.04 SUBMITTALS

A. See Section 01300, Submittals for submittal procedures. Product data shall include the following:

1. Concrete sealer: Confirmation that the sealer is compatible with additionally applied coatings shall also be submitted.

1.05 QUALITY ASSURANCE

A. Finishes

1. For concrete which will receive applied finishes or materials, the surface finish specified is required for the proper application of the specified manufacturer's products. Where alternate products are approved for use, determine if changes in finishes are required and provide the proper finishes to receive these products.

2. Changes in finishes made to accommodate products different from those specified shall be performed at no additional cost to the Owner. Submit the proposed new finishes and their construction methods to the Engineer for approval.

B. Services of Manufacturer's Representative

1. The Contractor shall make available at no extra cost to the Owner, upon 72-hour notification, the services of a qualified field representative of the manufacturer of curing compound, sealer or hardener to instruct the user on the proper application of the product under prevailing job conditions.

PART 2 PRODUCTS

2.01 MATERIALS

A. Concrete sealer shall be "Protecrete" by Advanced Concrete Technology Inc., Dallas, Texas, or approved equal.

PART 3 EXECUTION

3.01 FORMED SURFACES

A. Forms shall not be removed before the requirements of Section 03300, Cast-in-Place Concrete, have been satisfied.

B. Exercise care to prevent damaging or obliterating the lines of chamfers, rustications, or corners when removing the forms or performing any other work adjacent thereto.

C. Surface defects to be repaired include form-tie holes, honeycombs and air voids, rock pockets, and any visible joints.

D. Repair of surface defects shall result in a fair concrete surface with uniform color and free from shrinkage cracks.

E. Clean all exposed concrete surfaces and adjoining work stained by leakage of concrete.

F. Rough-Form Finish

1. Immediately after stripping forms and before concrete has changed color, carefully remove all fins and projections.

2. Promptly fill holes left by tie cones and defects as specified in Section 03300, Cast-in-Place Concrete.

G. Rubbed Finish

1. Immediately upon stripping forms and before concrete has changed color, carefully remove all fins. While the wall is still damp, apply a thin coat of medium consistency neat cement slurry by means of a stiff bristle brush to provide a bonding coat within all pits, air holes, or blemishes in the parent concrete. Avoid coating large areas with the slurry at one time.

2. Before the slurry has dried or changed color, apply a dry (almost crumbly) grout proportioned by volume and consisting of 1-part cement to 1-1/2-parts of clean masonry sand having a fineness modulus of approximately 2.3 and complying with the gradation requirements of ASTM C33 for such a material. Grout shall be uniformly applied by means of damp pads of coarse burlap approximately 6-inch square used as a float. Scrub grout into the pits and air holes to provide a dense mortar in all imperfections.

3. Allow the mortar to partially harden for 1 to 2 hours depending upon the weather. If the air is hot and dry, keep the wall damp during this period using a fine, fog spray. When the grout has hardened sufficiently so it can be scraped from the surface with the edge of a steel trowel without damaging the grout in the small pits or holes, cut off all that can be removed with a trowel. (Note: Grout allowed to remain on the wall too long will harden and will be difficult to remove.)

4. Allow the surface to dry thoroughly and rub it vigorously with clean dry burlap to completely remove any dried grout. No visible film of grout shall remain after this rubbing. The entire cleaning operation for any area must be completed the day it is started. Do not leave grout on surfaces overnight. Allow sufficient time for grout to dry after it has been cut off with the trowel so it can be wiped off clean with the burlap.

5. On the day following the repair of pits, air holes, and blemishes, the walls shall again be wiped off clean with dry, used pieces of burlap containing old, hardened mortar, which will act as a mild abrasive. After this treatment, there shall be no built-up film remaining on the parent surface. If, however, such a film is present, a fine abrasive stone shall be used to remove all such material without breaking through the surface film of the original concrete. Such scrubbing shall be light and sufficient only to remove excess material without changing the texture of the concrete.

6. A thorough wash-down with stiff bristle brushes shall follow the final bagging or stoning operation. No extraneous materials shall remain on the surface of the wall. The wall shall be sprayed with a fine spray periodically to maintain a continually damp condition for at least three (3) days after the application of the repair grout.

7. Prepare a sample area where the texture and color of the final surface will be established as the job standard. Sample area shall be a minimum 4-foot high by 8-foot wide as directed by Engineer on a portion of new wall construction for which will be exposed in the final Work. Final accepted sample shall remain exposed to serve as the job standard for Rubbed Finish.

H. Abrasive Blast Finish

1. Coordinate with rubbed finish application. Do not begin until rubbed finish operation is complete or before concrete has reached minimum seven-day strength. The rubbed finish application may be deleted by the Engineer if the unfinished concrete surface is of superior quality. Apply the abrasive blast finish only where indicated in schedule of finishes.

2. Prepare a sample area of minimum 4-foot high by 16-foot-wide blast finish as directed by Engineer on a portion of new wall construction which will not be exposed in the final Work. Sample area shall contain a variety of finishes obtained with different nozzles, nozzle pressure, grit materials, and blasting techniques for selection by Engineer. Final accepted sample shall remain exposed until completion of all blast finish operations.

3. Blast finish operation shall meet all regulatory agency requirements. Blast finish contractor shall be responsible for obtaining all required permits and/or licenses.

4. Perform abrasive blast finishing in as continuous an operation as possible, utilizing the same work crew to maintain continuity of finish on each surface or area of work. Maintain patterns or variances in depths of blast as present on the accepted sample.

5. Upon completion of the blast finish operation, thoroughly flush finished surfaces with potable water to remove residual dust and grit. Allow air to dry until curing of concrete is complete.

3.02 FLOORS AND SLABS

A. Floated Finish

1. Machine Floating

a. Screed floors and slabs with straightedges to the established grades shown on the Drawings

b. When the concrete has hardened sufficiently to support the weight of a power float without it digging into or disrupting the level surface, thoroughly float the surface with a heavy revolving disc type power compacting machine capable of providing a 200-pound compaction force distributed over a 24-inch diameter disc.

c. Start floating along walls and around columns and then move systematically across the surface leaving a matte finish.

d. Troweling machines equipped with float (shoe) blades that are slipped over the trowel blades may be used for floating. Floating with a troweling machine equipped with normal trowel blades will not be permitted. The use of any floating or troweling machine which has a water attachment for wetting the concrete surface during finishing will not be permitted.

2. Hand Floating

   a. In lieu of power floating, small areas may be compacted by hand floating. Screed the floors and slabs with straightedges to the established grades shown on the Drawings. While the concrete is still green, but sufficiently hardened to support a finisher and kneeboards with no more than 1/4-inch indentation, wood float to a true, even plane with no coarse aggregate visible. Use sufficient pressure on the wood floats to bring moisture to the surface.

3. Finishing Tolerances

   a. Finishing tolerances should be in compliance with requirements of ACI 117.

   b. Where elastomeric bearing pads are used, the finished surface upon which bearing pad is placed shall not vary more than 1/16 inch from a 10-foot straightedge placed in any direction across the area.

   c. Level floors and slabs tolerance should conform to the following applicable classification:

      1) Very Flat Tolerance: plane maximum variation of 1/8 inch in 10 feet when measured with a 10-foot straightedge places in any direction

      2) Flat Tolerance: plane maximum variation of 3/16 inch in 10 feet when measured with a 10-foot straightedge placed in any direction

      3) Straightedge Tolerance: plane maximum variation of 5/16 inch in 10 feet when measured with a 10-foot straightedge placed in any direction

   d. Failure to meet either of the above requirements shall be cause for removal, grinding, or other correction as directed by the Engineer.

B. Broomed Finish

1. Screed slabs with straightedges to the established grades indicated on the Drawings. When the concrete has stiffened sufficiently to maintain small surface indentations, draw a stiff bristle broom lightly across the surface in the direction of drainage, or, in the case of walks and stairs, perpendicular to the direction of traffic to provide a non-slip surface. The surface texture shall be uniform in appearance without patches of non-textured surface.

C. Steel Trowel Finish

1. Finish concrete as specified in paragraph 3.02.A. Then, apply troweling and consolidate by hand or power-driven steel trowel to a smooth hard even finish free from high or low spots or other defects. Troweling of concrete shall begin as soon as concrete has hardened so that water and fine material are not brought to the surface. Excess water should be allowed to evaporate or be removed with a squeegee prior to troweling. Continue troweling passes and restraighten until surface is free of trowel marks and uniform in texture and appearance. Grind smooth any surface defects that may telegraph through applied coatings or floor coverings.

D. Concrete Sealer

1. Prepare and seal surfaces indicated on the room finish schedule to receive a sealer as follows:

a. Finish concrete as specified in the preceding paragraphs and in accordance with the schedule in paragraph 3.04.

b. Newly Placed Concrete: Surface must be sound and properly finished. Surface is application-ready when it is damp but not wet and can no longer be marred by walking workmen.

c. Newly Cured Bare Concrete: Level any spots gouged out by trades. Remove all dirt, dust, droppage, oil, grease, asphalt, and foreign matter. Cleanse with caustics and detergents as required. Rinse thoroughly and allow to dry so that the surface is no more than damp, and not wet.

d. Aged Concrete: Restore surface soundness by patching, grouting filling cracks and holes, etc. Surface must also be free of any dust, dirt, and other foreign matter. Use power tools or strippers to remove any incompatible sealers or coatings. Cleanse as required, following the procedure indicated under cured concrete.

e. Methods: Apply sealer so as to form a continuous, uniform film by spray, soft-bristle push broom, long-nap roller or lambswool applicator. Ordinary garden-type sprayers, using neoprene hose, are recommended for best results.

f. Applications: For curing only, apply first coat evenly and uniformly as soon as possible after final finishing at the rate of 200 to 400 square-feet per gallon. Apply second coat when all trades are completed, and structure is ready for occupancy at the rate of 400 to 600 square-feet per gallon.

g. To meet guarantee and to seal and dustproof, two (2) coats are required. For sealing new concrete, both coats shall be applied full-strength. On aged concrete, when renovating, dustproofing and sealing, the first coat should be thinned 10 to 15 percent (10-15%) with reducer per manufacturer's directions.

3.03 APPROVAL OF FINISHES

A. All concrete surfaces, when finished, will be inspected by the Engineer.

B. Surfaces which, in the opinion of the Engineer, are unsatisfactory shall be refinished or reworked.

C. After finishing horizontal surfaces, regardless of the finishing procedure specified, the concrete shall be cured in compliance with Section 03300, Cast-In-Place Concrete, unless otherwise directed by the Engineer.

3.04 SCHEDULE OF FINISHES

A. Concrete shall be finished as specified either to remain as natural concrete to receive an additional applied finish or material under another section.

B. Concrete for the following conditions shall be finished as noted on the Drawings and as further specified herein:

1. Concrete not exposed to view and not scheduled to receive an additional applied finish or material: Rough-form finish. See paragraph 3.01.F.

2. Vertical concrete exposed to view but not receiving any additional finish: Rubbed finish. See paragraph 3.01.G.

3. Vertical concrete in liquid containment areas except where special coating is required. Rubbed finish on exposed surfaces and extending to 2 feet below normal operating water level: Rough-form finish on remainder of submerged areas. See paragraph 3.01.G and 3.01.F.

4. Interior and exterior underside of concrete exposed to view but not receiving any additional finish: Rubbed finish. See paragraph 3.01.G.

5. Interior and exterior horizontal concrete not requiring floor sealer: Floated finish. See paragraph 3.02.A.

6. Concrete for exterior walks, interior and exterior stairs: Broomed finish perpendicular to direction of traffic. See paragraph 3.02.B.

7. Concrete slabs, concrete fill, or concrete topping in contact with process liquids or are in contact with sludge: Steel trowel finish. See paragraph 3.02.C.

8. Horizontal concrete to receive floor covering or tile flooring: Floated finish. See paragraph 3.02.A.

9. Concrete to receive floor sealer. See paragraph 3.02.D.

10. Concrete to be painted or coated with cementitious coating: Rough form finish. See paragraph 3.01.F.

11. Concrete to receive special coating, including underside of slab and walls above concrete fill in sludge tank: Abrasive blast. See paragraph 3.01.H.

12. Concrete tank bottoms or floors to be covered with concrete topping or grout: Broomed finish. See paragraph 3.02.B.

END OF SECTION

THIS PAGE INTENTIONALLY LEFT BLANK

SECTION 03600

GROUT

PART 1 GENERAL

1.01 SCOPE OF WORK

A. Furnish all labor, materials, equipment, any incidentals required and install grout complete as shown in Drawings and as specified herein.

B. Furnish manufacturer or supplier certifications for all products and materials.

1.02 RELATED SECTIONS

A. Section 01450 – Field Quality Control

B. Section 03100 – Concrete Formwork

C. Section 03200 – Concrete Reinforcement

D. Section 03250 – Concrete Joints and Joint Accessories

E. Section 03300 – Cast-in-Place Concrete

F. Division 04 – Grout for Reinforced Masonry

G. Section 05500 – Miscellaneous Metal

1.03 REFERENCE STANDARDS

A. ASTM International (ASTM), latest edition:

1. ASTM C33 Standard Specification for Concrete Aggregates
2. ASTM C150 Standard Specification for Portland Cement
3. ASTM C476 Standard Specification for Grout for Masonry
4. ASTM C531 Standard Test Method for Linear Shrinkage and Coefficient of Thermal Expansion of Chemical Resistant Mortars, Grouts, Monolithic Surfacings, and Polymer Concretes
5. ASTM C827 Standard Test Method for Change in Height at Early Ages of Cylindrical Specimens from Cementitious Mixtures
6. ASTM C1019 Standard Test Method for Sampling and Testing Grout for Masonry
7. ASTM C1107 Standard Specification for Packaged Dry, Hydraulic-Cement Grout (Nonshrink)

8. ASTM D695 Standard Test Method for Compressive Properties of Rigid Plastics

B. The Masonry Society (TMS), latest edition:

1. TMS 402/602 Building Code Requirements and Specification for Masonry Structures and Companion Commentaries

1.04 DEFINITIONS

A. Non-shrink Grout: A commercially manufactured product that does not shrink in either the plastic or hardened state, is dimensionally stable in the hardened state, and bonds to a clean base plate.

1.05 SUBMITTALS

A. See Section 01300, Submittals for submittal procedures. Shop drawings, product data, materials of construction and installation details shall include the following:

1. Commercially manufactured non-shrink cementitious grout: The submittal shall include catalog cuts, technical data, storage requirements, product life, working time after mixing, temperature considerations, conformity to required ASTM Standards, and a Material Safety Data Sheet.

2. Commercially manufactured non-shrink epoxy grout: The submittal shall include catalog cuts, technical data, storage requirements, product life, working time after mixing, temperature considerations, conformity to ASTM Standards, and a Material Safety Data Sheet.

3. Cement grout: The submittal shall include the type and brand of cement, the gradation of the fine aggregate, product data on any proposed admixtures, and the proposed mix of the grout.

4. Concrete grout: The submittal shall include data as required for concrete as delineated in Section 03300, Cast-in-Place Concrete, and for fiber reinforcement as delineated in Section 03200, Concrete Reinforcement. This includes the mix design, constituent quantities per cubic-yard, and the water/cement ratio.

B. Samples

1. Samples of commercially manufactured grout products when requested by the Engineer.

2. Aggregates for use in concrete grout when requested by the Engineer.

C. Qualifications

1. Grout manufacturers shall submit documentation that they have at least 10 years' experience in the production and use of the type of grout which they propose to supply for the Work.

1.06 QUALITY ASSURANCE

A. Pre-Installation Conference

1. Well in advance of grouting, hold a pre-installation meeting to review the requirements for surface preparation, mixing, placing, and curing procedures for each product proposed for use. Parties concerned with grouting shall be notified of the meeting at least 10 days prior to its scheduled date.

B. Services of Manufacturer's Representative

1. A qualified field technician of the non-shrink grout manufacturer, specifically trained in the installation of the products, shall attend the pre-installation conference and shall be present for the initial installation of each type of non-shrink grout. Additional services shall also be provided, as required, to correct installation problems.

1.07 DELIVERY, STORAGE, AND HANDLING

A. Deliver materials to the jobsite in original, unopened packages, clearly labeled with the manufacturer's name, product identification, batch numbers, and printed instructions.

B. Store materials in full compliance with the manufacturer's recommendations. Total storage time from date of manufacture to date of installation shall be limited to six (6) months or the manufacturer's recommended storage time, whichever is less.

C. Material which becomes damp or otherwise unacceptable shall be immediately removed from the site and replaced with acceptable material at no additional expense to the Owner.

D. Non-shrink cement-based grout shall be delivered as pre-blended, pre-packaged mixes requiring only the addition of water.

E. Minimum time of grout workability shall be 30 minutes at ambient temperature.

F. Non-shrink epoxy grouts shall be delivered as pre-measured, pre-packaged, three component systems requiring only blending as directed by the manufacturer. Epoxy grout will not be used if exposed to a temperature exceeding 140°F.

G. Grout shall not contain gypsum, aluminum, or iron powder. Grout shall meet the shrinkage requirement of ASTM C883.

PART 2 PRODUCTS

2.01 GENERAL

A. The use of a manufacturer's name and product or catalog number is for the purpose of establishing the standard of quality desired.

B. Like materials shall be the products of one manufacturer or supplier in order to provide standardization of appearance.

2.02 MATERIALS

A. Non-shrink Cementitious Grout

1. Non-shrink cementitious grouts shall meet or exceed the requirements of ASTM C1107 Grades B or C. Grouts shall be Portland cement-based, contain a pre-proportioned blend of select aggregates and shrinkage compensating agents, and shall require only the addition of water. Non-shrink cementitious grouts shall not contain expansive cement or metallic particles. The grouts shall exhibit no shrinkage when tested in conformity with ASTM C827.

   a. General purpose non-shrink cementitious grout shall conform to the standards stated above and shall be SikaGrout 212 by Sika Corp.; Set Grout by Master Builders, Inc.; Gilco Construction Grout by Gifford Hill & Co.; Euco NS by The Euclid Chemical Co.; NBEC Grout by U. S. Grout Corp.; or approved equal.

   b. Flowable (Precision) non-shrink cementitious grout shall conform to the standards stated above and shall be Masterflow 928 by Master Builders, Inc.; Hi-Flow Grout by the Euclid Chemical Co.; SikaGrout 212 by Sika Corp.; Supreme Grout by Gifford Hill & Co.; Five Star Grout by U. S. Grout Corp.; or approved equal.

B. Non-shrink Epoxy Grout

1. Non-shrink epoxy-based grout shall be a pre-proportioned, three-component, 100 percent (100%) solids system consisting of epoxy resin, hardener, and blended aggregate. It shall have compressive strength of 14,000 psi in seven (7) days when tested in conformity with ASTM D695 and have a maximum thermal expansion of 30×10^{-6} when tested in conformity with ASTM C531. The grout shall be Ceilcote 648 CP by Master Builders, Inc.; Five Star Epoxy Grout by U. S. Grout Corp.; Sikadur 42 Grout-Pak by Sika Corp.; High Strength Epoxy Grout by The Euclid Chemical Co.; or approved equal.

C. Cement Grout

1. Cement grouts shall be a mixture of one part Portland cement conforming to ASTM C150 types I, II, or III and one to two parts sand conforming to ASTM C33 with sufficient water to place the grout. The water content shall be sufficient to impart workability to the grout but not to the degree that it will allow the grout to flow.

D. Water

1. Potable water, free from injurious amounts of oil, acid, alkali, organic matter, or other deleterious substances.

PART 3 EXECUTION

3.01 PREPARATION

A. Grout shall be placed over cured concrete which has attained its full design strength unless otherwise approved by the Engineer.

B. Concrete surfaces to receive grout shall be clean and sound; free of ice, frost, dirt, grease, oil, curing compounds, laitance, and paints, and free of all loose material or foreign matter which may affect the bond or performance of the grout.

C. Roughen concrete surfaces by chipping, sandblasting, or other mechanical means to ensure bond of the grout to the concrete. Remove loose or broken concrete. Irregular voids or projecting coarse aggregate need not be removed if they are sound, free of laitance, and firmly embedded into the parent concrete.

1. Air compressors used to clean surfaces with grout shall be the oil-less type or equipped with an oil trap in the air line to prevent oil from being blown onto the surface.

D. Remove all loose rust, oil or other deleterious substances from metal embedments or bottom of baseplates prior to the installation of the grout.

E. Concrete surfaces shall be washed clean and then kept moist for at least 24 hours prior to the placement of cementitious or cement grout. Saturation may be achieved by covering the concrete with saturated burlap bags, use of a soaker hose, flooding the surface, and other method acceptable to the Engineer. Upon completion of the 24-hour period, visible water shall be removed from the surface prior to grouting. The use of an adhesive bonding agent in lieu of surface saturation shall only be used when approved by the Engineer for each specific location of grout installation.

F. Epoxy-based grouts do not require the saturation of the concrete substrate. Surfaces in contact with epoxy grout shall be completely dry before grouting.

G. Construct grout or other leak-proof containment as required. Forms shall be lined or coated with release agents recommended by the grout manufacturer. Forms shall be of adequate strength, securely anchored in place and shored to resist the forces imposed by the grout and its placement.

H. Level and align the structural or equipment bearing plates in accordance with the structural requirements and the recommendations of the equipment manufacturer.

I. Equipment shall be supported during alignment and installation of grout by shims, wedges, blocks, or other approved means. The shims, wedges, and blocking devices shall be prevented from bonding to the grout by appropriate bond breaking coatings and removed after the grouting unless otherwise approved by the Engineer.

3.02 INSTALLATION – GENERAL

A. Mix, apply, and cure products in strict compliance with manufacturer's recommendations and these Specifications.

B. Have sufficient manpower and equipment available for rapid and continuous mixing and placing. Keep all necessary tools and materials ready and close at hand.

C. Maintain temperatures of the foundation plate, supporting concrete, and grout between 40°F and 90°F during grouting and for at least 24 hours thereafter or as recommended by the grout manufacturer, whichever is longer. Take precautions to minimize differential heating or cooling of baseplates and grout during the curing period.

D. Take special precautions for hot weather or cold weather grouting as recommended by the manufacturer when ambient temperatures or the temperature of the materials in contact with the grout are outside of the 60°F and 90°F range.

E. Install grout in a manner which will preserve the isolation between the elements on either side of the joint where grout is placed in the vicinity of an expansion or control joint.

F. Reflect all existing underlying expansion, control and construction joints through the grout.

3.03 INSTALLATION – CEMENT GROUTS AND NON-SHRINK CEMENTITIOUS GROUTS

A. Mix in accordance with manufacturer's recommendations. Do not add cement, sand, pea gravel or admixtures without prior approval by the Engineer.

B. Avoid mixing by hand. Mixing in a mortar mixer (with moving blades) is recommended. Pre-wet the mixer and empty excess water. Add a pre-measured amount of water for mixing, followed by the grout. Begin with the minimum amount of water recommended by the manufacturer and then add the minimum additional water required to obtain workability. Do not exceed the manufacturer's maximum recommended water content.

C. Minimize "shoulder" length (extension of grout horizontally beyond base plate). In no case shall the shoulder length of the grout be greater than the grout thickness.

D. Placements greater than 3-inches in depth shall include the addition of clean, washed pea gravel to the grout mix when approved by the manufacturer. Comply with the manufacturer's recommendations for the size and amount of aggregate to be added.

E. Place grout into the designated areas in a manner which will avoid segregation or entrapment of air. Do not vibrate grout to release air or to consolidate the material. Placement should proceed in a manner which will ensure the filling of all spaces and provide full contact between the grout and adjoining surfaces. Provide grout holes as necessary.

F. Place grout rapidly and continuously to avoid cold joints. Do not place cement grouts in layers. Do not add additional water to the mix (retemper) after the initial stiffening.

G. Just before the grout reaches its final set, cut back the grout to the substrate at a 45-degree (45°) angle from the lower edge of bearing plate unless otherwise approved by the Engineer. Finish this surface with a wood float (brush) finish.

H. Begin curing immediately after the form removal, cutback, and finishing. Keep grout moist and within its recommended placement temperature range for at least 24 hours after the placement or longer if recommended by the manufacturer. Saturate the grout surface by use of wet burlap soaker hoses, ponding or other approved means. Provide sunshades as necessary. If drying winds inhibit the ability of a given curing method to keep grout moist, erect wind breaks until wind is no longer a problem or curing is finished.

3.04 INSTALLATION – NON-SHRINK EPOXY GROUTS

A. Mix in accordance with the procedures recommended by the manufacturer. Do not vary the ratio of components or add solvent to change the consistency of the grout mix. Do not overmix. Mix full batches only to maintain proper proportions of resin, hardener and aggregate.

B. Monitor ambient weather conditions and contact the grout manufacturer for special placement procedures to be used for temperatures below 60°F or above 90°F.

C. Place grout into the designated areas in a manner which will avoid trapping air. Placement methods shall ensure the filling of all spaces and provide full contact between grout and adjoining surfaces. Provide grout holes as necessary.

D. Finish grout by puddling to cover all the aggregate and provide a smooth finish. Break bubbles and smooth surface of the grout in conformity with the manufacturer's recommendations.

E. Epoxy grouts are self-curing and do not require the application of water. Maintain the formed grout within its recommended placement temperature range for at least 24 hours after placing, or longer if recommended by the manufacturer.

3.05 SCHEDULE

A. The following list indicates where the particular types of grout are to be used:

1. General purpose non-shrink cementitious grout: Use at all locations where non-shrink grout is called for on the plans except for base plates greater in area than 3 feet wide by 3 feet long (3′ x 3′) and except for the setting of anchor rods, anchor bolts or reinforcing steel in concrete.

2. Flowable non-shrink cementitious grout: Use under all base plates greater in area than 3 feet by 3 feet (3′ x 3′). Use at all locations indicated to receive flowable non-shrink grout by the Drawings. The Contractor, at his/her option and convenience, may also substitute flowable non-shrink grout for general purpose non-shrink cementitious grout.

3. Non-shrink epoxy grout: Use for the setting of anchor rods, anchor bolts, and reinforcing steel in concrete and for all locations specifically indicated to receive epoxy grout.

4. Cement grout: Cement grout may be used for grouting if incidental base plates for structural and miscellaneous steel such as post base platforms, base plates for beams, etc. It shall not be used when non-shrink grout is specifically called for on the Drawings or for grouting of primary structural steel members such as columns and girders.

END OF SECTION

THIS PAGE INTENTIONALLY LEFT BLANK

SECTION 03740

MODIFICATION OR REPAIR OF EXISTING CONCRETE

PART 1 GENERAL

1.01 SCOPE OF WORK

A. Furnish all labor, materials, equipment required to modify or repair existing concrete as shown on the Drawings and as specified herein.

B. Work includes patching concrete, removal of anchor bolts or any embedment. Work under this section also includes bonding new concrete pours to existing/hardened concrete.

C. Work under this Section may be performed as a remedy for improperly placed or poorly placed concrete. Perform such work only after receiving written directions from the Engineer.

1.02 RELATED SECTIONS

A. Section 02316 – Structural Excavation, Backfilling and Grading

B. Section 03200 – Concrete Reinforcement

C. Section 03250 – Concrete Joints and Joint Accessories

D. Section 03300 – Cast-in-Place Concrete

E. Section 03600 – Grout

F. Section 05500 – Miscellaneous Metal

1.03 REFERENCE STANDARDS

A. ASTM International (ASTM), latest edition:

1. ASTM C109 Standard Test Method for Compressive Strength of Hydraulic Cement Mortars (Using 2-in. or [50-mm] Cube Specimens)

2. ASTM C881 Standard Specification for Epoxy-Resin-Base Bonding Systems for Concrete

3. ASTM C882 Standard Test Method for Bond Strength of Epoxy-Resin Systems Used With Concrete By Slant Shear

4. ASTM C883 Standard Test Method for Effective Shrinkage of Epoxy-Resin Systems used with Concrete (ASTM Standard Withdrawn, No Replacement)

5. ASTM D790 Standard Test Methods for Flexural Properties of Unreinforced and Reinforced Plastics and Electrical Insulating Materials

6. ASTM G109 Standard Test Method for Determining the Effects of Chemical Admixtures on Corrosion of Embedded Steel Reinforcement in Concrete Exposed to Chloride Environments

B. American Concrete Institute (ACI), latest edition:

1. ACI 301 Specifications for Concrete Construction

1.04 SUBMITTALS

A. See Section 01300, Submittals for submittal procedures. Submit shop drawings and product data showing materials of construction and details of installation for:

1. Bonding adhesives. Product data including catalog cuts, technical data, storage and handling requirements, product life, mixing and application instructions, temperature considerations, and conformity to ASTM or other standards specified. Submit Material Safety Data Sheets (MSDS) for all adhesives.

2. Patching materials. Product data including catalog cuts, technical data, storage and handling requirements, product life, mixing and application instructions, temperature considerations, and conformity to ASTM or other standards specified. Submit Material Safety Data Sheets (MSDS) for all patching materials.

B. Samples

1. Samples of adhesive capsule anchoring system if requested by the Engineer.

C. Design Data

1. Doweling adhesive: Submit manufacturer's load test data indicating bond and shear strengths for the types of reinforcement to be bonded to existing concrete.

D. Test Reports

1. Manufacturer's certified tests for adhesives, performed by an independent testing laboratory, indicating the following strength properties and the ASTM method used to determine each: Compressive strength, tensile, bond strength, modulus of elasticity, and shear strength.

2. Manufacturer's certified tests for patching materials, performed by an independent testing laboratory, indicating the following strength properties and the ASTM method used to determine each: Compressive strength, tensile strength, bond strength, modulus of elasticity, and shear strength.

E. Qualifications

1. Adhesive manufacturer: Demonstrate at least five (5) years of experience in the manufacture of products of the type to be provided. Document manufacturer's program for training and technically supporting field personnel.

2. Patching material manufacturer: Demonstrate at least five (5) years of experience in the manufacture of products of the type to be provided. Document manufacturer's program for training and technically supporting field personnel.

1.05 QUALITY ASSURANCE

A. Qualifications

1. Applicator: Firm specializing in concrete repair approved by the materials manufacturer.

2. Manufacturer: The manufacturer of the products specified shall have not less than five (5) years of documented experience in the manufacture of such products and shall have an ongoing program to provide training and technical support for the Contractor's personnel.

1.06 SYSTEM DESCRIPTION

A. Modify and repair concrete at locations shown on the Drawings and specified.

B. The Engineer may, from time to time, direct the Contractor to make additional repairs to existing concrete. Make such repairs as specified or by other methods as may be directed by the Engineer. Payment for such repairs will be in compliance with the General Conditions of these Specifications.

1.07 DELIVERY, STORAGE, AND HANDLING

A. Clearly and indelibly mark all containers with the manufacturer's name, manufacturer's product identification, manufacturer's instructions for mixing, and warnings for handling and toxicity.

B. Deliver materials in sealed containers with labels legible and intact.

C. Storage should be made in a suitable clean and dry location approved by the Engineer.

D. Store all materials in full compliance with the manufacturer's storage instructions.

E. Handle materials in a safe manner. Avoid breaking container seals.

F. Components should not be mixed until necessary preparatory work is completed and application work will start immediately.

1.08 PROJECT SITE REQUIREMENTS

A. Environmental Requirements

B. Comply fully with manufacturer's recommendations as to the environmental conditions under which the products of this Section may be placed.

PART 2 PRODUCTS

2.01 GENERAL

A. The use of a manufacturer's name and model or catalog number is for the purpose of establishing the standard of quality and general configuration desired.

B. Similar materials shall be the end products of one (1) manufacturer in order to provide standardization for appearance.

C. Materials shall comply with these Specifications and any federal, state, or local regulations.

2.02 ADHESIVES FOR BONDING PLASTIC CONCRETE TO HARDENED CONCRETE

A. Cement Slurry

1. Cement slurry shall be water and Portland cement, both as specified in 03300, Cast-in-Place Concrete mixed to a heavy paste. Cement slurry shall not contain fly ash.

B. Solvent-Free Polymer Adhesives

1. Epoxy Adhesives

a. Epoxy adhesive shall be a two-component, solvent-free, asbestos-free, moisture-insensitive epoxy resin material conforming to the requirements of ASTM C881.

b. Curing temperature requirements (Class) and viscosity (Grade) shall be determined by supplier and Contractor after project conditions have been established.

c. Material type: Type V – for load bearing applications bonding freshly mixed concrete to hardened concrete.

d. Epoxy adhesive bonding systems shall conform to the preceding requirements and shall be Sikadur series by Sika Corporation, Lyndhurst, New Jersey, or approved equal.

2.03 ADHESIVES FOR BONDING INSERTS INTO CONCRETE

A. Doweling adhesive shall be a two-component vinyl ester blend system supplied in single cartridges separating the resin from the hardener, and capable of dispensing an accurately proportioned adhesive mixture.

1. Doweling adhesive shall be HY-200 Cartridge by Hilti Corporation, Tulsa, Oklahoma; Set 3G by Simpson Strong Tie Company, Pleasanton, California; AC200+ by DeWalt, Towson, Maryland; or approved equal.

2.04 PATCHING MATERIALS

A. Repair Mortars

1. Cementitious Mortar

a. Cementitious mortar shall be a polymer-modified, Portland cement, two-component, fast setting, easy tooling patching mortar, with an integral corrosion inhibitor.

b. Cementitious mortar shall conform to the preceding requirements and shall be Sika-Top series by Sika Corporation; Masterpatch series by Master Builders Technologies; or approved equal.

PART 3 EXECUTION

3.01 GENERAL

A. Cut, repair, or otherwise modify existing concrete as indicated on the Drawings, as specified, and as may be required by Contractor's error. Work shall comply with the requirements of this Section and other requirements as noted on the Drawings.

B. No existing concrete shall be shifted, cut, removed, or otherwise altered until authorization has been received from the Engineer.

C. When removing materials, or when repairing concrete elements, take all necessary precautions and erect barriers, shoring, bracing, or other protective devices as required to prevent damage to areas beyond the limits of the work and to protect personnel.

D. Locate penetrations drilled or cored into existing concrete to avoid existing reinforcement whenever possible. Where possible, identify reinforcement locations prior to drilling and adjust the locations of holes to avoid interference. Advise Engineer of any locations where reinforcement has been cut.

E. Mechanically clean existing exposed reinforcement or concrete embedments to remove contaminants and rust before proceeding with any concrete modification or repair.

1. Where existing reinforcement is shown to be salvaged for incorporation into new or repaired construction, carefully remove the existing concrete surrounding it, and cut, bend, or lap such bars as shown on the Drawings to provide not less than 1 inch of concrete cover between such reinforcement and the exposed surface of the concrete.

2. If more than half the diameter of any reinforcement is exposed, chip out the concrete behind that reinforcement to a depth of not less than 1/2 inch in preparation for placing concrete repair materials around it.

F. Where concrete is to be repaired in the vicinity of a control, expansion, or isolation joint, make repairs so as to preserve the line of and isolation across the joint.

3.02 REMOVING CONCRETE

A. Remove designated concrete by line drilling at the limits and then chipping or jackhammering as appropriate within the areas where the concrete is to be removed. Exercise caution to ensure that surrounding equipment or concrete, and existing reinforcement to be left in place, is not damaged. Sawcutting at the limits of concrete removal will be permitted only where specifically indicated on the Drawings or approved by the Engineer.

B. At all concrete removals where joints between new and existing concrete will be exposed to view the finished work, the edge of the concrete removal shall be made using a 1-inch-deep saw cut on the exposed surface of the existing concrete. Maintain this edge undamaged during removal of adjacent concrete.

C. All saw-cut edges shall be straight, and cuts shall intersect at a right angle.

D. Where existing reinforcement is exposed by removal of concrete and would not normally be protected by new concrete placed against it, coat the exposed surface using epoxy repair mortar, with a thickness of 1/4 inch, should be applied over the entire cut surface of the existing concrete.

E. Concrete to be left in place, which is damaged by the Contractor, shall be repaired to the satisfaction of the Engineer using approved means.

3.03 BONDING OR REPAIRING CONCRETE

A. Where new concrete is to be placed against existing concrete, bonding adhesive shall be applied to the surface of the existing concrete. Install type called out on Drawings or by referring to schedule.

B. Dry, finished surfaces of repaired concrete shall match the color and texture of the adjoining concrete to the greatest extent possible.

C. Preparation of Concrete Surfaces

1. Protect surfaces beyond the limits of bonding and repairs, against damage, abrasion, or spillage.

2. Concrete surfaces to which bonding or repair materials will be applied shall be newly exposed parent concrete, free of loose and unsound materials. Prepare surfaces by mechanical abrasion unless prohibited by environmental limitations. Prepared surfaces shall be sound, with coarse aggregate exposed, and free of any deleterious materials such as laitance, curing compounds, dust, dirt, or oil. Irregular voids or surface stones need not be removed if they are sound and firmly embedded into the parent concrete. Materials resulting from surface preparation techniques shall be removed.

    a. Mechanically abrade surfaces by sandblasting, scarifying, waterblasting, or other means approved by the Engineer. Roughen the existing surface to a minimum amplitude (distance between high and low points) of 1/4 inch.

3. In areas where reinforcing steel bars are exposed, concrete shall be removed to a minimum of 1 inch around the bars. If reinforcing steel is cut through or the cross-section area of steel bars are reduced by more than 25 percent (25%) of its original dimension, the Engineer shall be notified immediately.

4. Concrete surfaces to be bonded or repaired shall be dry unless water-insensitive cementitious products are used.

    a. Evaluate moisture content of concrete by determining if moisture will collect at bond lines between old concrete and adhesives or repair materials before the latter have cured. Test by taping a 4-foot by 4-foot (4′ x 4′) polyethylene sheet to the concrete surface. If moisture collects under the sheet before bonding or repair products would cure, allow the concrete additional drying time before placing them.

5. Where plastic concrete is to be bonded to hardened concrete, surfaces shall have a moisture content not exceeding saturated surface dry condition.

6. Surface temperature of the concrete shall be within the limits recommended by the manufacturer for the particular product to be used, but in no case shall the surface temperature be below 40° F.

7. The area of concrete to be treated shall be cut to a minimum of 1/2 inch and a maximum depth that results in no damage to reinforcing steel. Existing concrete shall be chipped so that the minimum repair mortar thickness is 1/2 inch.

D. Bonding and Repairing Procedures

1. Product Preparation

    a. Condition components as recommended by the manufacturer prior to mixing.

    b. Mix components in a clean container free of harmful residue or foreign particles.

    c. Thoroughly blend components with a mechanical mixer to a uniform and homogeneous mixture. Mix small batches (up to 1 quart) using spatulas, knives, or similar implements.

2. Application of Adhesives

    a. Apply adhesive to concrete using equipment recommended by the manufacturer for the applications and products being used.

    b. Place fresh plastic concrete within contact time of adhesive as recommended by the manufacturer. If epoxy adhesive cures to extent of losing its tack before plastic concrete is in contact with adhesive, remove or slightly abrade the first coat before placing any additional coat.

    c. Consolidate freshly placed plastic concrete in accordance with ACI 301 and ensure full bonding to existing concrete. At the completion of finishing operations, cure concrete in accordance with the provisions of Section 03300, Cast-in-Place Concrete.

3. Application of Repair Mortar

   a. Apply repair mortar to concrete surface by trowel or screed. Thickness shall be maintained within the limits recommended by the manufacturer.

   b. After initial mixing of mortar, extra water should not be added to increase mortar workability.

   c. Work mortar into place and consolidate thoroughly so that all contact surfaces are wet by the mortar, and entrapped air is reduced to the level recommended by the manufacturer.

   d. Finish mortar surface to texture, color, and smoothness required for the specific application. Repair mortar shall receive a smooth, steel trowel finish.

   e. Upon completion of finishing operations, protect and allow mortar to cure in accordance with manufacturer's recommendations.

4. Cleanup

   a. Immediately remove any adhesive or repair materials applied or spilled beyond the desired area using materials designated by the adhesive manufacturer. Avoid contamination of the work area.

   b. Repair mortar shall be cured according to the repair mortar manufacturer recommendations.

5. Field Testing

   a. The Engineer will evaluate the bonding of plastic concrete to hardened concrete after the plastic concrete has cured for not less than 28 days. First evaluation will be made by sounding methods.

   b. Detection of a hollow sound in any area shall be reason to suspect inadequate bonding. When requested by the Engineer, the Contractor shall core any such areas to determine the adequacy of bond. Length of cores shall be twice the core diameter or twice the thickness of the new concrete as requested by the Engineer.

   c. Cores shall be visually observed. If the bond is adequate, costs of coring shall be borne by the Owner. If the bond is inadequate, costs of coring and any repairs ordered by the Engineer shall be borne by the Contractor.

3.04 BONDING INSERTS INTO EXISTING CONCRETE

A. Drill hole of diameter and depth recommended by the doweling adhesive manufacturer to develop the full yield strength for the dowel to be embedded. Clear dust and debris and place doweling adhesive in hole according to manufacturer's recommendations. Locate dowel in hole to provide the indicated embedment and projection. Insert the dowel slowly, tapping it into the full depth of the hole and turning it slightly to fill voids in adhesive. Do not disturb or load the dowel before adhesive cure time is complete.

B. Waterstops between existing and new concrete:

1. Refer to Section 03250, Concrete Joints and Joint Accessories, paragraph 3.01B

3.05 SCHEDULES

A. The following are specific concrete surface preparation and bonding "methods" to be used where indicated on the Drawings or specified, or where directed by the Engineer:

1. Method A – Cement slurry bond: Prepare the existing concrete surface at the connection as specified in paragraph 3.03C. Brush on to the connection surface a 1/16-inch layer of cement slurry mixed to the consistency of a heavy paste. Immediately place new plastic concrete or grout mixture against the slurry and existing concrete.

2. Method B – Adhesive bond: Prepare the existing concrete surface at the connection as specified in paragraph 3.03C. Apply epoxy adhesive to the connection surface unless another adhesive is specified on the Drawings. Place new plastic concrete while the adhesive remains tacky.

3. Method C – Embedment of dowels, bolts or threaded rods: Drill a hole of diameter and depth as required. Clean hole of loose particles and dust using compressed air. Fill hole with and butter the steel insert member to be inserted with epoxy paste so that when the steel insert is installed, the epoxy paste will fill the hole. Insert the steel member, tapping it into the full depth of the hole. Unless otherwise shown on the Drawings, deformed bars shall be drilled and set to a depth of at least 12 bar diameters and smooth bars shall be drilled and set to a depth of at least 15 bar diameters. The depth of the drilled holes shall not exceed the thickness of the member minus 3 inches. The Engineer will provide details regarding the size and spacing of the steel embeds where not noted on the Drawings.

4. Method D – Adhesive bond with embedded dowels: Combine Methods B and C.

END OF SECTION

THIS PAGE INTENTIONALLY LEFT BLANK

SECTION 03800

CONCRETE ELECTRICAL DUCT ENCASEMENT

PART 1 GENERAL

1.01 SCOPE OF WORK

A. Furnish all labor, materials, equipment, and incidentals required and place concrete encasement around underground electrical ductwork as shown on the drawings and specified herein.

1.02 RELATED SECTIONS

A. Section 02316 – Structural Excavation, Backfilling and Grading

B. Section 03200 – Concrete Reinforcement

C. Section 03250 – Concrete Joints and Joint Accessories

D. Section 03300 – Cast-in-Place Concrete

1.03 SUBMITTALS

A. See Section 01300, Submittals for submittal procedures. Submit product data and installation details per Section 03300, Cast-in-Place Concrete. Product data shall include the following:

1. Colored pigment additive
2. Plastic warning tape (when indicated on the Drawings)

PART 2 PRODUCTS

2.01 MATERIALS

A. Provide Class A concrete as specified in Section 03300, Cast-in-Place Concrete. A red ferrous oxide concrete coloring pigment additive shall be mixed into encasement concrete at a rate of 1-1/2 pounds per sack of cement.

PART 3 EXECUTION

3.01 GENERAL

A. Concrete shall be measured, mixed, and placed, and compacted as required in Section 03300, Cast-in-Place Concrete for Class A concrete and as specified below.

B. Provide not less than 4 inches of concrete between the outside of a duct and the earth. Provide not less than 2 inches of concrete between adjacent ducts.

C. All duct line concrete pours shall be continuous between manholes or handholes and between manholes or handholes and structures.

D. Where duct lines pass through concrete walls, concrete envelopes shall be extended through and finished flush with inside surfaces. Watertight construction joints of an approved type shall be provided (see Section 03250, Concrete Joints and Joint Accessories).

E. Duct lines shall be laid in trenches on mats of gravel not less than 6 inches thick and well graded.

F. Duct lines may be cast against well shaped earth trenches that are able to support the placement and consolidation of the concrete. Forms shall be used where the earth trenches cannot support the construction and placement of the concrete or where the duct lines cross exposed openings.

G. Concrete placed for duct banks shall be field tested in accordance with Section 03300, Cast-in-Place Concrete.

H. The top of the concrete duct encasement shall be screeded smooth and level.

I. The minimum soil cover for duct banks shall be 24 inches.

END OF SECTION

SECTION 04200

MASONRY

PART 1 GENERAL

1.01 SCOPE OF WORK

A. Furnish all labor, materials, equipment, and incidentals required to construct all masonry work as shown on the Drawings and as specified herein.

B. Work under this Section includes, but is not necessarily limited to, the following:

1. Unit masonry including:

a. Concrete masonry units (CMU)
b. Brick Veneer
c. Reinforced unit masonry
d. Masonry waste disposal
e. Waterproofing of exterior masonry

C. Installation of deformed steel reinforcement provided under Section 03200, Concrete Reinforcement.

D. Masonry horizontal joint reinforcement, ties, anchors, and through-wall flashing.

E. Installation in masonry of lintels; window, door, and louver frames; vent pipes; conduits; and other items furnished by other trades.

F. Grouting of masonry cells, bond beams, and lintels.

G. Patching masonry damaged during construction.

H. Provide masonry unit, mortar, and grout testing prior to installation by an independent testing laboratory in accordance with Section 01450, Field Quality Control.

1.02 RELATED SECTIONS

A. Section 01450 – Field Quality Control

B. Section 03200 – Concrete Reinforcement

C. Section 03600 – Grout

D. Section 07210 – Building Insulation

E. Section 07600 – Flashing and Sheet Metal Work

F. Section 07901 – Joint Sealants

G. Section 08410 – Aluminum Doors, Windows, and Frames

H. Section 09902 – Finish Painting

1.03 REFERENCE STANDARDS

A. The Masonry Society (TMS), latest edition:

1. TMS 402 Building Code Requirements for Masonry Structures

2. TMS 602 Specification for Masonry Structures

B. ASTM International (ASTM), latest edition:

1. ASTM A153 Standard Specification for Zinc Coating (Hot-Dip) on Iron and Steel Hardware

2. ASTM A615 Standard Specification for Deformed and Plain Carbon-Steel Bars for Concrete Reinforcement

3. ASTM C67 Standard Test Method for Sampling and Testing Brick and Structural Clay Tile

4. ASTM C90 Standard Specification for Loadbearing Concrete Masonry Units

5. ASTM C140 Standard Test Methods for Sampling and Testing Concrete Masonry Units and Related Units

6. ASTM C144 Standard Specification for Aggregate for Masonry Mortar

7. ASTM C150 Standard Specification for Portland Cement

8. ASTM C207 Standard Specification for Hydrated Lime for Masonry Purposes

9. ASTM C270 Standard Specification for Mortar for Unit Masonry

10. ASTM C331 Standard Specification for Lightweight Aggregates for Concrete Masonry Units

11. ASTM C404 Standard Specification for Aggregates for Masonry Grout

12. ASTM C476 Standard Specification for Grout for Masonry

13. ASTM C578 Standard Specification for Rigid, Cellular Polystyrene Thermal Insulation

14. ASTM C780 Standard Test Method for Preconstruction and Construction Evaluation of Mortars for Plain and Reinforced Unit Masonry

15. ASTM C1019 Standard Test Method of Sampling and Testing Grout for Masonry

16. ASTM D226 Standard Specification for Asphalt-Saturated Organic Felt Used in Roofing and Waterproofing

17. ASTM D2000 Standard Classification System for Rubber Products in Automotive Applications

C. International Building Code (IBC), latest edition:

1. International Building Code

1.04 SUBMITTALS

A. Submit shop drawings and product data, in accordance with Section 01300, Submittals, showing materials of construction and details of installation for:

1. Masonry reinforcement, including fabrication and placing drawings, details for mild steel, and prefabricated joint reinforcement. Reinforcement placing shall conform to the requirements of Section 03200, Concrete Reinforcement.

2. Cement, hydrated lime, and any mortar or grout admixtures,

3. Proposed mortar and grout proportions,

4. Material properties and test results letters for unit strength method,

5. Miscellaneous Items: joint filler and accessories.

B. Samples: Submit samples for review sufficiently in advance of installation of the materials to allow investigation and re-submittal of new samples if the original samples are found not to conform to the contract requirements. Submit samples of the following in sizes and quantities stated:

1. Concrete Masonry Units (CMU): One (1) sample of each size

2. Brick Veneer Units: One (1) sample of each size

3. Anchors and ties: Two (2) each type

4. Wall and horizontal joint reinforcement: Two (2) samples, each at least 16 inches long, of each type

5. Masonry joint material: Two (2) samples, each at least 16 inches long, of each type

C. Test Reports

1. Provide manufacturer’s certifications for sieve analysis, mechanical properties, and deleterious substance content for coarse and fine aggregate for mortar and grout in accordance with ASTM C270.

2. Provide manufacturer’s certifications for chemical analysis and physical tests for each type of cement.

3. Provide manufacturer's certifications for chemical analysis and physical tests for hydrated lime.

4. For each type of masonry unit, provide certified pre-construction test reports including compressive strength, absorption, dimensional analysis, unit weight, and moisture content in accordance with ASTM C140.

5. Mortar test results during construction.

6. Grout test results during construction in accordance with ASTM C1019.

D. Qualifications

1. Independent testing laboratory: Name, address, and qualifications. Laboratories affiliated with the Contractor or in which the Contractor or its offices have a beneficial interest are not acceptable.

E. Procedures

1. Cold weather construction procedures. Submit a description of procedures to be used.

2. Hot weather construction procedures. Submit a description of procedures to be used.

3. Review of hot and cold weather construction procedures will be for information only. The Contractor remains fully responsible for complying with the requirements of this Section, and for the adequacy of procedures employed.

1.05 QUALITY ASSURANCE

A. Testing services required to demonstrate that the materials proposed for incorporation into the work comply with the requirement of the Contract Documents shall be provided in accordance with Section 01450, Field Quality Control.

B. All field testing and inspection services to confirm that the properties of the materials actually incorporated into the work conform to these Specifications will be provided in accordance with Section 01450, Field Quality Control. Facilitate such testing and inspection as follows:

1. Advise Engineer of installation far enough in advance to allow for assignment and scheduling of testing personnel.

2. Furnish any labor necessary to assist the testing agency in obtaining and handling samples.

C. Methods of testing shall conform to ASTM or other standards as indicated. Include in reports for prisms or test specimens a description of the portion of construction represented by the specimen(s), and a summary of conditions under which the specimens were stored prior to testing.

D. Compression strength of masonry (f′m) is 1,500 psi. The Engineer has selected this compression strength based on the Unit Strength Method.

E. Confirm properties of materials used for construction and test results for compressive strength as follows.

1. Before the delivery of any masonry units or materials:

a. Submit a letter from the masonry unit supplier certifying that units conform to the reference standards specified when sampled and tested in compliance with ASTM C67 (brick and structural clay tile) or ASTM C140 (concrete masonry).

b. Submit a certification letter indicating the mortar type to be used, and laboratory test data demonstrating that the mortar has the minimum compressive strength specified when sampled and tested in accordance with ASTM C270.

c. Submit a certification letter from the grout supplier certifying that grout proportions conform to ASTM C476, and laboratory test results demonstrating that the grout has the minimum compressive strength specified when sampled and tested in accordance with ASTM C1019.

2. During construction, test the following specimens for compressive strength. Provide and test one (1) set of specimens for each 5,000 ft² of masonry wall area, but not less than one (1) set per project.

a. One (1) set of three (3) 2-inch diameter x 4-inch cylindrical mortar specimens constructed and tested in compliance with ASTM C780, Appendix A7.

b. One (1) set of three (3) grout specimens constructed and tested in compliance with ASTM C1019.

F. Mockup: Prior to installing unit masonry, construct sample wall panels to verify selections made under sample submittals and to demonstrate aesthetic effects of materials and execution. Build mockups to comply with the following requirements, using materials indicated for final unit of Work.

1. Locate mockups on site in locations indicated or, if not indicated, as directed by Engineer.

2. Build a 4-foot x 4-foot mockup of a typical brick veneer wall, showing masonry unit selections, color, and type of mortar joint.

3. Clean exposed faces of mockups with masonry cleaner indicated, or as recommended by manufacturer.

4. Notify Engineer one (1) week in advance of the dates and times when mockups will be constructed.

5. Retain and maintain mockups during construction in an undisturbed condition as a standard for judging the completed Work.

a. Acceptance for mockups is for color, texture, and blending of masonry units; relationship of mortar and sealant colors to masonry unit colors; tooling of joints; aesthetic qualities of workmanship; and other material and construction qualities specifically approved by Engineer in writing.

b. Acceptance of mockups does not constitute approval of deviations from the Contract Documents contained in mockups, unless such deviations are specifically approved by Engineer in writing.

c. When directed, demolish and remove mockups from Project site.

G. Cold and Hot Weather Construction: Masonry construction in cold and hot weather shall conform to the applicable requirements of TMS 402 and TMS 602 unless otherwise specified herein. Heat and enclosures will be the only protection method allowed for cold weather construction. No mortar additives shall be used for this purpose.

1. Cold weather construction procedures: Submit an outline of procedures to be used.

2. Hot weather construction procedures: Submit an outline of procedures to be used.

H. Construction tolerances shall be in accordance with TMS 602.

I. Erection shall conform to TMS 602, Article 3.3.

1.06 DELIVERY, STORAGE, AND HANDLING

A. All materials for the work of this section shall be delivered and handled so as to preclude damage of any nature. Store materials off the ground and protect from weather. Prevent wetting by capillary action, rain, or snow. Manufactured materials, such as cement and lime, shall be delivered and stored in their original containers, plainly marked with identification of materials and manufacturer. Materials in broken containers, or in packages showing water marks or other evidence of damage, shall not be used and shall be removed from the site.

B. All masonry shall be shipped stacked with hay or straw protection or other suitable protective device and shall be similarly protected and stacked off the ground on the site. Masonry shall be protected from the weather and staining with the use of tarpaulins or other covering approved by the Engineer.

1.07 PROJECT CONDITIONS

A. Protection of Masonry: During erection, cover tops of walls, projections, and sills with waterproof sheeting at end of each day's work. Cover partially completed masonry when construction is not in progress.

1. Extend cover a minimum of 24 inches down both sides and hold cover securely in place.

2. Where one (1) wythe of multi-wythe masonry walls is completed in advance of other wythes, secure cover a minimum of 24 inches down face next to unconstructed wythe and hold cover in place.

B. Stain Prevention: Prevent grout, mortar, and soil from staining the face of masonry to be left exposed or painted. Immediately remove grout, mortar, and soil that come in contact with such masonry.

1. Protect base of walls from rain-splashed mud and mortar splatter by coverings spread on ground and over wall surface.

2. Protect sills, ledges, and projections from mortar droppings.

3. Protect surfaces of window and door frames, as well as similar products with painted and integral finishes, from mortar droppings.

4. Turn scaffold boards near wall on edge at the end of each day to prevent rain from splashing mortar and dirt on completed masonry.

PART 2 PRODUCTS

2.01 GENERAL

A. The use of manufacturer's name and model or catalog number is for the purpose of establishing the standard of quality and general configuration desired.

B. Like materials shall be the end products of one manufacturer in order to provide standardization for appearance.

C. Materials shall conform to the standards listed herein and to any applicable state or local building code standards.

2.02 MATERIALS – MASONRY

A. Masonry Units: Concrete

1. General

a. Outside corners of interior partition shall be made with bullnose units. Provide special units required by the drawings, including solid, corner, pilaster, lintels, bullnose, and jamb units.

b. Use formed “U” shaped units for reinforced masonry lintels.

c. Similar units shall be obtained from one manufacturer to ensure even color and texture.

d. Units shall be sound and free of cracks or other defects that would interfere with the proper placing of the units or impair the strength or permanence of the construction. Minor cracks or defects incidental to the usual method of manufacture, or minor shipping resulting from customary methods of handling in shipment and delivery, shall not be deemed grounds for rejection except that no more than five percent (5%) of a shipment shall contain chips larger than 1/4-inch from any edge or corner on the faces.

e. Provide UL approved units where required for fire-rated construction where designated.

2. Hollow and solid CMU shall conform to ASTM C90, hollow, load bearing units of 8-inch by 16-inch (8" x 16") and 12-inch by 16-inch (12" x 16") nominal face size and bed dimension as shown on the Drawings. Weight classifications shall be as follows:

a. Light weight concrete with uniform texture for interior wall locations

b. Normal weight concrete units for exterior work, exterior walls, exterior walls with brick veneer, or where exposed to soil or weather

2.03 FACE BRICK

A. Brick shall meet ASTM C216, Type FBS, Grade SW, modular dimension. Color shall be selected by the Owner to match the existing structures at the project site.

2.04 REINFORCEMENT, TIES, ANCHORS

A. Deformed steel reinforcing bars shall conform to ASTM A615 and shall be as specified in Section 03200, Concrete Reinforcement.

1. Fabricate reinforcement for masonry in accordance with the provisions of Section 03200, Concrete Reinforcement, except as amended by the following paragraphs.

2. Hooks. The term "standard hook" as used herein or as shown on the Drawings for masonry reinforcement shall be as defined in the following paragraphs. Inside diameter of the bend shall not be less than that shown in Table 1 below.

a. A 180-degree (180°) bend plus an extension of at least four (4) bar diameters, but not less than 2-1/2 inches at the free end of the bar.

b. A 90-degree (90°) bend plus an extension of at least 12 bar diameters at the free end of the bar.

c. For stirrups or ties, either a 90-degree (90°) or a 135-degree (135°) bend plus an extension of at least six (6) bar diameters but not less than 2-1/2 inches at the free end of bar.

Table 1
Reinforcement Bend Diameter

Bar		Min. Inside Diameter
Stirrups & Ties:	#4 & smaller	4 diameters
Other:	#3 through #8	6 diameters
	#9 through #11	8 diameters

B. Joint reinforcement shall be welded wire units fabricated from cold-drawn steel wire with deformed continuous side rods and plain cross-rods, crimped for cavity wall construction if required, and having a width of 1-1/2 inches to 2 inches less than nominal thickness of wall or partition. Joint reinforcement shall conform to the requirements of TMS 602 and shall be prefabricated in straight lengths of not less than 10 feet with matching corner and tee units. Units shall be hot-dipped galvanized after fabrication to conform to ASTM A153, Class B-2, 1.5-oz/ft².

1. Single wythe CMU wall horizontal reinforcement shall be Hohmann & Barnard 220 Ladder Mesh, or approved equal. For exterior walls, use wire that is hot-dipped galvanized after fabrication. Refer to Drawings for CMU wall thickness.

2. Cut or interrupt joint reinforcement at control and expansion joints, unless otherwise indicated.

3. Provide continuity at corners and wall intersections by using prefabricated "L" and "T" sections. Cut and bend reinforcement units as directed by manufacturer for continuity at returns, offsets, column fireproofing, pipe enclosures, and other special conditions.

C. Dovetail anchors shall be furnished for anchorage to concrete framework, walls, or ceilings. Anchor slots shall be fabricated from 16-gauge galvanized steel and shall be furnished with polystyrene fillers. Sizes are to be coordinated with the anchors used. Provide 16 gauge corrugated galvanized steel ties manufactured for use with the anchor slots provided.

D. Masonry Straps shall be minimum 1/4-inch thick by 1-inch wide, and of the required length, fabricated from hot-dipped galvanized steel. Straps shall be similar to Heckmann Building Products No. 272, or approved equal.

E. Weld on adjustable anchors and ties shall be 1/4-inch diameter hot-dipped galvanized steel. Anchors shall be Heckmann Building Products No. 315, or approved equal. Triangular ties shall be Heckmann Building Products No. 316, or approved equal. Web ties shall be 12-inch long by a width for the wall where it is used, and shall be Heckmann Building Products No. 318, or approved equal.

F. Provide and install miscellaneous anchors and attachment members, required both for the anchorage of work of this Section and that of other trades requiring attachment to masonry, which are not specifically provided under separate Sections.

G. Veneer Anchors (exterior metal stud backup): Hohmann & Barnard DW-10, hot dipped galvanized, 12 gauge, with Vee Wall Tie, hot dipped galvanized, 1/4-inch diameter, or approved equal. Provide Textroseal 40-mil dual barrier membrane. Provide two (2) #12 stainless steel "SX" fasteners per anchor.

2.05 MORTAR AND GROUT MATERIALS

A. Cementitious materials

1. Cementitious materials for mortar and grout shall not contain epoxy resins and derivatives, phenols, asbestos fiber, or fireclays.

2. Portland cement shall conform to ASTM C150, Type II. Masonry cements, mortar cements, and plastic cement shall not be used.

3. Lime for masonry shall be hydrated lime conforming to ASTM C207, Type-S.

B. Aggregates

1. Sand shall be clean, durable, particles, free from injurious amounts of organic matter, dust, lumps, shale, alkali, or surface coatings.

   a. Sand for mortar shall conform to ASTM C144
   b. Sand and grout shall conform to ASTM C404, Size No. 2

2. Coarse aggregate for grout shall conform to ASTM C404, Size No. 8.

C. Water shall be from a potable water supply. Water shall be free from deleterious amounts of oils, acids, alkalis, or organic matter, and shall be clean and fresh.

D. Admixtures/Additives

1. Additives and admixtures to mortar or grout shall not be used unless approved by the Engineer.

2. Antifreeze Compounds. Antifreeze liquids, Chloride slats, or other such substances shall not be used in mortar or grout.

3. Air Entrainment. Air entraining substances shall not be used in mortar or grout.

2.06 MORTAR MIXES

A. Mortar for concrete and brick masonry shall be Portland cement – lime mortar providing a minimum compressive strength of 1,800 psi at 28 days. Mortar proportions shall comply with ASTM C270 except that increases in lime content may be permitted to adjust the mixture for initial rate of absorption of the masonry or for temperature if mortar strength tests are performed. Admixtures shall not be used in the mortar mix.

1. Mix mortar in accordance with the requirements of TMS 602, using a mechanically operated mixer in which the quantity of water added can be accurately and uniformly controlled. Accurately measure mortar constituents by volume.

2. The consistency of the mortar shall be adjusted to the satisfaction of the mason with water added as necessary to produce a workable mix. Mortar may be re-tempered by adding water as frequently as needed to restore the required consistency. When water is added, it shall be mixed into the mortar, not splashed over the surface.

3. Mortar, which has begun to “set” or which has not been used within two and one-half (2-1/2) hours after initial mixing water was added to the dry ingredients, shall be discarded.

B. Tuck point mortar for repairs to existing masonry shall conform to ASTM C270, Type O. Provide test data to substantiate minimum compressive strength requirements of 350 psi at 28 days.

2.07 GROUT MIXES

A. Masonry grout for use in bond beams, lintels, reinforced masonry cells, and at other locations shown on the Drawings shall conform to ASTM C476. Admixtures shall not be used without prior approval by the Engineer. Control grout materials and water content to provide adequate fluidity for placement without segregation.

B. Strength

1. Grout shall attain a minimum compressive strength of 2,000 psi at 28 days when tested in accordance with ASTM C1019.

2. Grout shall have a slump of 8 to 11 inches and shall be cohesive without segregation.

C. Mixing and Handling

1. Accurately measure all ingredients according to the proportions specified for the batch and mix in a mechanically operated batch mixer. Mix grout for at least five (5) minutes but not more than ten (10) minutes after all ingredients have been added. Add water as required to provide the desired workability.

2. Do not handle or pump grout using aluminum equipment.

3. Transit mixed grout may be used. Continually rotate transit mixed grout from the time the water is added until the grout is discharged.

4. Grout mixing drums shall be completely emptied before the succeeding batch of materials is introduced for mixing.

D. Tempering

1. The consistency of grout shall be adjusted so that it will flow into place without segregation of ingredients. Water may be added to compensate for loss.

2. Grout that has begun final "set" and becomes harsh or which has not been used within one and one-half (1½) hours after initial mixing water was added to the dry ingredients shall not be used.

2.08 EMBEDDED FLASHING MATERIALS

A. Dampproofing Fabric: Nervastral HD, 20 mil, non-reinforced elastomeric sheet as manufactured by Rubber Plastics Compound Co., Inc., or approved equal.

2.09 INSULATION

A. Extruded Polystyrene Board Insulation: Rigid, cellular, polystyrene thermal insulation with closed cells and integral high-density skin, formed by the expansion of polystyrene base resin in an extrusion process to comply with ASTM C578, Type IV; in manufacturer's standard lengths and widths; and in thicknesses indicated.

B. Adhesive: Type recommended by insulation board manufacturer for application indicated.

2.10 MASONRY CLEANERS

A. Acidic Cleaners: Manufacturer's standard-strength, general-purpose cleaner designed for removing mortar/grout stains, efflorescence, and other new construction stains from new masonry surfaces without discoloring or damaging masonry surfaces; expressly approved for intended use of manufacturer of masonry units being cleaned. Cleaner shall be compatible with the proposed waterproofing systems. Acidic cleaners shall not be used on masonry surfaces scheduled to receive paint.

2.11 MASONRY WATERPROOFING

A. Master Protect H185 for block as manufactured by Master Building Solutions, Inc.; or approved equal.

2.12 WATERPROOFING ADMIXTURE

A. Waterproofing Admixture: Hydrocide Powder as manufactured by Sonneborn Building Products.

2.13 WEEP HOLES

A. Weep Holes: Cotton sash cord in length as required to provide 2-inch exposure on exterior and 18-inch exposure in cavity.

2.14 CAVITY DRAINAGE PROTECTION

A. Cavity Drainage Protection: Mortar Net trapezoidal-shaped polyester/polyethylene mesh. Provide thickness to fill cavity width.

2.15 COMPRESSIBLE FILLER

A. Compressible Filler: Pre-molded filler strips complying with ASTM D1056, Type 2, Class A, Grade 1. Compressible up to 35 percent (35%) of width and thickness indicated, formulated for Neoprene.

2.16 BOND BREAKER STRIPS

A. Bond Breaker Strips: Asphalt – saturated, organic roofing felt complying with ASTM D226, Type I (No. 15 asphalt felt).

PART 3 EXECUTION

3.01 PREPARATION

A. Before beginning masonry construction, verify that tolerances of supporting members are within allowable limits, and that any required reinforcing dowels have been placed in accordance with the requirements of the Contract Documents.

1. Bearing surface for masonry shall be such that the thickness of the initial bed joint shall be not less than 1/4-inch nor more than 3/4-inch in thickness.

B. Before laying masonry, remove laitance, loose aggregate, or anything else which would interfere with bond between the mortar and substrate.

3.02 MASONRY INSTALLATION

A. Cold Weather Construction. When the ambient temperature or the temperature of masonry units falls below 40°F, conform to TMS 602, Article 1.8.C. Provide cold weather heating and protection for both mortar and grout.

B. Hot Weather Construction. Where the ambient temperature exceed 100°F or 90°F with a wind velocity greater than eight (8) miles per hour (mph), conform to TMS 602, Article 1.8.D.

C. Wetting Masonry Units

1. Do not wet concrete masonry units before laying unless prior approval is obtained from the Engineer.

D. Masonry units shall be laid in running bond, with full stretchers, unless otherwise indicated. Tool joints dense and neat. Placing of mortar and units shall conform to TMS 602.

E. Joints of all masonry shall be tooled in accordance with the following:

1. Wait until mortar is thumbprint hard before tooling joint. This may require as much as three (3) hours in the shade and one (1) hour in the sun in the summertime.

2. The required personnel shall be kept on the job after hours, if necessary, to properly tool joints.

3. Both vertical and horizontal joints shall be maintained uniform in spacing.

4. Joints for all types of CMU shall be 3/8-inch and concave.

F. Install all frames required to be set in masonry, set masonry tightly against frames, build in all fame anchors, and fill frames with mortar.

G. Control joints shall be installed at the intersection of masonry walls with structural concrete and elsewhere as detailed on the Drawings. The maximum length, horizontally, between vertical control joints shall be 30 feet, but joints shall be located only as directed or shown. Joints shall be equal in width to the standard mortar joint. Extended control joints through bond beams and discontinue horizontal reinforcement across joint unless otherwise shown on the Drawings.

H. All masonry slots, chases, or openings required for the proper installation, or the work of other Sections shall be constructed as indicated on the Drawings or in accordance with information furnished before the work is started at the points affected. No chase shall be cut into any wall constructed of hollow units after it is built, except as directed and approved by the Engineer.

I. Cut masonry units with motor-driven saws to provide clean, sharp, unchipped edges. Cut units as required to provide continuous pattern and to fit adjoining construction. Use full-size units without cutting, where possible. Allow units cut with water-cooled saws to dry before placing, unless wetting of units is specified. Install cut units with cut surfaces and, where possible, cut edges concealed.

J. Mix units for exposed unit masonry from several pallets or cubes as they are placed to produce uniform blend of colors and textures.

K. Surfaces shall be brushed as work progresses and maintained as clean as is practicable. Protect sills, ledges, offsets, etc. from mortar droppings. Unfinished work shall be raked back where possible and toothed only where acceptable to the Engineer. The top of partially completed work shall be covered at all times while work is not in progress. Before leaving fresh or unfinished work, walls shall be fully covered and protected against rain, wind, frost, or the elements. Covers

of waterproof paper, tarpaulins, or other means acceptable to the Engineer, shall be draped over the wall, shall extend a minimum of 2 feet down both sides, and shall be firmly held in place.

L. Build in all miscellaneous items to be set in masonry for which placement is not specifically provided under separate divisions, including reglets, lintels, ties, electrical conduits and fixtures. Cooperate with other trades whose work is to be coordinated with the work under this Section.

1. Do not embed pipes or electrical conduits in masonry unless their location has been detailed on the structural drawings. Pipes or conduits placed in unfilled cells of hollow unit masonry will not be considered as embedded. Sleeves through masonry shall not be placed closer than three (3) diameters, center to center, nor shall they be placed through reinforced courses or cells.

2. Do not place dissimilar metals in contact with each other.

3. Do not embed aluminum conduits, pipes or accessories in masonry, grout, or mortar, unless they have been coated or covered with materials which will effectively prevent chemical reactions with cement or steel.

4. Do not insert through-wall flashing or other elements which stop bond in masonry joints unless approved by the Engineer.

M. All anchorage, attachment, and bonding devices shall be set so as to prevent slippage and shall be completely covered with mortar or grout.

N. All ties and joint reinforcing for masonry shall be furnished and installed under this Section. Horizontal reinforcement shall be installed continuously in every other course of 16 inches on center vertically.

O. Bed and grout for items coming in contact with masonry where grouting is required, including, but not limited to, door bucks and frames set in masonry. Install all anchor bolts, base plates, and seats in masonry walls, and build in all items required for the completion of the building as they apply to masonry.

3.03 CONSTRUCTION TOLERANCES

A. Variation from Plumb: For vertical lines and surfaces of columns, walls, and arises, do not exceed 1/4-inch in 10 feet, nor 3/8-inch in 20 feet, nor 1/2-inch in 40 feet or more. For external corners, expansion joints, control joints, and other conspicuous lines, do not exceed 1/4-inch in 20 feet nor 12-inch in 40 feet or more. For vertical alignment of head joints, do not exceed plus or minus 1/4-inch in 10 feet, nor 1/2-inch maximum.

B. Variation from Level: For bed joints and lines of exposed lintels, sills, parapets, horizontal grooves, and other conspicuous lines, do not exceed 1/4-inch in 20 feet, nor 1/2-inch in 40 feet or more. For top surface of bearing walls, do not exceed 1/8-inch in 10 feet, nor 1/16-inch within width of a single unit.

C. Variation of Linear Building Line: For position shown in plan and related portion of columns, walls, and partitions, do not exceed 1/2-inch in 20 feet, nor 3/4-inch in 40 feet or more.

D. Variation in Cross-Sectional Dimensions: For columns and thickness of walls, from dimensions shown, do not exceed minus 1/4-inch nor plus 1/2-inch.

E. Variation in Mortar-Joint Thickness: Do not vary from bed-joint thickness indicated by more than plus or minus 1/8-inch, with a maximum thickness limited to 1/2-inch. Do not vary bed-joint thickness from bed-joint thickness of adjacent course by more than 1/8-inch. Do not vary from head-joint thickness indicated by more than plus or minus 1/8-inch. Do not vary head-joint thickness from adjacent head-joint thickness by more than 1/8-inch. Do not vary from collar-joint thickness indicated by more than minus 1/4-inch or plus 3/8-inch.

3.04 LAYING MASONRY WALLS

A. Lay out walls in advance for accurate spacing of surface bond patterns with uniform joint widths and for accurate locating of openings, movement-type joints, returns, and offsets. Avoid the use of less-than-half-size units at corners, jambs, and where possible at other locations.

B. Lay walls to comply with specified construction tolerances, with courses accurately spaced and coordinated with other construction.

C. Bond Pattern for Exposed Masonry: Lay exposed masonry in the following bond pattern; do not use units with less than nominal 4-inch horizontal face dimensions at corners or jambs. Running bond.

D. Lay concealed masonry with all units in a wythe in running bond or bonded by lapping not less than 2 inches. Bond and interlock each course of each wythe at corners. Do not use units with less than nominal 4-inch horizontal face dimensions at corners or jambs.

E. Stopping and Resuming Work: In each course, rack back 1/2-unit length for one-half running bond or 1/3-unit length for one-third running bond; do not tooth. Clean exposed surfaces of set masonry, wet clay masonry units lightly if required, and remove loose masonry units and mortar prior to laying fresh masonry.

F. Built-in Work: As construction progresses, build-in items specified under this and other Sections of the Specifications. Fill in solidly with masonry around built-in items.

G. Fill space between hollow metal frames and masonry solidly with mortar, unless otherwise indicated. At exterior frames, insert extruded polystyrene board insulation around perimeter of frame in thickness indicated, but not less than 3/4-inch to act as a thermal break between frame and masonry.

H. Where built-in items are to be embedded in cores of hollow masonry units, place a layer of metal lath in the joint below and rod mortar or grout into core.

I. Fill cores in hollow concrete masonry units with grout 24-inch under bearing plates, beams, lintels, posts, and similar items, unless otherwise indicated.

J. Build non-load-bearing interior partitions to height shown by partition schedule.

3.05 MORTAR BEDDING AND JOINTING

A. Lay hollow concrete mortar as follows:

1. With full mortar coverage on horizontal and vertical face shells.

2. Bed webs in mortar in starting course on footings and in all courses of piers, columns, and pilasters, and where adjacent to cells or cavities to be filled with grout.

3. For starting course on footings where cells are not grouted, spread out full mortar bed, including areas under cells.

4. Maintain joint widths indicated, except for minor variations required to maintain bond alignment. If not indicated, lay walls with 3/8-inch joints.

B. Lay veneer block as follows:

1. Lay units with full head joints, unless otherwise indicated. Provide bed joints with full mortar coverage on face shells and webs.

2. Maintain joint widths indicated, except for minor variations required to maintain bond alignment. If not indicated, lay walls with 1/4-inch to 3/8-inch joints.

C. Tool exposed joints with a concave-joint, using a 20-inch-long sled runner for horizontal joints in veneer block and for all joints in concrete masonry, unless otherwise indicated.

D. Cut joints flush for masonry walls that are to receive plaster or other direct-applied finishes (other than paint), unless otherwise indicated.

3.06 STRUCTURAL BONDING OF MULTIWYTHE MASONRY

A. Use individual metal ties installed in horizontal joints to bond wythes together. Provide ties as shown, but not less than one (1) metal tie per 4 ft^2 of wall area, spaced not to exceed 24 inches on center, horizontally and vertically. Stagger ties in alternate courses. Provide additional ties within 12 inches of openings and space not more than 36 inches apart around perimeter of openings. At intersecting and abutting walls, provide ties at no more than 24 inches on center vertical.

B. Corners: Provide interlocking masonry unit bond in each course at corners, unless otherwise shown.

1. Provide continuity with horizontal-joint reinforcement at corners by using prefabricated “L” units in addition to masonry bonding.

C. Intersecting and Abutting Walls: Unless vertical expansion or control joints are shown at juncture, provide same type of bonding specified for structural bonding between wythes and space as follows:

1. Provide individual metal ties not more than 16 inches on center.

2. Provide continuity with horizontal-joint reinforcement by using prefabricated “T” units.

3. Provide rigid metal anchors not more than 24 inches on center. If used with hollow masonry units, embed ends in mortar-filled cores.

3.07 CAVITIES

A. Keep cavities clean of mortar droppings and other materials during construction. Strike joints facing cavities flush.

1. Use wood strips temporarily placed in cavity to collect mortar droppings. As work progresses, remove strips, clean off mortar droppings, and replace in cavity.

B. Tie exterior wythe to back-up with individual metal ties. Stagger alternate courses.

3.08 ANCHORING MASONRY TO STRUCTURAL MEMBERS

A. Anchor masonry to structural members where masonry abuts or faces structural members to comply with the following:

1. Provide an open space not less than 1-inch in width between masonry and structural member, unless otherwise indicated. Keep open space free of mortar or other rigid materials.

2. Anchor masonry to structural members with flexible anchors embedded in masonry joints and attached to structure.

3. Space anchors as indicated, but not more than 24 inches on center vertically and 36 inches on center horizontally.

3.09 ANCHORING MASONRY VENEERS

A. Anchor masonry veneers to metal studs with masonry-veneer anchors to comply with the following requirements:

1. Fasten each anchor section through sheathing to metal studs with two (2) metal fasteners of type indicated.

2. Embed tie section in masonry joints. Provide not less than 2-inch air space between back of masonry veneer and face of sheathing.

3. Locate anchor section relative to course where tie section is embedded to allow maximum vertical differential movement of tie up and down.

3.10 CONTROL AND EXPANSION JOINTS

A. General: Install control and expansion joints in masonry where indicated. Build-in related items as the masonry progresses. Do not form a continuous span through movement joints unless provisions are made to prevent in-plane restraint of wall or partition movement.

B. Form control joints in concrete masonry as follows:

1. Install Hohmann & Barnard Slip-Set Stabilizer, or approved equal, at 16 inches on center. Fill adjacent void in block with grout and vertical reinforcement. Discontinue wall reinforcing at the joint. Install backer rod and sealant in the vertical joint. Keep head joints at control joint free from mortar.

C. Form expansion joints in veneer block as follows:

1. Build-in joint fillers where indicated, but not less than 3/8-inch for installation of sealant specified in Section 07901, Joint Sealants. Building expansion joints shall have metal expansion joint covers where shown.

3.11 LINTELS

A. Install steel lintels where indicated. Steel lintels shall be hot dipped galvanized and painted.

B. Provide masonry lintels where shown and where openings of more than 24 inches for block size units are shown without structural steel or other supporting lintels.

1. Provide prefabricated or built-in place masonry lintels. Use specially formed bond beam units with reinforcement bars placed as indicated and filled with coarse grout. Cure precast lintels before handling and installing. Temporarily support built-in-place lintels until cured.

C. For steel lintels, provide minimum bearing of 8 inches at each jamb, unless otherwise indicated. For masonry lintels, provide minimum bearing of 2'-0" at each jamb, unless otherwise indicated.

3.12 FLASHING, WEEP HOLES, AND VENTS

A. General: Install embedded flashing and weep holes in masonry at shelf angles, lintels, ledges, other obstructions to the downward flow of water in the wall, and where indicated.

B. Prepare masonry surfaces so they are smooth and free from projections that could puncture flashing. Place through-wall flashing on sloping bed of mortar and cover with mortar. Seal penetrations in flashing with adhesive, sealant, or tape as recommended by flashing manufacturer before covering with mortar.

C. Install flashing as follows:

1. At composite masonry walls, including cavity walls, extend flashing from exterior face of outer wythe of masonry, through the outer wythe, turned up a minimum of 4-inch, and through the inner wythe to within 1/2-inch of the interior face of the wall in exposed masonry. Where interior surface of inner wythe is concealed by furring, carry flashing completely through the inner wythe and turn up approximately 2 inches, unless otherwise indicated.

2. At masonry-veneer walls, extend flashing from exterior face of veneer, through the veneer, up face of sheathing at least 8 inches, and behind air-infiltration barrier/building paper.

3. At lintels and shelf angles, extend flashing a minimum of 4 inches into masonry at each end. At heads and sills, extend flashing 4 inches at ends and turn up not less than 2 inches to form a pan.

D. Install weep holes in the head joints in exterior wythes of the first course of masonry immediately above embedded flashing and as follows:

1. Form weep holes with product specified in Part 2 of this Section.

2. Space weep holes 24 inches on center.

3. In cavities, place pea gravel to a height equal to height of first course, but not less than 2 inches, immediately above top of flashing embedded in the wall, as masonry construction progresses, to splatter mortar droppings and to maintain drainage.

3.13 BONDING, ANCHORS, AND TIES

A. Unless otherwise shown, corners and intersections of load-bearing masonry walls shall be bonded in each course with a true masonry bond, except that when necessarily erected separately, they shall be anchored with rigid steel anchors spaced not more than 2 feet apart vertically.

B. Intersections of non-load-bearing partitions with other walls or partitions shall be tied with corrugated metal anchors at vertical intervals of not more than 16 inches, or with masonry bonding in alternate courses.

3.14 REINFORCED MASONRY

C. Provide reinforcement of the type, size, and spacing and at locations as indicated on the Drawings and specified herein.

D. Concrete masonry unit walls shall be laid in such a manner as to preserve the alignment and unobstructed vertical continuity of cells. Cross webs adjacent to vertical cores that are to be filled with grout shall be fully bedded with mortar, to prevent grout leakage. Mortar fins protruding from joints shall be removed before grout is placed. The minimum clear dimensions or vertical cores to be grouted shall be 2-inch by 3-inch (2" x 3").

E. Reinforcement shall be free of dirt, oil and other materials that will adversely affect bond, and shall be straight except where bends or hooks are detailed on the plans. Reinforcement which, in the opinion of the Engineer, is bent or otherwise damaged so as to affect its structural capacity shall not be incorporated into the Work.

F. Bond beams and horizontal joint reinforcing shall be continuous with lapped splices as specified except at vertical control joints, or at other locations noted on the Drawings.

G. Reinforcing Around Openings

1. Unless otherwise shown on the Drawings, at openings in masonry greater than or equal to 16 inches in any direction, provide a minimum of one (1) #4 bar in grouted cells or bond/lintel beams on all sides of the opening. Bars shall extend at least 48 bar diameters past the opening on each side.

2. See lintel schedules and miscellaneous details on the Drawings for additional requirements.

H. Reinforcing Details

1. Support and fasten masonry reinforcement to prevent displacement beyond the tolerances noted herein.

2. Install horizontal wire joint reinforcement in the second bed joint above the support for masonry and thereafter at 16-inch vertical intervals and at other locations as detailed on the Drawings.

a. Wire joint reinforcement shall be continuous throughout the wall and around corners except that it shall not pass through vertical masonry control joints unless so indicated on the Drawings.

b. Lap side rods at least 12 inches at splices.

c. Embed joint reinforcement in masonry bed joints with not less than 5/8-inch mortar coverage.

3. Position and accurately space reinforcement in units as shown on the Drawings. Maintain a clear distance between reinforcement and any masonry surface or adjacent bar of not less than 1/4-inch for fine grout or 1/2-inch for coarse grout.

4. Tolerances for placing reinforcement shall be as shown in Table 2 below, where "d" equals distance from centerline of steel to the compression face of masonry.

a. If it becomes necessary to move reinforcement to avoid interferences with other reinforcement, conduits, or embeds, bars shall not be moved beyond their specified tolerances nor more than one diameter without prior approval by the Engineer.

Table 2
Reinforcement Placement in Walls, Beams, Lintels, and Bond Beams

"d" (inches)	Placement Tolerance (inches)
$d \leq 8$	± 1/2
$8 < d \leq 24$	± 1
$d > 24$	± 1 1/4

5. Splice-deformed reinforcing steel at least 40 bar diameters unless otherwise noted on the Drawings. When adjacent lapped bars are spaced 3 inches apart or less, increase the lap length to 52 bar diameters, or stagger the laps at least 24 bar diameters with no increase in lap length.

6. Clear spacing between vertical bars in columns or pilasters shall be not less than 2-1/2 times the bar diameter nor 1½-inch. Stagger adjacent splices vertically.

7. Completely embed all reinforcing bars in mortar or grout with minimum cover (including the masonry unit) as follows:

a. Interior exposure: 1½-inch
b. Exposed to soil or weather: 2-inch

8. Provide masonry dowels cast into the supporting concrete at all corners of the structure, in the first adjacent cell in each direction from the corner, at cells requiring vertical reinforcement, and elsewhere as shown on the Drawings.

3.15 GROUTING

A. General

1. Walls shall be grouted at reinforced cells only unless otherwise indicated on the Drawings. Cells containing anchors or inserts shall be fully grouted for at least 8 inches each way past the embed.

2. Prior to grouting, the grout space shall be clean and free of mortar projections greater than 1/2-inch, mortar droppings, or other foreign materials.

3. Reinforcement shall be in place and adequately supported before commencing grouting operations. Reinforcement shall be clean and free of mortar droppings or other debris. Notify the Engineer at least 24 hours prior to any grouting operations so that reinforcement placement, support and laps may be observed before grouting. Accurately set embedded bolts with templates and hold in place to prevent movement. Provide minimum 1-inch grout space between any bolt and an adjacent masonry surface.

4. Install barriers so that spaces designated for grouting will be filled with grout and the grout will be confined to those specific spaces. Place vertical barriers consisting of masonry units, or mortar in hollow bond beam units and grouted collar joint at maximum intervals of 30 feet to limit the horizontal flow of grout. The grouting of any section of wall between barriers shall be completed in one day with no interruptions greater than one (1) hour.

5. Control grout materials and water content during grouting to provide adequate fluidity for placement without segregation. Place grout within one and one-half (1-1/2) hours after the introduction of water into the mix and prior to initial set.

6. Solidly fill with grout all reinforced cells and other cells as indicated

7. on the Drawings. Place grout in a continuous pour to its maximum placement height using lifts of 5 feet or less and consolidating the grout after each lift.

8. Consolidate grout by mechanical vibration before loss of plasticity, in a manner which will solidly fill the grout space and minimize voids due to absorption of water into the masonry. Reconsolidate grout by mechanical vibration after initial water loss and settlement has occurred. Consolidation should normally occur when the plasticity of the grout approaches that of stiff mortar (when a touch leaves an indentation).

9. Complete grouting of beams over openings in one continuous operation. Provide approved material to confine the grout in a beam where grouting occurs over ungrouted cells below. Material used for confinement shall not inhibit bond between masonry units and mortar.

10. Use extreme care to prevent any grout or mortar from staining the face of masonry to be left exposed or unpainted. If any grout or mortar does contact the face of such masonry, it shall be removed immediately. Protect all sills, ledges, offsets, etc. from grout droppings.

11. Limitations on grout type (fine or coarse), and height of grout pours shall be as shown in Table 3 below. Units may be laid to the maximum height of the grout pour before grouting

unless otherwise noted on the Drawings or specified. Where this table or notes on the Drawings indicate that walls are to be grouted at intervals less than their final height, use "low-lift" grouting procedures. Where walls are grouted to their final height in one pour, use "high-lift" grouting procedures.

Table 3
Grout and Pour Height Limitations

Grout Type	Grout Pour Maximum Height[1] (feet)	Least Clear Dimension[2]	
		Width of Grout Space[3] (inches)	Cell Dimensions[4] (Inch x Inch)
Fine	1	3/4	1-1/2 x 2
	5	2	2 x 3
	12	1/2	2-1/2 x 3
	24	3	3 x 3
Coarse	1	1-1/2	1-1/2 x 3
	5	2	2-1/2 x 3
	12	2-1/2	3 x 3
	24	3	3 x 4

[1] Maximum pour heights may be used, when approved by the Engineer, when it can be demonstrated that the grout spaces can be properly filled.
[2] The clear dimension is the cell width less mortar projections, or the grout space width less the sum of mortar projections plus the width of any horizontal reinforcement inside the space.
[3] For grout spaces between masonry wythes.
[4] For grouted cells in hollow unit masonry.

B. Low – Lift Grouting Procedures

1. Between grout pours in vertical cells, form a horizontal construction joint "key" in walls by stopping all wythes at the same elevation, and stopping the grout lift a minimum of 1½-inch below the mortar joint, except at the top of a wall. Consolidate the grout and then continue the pour. For horizontal bond beams, grout cells below the bond beam and consolidate, then grout the bond beam itself stopping the grout pour 1/2-inch below the top of the masonry. At the finished course of both walls and bond beams, bring the last pour flush with the top of the masonry during initial placing and again after consolidation.

C. High-Lift Grouting Procedures

1. Do not erect masonry to a height of more than 80 times the minimum clear cell or grout space dimension nor higher than 30 feet before grouting unless approval is obtained in writing from the Engineer.

2. In multiple-wythe masonry, tie wythes together with metal ties or horizontal joint reinforcement adequate to resist the lateral from pressures produced by the grout.

3. Where grout pour exceeds 5 feet in height, provide clean-outs in the bottom course of masonry. Clean-out openings shall be not less than 12 in^2 in area, and the least dimension of any opening shall not be less than 3 inches. In partially grouted reinforced masonry, provide clean-out openings at each vertical bar. In solid grouted masonry, space clean-outs at each vertical bar, but not more than 32 inches on center.

4. Before grouting, clean cells and collar joints and close and seal clean-out openings. Brace closures to resist grout pressure. Pour grout at a rate which will minimize the potential for "blowouts" at the closed clean-out openings, but rapidly enough to allow consolidation before loss of plasticity.

3.16 REPAIR, POINTING, AND FINAL CLEANING

D. Exposed masonry shall be protected against staining by wall coverings, and excess mortar shall be wiped off the surface as the work progresses to reduce need for cleaning at completion of the work.

E. Where ordered, remove masonry units which are loose, chipped, broken, stained or otherwise damages, and units which do not match adjoining units and install new units in fresh mortar or grout, pointed to eliminate, as approved by the Engineer, evidence of replacement.

F. Pointing

1. During the tooling of joints, enlarge any voids or holes, and completely fill with mortar matching the color of the surrounding work as approved by the Engineer and tool to match. Point-up all joints at corners, openings and adjacent work to provide a neat, uniform appearance and properly prepare joints for application of sealants where required.

2. Before final cleaning, repoint all unsatisfactory joints as specified above and as required by the Engineer.

G. Final Cleaning of Masonry

1. After mortar has thoroughly set and cured (three (3) weeks minimum during the summer, five (5) weeks minimum during the winter), a sample wall area (approximately 20 ft^2), shall be cleaned, with an approved commercial masonry cleaner, diluted and mixed with potable water as recommended by the manufacturer and as approved. The sample area may be the sample wall panel specified above or an area in the finish work as approved by the Engineer.

2. The Engineer's acceptance of sample cleaning shall be obtained before proceeding to clean the remainder of masonry work. A minimum of one (1) week of dry weather is required to evaluate effectiveness of cleaning and effect on masonry and mortar. Upon acceptance by the Engineer, all masonry shall be cleaned by the same method to the satisfaction of the Engineer.

H. Acid solutions shall not be used for cleaning any CMU scheduled to receive paint. Upon completion of the work, all surfaces of CMU shall be washed with soap powder and warm water, applied with a scrubbing brush, and then rinsed thoroughly with clear water. Other cleaning methods may be ordered to obtain required appearance.

I. Masonry areas not satisfactorily cleanable will be ordered to be replaced at no extra cost to the Owner.

3.17 MASONRY WASTE DISPOSAL

A. Masonry Waste: Remove masonry waste from the site.

3.18 ABOVE GRADE MASONRY WATERPROOFING

B. Surface preparation: Surfaces must be thoroughly dry, clean and free from oil, grease, tar, dirt or loose mortar. Seams, joints and cracks shall be filled with appropriate sealant material.

C. Apply water repellent to a test patch of masonry work prior to building application. Do not proceed if noticeable staining occurs.

D. All exterior masonry shall be treated. Surfaces shall be completely clean and dry. Prepare waterproofing in strict accordance with manufacturer's instructions and applications rate. Make a field test for application rate if recommended by manufacturer.

E. Warranty: Upon completion and acceptance of the work the following written warranty shall be provided to the Owner prior to final payment:

1. Installer's 2-year guarantee against defects, water penetration, efflorescence, discoloring, etc.

2. Manufacturers 5-year labor and material warranty for moisture penetration.

END OF SECTION

SECTION 05120

STRUCTURAL STEEL

PART 1 GENERAL

1.01 SCOPE OF WORK

A. Furnish all labor and materials required and install structural steel including bearing plates, columns, beams, and miscellaneous shapes and plates required to erect the structural framing as shown on the Drawings, and as specified herein.

B. Furnish and install nuts and washers for anchor bolts. The Contractor is responsible for coordinating all pertinent trades in the installation of anchor bolts in concrete for structural steel framing, etc., using templates or other means as necessary. Additional requirements for installing anchor bolts are included in Division 3.

1.02 RELATED SECTIONS

A. Division 03 – Concrete

B. Section 03600 – Grout

C. Section 05513 - Galvanizing

1.03 REFERENCE STANDARDS

A. American Institute of Steel Construction (AISC), latest edition:

1. AISC Steel Construction Manual
2. AISC 303 Code of Standard Practice for Steel Buildings and Bridges
3. AISC 360 Specification for Structural Steel Buildings

B. ASTM International (ASTM), latest edition:

1. ASTM A36 Standard Specification for Carbon Structural Steel
2. ASTM A53 Standard Specification for Pipe, Steel, Black and Hot-Dipped, Zinc Coated, Welded and Seamless
3. ASTM A123 Standard Specification for Zinc (Hot-Dip Galvanized) Coatings on Iron and Steel Products
4. ASTM A153 Standard Specification for Zinc Coating (Hot-Dip) on Iron and Steel Hardware
5. ASTM A307 Standard Specification for Carbon Steel Bolts, Studs, and Threaded Rod 60 000 PSI Tensile Strength

6. ASTM A325 Standard Specification for Structural Bolts, Steel, Heat Treated, 120/105 ksi Minimum Tensile Strength (WITHDRAWN 2016) (Replaced by F3125)

7. ASTM A490 Standard Specification for Structural Bolts, Alloy Steel, Heat Treated, 150 ksi Minimum Tensile Strength (WITHDRAWN 2016) (Replaced by F3125)

8. ASTM A500 Standard Specification for Cold-Formed Welded and Seamless Carbon Steel Structural Tubing in Rounds and Shapes

9. ASTM A501 Standard Specification for Hot-Formed Welded and Seamless Carbon Steel Structural Tubing

10. ASTM A992 Standard Specification for Structural Steel Shapes

11. ASTM F1554 Standard Specification for Anchor Bolts, Steel, 36, 55, and 105-ksi Yield Strength

12. ASTM F3125 Standard Specification for High Strength Structural Bolts and Assemblies, Steel and Alloy Steel, Heat Treated, Inch Dimensions 120 ksi and 150 ksi Minimum Tensile Strength, and Metric Dimensions 830 MPa and 1040 MPa Minimum Tensile Strength

C. American Welding Society (AWS), latest edition:

1. AWS A5.1 Specification for Carbon Steel Electrodes for Shielded Metal Arc Welding

2. AWS D1.1 Structural Welding – Steel

D. Research Council on Structural Connections (RCSC), latest edition:

1. Specification for Structural Joints using High Strength Bolts

1.04 SYSTEM DESCRIPTION

A. Beam Connections not detailed on the Drawings shall be bolted framed beam connections as shown in Part 9 of the AISC Steel Construction Manual.

B. Bolted shear connections shall be bearing-type connections unless otherwise shown.

1.05 DESIGN REQUIREMENTS

A. Design Criteria for Stairs, Landings, and Elevated Platforms.

1. Live loads: 100 lb/ft^2 uniform
   250 lb concentrated

2. Allowable deflection: Span/360 live load only
   Span/240 dead plus live load
   1/4-inch maximum

3. Provide bracing against side sway in all directions. Coordinate with Drawings and equipment manufacturer to identify locations that cannot be obstructed for access or maintenance reasons.

1.06 SUBMITTALS

A. See Section 01300, Submittals for submittal procedures.

B. Submit erection drawings, detailed shop drawings, schedules and data for all structural steel. Approval will be for strength only and shall not relieve the Contractor of responsibility for ensuring proper fit of members, submittal of connections not detailed on the Drawings, or for supplying all material required by the Contract Documents. Mark numbers painted on the shop assembled pieces of steel shall be the same mark numbers used on the detailed shop and erection drawings.

C. Submit certified mill test reports for the structural steel and bolting materials.

D. Submit certifications that welders are qualified, in accordance with AWS D1.1, for the shop and field welding procedures to be used.

E. Submit structural calculations stamped by an engineer registered in the State of Arkansas. Calculations shall include, but not be limited to, a description of the structural design method and codes used in establishing the allowable stresses and safety factors applied in design. Review of the structural calculations by the Engineer shall be for conformance with the design criteria only and shall in no way relieve the structural steel fabricator of design responsibility.

F. Submit coating thicknesses for all members and hardware in accordance with the ASTM Standards.

1.07 QUALITY ASSURANCE

A. Structural steel shall be in accordance with the AISC Specification for Structural Steel Buildings and the Code of Standard Practice for Steel Buildings and Bridges unless otherwise specified herein.

B. Welding shall be in accordance with AWS D.1.1 unless otherwise specified herein or in the AISC Specifications.

1.08 DELIVERY, STORAGE, AND HANDLING

A. Deliver materials promptly so as to cause no delay with other parts of the work.

B. Store materials on skids and not on the ground. Pile and block materials so that they will not become bent or otherwise damaged.

C. Handle materials with cranes or derricks as far as practicable. Do not dump steel off delivery or erection vehicles nor handle in any other manner likely to cause damage.

1.09 PROJECT SITE CONDITIONS

A. Coordinate the work of this Section with the work of other Sections. Verify at the site both the dimensions and work of other trades that adjoin items of work in this Section before commencement of items specified herein.

B. Field measurements shall be taken at the site to verify or supplement indicated dimensions and to ensure proper coordination of all other construction items.

PART 2 PRODUCTS

2.01 MATERIALS

A. Structural Shapes: ASTM A992

B. Plates, rods, and bars unless otherwise noted: ASTM A36

C. Structural tube: ASTM A500, Grade B or ASTM A501

D. Structural pipe: ASTM A53, Type S, Grade B

E. Welding electrodes: AWS A5.1 E70XX

F. High strength steel bolts, nuts, and washers: ASTM F3125

G. Anchor bolts: ASTM F1554, Grade 36

H. Galvanizing: Zinc with 0.5 percent (0.5%) minimum, nickel added

I. Galvanized surface primer: 95 percent (0.95%) zinc dust, organic vehicle primer

2.02 FABRICATION

A. Match-mark materials for field assembly. Ream unmatched holes in shop assembly of field connections. Reject and replace with new pieces any piece weakened by reaming to a point where the strength of the joint is impaired.

B. Welding of parts shall be done only where shown or specified and by welders and welding operators qualified for the procedures used.

2.03 FINISHES

A. Galvanize members and their attachments exposed in whole or part to the weather. Galvanize other members as indicated on the Drawings. Galvanizing shall be done after fabrication and in accordance with ASTM A123. Hardware galvanizing shall be in accordance with ASTM A153. Thoroughly clean, pickle, flux, and immerse members in bath of molten zinc until their temperature becomes the same as the bath.

PART 3 EXECUTION

3.01 INSTALLATION

A. Furnish and install temporary bracing to provide stability during erection and to prevent distortion or damage to the framing due to wind, seismic, or erection forces. Remove temporary bracing when erection is complete.

B. Use drift pins only to bring members into position and not to enlarge or distort holes.

C. Make all steel-to-steel connections by high strength bolting except where field welding is shown or specified. Provide not less than two (2) 3/4-inch bolts per connection and use not less than 1/4-inch-thick clip angles.

D. Tighten bolted connections designated as bearing-type connections to the snug tight condition. Tighten all other bolted connections to full pretension by turn-of-nut or calibrated wrench tightening per the requirements of Section 8 of the Specification for Structural Joints Using High-Strength Bolts.

E. Field welding shall be done only where shown or specified and only by welders qualified for the procedures used. No welding shall be done when surfaces are wet, exposed to rain or wind, or when welders are exposed to inclement conditions that will hamper good workmanship.

F. Each bolting crew and welder shall be assigned an identification mark. This mark shall be made at each completed connection with a paint stick.

G. After erection, prime paint abrasions, field welds, and unprimed surfaces using shop primer except surfaces designated to be unpainted or surfaces in contact with concrete.

H. After erection, prime paint abrasions, and field welds on galvanized surfaces with galvanized surface primer.

3.02 FIELD TESTING

A. Allow the Engineer free access to the work. Notify the Engineer in writing four (4) working days in advance of high strength bolting or field welding operations.

B. High strength bolting will be inspected visually. All high strength bolts shall have the turned portion marked with reference to the steel being connected after the nut has been made snug and prior to final tightening. Retighten rejected bolts or remove and provide new bolts. In cases of disputed bolt installations, the bolts in question shall be checked using a calibrated wrench certified by an independent testing laboratory approved by the Engineer. The certification shall be at the Contractor’s expense.

C. Field welding will be inspected visually by AWS certified welding inspectors provided by the Owner. Comply with all requests of inspectors to correct deficiencies.

D. The fact that steel work has been accepted at the shop and mill will not prevent its final rejection at the site, before or after erection, if it is found to be defective.

E. Remove rejected steel work from the site within ten (10) working days after notification of rejection.

END OF SECTION

SECTION 05210

STEEL JOISTS

PART 1 GENERAL

1.01 SCOPE OF WORK

A. Furnish all materials, equipment, and labor necessary for the installation steel joists as shown on the Drawings, and as specified herein.

B. Steel joists are shown on the Drawings, including general layout and type of joists required.

C. Contractor is responsible for coordinating all related work specified in other sections including steel joist supports, field painting, fireproofing, flashing, and other miscellaneous items.

D. This Section includes the following:

1. K-series steel joists
2. KCS – series joists
3. LH-series long-span steel joists
4. Joist Bridging
5. Joist Accessories

1.02 RELATED SECTIONS

A. Division 04 – Masonry

B. Section 05120 – Structural Steel

C. Section 05310 – Metal Decking

D. Section 05513 – Galvanizing

E. Division 09 - Painting

1.03 REFERENCED STANDARDS

A. American Iron and Steel Institute (AISI), latest edition:

1. AISI S100 North American Specification for Design of Cold-Formed Steel Structural Members, latest edition

B. ASTM International (ASTM), latest edition:

1. ASTM A36 Standard Specification for Carbon Structural Steel

2. ASTM A123 Standard Specification for Zinc (Hot-Dip Galvanized) Coatings on Iron and Steel Products

3. ASTM A153 Standard Specification for Zinc Coating (Hot-Dip) on Iron and Steel Hardware

4. ASTM A307 Standard Specification for Carbon Steel Bolts, Studs, and Threaded Rod 60 000 PSI Tensile Strength

5. ASTM A780 Standard Practice for Repair of Damaged and Uncoated Areas of Hot-Dip Galvanized Coatings

6. ASTM F3125 Standard Specification for High Strength Structural Bolts and Assemblies, Steel and Alloy Steel, Heat Treated, Inch Dimensions 120 ksi and 150 ksi Minimum Tensile Strength, and Metric Dimensions 830 MPa and 1040 MPa Minimum Tensile Strength

C. American Welding Society (AWS), latest edition:

1. AWS D1.1 Structural Welding Code – Steel

D. Steel Joist Institute (SJI), latest edition:

1. Standard Specification for K-Series, LH-series, and DLH-Series Open Web Steel Joists and for Joist Girders - SJI 100

2. Code of Standard Practice for Steel Joists and Joist Girders – SJI COSP

1.04 DEFINITIONS

A. SJI "Specifications" : Steel Joist Institute's "Standard Specifications, Load Tables and Weight Tables for Steel Joists and Joist Girders."

B. Special Joists: Steel joists or joist girders requiring modification by manufacturer to support nonuniform, unequal, or special loading conditions that invalidate load tables in SJI's "Specifications."

1.05 PERFORMANCE REQUIREMENTS

A. Structural Performance: Provide special joists and connections capable of withstanding design loads indicated.

B. Design special joists to withstand design loads with live load deflections no greater than the following:

1. Floor Joists: Vertical deflection of 1/360 of the span.

2. Roof Joists: Vertical deflection of 1/360 of the span.

1.06 SUBMITTALS

A. General: Submit each item in this section according to the conditions of the contract and Section 01300, Submittals.

B. Qualification Data: Submit manufacturer’s qualifications and certificates.

C. Product Data: Submit manufacturer's specification and installation instructions for each steel joist type and specified accessories. Include manufacturer’s shop applied prime coating product information and certify compatibility with field applied coatings for steel joists and accessories indicated to receive field applied coatings.

D. Shop Drawings: Submit detailed steel joist placement drawings showing layout for each type of joist, connections, anchorage details, extensions, and accessories. Include length, camber, mark, number, type, location, spacing of joists and bridging.

E. Mill Certificates: Submit mill reports for the structural steel used in the joists and for the bolts certifying compliance with specified requirements.

F. Certification that welders are qualified in accordance with AWS D1.1, on the shop and field welding procedures to be used.

1.07 QUALITY ASSURANCE

A. Manufacturer Qualifications: A manufacturer certified by SJI to manufacture joists complying with applicable standard specifications and load tables of SJI “Standard Specification.” Provide qualifications and certificates of compliance with submittal.

1. The steel joist manufacturer shall be a firm experienced in manufacturing joists similar to those indicated for this Project and with a record of successful in-service performance for a minimum of 2 years.

B. SJI Specifications: Comply with standard specifications in SJI's "Specifications" that are applicable to types of joists indicated on the Drawings.

C. Welding: Qualify procedures and personnel according to AWS D1.1, "Structural Welding Code - Steel."

D. Joists shall be designed in accordance with these specifications as simply supported uniformly loaded trusses supporting a floor or roof deck so constructed as to brace the top chord of the joists against lateral buckling. Where any applicable design feature is not specifically covered herein, the design shall be in accordance with the following specifications of latest adoption:

1. American Institute of Steel Construction Specification for Design, Fabrication and Erection of Structural Steel for Buildings (Allowable Stress Design), where the material used consists of plates, shapes or bars.

2. American Iron and Steel Institute Specification for the Design of Cold-Formed Steel Structural Members AISI S100, for members which are formed from sheet or strip material.

1.10 DELIVERY, STORAGE, AND HANDLING

A. Deliver, store, and handle joists as recommended in SJI “Specifications.”

B. Protect joists and accessories from corrosion, deformation, and other damage during delivery, storage, and handling.

PART 2 PRODUCTS

2.01 MATERIALS

A. Steel: Comply with SJI “Specifications” for chord and web members.

B. Steel Bearing Plates: ASTM A36

C. Carbon-Steel Bolts and Threaded Fasteners: ASTM A 307, Grade A, carbon-steel, hex-head bolts and threaded fasteners; carbon-steel nuts; and flat, unhardened steel washers.

1. Finish: Plain, uncoated where joists are scheduled to receive field applied coating system. Hot-dipped galvanized where joists are indicated to be hot-dipped galvanized.

D. High-Strength Bolts, Nuts, and Washers: ASTM F 3125, Grade A325, Type 1, heavy hex steel structural bolts; ASTM A 563 heavy hex carbon-steel nuts; and ASTM F 436 hardened carbon-steel washers.

1. Finish: Plain, uncoated where joists are scheduled to receive field applied coating system. Hot-dipped galvanized where joists are indicated to be hot-dipped galvanized.

E. Welding Materials: Comply with the requirements of SJI “Specifications” and AWS D1.1 for the materials being welded.

F. Shop Primer: SSPC-Paint 15, or manufacturer's standard shop primer complying with performance requirements in SSPC-Paint 15. Primer paint shall be light grey color unless noted otherwise on the drawings; compatible with finish coats on exposed joists scheduled to receive field applied coating system.

G. Galvanized Steel Repair Paint: ASTM A 780 Zinc-rich paint

2.02 K-SERIES STEEL JOISTS

A. Manufacture steel joists of type indicated according to "Standard Specifications for Open Web Steel Joists, K-Series" in SJI's "Specifications," with steel-angle top- and bottom-chord members, underslung ends, and parallel top chord.

1. Joist Type: K-series steel joists and KCS-type K-series steel joists.

B. Steel Joist Substitutes: Manufacture according to "Standard Specifications for Open Web Steel Joists, K-Series" in SJI's "Specifications," with steel-angle or -channel members.

C. Comply with AWS requirements and procedures for shop welding, appearance, quality of welds, and methods used in correcting welding work.

D. Splices in Chord Members: All splices shall be designed and provided in accordance with SJI “Specifications.”

1. Shop splices shall be permitted to occur at any point in chord members.

2. Field splices shall be designed by the manufacturer and shall be either bolted or welded. Splices shall be designed for the member force, but not less than 50 percent of the member strength.

E. Holes in Chord Members: Provide holes in chord members where required for securing other work to steel joists; however, deduct area of holes from the area of chord when calculating strength of member per AISC Section 1.14.

F. Extended Ends: Extend bearing ends of joists where indicated, complying with manufacturer's standards and the requirements of applicable SJI "Specifications" and load tables.

G. Camber joists according to SJI's "Specifications" unless noted otherwise on the drawings.

H. Equip bearing ends of joists with manufacturer's standard beveled ends or sloped shoes if joist slope exceeds 1/4 inch per 12 inches.

2.03 LONG-SPAN STEEL JOISTS

A. Manufacture steel joists according to "Standard Specifications for Longspan Steel Joists, LHSeries in SJI's "Specifications," with steel-angle top- and bottom-chord members; of joist type and end and top-chord arrangements as indicated.

1. Joist Type: LH-series steel joists

B. Comply with AWS requirements and procedures for shop welding, appearance, quality of welds, and methods used in correcting welding work.

C. Splices in Chord Members: All splices shall be designed and provided in accordance with SJI "Specifications."

1. Shop splices shall be permitted to occur at any point in chord members.

2. Field splices shall be designed by the manufacturer and shall be either bolted or welded. Bolted field splices shall be provided where steel joists are indicated to be galvanized. Splices shall be designed for the member force, but not less than 50 percent of the member strength.

D. Holes in Chord Members: Provide holes in chord members where required for securing other work to steel joists; however, deduct area of holes from the area of chord when calculating strength of member per AISC Section 1.14.

E. Camber long-span steel joists according to SJI's "Specifications."

F. Equip bearing ends of joists with manufacturer's standard beveled ends or sloped shoes if joist slope exceeds 1/4 inch per 12 inches.

2.04 JOIST ACCESSORIES

A. Bridging: Provide bridging anchors and number of rows of horizontal or diagonal bridging of material, size, and type required by SJI's "Specifications" for type of joist, chord size, spacing,

and span. Provide bridging anchors for ends of bridging lines terminating at walls or beams. Furnish additional erection bridging if required for stability.

B. Steel bearing plates with integral anchorages are specified in Section 05500, Miscellaneous Metals.

C. Supply miscellaneous accessories, including splice plates and bolts required by joist manufacturer to complete joist installation.

2.05 CLEANING AND SHOP PAINTING

A. Clean and remove loose scale, heavy rust, and other foreign materials from fabricated joists and accessories by hand-tool cleaning, SSPC-SP 2 or power-tool cleaning, SSPC-SP 3.

B. Do not prime paint joists and accessories to receive galvanized coatings or sprayed fire-resistive materials.

C. Apply one shop coat of primer to steel joists and accessories by spray, dipping, or other method to provide a continuous dry paint film thickness of not less than 1.0 mil.

2.06 GALVANIZING

A. Galvanize steel joists and accessories by hot-dipped galvanizing in accordance with ASTM A123 unless otherwise indicated on the Drawings.

1. Fasteners and hardware shall be hot-dipped galvanized in accordance with ASTM A153 when steel joists are indicated to be galvanized.

2.07 INSPECTION

A. Joists shall be inspected by the manufacturer before shipment to ensure compliance of materials and workmanship with the requirements of these specifications.

PART 3 EXECUTION

3.01 EXAMINATION

A. Prior to starting erection of steel joists, examine supporting structural framing, substrates, embedded bearing plates, and field connections for compliance with requirements and installation tolerances and other conditions affecting performance of work of this section.

1. Proceed with erection and installation only after any unsatisfactory conditions have been corrected

3.02 INSTALLATION – GENERAL

A. Do not start installation of joists until supporting construction is in place and secured.

B. Handle, place, and secured steel joists in accordance with SJI "Specifications," SJI Code of Standard Practice, approved placement plans, joist manufacturer's written recommendations, and requirements of this section.

C. Care shall be exercised at all times to avoid damage to the joists and accessories through careless handling during unloading, storing and erecting.

D. Comply with all applicable OSHA, State, and Local rules for erection.

E. Place joists on supporting work, space, adjust, and align joists accurately in location before permanently fastening.

F. Install temporary bracing and erection bridging, connections, and anchors to ensure that joists are stabilized during construction.

G. Provide minimum bearing requirements specified by SJI.

H. All field welding shall be performed in a work-man-like manner to ensure that the joists are not damaged by such welding. All field welds shall conform to the requirements of AWS D1.1 for the material being welded. Field welding shall not damage the joists.

I. Do not field cut or otherwise alter structural members of the joists.

3.03 INSTALLATION OF BRIDGING

A. Install and connect bridging concurrently with joist erection. All bridging and bridging anchors shall be completely installed before construction loads are placed on the joists.

B. Bridging shall support the top chords against lateral movement during the construction period and shall hold the steel joists in the approximate position as shown on the plans.

C. The ends of all bridging lines terminating at walls or beams shall be anchored thereto.

3.04 END ANCHORAGE

A. Anchor joists resting on steel bearing plates on masonry or concrete with welds, bolts, or a combination of the two in accordance with the SJI "Specifications" for type of joists used.

B. Anchor steel joists to supporting framework with welds, bolts, or a combination of the two in accordance with SJI "Specifications" for type of joist used.

C. Coordinate welding sequence and procedure with placement of joists. Comply with AWS requirements and procedures for welding, appearance and quality of welds, and methods used in correcting welding work.

3.05 ERECTION STABILITY AND HANDLING

A. When it is necessary for the erector to climb on the joists, extreme caution must be exercised since unbridged joists may exhibit some degree of instability under the erector's weight.

B. During the construction period, the Contractor shall provide means for adequate distribution of concentrated loads so that the carrying capacity of any joist is not exceeded.

C. No construction loads shall be allowed on the steel joists until all bridging is installed and anchored, and all joist bearing ends are attached.

D. Erection stability and handling of joists and joist girders shall be in accordance with SJI "Specifications" and requirements of this section.

1. Stability Requirements

a. One end of all joists shall be attached to its support before allowing the weight of an erector on the joists.

b. When bolted connections are used, the bolts must be snug tightened.

c. Bolted diagonal bridging shall be installed in accordance with SJI "Specifications."

d. Hoisting cables shall not be released until this bolted diagonal bridging is completely installed.

e. No loads other than the weight of one erector are allowed on the joist until all bridging is completely installed and all joist ends are attached.

f. In the case of bottom chord bearing joists, the ends of the joist must be restrained laterally before releasing the hoisting cables.

g. After the joist is straightened and plumbed, and all bridging is completely installed and anchored, the ends of the joists shall be fully connected to the supports.

3.06 REPAIRS AND PROTECTION

A. Touchup Painting for Joists that are to Receive Finish Coat: After installation, promptly clean, prepare, and prime or reprime field connections, rust spots, and abraded surfaces of prime painted joists, bearing plates, abutting structural steel, and accessories.

1. Clean and prepare surfaces by hand-tool cleaning, SSPC-SP 2, or power-tool cleaning, SSPC-SP 3.

2. Apply a compatible primer of same type as shop primer used on adjacent surfaces.

B. Field repair to joists must be performed only in accordance with written direction from the joist manufacturer. The contractor shall submit all repair drawings to the Engineer.

C. Field modifications to joists are not permitted without the written approval from the joist manufacturer. The contractor shall submit all correspondence to the Engineer.

END OF SECTION

SECTION 05310

METAL DECKING

PART 1 GENERAL

1.01 SCOPE OF WORK

A. Furnish all materials, equipment, and labor required to install metal decking as shown on the Drawings, and as specified herein.

B. Contractor is responsible for coordinating all related work specified in other sections including structural deck supports, field painting, fireproofing, roof sumps, flashings, drains, collars, gutters, downspouts, and other miscellaneous items.

1.02 RELATED SECTIONS

A. Section 05120 – Structural Steel

B. Section 05210 – Steel Joists

C. Section 05513 - Galvanizing

D. Division 07 – Thermal and Moisture Protection

E. Division 09 – Painting

1.03 REFERENCED STANDARDS

A. ASTM International (ASTM), latest edition:

1. ASTM A653 Standard Specification for Steel Sheet, Zinc-Coated (Galvanized) or Zinc-Iron Alloy-Coated (Galvannealed) by the Hot-Dip Process

2. ASTM A924 Standard Specification for General Requirements for Steel Sheet, Metallic-Coated by the Hot-Dip Process

3. ASTM 1008 Standard Specification for Steel, Sheet, Cold-Rolled, Carbon, Structural, High-Strength Low-Alloy, High-Strength Low-Alloy with Improved Formability, Required Hardness, Solution Hardened, and Bake Hardenable

B. American Iron and Steel Institute (AISI), latest edition:

1. AISI S100 North American Specification for Design of Cold-Formed Steel Structural Members, latest edition

C. American Welding Society (AWS), latest edition:

1. AWS D1.1 Structural Welding Code – Steel

2. AWS D1.3 Structural Welding Code – Sheet Steel

D. Steel Deck Institute (SDI), latest edition:

1. ANSI/SDI SD Standard for Steel Roof Deck

2. ANSI/SDI QA/QC Standard for Quality Control and Quality Assurance for the Installation of Steel Deck

1.04 SUBMITTALS

A. General: Submit each item in this section according to the conditions of the contract and Specification Section 01300, Submittals.

B. Product Data: Submit manufacturers' specification and installation instructions for each type of metal decking and specified accessories. Include steel deck dimensions and finishes.

C. Shop Drawings: Submit metal deck placement drawings showing layout for each type of deck panels, deck attachment details, sump pans, cut openings and accessories specified in the contract documents.

D. Welder certificates: If field welding is performed, welder certificates signed by Contractor certifying that welders comply with requirements specified under "Quality Assurance", or if mechanical fasteners are used, certification from the manufacturer evidencing compliance of mechanical fasteners with design requirements based upon comprehensive testing.

1.05 QUALITY ASSURANCE

A. Codes and Standards: Comply with applicable provisions of the following unless otherwise indicated.

1. American Iron and Steel Institute (AISI) Specification for Design of Cold Formed Steel Structural Members, latest edition

2. ANSI/SDI SD Standard for Steel Deck

3. American Welding Society (AWS) D1.3 Structural Welding Code/Sheet Metal, latest edition

4. Steel Deck Institute (SDI) Design Manual, latest edition

B. Welding Qualifications: Certify that each welder has satisfactorily passed AWS qualification test for the welding process involved, and if applicable, has undergone recertification.

1. AWS D1.3 Structural Welding Code – Sheet Steel

C. Mechanical Fasteners: If required by the fastener manufacturer, certify that each mechanical fastener installer has satisfactorily passed certification tests as required by the fastener manufacturer.

1.06 DELIVERY, STORAGE AND HANDLING

A. Protect steel deck from corrosion, deformation, and other damage during delivery, storage and handling.

B. If ground storage is needed, the deck bundles must be stored off the ground, with one end elevated to provide drainage. Bundles must be protected against condensation with a ventilated waterproof covering. Bundles must be stacked so there is no danger of tipping, sliding, rolling, shifting or material damage. Bundles must be periodically checked for tightness and retightened as necessary (so wind cannot loosen sheets) to prevent damage caused by the wind.

C. Deck bundles placed on the building frame must always be placed near a main supporting beam at a column or wall. In no case are the bundles to be placed on unbolted frames or unattached and unbridged joists. The structural frame must be properly braced to receive the bundles.

PART 2 PRODUCTS

2.01 MANUFACTURER

A. A manufacturer offering steel roof deck products to be incorporated into the work must be a member of the Steel Deck Institute.

2.02 MATERIALS

A. Steel deck shall be designed and fabricated to comply with ANSI/SDI SD Standard for Steel Deck. Deck profile, gauge, finish, and side-lap configuration shall be as indicated on the Drawings.

B. Sheet steel for galvanized roof deck shall conform to ASTM A653 Structural Steel (SS), Grade 50 (50 ksi)or higher.

1. Galvanizing shall conform to ASTM A924 with a minimum coating class of G60 (Z180) as defined in A653.

C. Sheet steel for uncoated steel shop primer painted roof deck shall conform to ASTM A1008, Structural Steel (SS) Grade 50 (50 ksi)minimum .

1. Steel deck shall have a coat of manufacturers standard rust-inhibitive shop primer paint applied to top and bottom sides. Primer on bottom side of roof deck shall be compatible with finish coating systems where applicable.

2.03 ACCESSORIES

A. Provide manufacturer's standard accessory materials for deck that comply with requirements indicated.

B. The deck manufacturer shall furnish ridge and valley plates, flat plates at change of deck direction and sump pans, as shown on plans to provide a finished surface for the application of roof installation and roof covering.

C. Column Closures, End Closures, Z-Closures, Cover Plates, Ridge and Valley Plates, and other Miscellaneous Sheet Metal Deck Accessories: Galvanized steel sheet, minimum yield strength of

33,000 psi, not less than 0.0358-inch (20 gage) design uncoated thickness of profile indicated or required for application.

D. Pour Stops and Girder Fillers: Galvanized Steel sheet, minimum yield strength of 33,000 psi, and of thickness and profile recommended by SDI for overhang and slab depth.

E. Sump Pans: Single-piece steel sheet, 0.0747 inch (14 gauge) thick galvanized steel sheet. For drains, cut holes in the field.

F. Weld Washers: Uncoated steel sheet, shaped to fit deck rib, 0.0598 inch (16 gauge) thick, with factory-punched hole of 3/8-inch minimum diameter.

G. Mechanical Support Fasteners: Corrosion-resistant, low-velocity, power-actuated or pneumatically driven carbon-steel fasteners; or self-drilling, self-threading screws. Size and fastening pattern as indicated.

H. Screws for Side-Lap Fastening: Corrosion-resistant, hexagonal washer head; self-drilling, carbon-steel screws, diameter and spacing or quantity as indicated on structural drawings.

PART 3 EXECUTION

3.01 EXAMINATION

A. Examine support framing and field conditions for compliance with requirements and installation tolerances and other conditions affecting performance of Work of this section. All OSHA, State and Local rules for erection must be followed.

3.02 PREPARATION

A. Place deck in accordance with approved placement plans.

B. Locate deck bundles to prevent overloading of support members.

3.03 INSTALLATION – GENERAL

A. Install deck panels and accessories according to SDI Specifications, SDI Manual of Construction with Steel Deck, structural drawings, and in accordance with the installation drawings marked for field use, and requirements of this section.

B. Place deck panels on structural supports and adjust to final position with ends lapped or butted over structural supports. Install deck ends over supports with a minimum end bearing of 2 inches, or as indicated on the approved installation drawings. Lapped or butted end joints shall be 3 inches minimum at open-web steel joists or 2 inches at other structural supports. Attach the deck panels firmly to the supports immediately after placement in order to form a safe working platform.

C. Cut and neatly fit deck and accessories at skew conditions, around openings and other work projecting through or adjacent to the decking.

D. Trades that subsequently cut unscheduled openings through the roof deck are responsible for reinforcing those openings in accordance with the requirements of the Engineer.

3.04 ATTACHMENT

A. Anchor deck units to steel supporting members by arc spot puddle welds or approved mechanical fasteners.

1. Arc seam welds shall be 3/8-inch by 1-1/4-inch minimum visible dimensions with the attachment pattern shown on placement drawings. Welds shall comply with AWS requirements and procedures for manual shielded metal arc welding, appearance and quality of welds, and methods used for correcting welding work.

2. Mechanical fasteners, either powder actuated, pneumatically driven, or self-drilling screws may be used in lieu of welding, provided product data has been submitted and approved.

B. Side lap attachment: Fasten side laps of deck units with spans greater than 5 feet at mid span or 36-inch intervals, whichever distance is smaller, or as shown on design drawings using one of the following methods:

1. #10 self-drilling screws unless indicated otherwise on the design drawings

2. Crimp or button punching

3. Arc seam welds 3/8-inch by 1-1/4-inch minimum visible dimensions

C. Perimeter Edge Attachment: Fasten perimeter edges of deck units at minimum 36-inch intervals or as shown on design drawings using one of the following methods:

1. Arc seam welds 3/8-inch by 1-1/4-inch minimum visible dimensions

2. Mechanical fasteners, either powder actuated, pneumatically driven or self-drilling screws may be used in lieu of welding, provided product data has been submitted and approved

D. Deck accessories shall be installed and fastened to supporting members by in accordance with ANSI/SD Standard for Steel Deck using arc seam welds or self-drilling screws at 12-inch maximum intervals or as shown on design drawings.

E. Roof Sump Pans: Install where indicated in architectural details in openings cut in roof deck and mechanically fasten flanges to top of deck. Space mechanical fasteners not more than 12 inches apart with at least one fastener at each corner.

1. Install reinforcing members as indicated to span between supports and weld or mechanically fasten

3.05 REPAIRS

A. Before placement of roof insulation and roof covering, the deck shall be inspected for tears, dents or other damage that may prevent the deck from acting as a structural roof base. The need for repair of the damaged deck shall be determined by the Architect or Engineer of Record.

3.06 CONSTRUCTION GUIDELINES

A. Do not use deck units as a working platform or storage area until units are permanently attached in position.

B. Construction loads must not exceed load carrying capacity of deck.

3.07 FIELD QUALITY CONTROL

A. Tests and Inspections:

1. Special inspections and qualification of welding special inspectors for cold-formed steel floor and roof deck in accordance with quality-assurance inspection requirements of ANSI/SDI QA/QC.

    a. Perform inspection of field welds and other inspections as indicated on structural drawings.

    b. Perform inspection of the side lap screw connections to ensure that the proper size and number of screw attachments per span have been installed between supports.

    c. Perform inspection of the support connections to ensure that the proper size and number of attachments per deck sheet have been installed. Ensure that the fasteners are installed per the manufacturer's instructions and quality assurance requirements.

    d. Inspect other attachments of deck and accessories according to manufacturer's instructions and quality assurance requirements, or per industry standards.

END OF SECTION

SECTION 05513

GALVANIZING

PART 1 GENERAL

1.01 SCOPE OF WORK

A. Furnish all labor, equipment, and materials required to provide hot dip galvanizing of structural and miscellaneous steel members, steel fabrications, assemblies, and hardware in accordance with this specification.

B. Materials to be galvanized are to be furnished under other Sections, as applicable.

1.02 RELATED SECTIONS

A. Section 05120 – Structural Steel

B. Section 05210 – Steel Joists

C. Section 05310 – Metal Deck

D. Division 09 – Painting

1.03 REFERENCE STANDARDS

A. American Galvanizers Association, Inc. (AGA), latest edition:

1. The Design of Products to be Hot Dip Galvanized after Fabrication
2. Recommended Details for Galvanized Structures
3. Inspection of Products Hot Dip Galvanized after Fabrication

B. ASTM International (ASTM), latest edition:

1. ASTM A53 Standard Specification for Pipe, Steel, Black and Hot-Dipped, Zinc-Coated, Welded and Seamless

2. ASTM A123 Standard Specification for Zinc (Hot-Dip Galvanized) Coatings on Iron and Steel Products

3. ASTM A143 Standard Practice for Safeguarding Against Embrittlement of Hot-Dip Galvanized Structural Steel Products and Procedure for Detecting Embrittlement

4. ASTM A153 Standard Specification for Zinc Coating (Hot-Dip) on Iron and Steel Hardware

5. ASTM A384 Standard Practice for Safeguarding Against Warpage and Distortion During Hot-Dip Galvanizing of Steel Assemblies

6. ASTM A385 Standard Practice for Providing High-Quality Zinc Coatings (Hot-Dip)

7. ASTM A563 Standard Specification for Carbon and Alloy Steel Nuts

8. ASTM A780 Standard Practice for Repair of Damaged and Uncoated Areas of Hot-Dip Galvanized Coatings

9. ASTM D6386 Standard Practice for Preparation of Zinc (Hot-Dip Galvanized) Coated Iron and Steel Product and Hardware Surfaces for Painting

10. ASTM F3125 Standard Specification for High Strength Structural Bolts and Assemblies, Steel and Alloy Steel, Heat Treated, Inch Dimensions 120 ksi and 150 ksi Minimum Tensile Strength, and Metric Dimensions 830 MPa and 1040 MPa Minimum Tensile Strength

1.04 QUALITY ASSURANCE

A. Hot-dip galvanizing shall be performed in accordance with ASTM A385 and the recommendations of the AGA.

1.05 DELIVERY, STORAGE AND HANDLING

A. Handling and Storage: Handle and protect galvanized materials from damage to zinc coating. Space surfaces of galvanized materials to permit free circulation of air to avoid humid storage stain.

B. Damaged Material: Repair material showing evidence of damage to zinc coating. If not repairable, material with damaged coating will be subject to rejection.

PART 2 PRODUCTS

2.01 MATERIALS TO BE GALVANIZED

A. Materials to be galvanized shall be suitable for galvanizing as specified in ASTM A384 and A385.

B. Inspect materials and assemblies before galvanizing and determine whether they are suitable for galvanizing. Replace, or modify as required, items with are not suitable for galvanizing.

2.02 GALVANIZING

A. Steel members, fabrications, and assemblies specified to be galvanized shall be hot-dip galvanized after fabrication in accordance with ASTM A123.

B. Safeguard against embrittlement in accordance with ASTM A143.

C. Safeguard against warpage or distortion of steel members in accordance with ASTM A384. Notify the Engineer of potential warpage problems that may require modification in design, before proceeding with steel fabrications.

D. Bolts, nuts, washers, and iron and steel hardware components specified to be galvanized shall be hot-dip galvanized in accordance with ASTM A153. Nuts shall be tapped after galvanizing as specified in ASTM A563. Coat nuts with waterproof lubricant, clean and dry to the touch. High strength bolts for structural steel joints shall be hot-dip galvanized in accordance with ASTM F3125.

E. Pipe specified to be galvanized shall be hot-dip galvanized in accordance with ASTM A53.

F. Metal deck shall be galvanized as specified in Section 05310, Metal Decking.

2.03 PROTECTIVE TREATMENTS

A. Galvanizing materials subject to extended periods of storage in open, exterior locations shall be given either a passivating treatment or a light oiling to prevent humid storage stain. Treatment, solution, and process shall be submitted for approval by the Engineer. However, chromate passivation should not be used on items that are to be painted.

B. Method of protective treatment shall be confirmed for compatibility with subsequent treatments and applications of coatings, prior to application of protective treatment.

2.04 PAINTED GALVANIZED SURFACES

A. Prepare galvanized metal surfaces to be shop or field painted in accordance with ASTM D6386.

B. Where specified, shop coat galvanized metal surfaces in accordance with Division 09, Painting.

PART 3 EXECUTION

3.01 FIELD INSPECTION

A. Installed galvanized materials, fabrications, and assemblies shall be visually inspected in conformance with the AGA inspection guidelines.

3.02 TOUCH-UP AND REPAIR

A. Repair damaged galvanized surfaces in accordance with ASTM A780 using organic zinc-rich paint.

B. Dry film thickness of applied repair materials shall not be less than the galvanized coating thickness required by ASTM A53, A123, or A153, as applicable.

END OF SECTION

THIS PAGE INTENTIONALLY LEFT BLANK

SECTION 07110

FLUID-APPLIED MEMBRANE AIR BARRIERS

PART 1 GENERAL

1.01 SUMMARY

A. This Section includes:

1. Fluid-applied membrane air barrier, vapor permeable.

B. Scope of Work: Install fluid-applied membrane air barrier on all exposed exterior walls and soffits. Tie into roofing systems and below-grade waterproofing systems to maintain a continuous air barrier assembly.

C. Related Sections include the following:

1. Section 04200 - Masonry

2. Section 07210 - Building Insulation

3. Section 07901 - Joint Sealants

1.02 DEFINITIONS

A. Air Barrier Assembly: The collection of air barrier materials and auxiliary materials applied to an opaque wall, including joints and junctions to abutting construction, to control air and water movement through the wall.

1.03 PERFORMANCE REQUIREMENTS

A. Retain one of first two options in paragraph below depending on whether a vapor-retarding or -permeable air barrier is required. Consider retaining third option if air barrier will serve as a primary or secondary drainage plane.

B. General: Air barrier shall be capable of performing as a continuous vapor- permeable air barrier and as a liquid-water drainage plane flashed to discharge to the exterior incidental condensation or water penetration. Air barrier assemblies shall be capable of accommodating substrate movement and of sealing substrate expansion and control joints, construction material changes, and transitions at perimeter conditions without deterioration and air leakage exceeding specified limits.

1. Connect and seal exterior wall air/vapor barrier membrane continuously to roofing membrane, concrete below-grade structures, floor-to floor construction, exterior glazing and window systems, glazed curtain-wall systems, storefront systems, exterior louvers, exterior door framing, and other construction used in exterior wall openings using accessory materials according to manufacturer's tested assembly.

C. Membrane Air Permeance: Not to exceed 0.004 cfm/ sq. ft. of surface area at 1.57-lbf/sq. ft. pressure difference; ASTME2178.

D. Membrane Vapor Permeance: Not less than 10 perms; ASTME96.

E. Air Barrier Assembly Air Leakage: Not to exceed 0.04 cfm x sq. ft. of surface area at 1.57 lbf/sq. ft.; ASTM E 2357.

1.04 SUBMITTALS

A. Product Data: Include manufacturer's written instructions for evaluating, preparing, and treating substrate; technical data; and tested physical and performance properties of air barrier.

B. Shop Drawings: Show locations and extent of air barrier. Include details for substrate joints and cracks, counterflashing strip, penetrations, inside and outside corners, terminations, and tie-ins with adjoining construction.

1. Include details of interfaces with other materials that form part of air barrier
2. Include details of mockups

C. Product Certificates: For air barriers, certifying compatibility of air barrier and accessory materials with Project materials that connect to or that come in contact with the barrier; signed by product manufacturer.

D. Qualification Data: For Applicator.

E. Product Test Reports: Based on evaluation of comprehensive tests performed by a qualified testing agency, for air barriers.

1.05 QUALITY ASSURANCE

A. Applicator Qualifications: A firm experienced in applying air barrier materials similar in material, design, and extent to those indicated for this Project, whose work has resulted in applications with a record of successful in-service performance.

B. Pre-installation Conference: Conduct conference at Project site.

1. Include air barrier manufacturer’s representative and installers of other construction connecting to air barrier, including roofing, waterproofing, masonry, sealants, windows, glazed curtain walls, and door frames.

2. Review air barrier requirements including surface preparation, substrate condition and pretreatment, minimum substrate curing period, forecasted weather conditions, special details and sheet flashings, mockups, installation procedures, sequence of installation, testing and inspecting procedures, and protection and repairs.

1.06 DELIVERY, STORAGE, AND HANDLING

A. Store liquid materials in their original undamaged packages in a clean, dry, protected location and within temperature range required by air barrier manufacturer.

B. Remove and replace liquid materials that cannot be applied within their stated shelf life.

C. Store rolls according to manufacturer's written instructions.

D. Protect stored materials from direct sunlight.

1.07 PROJECT CONDITIONS

A. Environmental Limitations: Apply air barrier within the range of ambient and substrate temperatures recommended by air barrier manufacturer. Protect substrates from environmental conditions that affect performance of air barrier. Do not apply air barrier to a damp or wet substrate or during snow, rain, fog, or mist.

1.08 COORDINATION

A. Coordinate installation of fluid-applied membrane air barrier with related Work specified in other Sections to ensure that wall assemblies, including sheathing and flashings, are protected against damage from the effects of weather, age, corrosion, moisture, and other causes. Do not allow water to penetrate behind fluid-applied membrane air barrier.

PART 2 PRODUCTS

2.01 FLUID-APPLIED MEMBRANE AIR BARRIER

A. Fluid-Applied, Vapor-Permeable Membrane Air Barrier:

1. Basis-of-Design Product: The design is based on the product named. Subject to compliance with requirements, provide either the named product or a comparable product by one of the other specified manufacturers. Comparable products are subject to review and approval through the submittal process specified.

a. W. R. Grace & Co., Perm-A-Barrier VPL.

2. Available Manufacturers: Subject to compliance with requirements, manufacturers offering products that may be incorporated into the Work include, but are not limited to, the following:

a. Carlisle
b. PROSOCO

2.02 AUXILIARY MATERIALS

A. General: Auxiliary materials recommended by air barrier manufacturer for intended use and compatible with air barrier membrane. Liquid-type auxiliary materials shall comply with VOC limits of authorities having jurisdiction.

B. Primer: Liquid primer recommended for substrate by manufacturer of air barrier material.

C. Counter flashing Strip: Manufacturer’s standard self-adhering sheet consisting of rubberized asphalt laminated to a cross laminated polyethylene film with release liner backing.

D. Joint Reinforcing Strip: Air barrier manufacturer's glass-fiber-mesh tape.

E. Corner Reinforcing: Air barrier manufacturer's glass-fiber-mesh preformed fabric.

F. Substrate Patching Membrane: Manufacturer's standard trowel-grade substrate filler.

G. Adhesive and Tape: Air barrier manufacturer's standard adhesive and pressure-sensitive adhesive tape.

H. Modified Bituminous Transition Strip: Manufacturer's standard -vapor-retarding,, smooth-surfaced, self-adhering rubberized asphalt laminated to a polyethylene film with release liner backing.

I. Sprayed Polyurethane Foam Sealant: 1- or 2-component, foamed-in-place, polyurethane foam sealant, 1.5 to 2.0 lb/cu. ftdensity; flame spread index of 25 or less according to ASTME162; with primer and noncorrosive substrate cleaner recommended by foam sealant manufacturer.

PART 3 EXECUTION

3.01 EXAMINATION

A. Examine substrates, areas, and conditions, with Installer present, for compliance with requirements and other conditions affecting performance.

1. Verify that substrates are sound and free of oil, grease, dirt, excess mortar, or other contaminants.

2. Verify that concrete has cured and aged for minimum time period recommended by air barrier manufacturer.

3. Verify that concrete is visibly dry and free of moisture. Test for capillary moisture by plastic sheet method according to ASTM D4263.

4. Verify that masonry joints are flush and completely filled with mortar.

5. Proceed with installation only after unsatisfactory conditions have been corrected.

3.02 SURFACE PREPARATION

A. Clean, prepare, treat, and seal substrate according to manufacturer's written instructions. Provide clean, dust-free, and dry substrate for air barrier application.

B. Mask off adjoining surfaces not covered by air barrier to prevent spillage and overspray affecting other construction.

C. Remove grease, oil, bitumen, form-release agents, paints, curing compounds, and other penetrating contaminants or film-forming coatings from concrete.

D. Remove fins, ridges, mortar, and other projections and fill honeycomb, aggregate pockets, holes, and other voids in concrete with substrate patching membrane.

E. Remove excess mortar from masonry ties, shelf angles, and other obstructions.

F. At changes in substrate plane, apply sealant or termination mastic beads at sharp corners and edges to form a smooth transition from one plane to another.

G. Cover gaps in substrate plane and form a smooth transition from one substrate plane to another as recommended by the manufacturer to provide continuous support for air barrier.

H. Prime substrates as recommended by air barrier manufacturer.

3.03 JOINT TREATMENT

A. Concrete and Masonry: Fill small voids and cracks up to 1/8" with substrate patching membrane. Prepare, treat, rout, and fill joints and cracks in substrate greater than 1/4" in according to ASTMC1193 and air barrier manufacturer's written instructions. Remove dust and dirt from joints and cracks complying with ASTMD4258 before coating surfaces.

1. Prime substrate and apply a single thickness of substrate patching membrane extending a minimum of 3" along each side of joints and cracks. Apply a double thickness of air barrier membrane and embed a joint reinforcing strip in preparation coat.

B. Gypsum Sheathing: Fill joints greater than 1/4" with sealant according to ASTMC1193 and with air barrier manufacturer's written instructions. Apply first layer of fluid air barrier membrane at joints. Tape joints with joint reinforcing strip after first layer is dry. Apply a second layer of fluid air barrier membrane over joint reinforcing strip.

3.04 TRANSITION STRIP INSTALLATION

A. Install strips, transition strips, and auxiliary materials according to air barrier manufacturer's written instructions to form a seal with adjacent construction and maintain a continuous air barrier.

1. Coordinate the installation of air barrier with installation of roofing membrane and base flashing to ensure continuity of air barrier with roofing membrane.

2. Install modified bituminous strip on roofing membrane or base flashing so that a minimum of 3" of coverage is achieved over both substrates.

B. Apply primer to substrates at required rate and allow to dry. Limit priming to areas that will be covered by air barrier sheet in same day. Re-prime areas exposed for more than 24 hours.

1. Prime glass-fiber-surfaced gypsum sheathing with number of prime coats needed to achieve required bond, with adequate drying time between coats.

C. Connect and seal exterior wall air barrier membrane continuously to roofing membrane air barrier, concrete below-grade structures, floor-to floor construction, exterior glazing and window systems, glazed curtain-wall systems, storefront systems, exterior louvers, exterior door framing, and other construction used in exterior wall openings, using accessory materials.

D. At end of each working day, seal top edge of strips and transition strips to substrate with termination mastic.

E. Apply joint sealants forming part of air barrier system within manufacturer's recommended application temperature ranges. Consult manufacturer when sealant cannot be applied within these temperature ranges.

F. Wall Openings: Prime concealed perimeter frame surfaces of windows, curtain walls, storefronts, and doors and apply corner reinforcing according to air barrier manufacturer's written instructions.

1. Modified Bituminous Transition Strip: Roll firmly to enhance adhesion.

G. Fill gaps in perimeter frame surfaces of windows, curtain walls, storefronts, and doors, and miscellaneous penetrations of air barrier membrane with foam sealant.

H. Seal strips and transition strips around masonry reinforcing or ties and penetrations with termination mastic.

I. Seal top of through-wall flashings to air barrier with an additional 6" wide, counter flashing strip.

J. Seal exposed edges of strips at seams, cuts, penetrations, and terminations not concealed by metal counter flashings or ending in reglets with termination mastic.

K. Repair punctures, voids, and deficient lapped seams in strips and transition strips. Slit and flatten fishmouths and blisters. Patch with transition strips extending 6" beyond repaired areas in strip direction.

3.05 AIR BARRIER MEMBRANE INSTALLATION

A. Apply air barrier membrane to form a seal with strips and transition strips and to achieve a continuous air barrier according to air barrier manufacturer's written instructions.

B. Apply air barrier membrane within manufacturer's recommended application temperature ranges.

C. Retain one or both paragraphs and subparagraphs below if priming of substrates is required; verify requirements with manufacturer.

D. Apply primer, as required, to substrates at required rate and allow to dry. Limit priming to areas that will be covered by air barrier sheet in same day. Reprime areas exposed for more than 24 hours.

1. Prime glass-fiber-surfaced gypsum sheathing with number of prime coats needed to achieve required bond, with adequate drying time between coats.

E. Apply a continuous unbroken air barrier to substrates according to the following minimum thickness. Apply membrane in full contact around protrusions such as masonry ties.

1. Vapor-Permeable Membrane Air Barrier: 44-mil wet/25-mil minimum dry film thickness.

F. Apply counter flashing and transition strips according to air barrier manufacturer's written instructions.

G. Do not cover air barrier until it has been inspected by air barrier manufacturer’s representative.

H. Correct deficiencies in or remove air barrier that does not comply with requirements; repair substrates and reapply air barrier components.

3.06 FIELD QUALITY CONTROL

A. Testing Agency: Owner will engage a qualified testing agency to perform tests and inspections and prepare test reports.

B. Inspections: Air barrier materials and installation are subject to inspection for compliance with requirements. Inspections may include the following:

1. Continuity of air barrier system has been achieved throughout the building envelope with no gaps or holes.

2. Continuous structural support of air barrier system has been provided.

3. Masonry and concrete surfaces are smooth, clean and free of cavities, protrusions, and mortar droppings.

4. Site conditions for application temperature and dryness of substrates have been maintained.

5. Maximum exposure time of materials to UV deterioration has not been exceeded.

6. Surfaces have been primed, if applicable.

7. Laps in strips and transition strips have complied with minimum requirements and have been shingled in the correct direction (or mastic has been applied on exposed edges), with no fish mouths.

8. Termination mastic has been applied on cut edges.

9. Strips and transition strips have been firmly adhered to substrate.

10. Compatible materials have been used.

11. Transitions at changes in direction and structural support at gaps have been provided.

12. Connections between assemblies (membrane and sealants) have complied with requirements for cleanliness, preparation and priming of surfaces, structural support, integrity, and continuity of seal.

13. All penetrations have been sealed.

C. Tests: Testing to be performed will be determined by Owner's testing agency from among the following tests:

1. Quantitative Air Leakage Testing: Testing not to exceed the test pressure differential, positive and negative, indicated in "Performance Requirements" Article for air barrier assembly air leakage according to ASTME2357.

D. Remove and replace deficient air barrier components and retest as specified above.

3.07 CLEANING AND PROTECTION

A. Protect air barrier system from damage during application and remainder of construction period, according to manufacturer's written instructions.

1. Protect air barrier from exposure to UV light and harmful weather exposure as required by manufacturer. Remove and replace air barrier exposed for more than 30 days.

2. Protect air barrier from contact with creosote, uncured coal-tar products and sealants not approved by air barrier manufacturer.

B. Clean spills, stains, and soiling from construction that would be exposed in the completed work using cleaning agents and procedures recommended by manufacturer of affected construction.

C. Remove masking materials after installation.

END OF SECTION

SECTION 07210

BUILDING INSULATION

PART 1 GENERAL

1.01 RELATED DOCUMENTS

A. Drawings and general provisions of the Contract, including General Conditions and Division 1 Specification Sections, apply to this Section.

1.01 SUMMARY

A. This Section includes the following:

1. Foundation wall insulation (supporting backfill)
2. Concealed building insulation
3. Exterior Continuous Insulation (outboard of the sheathing)
4. Roof Insulation

B. Related Sections: The following Sections contain requirements that relate to this Section:

1. Section 04200 - Unit Masonry (for cavity wall insulation)

1.02 SUBMITTALS

A. General: Submit each item in this Article according to the Conditions of the Contract and Division 1 Specification Sections.

B. Product Data for each type of insulation product specified.

1.03 DELIVERY, STORAGE, AND HANDLING

A. Protect insulation materials from physical damage and from deterioration by moisture, soiling, and other sources. Store inside and in a dry location. Comply with manufacturer's written instructions for handling, storing, and protecting during installation.

1.04 CODES AND STANDARDS

A. Foam Plastic Insulation shall meet AFPC requirements as follows: AFPC V2 717.1.2, 717.2, 717.4.1.3, 717.4.1.4, 717.4.1.5.

B. Insulating materials concealed as installed shall have a flame spread rating of not more than 75 and a smoke developed rating of not more than 450. [AFPC V2 719.2.1] Insulating materials exposed as installed shall have a flame spread rating of not more than 25 and a smoke developed rating of not more than 450 [AFPC V2 719.3].

PART 2 PRODUCTS

2.01 INSULATING MATERIALS

A. General: Provide insulating materials that comply with requirements and with referenced standards.

1. Preformed Units: Sizes to fit applications indicated; selected from manufacturer's standard thicknesses, widths, and lengths.

B. Extruded-Polystyrene Board Insulation: Rigid, cellular polystyrene thermal insulation formed from polystyrene base resin by an extrusion process using hydrochlorofluorocarbons as blowing agent to comply with ASTM C 578 for type and with other requirements indicated below:

1. Perimeter Insulation: Install in thickness referenced where shown on Drawings, including but not limited to, the outside face of all perimeter walls below grade.

C. Exterior Continuous Insulation: Owens-Corning FOAMULAR 250 - Rigid, cellular, polystyrene, thermal insulation with closed cells and integral high-density skin, formed by the expansion of polystyrene base resin in an extrusion process to comply with ASTM C 578, Type IV; in manufacturer’s standard lengths and widths; and in thicknesses indicated.

D. Roof Insulation: Atlas Energy Products AC Foam II or equal.

2.02 AUXILIARY INSULATING MATERIALS

A. Adhesive for Bonding Insulation: Product with demonstrated capability to bond insulation securely to substrates indicated without damaging insulation and substrates.

B. Roof Insulation Hardware: Product approved by the insulation manufacturer for securing foam roof insulation to metal decking.

PART 3 EXECUTION

3.01 EXAMINATION

A. Examine substrates and conditions, with Installer present, for compliance with requirements of Sections in which substrates and related work are specified and to determine if other conditions affecting performance of insulation are satisfactory. Do not proceed with installation until unsatisfactory conditions have been corrected.

3.02 PREPARATION

A. Clean substrates of substances harmful to insulations or vapor retarders, including removing projections capable of puncturing vapor retarders or that interfere with insulation attachment.

3.03 INSTALLATION, GENERAL

A. Comply with insulation manufacturer's written instructions applicable to products and application indicated.

B. Install insulation that is undamaged, dry, unsoiled, and has not been exposed at any time to ice and snow.

C. Extend insulation in thickness indicated to envelop entire area to be insulated. Cut and fit tightly around obstructions and fill voids with insulation. Remove projections that interfere with placement.

3.04 INSTALLATION OF GENERAL BUILDING INSULATION

A. Apply insulation units to substrates by method indicated, complying with manufacturer's written instructions. If no specific method is indicated, bond units to substrate with adhesive or use mechanical anchorage to provide permanent placement and support of units.

B. Seal joints between closed-cell (non-breathing) insulation units by applying adhesive, mastic, or sealant to edges of each unit to form a tight seal as units are shoved into place. Fill voids in completed installation with adhesive, mastic, or sealant as recommended by insulation manufacturer.

3.05 PROTECTION

A. General: Protect installed insulation from damage due to harmful weather exposures, physical abuse, and other causes. Provide temporary coverings or enclosures where insulation is subject to abuse and cannot be concealed and protected by permanent construction immediately after installation.

END OF SECTION

THIS PAGE INTENTIONALLY LEFT BLANK

SECTION 07552

MODIFIED BITUMEN ROOFING

PART 1 GENERAL

1.01 DESCRIPTION

A. Furnish all material, labor, and equipment necessary for installation of a modified bitumen, torch adhesive applied, sheet roof system. Include installation of roof penetrations furnished by others.

1.02 WORK SPECIFIED ELSEWHERE

A. Roof construction ready to receive finished roofing.

B. Wood blocking at openings through roof and at roof edges.

C. Sheet metal work including metal flashing and counter flashing, and pitch pockets.

D. Cap flashing of vent stacks or other pipes passing through roof.

1.03 RELATED SECTIONS

A. Section 05310 – Metal Decking

B. Section 07600 – Flashing and Sheet Metal Work

1.04 SUBMITTALS

A. Submit a complete list of materials to be used together with manufacturer's printed technical data and installation instructions for the roofing system.

B. Submit two copies of "Roofing Warranty" in form and content indicated by printed form attached to this Section, covering roofing and associated work indicated therein, signed by Installer. Provide two-year roofing warranty period, starting on the date of substantial completion of roofing work. Contractor shall countersign roofing warranty. Sixty days prior to expiration, the Installer shall examine the roof and furnish a written inspection report to the Owner.

1.05 QUALITY ASSURANCE

A. Installer's Qualifications: Installers specializing in modified bitumen, torch applied, sheet roofing system application familiar with the specified requirements and methods needed for proper performance of the work of this section. Installer shall be approved by the roof materials manufacturer and be a licensed applicator of one of the specified systems prior to the bidding of this project, and have successfully completed a minimum of three projects equal in size and scope to the project specified herein.

B. Agency Approvals: The proposed roof system shall conform to the following requirements. No other testing agency approvals will be accepted.

1. Underwriters Laboratories Class A acceptance of the proposed roofing system (including mopping asphalt or cold adhesive) without additional requirements for gravel or coatings.

2. The roof membrane system shall meet the approval requirements of the U.S. EPA Energy Star program.

1.06 PRE-ROOFING CONFERENCE

A. All parties concerned with the built-up roofing and associated work, including roofing installer, installers of deck or substrate construction to receive roofing work, installer of other work in and around roofing which must precede or follow roofing work, and other representatives directly concerned with performance of the work including representatives of roofing and substrate manufacturers, Architect and Owner. Meeting will be coordinated by the General Contractor on a date approved by Architect. Architect will record discussions of conference and decisions and agreements reached and furnish copies to each party attending. Review foreseeable methods and procedures to roofing work including but not necessarily limited to the following:

1. Review roofing system requirements (drawings, specifications and other contract documents).

2. Review required submittals, both completed and yet to be completed.

3. Review status of substrate work (not by roofing installer), structural loading limitations and similar considerations.

4. Review availability of materials, tradesmen, equipment and facilities needed to make progress and avoid delays.

5. Review required inspection, testing, certifying and material usage accounting procedures.

6. Review weather and forecasted weather conditions, and procedures for coping with unfavorable conditions including possibility of temporary roofing.

7. Review procedures needed for protection of roofing during remainder of construction period.

8. Consider each party's expert advice and judgment as expressed in the interest of successful completion of the work.

B. Prepare change orders for work agreed upon (in pre-roofing conference) which is not in accordance with project requirements (Contract Documents). Record in change order reasons for changes and note names of parties disagreeing with changes, if any.

1.07 DELIVERY, STORAGE AND HANDLING OF MATERIALS

A. Delivery:

1. No materials are to be delivered to the site prior to approval of the materials submitted by the Architect.

2. Deliver materials in manufacturer's original containers, dry, undamaged, seals and labels intact.

B. Storage: Storage of sheet materials (roll goods) and all insulation shall be subject to the following requirements:

1. If within fifty miles of contractor's warehouse: All sheet materials (roll goods), insulation, etc., shall be trucked to the job site daily from enclosed warehouse storage.

2. All other storage shall conform to the following:

a. Enclosed trailer, van or truck storage on the job site.

b. Canvas (no plastic sheeting is acceptable) tarpaulins, with material on wooden pallets, 6 inches minimum above ground, secured by ropes, top and sides of all material protected from moisture and rain.

1.08 PREPARATION OF SUBSTRATE

A. The Installer must examine the substrate and the conditions under which roofing work is to be performed, and notify the Contractor in writing of unsatisfactory conditions. Do not proceed with the work until unsatisfactory conditions have been corrected in a manner acceptable to the Installer.

1.10 GUARANTEE

A. Furnish manufacturer's standard roof membrane guarantee for a term of *twenty (20)* years. Guarantee shall be submitted to the Architect on the manufacturer's standard form, signed by a corporate officer. Provide joint warranty for roof.

B. Provide Installer's (Roofing Contractor) 2-year roof guarantee to repair or replace defective roofing material and/or workmanship to keep roof system free of leaks or defects for two years from date of final acceptance.

1.11 JOB CONDITIONS

A. Proceed with roofing work only when weather conditions are in compliance with manufacturer's recommended limitations, and when conditions will permit the work to proceed in accordance with requirements and the manufacturer's recommendations.

B. Coordinate installation of roofing materials and associated work so as to provide a complete system complying with combined recommendations of manufacturers and installers involved in the work.

C. Protect other work from spillage of roofing materials, and prevent liquid materials from entering and clogging drains. Replace or restore other work which is soiled or otherwise damaged by performance of roofing and associated work.

PART 2 PRODUCTS

2.01 MATERIALS

A. Provide and install complete Siplast roof system 2030 FR CBT, or equal.

B. Asphalt coated Base Sheet: Siplast Parabase FS.

C. Modified Bitumen Roof Sheets: Siplast Paradiene 20 TG.
D. Cap Sheet: Siplast Paradiene 30FR TG

E. Cant Strips: Permalite Cant Strips, or equal, of rigid Pereline board by International Permalite Inc.

F. Base Flashing: aluminum clad asphalt elastomer glass-reinforced sheet of 90 lbs. per square minimum weight, Type Veral.

G. Asphalt to be Turmbull Type IV, or equal.

H. Insulation: Atlas Energy Products AC Foam II, or equal.

2.02 ACCEPTABLE SUBSTITUTES

A. Johns Manville DynaWeld 1805 Base Sheet / DynaWeld Cap 250.

B. TAMKO Roofing Products, Inc., Awaplan Versa Smooth/Awaplan Heat Welded Cap.

PART 3 EXECUTION

3.01 INSTALLATION

A. Base Sheet Securement to Prepared Substrate (light weight concrete): Lay the base sheet over the entire area to be roofed, lapping sides 3" and ends 6". Using the specified fasteners, fasten each sheet every 9" through laps and stagger fasteners the remainder of the sheet in two rows on nominal 12" centers with fasteners in each row on 12" centers. Increase the fastening pattern by 70% at the perimeter of the roof and 160% in the corners.

3.02 INSPECTION

A. The manufacturer's recommended installation procedures become the basis for inspecting and accepting or rejecting actual installation.

B. Provide safe access to the roof for proper inspection by the Owner and/or Engineer. Keep the Engineer informed of the status of the project and schedule for completion.

C. Roof Tests, Roof Cuts:

1. Roof cuts will be made only when considered absolutely necessary to determine compliance with specifications.

2. When necessary, cut test samples of installed roofing as directed by the Engineer. Immediately repair roof to conform to adjacent construction without cost to the Owner.

D. In the event that analysis of test samples or inspection indicates that the roofing system, or a portion thereof, does not conform to the specifications, and approved submittals, such defective work shall be corrected by removal and/or replacement, at no cost to the Owner.

E. Coordinate all roofing activities with the Installer's representative(s) designated at the Pre-Installation Conference.

F. Installer's Representative:

1. The installer shall designate a representative who will be responsible for, and follow the application of, all roofing work from start to finish.

2. The Installer's representative shall attend the Pre-Installation Conference and be informed of the scope of the work and procedures for all corrective work.

3. The Installer's representative shall have a complete set of drawings and specifications on the job at all times.

3.03 PROTECTION AND CLEAN-UP OF ROOFTOP, BUILDING AND GROUNDS

A. Rooftop Protection and Clean-up:

1. Protect roof surfaces over which work is to be performed.

2. Exercise care and caution that roofing materials placed on rooftop do not overload structure, damage decking or rooftop equipment.

3. Take care to prevent bitumen and debris from running into and clogging roof drains and water conductors. Remove trash and debris promptly.

4. Schedule work in order not to track over and damage newly installed roofing in place. If absolutely necessary to cross a newly applied roof area, or existing roof, coordinate exact procedures with Architect.

5. The Installer shall be responsible for all damage to any related items to his trade and will be responsible for the cleaning and repair or replacement of any such items.

B. Building Protection and Clean-up:

1. Properly and efficiently protect building and work of other trades from damage by roofing materials during the performance of the work.

2. The Installer shall protect building walls and other surfaces from disfiguration by bitumen stains, runs or spillage, etc., and the Installer shall bear the labor and material cost of repair of these surfaces damaged by the roofing installer's work.

C. Grounds Protection and Clean-up:

1. Coordinate access, parking, storage of materials and equipment on the grounds with the Architect designated at the Pre-Installation Conference.

2. Protect the grounds, lawn, landscaping, shrubbery, etc., from abuse and damage during the roofing work.

3. Remove trash, debris, wrapping, etc., promptly and clean up daily around the job.

4. The Installer shall be responsible for removing all equipment and surplus material from the grounds prior to final acceptance of the work. Installer shall leave his portion of the work, as specified, clean and in complete order. Upon final completion, the grounds shall be cleaned of all trash, debris, bitumen, lumber, scraps, etc., and the grounds raked to its previous condition.

3.04 "PHASED CONSTRUCTION"

A. The Installer shall not "phase" the application of the modified bitumen, torch applied, sheet roofing system. All roof system components shall be applied consecutively as recommended by the manufacturer (within the limit of a day's work), and be weathertight so that in the event of inclement weather no damage will occur to the roof components or interior contents of the building.

3.05 SCHEDULING OF WORK

A. The Installer shall schedule this work in such a manner as to cause no disruption in the use of the building.

B. The building shall be maintained weatherproof at all times. The Installer shall schedule and regulate all activities in order to complete each day's work in a weathertight condition.

C. The Installer's representative shall keep the Owner and Engineer informed of his schedules and procedures for the project.

D. The Installer shall schedule work so as to not be moving over, or hauling equipment over, finished areas of new work.

3.06 WEATHER LIMITATIONS

A. Installer is cautioned to proceed with roofing and related work only when weather conditions will permit. Proceed with roofing only when the roofing system can be installed without "phasing" construction.

3.07 USE OF POWER-DRIVEN EQUIPMENT

A. The Roofing Installer shall exercise good judgment in the use of all power driven or heavy equipment to prevent any damage to the roof system or interior of the building.

3.08 FIRE AND SAFETY PROTECTION EQUIPMENT

A. Installer shall provide all necessary equipment, barricades, and flagging to protect the building occupants and workmen performing the work as mutually agreed upon with the Architect during set-up. All equipment and work areas, ladders, scaffolding, and vehicles used in debris removal, shall be flagged or barricaded around.

B. Installer shall have a working fire extinguisher on the roof with each workman using a propane torch and on the ground at the portable asphalt kettle.

3.09 APPLICATION

A. Modified Bitumen, Torch Applied, Sheet Roofing: Install in accordance with the approved roofing materials manufacturer's latest published manual for the slope and type of substrate indicated.

B. Base Flashing: Install base flashing at all curbs, other vertical surfaces, where indicated, and as required to complete the installation in accordance with roofing materials manufacturer's specifications for the guarantee period required and as applicable for the indicated conditions.

C. Accessories: Furnish and install all accessories as required to complete the roofing, flashing, and insulation systems, in accordance with the manufacturer's requirements and as specified.

D. Water Cut-Offs: Provide water cut-offs at end of day's work and whenever rain or snow is imminent, at exposed edges of roof insulation. Where insulation is installed over metal decks, block flutes as required to prevent water from running under insulation. Remove water cut-offs before continuing with the installation of the roof insulation system.

E. Roof Metal Work: Roofing Installer shall be responsible for the proper attachment of specified work to any roofing metal that is embedded in, or in contact with, and becomes an integral part of the specified roofing system.

F. Embedded Items: Install or flash all embedded items, or items in contact with the roof system, such as, but not limited to:

1. Pre-fabricated curbs for fans, etc.

2. Lead jacks. At existing roofs, remove and replace with new material.

3. Roof drains, scuppers, overflow/emergency roof drains.

4. Flashing and/or pitch pans as required for mechanical equipment, electrical conduits, etc., which pass through roof system. At existing roofs, remove old flashings and replace with new flashings.

5. Metal counterflashing, metal cap flashing.

6. Perimeter fascia metal.

7. Mechanical rooftop equipment.

3.10 ROOF DRAIN FLASHING

A. Drain installation shall be pre-flashed over the glass base membrane with overlapping 1/2 sections of full roll width modified bitumen material, installed by torch method, prior to installation of the field membrane.

B. All roof drains shall be flashed, clamp rings installed and strainers set back in place, as in total completion and the day the surrounding roof membrane is installed.

C. No later, next day, or end of the job membrane detailing will be acceptable. Re-flash all drains as recommended by the manufacturer furnishing materials for the project. If lead sheeting is required under clamp rings, it shall be installed.

D. Where applicable, insulation shall be shaped in an 18" radius from the centerline of the drain. Square cut sumps around the drains are not acceptable. Insulation shall be tapered prior to application of the roofing systems. No exceptions.

3.11 INSTALLER'S SIGNS

A. Furnish and install Roof Warranty signs, 10" x 12" min. size made of .040" aluminum painted gloss white with gloss black lettering.

B. Sign shall read: "DO NOT MAKE REPAIRS OR ALTERATIONS TO THIS ROOF" without written approval from the Owner or authorized representative. The roof is maintained until (insert the month and two years after the date of final acceptance) by (insert Contractor's name, address, and telephone number).

C. Permanently post sign where directed by the Owner's Representative(s), prior to submission of and as a condition for final invoice and subsequent payment.

D. Provide one sign per small roof area. Two or more should be installed on larger roof areas generally one near a roof access point.

END OF SECTION

ROOFING WARRANTY

WHEREAS _____

of (Address) _____

herein called the "Roofing Contractor", has performed roofing and associated ("work") on following project:

Owner:_____

Address:_____

Name and Type of Building:_____

Address: _____

Area of Work: _____ Date of Acceptance:

Warranty Period: _____ Date of Expiration:

AND WHEREAS Roofing Contractor has contracted (either directly with Owner or indirectly as a subcontractor) to warrant said work against leaks and faulty or defective materials and workmanship for designated Warranty Period.

NOW THEREFORE Roofing Contractor hereby warrants, subject to terms and conditions herein set forth, that during Warranty Period he will at his own cost and expense, make or cause to be made such repairs to or replacements of said work as are necessary to correct faulty and defective work, and as are necessary to maintain said work in watertight condition.

This Warranty is made subject to the following terms and conditions:

1. Specifically excluded from this Warranty are damages to work and other parts of the building, and to building contents, caused by: a) lightning, windstorm, hailstorm, and other unusual phenomena of the elements; b) fire; c) failure of roofing system substrate including cracking, settlement, excessive deflection, deterioration, and decomposition; d) faulty construction of parapet walls, copings, chimneys, skylights, vents, equipment supports, and other edge conditions and penetrations of the work; e) repeated vapor condensation on bottom of roofing and f) activity on roofing by others including construction contractors, maintenance personnel, other persons, and animals whether authorized or unauthorized by Owner. When work has been damaged by any of foregoing causes, Warranty shall be null and void until such damage has been repaired by Roofing Contractor, and until cost and expense thereof has been paid by Owner or by another responsible party so designated.

2. The Roofing Contractor is responsible for damage to work covered by this Warranty, but is not liable for consequential damages to building or building contents, resulting from leaks or faults or defects of work.

3. During Warranty Period, if Owner allows alterations of work by anyone other than Roofing Contractor, including cutting, patching, and maintenance in connection with penetrations, attachment of other work, and positioning of anything of roof, this Warranty shall become null and void upon date of said

alterations, but only to extent said alterations affect work covered by this Warranty. If Owner engages Roofing Contractor to perform said alterations, Warranty shall not become null and void, unless Roofing Contractor, prior to proceeding with said work, shall have notified Owner in writing, showing reasonable cause for claim that said alterations would likely damage or deteriorate work, thereby reasonably justifying a limitation or termination of this Warranty.

4. During Warranty Period, if original use of roof is changed and it becomes used for, but was not originally specified for, a promenade, work deck, spray cooled surface, flooded basin, or other use or service more severe than originally specified, this Warranty become null and void upon date of said change, but only to extent said change affect work covered by this Warranty.

5. The Owner shall promptly notify Roofing Contractor of observed, known or suspected leaks, defect or deterioration, and shall afford reasonable opportunity for Roofing Contractor to inspect work, and to examine evidence of such leaks, defects or deterioration.

6. This Warranty is recognized to be the only warranty of Roofing Contractor on said work, and shall not operate to restrict or cut off Owner from other remedies and resources lawfully available to him in cases of roofing failure.

IN WITNESS THEREOF, this instrument has been duly executed this

_____ DAY OF _____ 20___

Roofing Contractor:

By: _____

SECTION 07600

FLASHING AND SHEET METAL WORK

PART 1 GENERAL

1.01 DESCRIPTION

A. This Work includes all roof flashing, drips, and sheet metal work adjacent to or incorporated in the roofing and flashing; and miscellaneous sheet metal items shown on Drawings.

1.02 SUBMITTALS

A. Shop drawings showing detailed construction of formed sheet metal to be shop fabricated as specified in Section 01300, Submittals. In addition to dimensions of each piece show metal type and thickness, type of fastener and spacing.

PART 2 PRODUCTS

2.01 MATERIALS

A. Sheet Metal for each item shall be as specified under each heading and as shown on Drawings.

B. Mill Finish Aluminum Sheet: ASTM B 209, 3003-H14, with a minimum thickness of 0.040" to be used at roof flashing.

C. Stainless Steel Sheet: ASTM A 167, Type 304 soft annealed, with No. 2D finish, except where harder temper is required for forming or performance, minimum 0.0187 inch thick. To be used at scuppers, pitch pans, and other roof accessories where soldered joints are required.

D. Solder for Stainless Steel: ASTM B32, Grade Sn60, used with an acid flux of type recommended by stainless steel sheet manufacturer, used a non-corrosive flux over tinned surfaces.

E. Gutters: Install new gutters as shown on the plans.

F. Downspouts: Install new downspouts as shown on the plans.

G. Reglets: Units of type, material, and profile indicated, formed to provide secure interlocking of separate reglet and counterflashing pieces and compatible with flashing indicated.

H. Screws and Rivets - same material as flashing sheet, or other as recommended by manufacturer of flashing sheet.

I. Nails - long enough to penetrate backing at least 1 inch, #12-gauge diameter, flat head, annular thread nails. Use neoprene washers under the heads where exposed to the weather.

J. Cleats - same metal and gage as sheet being anchored unless specified otherwise.

K. Bituminous coating - FS TT-C-494 or SSPC Paint 12, cold applied solvent-type bituminous mastic coating for application in dry film thickness of 15 mils per coat.

L. Sealant - G.E. Co., Silicone – Clear.

2.02 GENERAL

A. Except as otherwise shown or specified, comply with applicable recommendations and details of the "Architectural Sheet Metal Manual" by SMCNA and the manufacturer of the sheet metal being installed.

B. Sheet metal at roof areas where concealed from view and all other sheet metal not exposed to view, shall be aluminum. Where soldered joints are required, stainless steel shall be used. All metal copings at top of parapet walls shall be aluminum.

C. Provide for thermal expansion of flashing and other items exposed for more than 15'-0" continuous length. Maintain a water-tight installation at expansion seams. Locate expansion seams with the following maximum spacings for each general use:

D. Flashing and trim - at 10'-0" intervals and 2'-0" each side of corners and intersections.

E. Fixed joints and seams shall be flat lock seams, soldered, unless otherwise indicated, with minimum of 1/2 inch wide hooked flanges or as approved on the shop drawings.

F. Clean exposed metal surfaces of substances which would interfere with uniform oxidation and weathering.

G. Fabricate and install work with lines and corners of exposed unit true and accurate. Form exposed faces flat and free of buckles, excessive waves and avoidable tool marks. Provide uniform, neat seams with minimum exposure of solder, welds and sealant. Except as otherwise shown, fold back the sheet metal to form a hem on the concealed side of exposed edges.

H. Conceal fasteners and expansion provisions wherever possible in exposed work, and locate so as to minimize the possibility of leakage. Cover and seal work as required for a watertight installation. Provide cleat-type anchorages for metal flashing and trim wherever practical.

I. On vertical surfaces lap 2-piece flashings a minimum of 3 inches. On sloping and flat surfaces lap flashings a minimum of 6 inches. For embedment of metal flashing flanges in roofing extend flanges for a minimum of 4-inch embedment.

J. Separate metal from non-compatible metal or corrosive substrates by coating concealed surfaces at locations of contact with asphalt mastic or other permanent separation as recommended by manufacturer.

2.03 BASEFLASHING & COUNTERFLASHING

A. Baseflashing and counterflashing, receivers shall be fabricated of stainless steel.

2.04 FLASHING

A. Equipment support flashing and roof penetration flashing shall be 0.040-inch-thick mill finish aluminum.

PART 3 EXECUTION

3.01 INSTALLATION OF SHEET METAL

A. Counter-flashing at junction between roof and vertical surfaces shall be two-piece as detailed on Drawings. Hem lower edge of counterflashing and set close to built-up flashing to prevent entrance of windblown water. Flashing shall be in 8-foot lengths, lapped 6 inches at end joints. Make corners tight with special formed and soldered corner pieces.

B. Install scuppers as detailed. Seal joints between sheet metal and adjacent materials.

C. Install other sheet metal flashings and trim as shown on Drawings and including pipe or stack flashing.

D. Separate dissimilar metals by felt or other approved methods.

3.02 MISCELLANEOUS SHEET METAL WORK

A. A. Contractor shall guarantee sheet metal work to be free from defects in materials and workmanship for a period of two years from date of substantial completion of building. Should any leaks or defects occur within the period of guarantee, Contractor shall repair leak or defect immediately upon notification by Owner, at his own expense.

END OF SECTION

THIS PAGE INTENTIONALLY LEFT BLANK

SECTION 07720

ROOF SPECIALTIES AND ACCESSORIES

PART 1 GENERAL

1.01 RELATED DOCUMENTS

A. Drawings and general provisions of the Contract, including General Conditions and Division 1 Specification Sections, apply to this Section.

1.02 DESCRIPTION

A. This section includes all roofing specialties shown on the Drawing such as roof access ladder.

1.03 SUBMITTALS

A. Submit manufacturer's technical product data for each item to be provided under this section as specified in the GENERAL CONDITIONS.

PART 2 PRODUCTS

2.01 MATERIALS

A. Roof Access Ladder

1. Model: Model FLH Aluminum Heavy Duty Fixed Vertical Ladder with parapet platform as manufactured by Precision Ladders, LLC or approved equal.

2. Capacity: Unit shall support a 1,500 lb loading without failure, and individual treads shall withstand a 3,000 lb loading without failure.

3. Performance Standard: Units designed and manufactured to meet or exceed ANSI A14.3, OSHA 1910.23, OSHA 1910.28 and OSHA 1910.29.

4. Ladder Stringer: 3 inch by 1 inch by 1/8 inch extruded 6005-T5 aluminum tubing. Pitch: 90 degrees.

5. Ladder Tread: 2-1/4 inch by 3/4 inch by 1/4 inch extruded 6005-T5 aluminum with deeply serrated top surface.

6. Ladder Mounting Bracket: 8-1/2 inch by 2 inch by 3 inch by 1/4-inch-thick aluminum angle.

7. Fall Arrest System: Complete system with rail, sleeves, and harness to limit any fall to 6 inches.

8. Walk-Thru:

a. Handrails: 1-1/4 inch aluminum square tube with rounded edges

b. Side Rails: 42 inch side rail extension for through ladder exits

9. Rest Platform:

a. Bar grating

b. Platform Size: 30 inches by 48 inches standard

c. Toe Boards. 6005 T-5 aluminum

d. Handrails: 1-1/4 inch aluminum square tube 42 inches high

e. Security Gate: Hinged gate at bottom of cage with padlock provision

f. Floor Brackets: Floor bracket at foot of each stringer, 3 by 2 by 1/4 inch

10. Finishes:

a. Standard: Powder coated with the color selected by the Owner from the Manufacturer's standard colors.

PART 3 EXECUTION-NOT USED

END OF SECTION

SECTION 07840

FIRESTOPPING

PART 1 – GENERAL

1.01 RELATED DOCUMENTS

A. Drawings and general provisions of the Contract, including General and Supplementary Conditions and Division 1 Specification Sections, apply to this Section.

1.02 SUMMARY

A. This section includes firestopping for through-penetrations and joints in or between the following fire-resistance rated assemblies, including both blank openings, linear openings, and openings containing penetrating items:

1. Floor-ceiling assemblies
2. Roof-ceiling assemblies
3. Walls and partitions
4. Smoke barriers
5. Construction enclosing compartmentalized areas

B. Related Sections include the following:

1. Section 03300 – Cast-In-Place Concrete
2. Section 07210 – Building Insulation
3. Division 16 – Electrical

1.03 PERFORMANCE CRITERIA

A. FIRE TEST REQUIREMENTS

1. Underwriters Laboratories, Inc. (UL), latest edition:

a. UL1479 Fire Tests of Through Penetration Firestops

b. UL2079 Tests for Fire Resistance of Building Joint Systems

c. UL263 Fire Tests of Building Construction and Materials

d. UL723 Surface Burning Characteristics of Building Materials

2. American Society of Testing and Materials (ASTM), latest edition:

a. ASTM E814 Fire Tests of Penetration Fire Stops

b. ASTM E1966 Test Method for Fire Resistive Joint Systems

c. ASTM E119 Fire Tests of Building Construction and Materials

d. ASTM E84 Surface Burning Characteristics of Building Materials

e. ASTM E2307 Fire Tests of Perimeter Fire Barrier Systems Using Intermediate Scale, Multi-Story Test Apparatus

f. ASTM E2837 Determining the Fire Resistance of Continuity Head-of-Wall Joint Systems Installed Between Rated Wall Assemblies and Nonrated Horizontal Assemblies

g. ASTM E2174 Standard Practice for On Site Inspection of Installed Fire Stops

h. ASTM E2393 Standard Practice for On Site Inspection of Installed Fire Resistive Joint Systems and Perimeter Fire Barriers

B. REFERENCES

1. Underwriters Laboratories (UL) of Northbrook, IL "Fire Resistance Directory"

   a. Through Penetration Firestop Systems (XHEZ)
   b. Joint Systems (XHBN)
   c. Perimeter Fire Containment Systems (XHDG)
   d. Continuity Head-of-Wall Joint Systems (XHBO)
   e. Fill, Void or Cavity Materials (XHHW)
   f. Firestop Devices (XHJI)
   g. Forming Materials (XHKU)
   h. Wall Opening Protective Materials (CLIV)

2. All major building codes:

   a. International Building Code published by ICC

3. National Fire Protection Association (NFPA) of Quincy, MA "NFPA 101: Life Safety Code"

4. National Fire Protection Association (NFPA) of Quincy, MA "NFPA 70: National Electrical Code"

5. Factory Mutual Approvals (FM) of Norwood, MA "FM 4991: Standard for Approval of Firestop Contractors"

6. Underwriters Laboratories (UL) of Northbrook, IL "UL Qualified Firestop Contractor Program"

C. PERFORMANCE REQUIREMENTS

1. Provide products that upon curing do not re-emulsify, dissolve, leach, breakdown, or otherwise deteriorate over time from exposure to atmospheric moisture, sweating pipes, ponding water or other forms of moisture characteristic during and after construction.

2. When intumescent products are used, provide products that do not contain sodium silicate or any other water-soluble intumescent ingredient in the formulation.

3. Provide firestop products that do not contain ethylene glycol.

4. Provide firestop sealants sufficiently flexible to accommodate motion such as pipe vibration, water hammer, thermal expansion and other normal building movement without damage to the seal.

5. Pipe insulation shall not be removed, cut away or otherwise interrupted through wall or floor openings. Provide products appropriately tested for the thickness and type of insulation utilized.

6. Fire rated pathway devices shall be the preferred product and shall be installed in all locations where frequent cable moves, add-ons and changes will occur. Such devices shall be:

    a. Capable of retrofit around existing cables

    b. Designed such that two or more devices can be ganged together

    c. Maintenance free such that no action is required to activate the smoke and fire sealing mechanism

7. When mechanical cable pathways are not practical, openings within walls and floors designed to accommodate voice, data and video cabling shall be provided with re-enterable products specifically designed for retrofit.

8. Provide fire-resistive joint sealants sufficiently flexible to accommodate movement such as thermal expansion and other normal building movement without damage to the seal.

9. Provide fire-resistive joint sealants designed to accommodate a specific range of movement and tested for this purpose in accordance with a cyclic movement test criteria as outlined in Standards, ASTM E1966, or ANSI/ UL 2079.

10. Provide penetration firestop systems, fire-resistive joint systems, or perimeter fire barrier systems subjected to an air leakage test conducted in accordance with Standard, ANSI/ UL1479 for penetrations and ANSI/UL2079 for joint systems with published L-Ratings for ambient and elevated temperatures as evidence of the ability of firestop system to restrict the movement of smoke.

11. Provide T-Rating Collar Devices tested in accordance with ASTM E814 or ANSI/UL1479 for metallic pipe penetrations requiring T-Ratings per the applicable building code.

12. Provide a fire-rated grommet for all individual or small grouped cable applications up to 0.53 in. (14 mm).

13. Provide moisture-curing products where inclement weather or greater than transient water exposure is expected.

1.04 SUBMITTALS

A. Product Data: For each type of firestopping product indicated.

B. System Drawings: Submit documentation from a qualified third-party testing agency that is applicable to each firestopping system configuration for construction, joint opening width and/or penetrating items.

C. Product Certificates: Certificate of conformance signed by manufacturers of firestopping products certifying that products comply with requirements.

1.05 QUALITY ASSURANCE

A. Provide firestopping systems that comply with the following requirements and those specified in "Performance Criteria" Article:

1. Firestopping tests are performed by a qualified, testing and inspection agency. A qualified testing and inspection agency is UL, or another agency performing testing and follow-up inspection services for firestop systems acceptable to authorities having jurisdiction.

2. Firestopping products bear classification marking of qualified testing and inspection agency.

B. Engage an experienced installer who is certified, licensed, FM Approved in accordance with FM 4991, Certified by UL as a Qualified Contractor, or otherwise qualified by the firestopping manufacturer as having been provided the necessary training to install firestop products per specified requirements. A manufacturer's willingness to sell its firestopping products to Contractor or to an installer engaged by Contractor does not in itself confer qualifications on buyer.

C. Obtain firestop systems for each type of penetration or joint opening and construction condition indicated from a single manufacturer.

D. Conduct conference at Project site to comply with requirements in Division 1 Section "Project Meetings".

1.06 DELIVERY, STORAGE AND HANDLING

A. Deliver firestopping products to Project site in original, unopened containers or packages with intact and legible manufacturer's labels identifying product and manufacturer, date of manufacture; lot number; shelf life, if applicable; qualified testing and inspection agency's classification marking; and mixing instructions for multi-component materials.

B. Store and handle materials for firestopping products to prevent their deterioration or damage due to moisture, temperature changes, contaminants or other causes.

1.07 PROJECT CONDITIONS

A. Do not install firestopping products when ambient or substrate temperatures are outside limitations recommended by manufacturer.

B. Do not install firestopping products when substrates are wet due to rain, frost, condensation, or other causes.

C. Do not use materials that contain flammable solvents.

1.08 COORDINATION

A. Coordinate construction of openings and penetrating items to ensure that through-penetration firestop systems are installed according to specified requirements.

B. Coordinate sizing of sleeves, openings, core-drilled holes or cut openings to accommodate through-penetration firestop systems.

C. Schedule installation of firestopping after completion of penetrating item installation but prior to covering or concealing of openings.

PART 2 PRODUCTS

2.01 FIRESTOPPING, GENERAL

A. Provide firestopping products that are compatible with one another, with the substrates forming openings, and with the items, if any, penetrating through-penetration firestop systems, under conditions of service and application, as demonstrated by firestopping products manufacturer based on testing and field experience.

B. Provide components for each firestopping system that are needed to install fill materials. Use only components specified by the firestopping manufacturer and approved by the qualified testing agency for the designated fire-resistance-rated systems.

2.02 ACCEPTABLE MANUFACTURERS

A. Subject to compliance with through-penetration firestop systems (XHEZ) and/or wall opening protective materials (CLIV) and/or joint systems (XHBN) and/or perimeter fire containment systems (XHDG) and/or continuity head-of-wall joint systems (XHBO) listed in Volume 2 of the UL Fire Resistance Directory, provide products of the following manufacturers as identified below:

1. Acceptable Manufacturer: Specified Technologies Inc., 210 Evans Way, Somerville, NJ 08876. Tel: (800) 992-1180, Fax: (908) 526-9623, Email: specseal@stifirestop.com, Website: www.stifirestop.com.

2. Substitutions: Subject to compliance with requirements, manufacturers offering products that may be incorporated into the Work include, but are not limited to, the following:

   a. A/D Fire Protection Systems Inc.
   b. Hilti, Inc.
   c. Isolatek International
   d. Nelson Firestop Products
   e. 3M Fire Protection Products
   f. Tremco
   g. Single Source: Obtain firestop systems for each type of penetration and construction condition indicated only from a single manufacturer

2.03 MATERIALS

A. General: Use only firestopping products that have been tested for specific fire-resistance-rated construction conditions conforming to construction assembly type, penetrating item type or joint opening width and movement capabilities, annular space requirements, and fire-rating involved for each separate instance.

B. Intumescent Sealants: Single component intumescent latex formulations containing no water-soluble intumescent ingredients capable of expanding a minimum 8 times, the following products are acceptable:

1. Specified Technologies, Inc. (STI) SpecSeal Series SSS Intumescent Sealant
2. Specified Technologies, Inc. (STI) SpecSeal Series LCI Intumescent Sealant

C. Endothermic Sealants: Single component latex formulations that upon cure do not re-emulsify during exposure to moisture, the following products are acceptable:

1. Specified Technologies, Inc. (STI) SpecSeal Series LC Endothermic Sealant

D. Elastomeric Sealants: Single component latex formulations that upon cure do not re-emulsify during exposure to moisture and accommodate minimum ±25 percent movement, the following products are acceptable:

1. Specified Technologies, Inc. (STI) SpecSeal Series AS Elastomeric Spray
2. Specified Technologies, Inc. (STI) SpecSeal Series ES Elastomeric Sealant

E. Firestop Devices: Factory-assembled steel collars lined with intumescent material capable of expanding a minimum 30 times sized to fit specific outside diameter of penetrating item, the following products are acceptable:

1. Specified Technologies, Inc. (STI) SpecSeal Series SSC Firestop Collars
2. Specified Technologies, Inc. (STI) SpecSeal Series LCC Firestop Collars

F. Fire Rated Cable Pathways: Gangable device modules capable of being retrofitted around existing cables and comprised of steel raceway with intumescent foam pads allowing 0 to 100 percent cable fill and requiring no additional action in the form of plugs, twisting closure, putty, pillow, or sealant to achieve fire and leakage ratings, the following products are acceptable:

1. Specified Technologies Inc. (STI) EZ-Path Fire Rated Pathway

G. Wall Opening Protective Materials: Intumescent, non-curing pads or inserts for protection of electrical switch and receptacle boxes to reduce horizontal separation to less than 24" (610 mm), the following products are acceptable:

1. Specified Technologies, Inc. (STI) SpecSeal Series SSP Firestop Putty Pads
2. Specified Technologies, Inc. (STI) SpecSeal Series EP PowerShield Insert Pads

H. Firestop Putty: Intumescent, 100% solids, non-hardening, water resistant, butyl rubber-based putties containing no solvents or silicone compounds, the following products are acceptable:

1. Specified Technologies, Inc. (STI) SpecSeal Series SSP Firestop Putty

I. Wrap Strips: Single component intumescent elastomeric strips faced on both sides with a plastic film and capable of expanding a minimum 30 times, the following products are acceptable:

1. Specified Technologies, Inc. (STI) SpecSeal Series RED2 Wrap Strip
2. Specified Technologies, Inc. (STI) SpecSeal Series BLU2 Wrap Strip

J. Firestop Pillows: Re-enterable, non-curing, mineral fiber core encapsulated with an intumescent coating on all six sides contained in a flame-retardant poly bag, the following products are acceptable:

1. Specified Technologies, Inc. (STI) SpecSeal Series SSB Firestop Pillows

K. Mortar: Portland cement based dry-mix product formulated for mixing with water at Project site to form a non-shrinking, water-resistant, homogenous mortar, the following products are acceptable:

1. Specified Technologies, Inc. (STI) SpecSeal Series SSM Firestop Mortar

L. Silicone Sealants: Moisture curing, single component, silicone elastomeric sealant for horizontal surfaces (pourable or nonsag) or vertical surface (nonsag), the following products are acceptable:

1. Specified Technologies, Inc. (STI) SpecSeal SIL300 Silicone Firestop Sealant

2. Specified Technologies, Inc. (STI) SpecSeal SIL300 SL Self-Leveling Silicone Firestop Sealant'

M. All-Weather Coatings: Moisture curing, single component silicone copolymer elastomeric spray coatings for horizontal surfaces where greater water resistance is required or inclement weather is anticipated, the following products are acceptable:

1. Specified Technologies, Inc. (STI) SpecSeal FT305 Firestop Spray

N. Silicone Foam: Multicomponent, silicone-based liquid elastomers, that when mixed, expand and cure in place to produce a flexible, non-shrinking foam, the following products are acceptable:

1. Specified Technologies, Inc. (STI) Pensil 200 Silicone Foam

O. Composite Sheet: Intumescent material sandwiched between a galvanized steel sheet and steel wire mesh protected with aluminum foil capable of sustaining a minimum 2,500 lbs (1,134 kg) when subjected to load testing, the following products are acceptable:

1. Specified Technologies, Inc. (STI) SpecSeal CS Composite Sheet

P. Cast-In-Place Firestop Device: Single component molded firestop device installed on forms prior to concrete placement with totally encapsulated, tamper-proof integral firestop system and smoke sealing gasket, the following products are acceptable:

1. Specified Technologies, Inc. (STI) SpecSeal CD Cast-In Firestop Device

Q. Fire-Rated HVAC Retaining Angles: Steel angle system with integral intumescent firestop gasket for use on steel HVAC ducts, the following products are acceptable:

1. Specified Technologies, Inc. (STI) SpecSeal FyreFlange Firestop Angles

R. Firestop Plugs: Re-enterable, foam rubber plug impregnated with intumescent material capable of expanding minimum 10 times with expansion beginning at 350°F (177°C) for use in blank openings and cable sleeves, the following products are acceptable:

1. Specified Technologies, Inc. (STI) SpecSeal Series FP Firestop Plug

S. Fire-Rated T Rating Collar Device: Louvered steel collar system with synthetic aluminized polymer coolant wrap installed on metallic pipes where T Ratings are required by applicable building code requirements, the following products are acceptable:

1. Specified Technologies, Inc. (STI) SpecSeal T-Collar Device

T. Fire-Rated Cable Grommet: Molded two-piece grommet made from plenum grade polymer with a foam inner core for sealing cable penetrations up to 0.53 in. (14 mm) diameter, the following products are acceptable:

1. Specified Technologies, Inc. (STI) EZ-Firestop Grommet (RFG1 or RFG2)

U. Fire-Rated Closet Flange Gasket: Molded, single-component, intumescent gasket for use beneath a closet flange in floor applications, the following products are acceptable:

1. Specified Technologies, Inc. (STI) SpecSeal Series CF34 Closet Flange Firestop Gasket

PART 3 EXECUTION

3.01 PREPARATION

A. Examination of Conditions: Examine areas and conditions under which work is to be performed and identify conditions detrimental to proper or timely completion.

B. Surfaces to which firestop materials will be applied shall be free of dirt, grease, oil, scale, laitance, rust, release agents, water repellents, and any other substances that may inhibit optimum adhesion.

C. Provide masking and temporary covering to prevent soiling of adjacent surfaces by firestopping materials.

D. Do not proceed until unsatisfactory conditions have been corrected.

3.02 FIRESTOPPING INSTALLATION

A. General Requirements: Install through-penetration firestop systems and fire-resistive joint systems in accordance with “Performance Criteria” Article and in accordance with the conditions of testing and classification as specified in the published design.

B. Manufacturer’s Instructions: Comply with manufacturer’s instructions for installation of firestopping products.

1. Seal all openings or voids made by penetrations to ensure an air and water-resistant seal.

2. Consult with mechanical engineer, project manager, and damper manufacturer prior to installation of through-penetration firestop systems that might hamper the performance of fire dampers as it pertains to duct work.

3. Protect materials from damage on surfaces subjected to traffic.

4. Apply a suitable bond-breaker to prevent three-sided adhesion in applications where this condition might occur such as the intersection of a gypsum wallboard/steel stud wall to floor or roof assembly where the joint is backed by a steel ceiling runner or track.

5. Where joint application is exposed to the elements, fire-resistive joint sealant must be approved by manufacturer for use in exterior applications and shall comply with ASTM C-920, “Specification for Elastomeric Joint Sealants”.

3.03 FIELD QUALITY CONTROL

A. Inspections: Owner shall engage a qualified independent inspection agency to inspect through-penetration firestop systems in accordance with ASTM E2174, “Standard Practice for On Site Inspection of Installed Fire Stops” or joint systems in accordance with ASTM E2393, “Standard Practice for On Site Inspection of Installed Fire Resistive Joint Systems and Perimeter Fire Barriers”. NOTE: Manufacturers are not qualified inspection agencies, and it is a conflict of interest for the manufacturer to perform inspections of installed firestopping systems according to the aforementioned inspection standards.

B. Keep areas of work accessible until inspection by authorities having jurisdiction.

C. Where deficiencies are found, repair or firestopping products so they comply with requirements.

3.04 ADJUSTING AND CLEANING

A. Remove equipment, materials, and debris leaving area in undamaged, clean condition.

B. Clean all surfaces adjacent to sealed openings to be free of excess firestopping materials and soiling as work progresses.

END OF SECTION

THIS PAGE INTENTIONALLY LEFT BLANK

SECTION 07901

JOINT SEALANTS

PART 1 GENERAL

1.01 RELATED SECTIONS

A. Section 03300 – Cast-In-Place Concrete

1.02 SYSTEM PERFORMANCE REQUIREMENTS

A. Provide elastomeric joint sealants that have been produced and installed to establish and to maintain watertight and airtight continuous seals without causing staining or deterioration of joint substrates.

B. Provide joint sealants for interior applications that have been produced and installed to establish and maintain airtight continuous seals that are water resistant and cause no staining or deterioration of joint substrates.

1.03 REFERENCE STANDARDS

A. ASTM International (ASTM), latest edition:

1. ASTM C1193 Standard Guide for Use of Joint Sealants

1.04 SUBMITTALS

A. General: Submit the following in accordance with Conditions of Contract and Division 1 Specification Sections.

B. Product data from manufacturers for each joint sealant product required.

1.05 QUALITY ASSURANCE

A. Installer Qualifications: Engage an experienced Installer who has completed joint sealant applications similar in material, design, and extent to that indicated for Project that have resulted in construction with a record of successful in-service performance.

1.06 DELIVERY, STORAGE, AND HANDLING

A. Deliver materials to Project site in original unopened containers or bundles with labels indicating manufacturer, product name and designation, color, expiration period for use, pot life, curing time, and mixing instructions for multicomponent materials.

B. Store and handle materials in compliance with manufacturer's recommendations to prevent their deterioration or damage due to moisture, high or low temperatures, contaminants, or other causes.

1.07 PROJECT SITE CONDITIONS

A. Environmental Conditions: Do not proceed with installation of joint sealants when ambient and substrate temperature conditions are outside the limits permitted by joint sealant manufacturer or below 40˚ F and/or when joint substrates are wet.

B. Joint Width Conditions: Do not proceed with installation of joint sealants where joint widths are less than allowed by joint sealant manufacturer for application indicated.

C. Joint Substrate Conditions: Do not proceed with installation of joint sealants until contaminants capable of interfering with their adhesion are removed from joint substrates.

PART 2 PRODUCTS

2.01 MATERIALS, GENERAL

A. Compatibility: Provide joint sealants, joint fillers, and other related materials that are compatible with one another and with joint substrates under conditions of service and application, as demonstrated by sealant manufacturer based on testing and field experience.

2.02 POLYURETHANE JOINT SEALANTS

A. Polyurethane joint sealants for concrete shall be installed in all water vault structures in accordance with sealant manufacturer's recommendations.

2.03 JOINT SEALANT BACKING

A. General: Provide sealant backings of material and type that are nonstaining; are compatible with joint substrates, sealants, primers and other joint fillers; and are approved for applications indicated by sealant manufacturer based on field experience and laboratory testing.

2.04 MISCELLANEOUS MATERIALS

A. Primer: Material recommended by joint sealant manufacturer where required for adhesion of sealant to joint substrates indicated, as determined from preconstruction joint sealant-substrate tests and field tests.

B. Cleaners for Nonporous Surfaces: Chemical cleaners acceptable to manufacturers of sealants and sealant backing materials, free of oily residues or other substances capable of staining or harming in any way joint substrates and adjacent nonporous surfaces and formulated to promote optimum adhesion of sealants with joint substrates.

C. Masking Tape: Nonstaining, nonabsorbent material compatible with joint sealants and surfaces adjacent to joints.

PART 3 EXECUTION

3.01 EXAMINATION

A. Examine joints indicated to receive joint sealants, with Installer present, for compliance with requirements for joint configuration, installation tolerances, and other conditions affecting joint sealant performance. Do not proceed with installation of joint sealants until unsatisfactory conditions have been corrected.

3.02 PREPARATION

A. Surface Cleaning of Joints: Clean out joints immediately before installing joint sealants to comply with recommendations of joint sealant manufacturer and the following requirements:

1. Remove all foreign material from joint substrates that could interfere with adhesion of joint sealant, including dust, paints (except for permanent, protective coatings tested and approved for sealant adhesion and compatibility by sealant manufacturer), old joint sealants, oil, grease, waterproofing, water repellents, water, surface dirt, and frost.

2. Clean concrete, masonry and similar porous joint substrate surfaces by brushing, grinding, blast cleaning, mechanical abrading, or a combination of these methods to produce a clean, sound substrate capable of developing optimum bond with joint sealants. Remove loose particles remaining from above cleaning operations by vacuuming or blowing out joints with oil-free compressed air.

3. Remove laitance and form release agents from concrete.

4. Clean metal, glass, porcelain enamel, glazed surfaces of ceramic tile, and other nonporous surfaces with chemical cleaners or other means that do not stain, harm substrates, or leave residues capable of interfering with adhesion of joint sealants.

B. Joint Priming: Prime joint substrates where indicated or where recommended by joint sealant manufacturer based on preconstruction joint sealant-substrate tests or prior experience. Apply primer to comply with joint sealant manufacturer's recommendations. Confine primers to areas of joint sealant bond; do not allow spillage or migration onto adjoining surfaces.

C. Masking Tape: Use masking tape where required to prevent contact of sealant with adjoining surfaces that otherwise would be permanently stained or damaged by such contact or by cleaning methods required to remove sealant smears. Remove tape immediately after tooling without disturbing joint seal.

3.03 INSTALLATION OF JOINT SEALANTS

A. General: Comply with joint sealant manufacturer's printed installation instructions applicable to products and applications indicated, except where more stringent requirements apply.

B. Sealant Installation Standard: Comply with recommendations of ASTM C1193 for use of joint sealants as applicable to materials, applications, and conditions indicated.

C. Installation of Sealant Backings: Install sealant backings to comply with the following requirements:

1. Install joint fillers of type indicated to provide support of sealants during application and at position required to produce the cross-sectional shapes and depths of installed sealants relative to joint widths that allow optimum sealant movement capability.

2. Install bond breaker tape between sealants where backer rods are not used between sealants and joint fillers or back of joints.

D. Installation of Sealants: Install sealants by proven techniques that result in sealants directly contacting and fully wetting joint substrates, completely filling recesses provided for each joint configuration, and providing uniform, cross-sectional shapes and depths relative to joint widths that allow optimum sealant movement capability. Install sealants at the same time sealant backings are installed. Fill joints to a depth equal to 50 percent (50%) of joint width, but never more than 1/2-inch deep or less than 1/4-inch deep. Remainder of joint shall be filled with backer material.

E. Tooling of Nonsag Sealants: Immediately after sealant application and prior to time skinning or curing begins, tool sealants to form smooth, uniform beads of configuration indicated, to eliminate air pockets, and to ensure contact and adhesion of sealant with sides of joint. Remove excess sealants from surfaces adjacent to joint. Do not use tooling agents that discolor sealants or adjacent surfaces or are not approved by sealant manufacturer.

3.04 CLEANING

A. Clean off excess sealants or sealant smears adjacent to joints as work progresses by methods and with cleaning materials approved by manufacturers of joint sealants and of products in which joints occur.

3.05 PROTECTION

A. Protect joint sealants during and after curing period from contact with contaminating substances or from damage resulting from construction operations or other causes so that they are without deterioration or damage at time of Substantial Completion. If, despite such protection, damage or deterioration occurs, cut out and remove damaged or deteriorated joint sealants immediately so that installations with repaired areas are indistinguishable from original work.

END OF SECTION

SECTION 08331

OVERHEAD COILING DOORS

PART 1 GENERAL

1.01 SCOPE OF WORK

A. Furnish all labor, materials, equipment, and incidentals required to install all overhead coiling (rolling) doors as shown on the Drawings and specified herein.

1.02 RELATED SECTIONS

A. Division 16 – Electrical

1.03 SUBMITTALS

A. Submit to the Engineer for review, as provided in Section 01300, Submittals complete shop drawings, working drawings, and product data including dimensions, locations, materials, door guides, finish, and details of construction, erection, and operation of all service doors.

1.04 DELIVERY, STORAGE AND HANDLING

A. Deliver materials in manufacturers' original unopened and undamaged packages with labels legible and intact. Store materials in unopened packages in a manner to prevent damage from the environment and construction operations. Handle in accordance with manufacturer's instructions.

1.05 REFERENCE STANDARDS

A. American Society for Testing and Materials (ASTM), latest edition:

1. ASTM A525 Specifications for General Requirements for Steel Sheet, Zinc-Coated (Galvanized) by the Hot-Dip Process

B. National Electrical Manufacturer's Association (NEMA), latest edition:

1. NEMA Standard KS1

PART 2 PRODUCTS

2.01 OVERHEAD COILING DOOR

A. Metal coiling insulated rolling door shall be Stormtite Insulated Rolling Service Door, Series 625 as manufactured by Overhead Door Corporation, or equal. Sizes to be as shown on the Plans.

1. Slat Profile: Flat, Type F-265i

2. Slat Material: Aluminum 0.40" front slat and Aluminum 0.24" back slat, insulation to be CFC free, Foamed-In-Place Polyurethane Insulation

3. Finish: PowderGuard Premium Powder coat finish, color to be selected by Owner from manufacturer's standard colors

4. Bottom Bar: Extruded aluminum

5. Guides: Steel

6. Wind Load: 20 psf

7. Hood: Aluminum

8. Lock: Chain keepers on chain hoist

9. Mounting: Face of wall

10. Weatherseals: Bottom, interior hood baffle and exterior curtain-side guide

11. Electric Motor Operation: Provide UL listed electric operator, size as recommended by manufacturer to move door in either direction at not less than 2/3 foot or nor more than 1 foot per second. Motor to be 120-volt. Operator controls push-button (key).

PART 3 EXECUTION

3.01 INSTALLATION

A. Overhead coiling door shall be installed where indicated, and in accordance with the manufacturer's printed installation instructions. Horizontal lines shall be level, and vertical lines shall be plumb. Anchors for guides, brackets, and other fasteners shall be located where indicated.

3.02 ADJUSTING AND CLEANING

A. Adjusting and cleaning shall consist of ensuring smooth operation, lubricating, and testing of the overhead door. Overhead coiling door shall operate smoothly, quietly and without squeaking and binding.

END OF SECTION

SECTION 08410

ALUMINUM DOORS, WINDOWS, AND FRAMES

PART 1 GENERAL

1.01 SCOPE OF WORK

A. Furnish all labor and materials required and install aluminum doors, windows, and frames as shown on the Drawings and as specified herein.

1.02 RELATED SECTIONS

A. Section 07901 – Joint Sealants

B. Section 08800 – Glazing

C. Drawings and general provisions of Contract, including General Conditions and other Division 1 Specification Sections, apply to this Section.

1.03 SUBMITTALS

A. See Section 01300, Submittals, for submittal procedures. Shop drawings and product data shall include the following:

1. Prior to start of fabrication, shop drawings to Engineer for approval.

2. Drawings shall indicate location of windows, opening dimensions and details of head, jamb, and sill at each opening.

PART 2 PRODUCTS

2.01 MATERIALS

A. All door, window and framing systems shall be Powder Coated similar or equal to Kawneer Permacoat AAMA 2604. Color shall be selected by the Owner from the Manufacturer's standard colors.

B. Kawneer Trifab 451T, exterior framing system, or equal. Provide accessory parts, shapes and brake metal as required for a complete installation. Storefront System – 2" x 4-1/2" nominal dimension; Thermal, Front Set-Glazed, Screw Spline Fabrication.

C. Kawneer TRIFAB 450, interior framing system, or equal. Provide accessory parts, shapes and brake metal as required for a complete installation. Storefront System – 1-3/4" x 4-1/2" nominal dimension; Non-Thermal, Front Set-Glazed, Shear Block Fabrication.

D. Doors to be Kawneer, 350 Medium Style or Flushline doors, or equal, of sizes shown on the Drawings. Supply closers and thresholds where required. Bottoms and edges of doors shall be weather stripped with a full width metal bound, replaceable pile weather stripping.

1. Door corner construction shall consist of mechanical clip fastening, SIGMA 1-1/8" long fillet welds along top and bottom of rail extrusion at stile and rail intersection, and deep penetration plug weld at all four corners of door. **MUST BE FULL PENETRATION PLUG WELD TO LEG OF CLIP, 1-1/8" LONG FILLET WELDS ALONG TOP AND BOTTOM OR RAILS AT STILES INTERSECTION, NO TIE-ROD CONSTRUCTION OF ANY TYPE OR PARTIAL DESIGN ALLOWED.** Meeting rail to still joint fillet weld "only" is NOT ACCEPTABLE. Glazing stops shall be hook-in type with EPDM glazing gaskets reinforced with non-stretchable chord

E. Substitutions:

1. General: Refer to Substitutions Section for procedures and submission requirements.

2. Pre-Contract (Bidding Period) Substitutions: Submit written requests ten (10) days prior to bid date.

3. Substitution Documentation

a. Product Literature and Drawings: Submit product literature and drawings modified to suit specific project requirements and job conditions.

b. Certificates: Submit certificate(s) certifying substitute manufacturer (1) attesting to adherence to specification requirements for storefront system performance criteria, and (2) has been engaged in the design, manufacturer and fabrication of aluminum storefront for a period of not less than ten (25) years.

4. Samples: Provide samples of typical product sections and finish samples in manufacturer's standard sizes.

5. Substitution Acceptance: Acceptance will be in written form, either as an addendum or modification.

F. All exposed screws to be tamper proof.

G. Hardware: Furnish and install hardware as follows for each Kawneer Door: Cylinders shall be subject to change construction master, building master and grand master keys as specified in Section 08710 – Door Hardware. See Hardware Schedule for remainder of hardware.

1. Continuous Geared Hinge: Kawneer Co., or equal.
2. Threshold: Nat'l. Guard Products, Inc., 513 SIA, or equal.

PART 3 EXECUTION

3.01 INSTALLATION

A. Comply with manufacturer's recommendations for the installation of aluminum doors, door frames and windows.

B. Set units plumb, level and true to line without warp or rack of frames and doors. Anchor securely in place. Separate dissimilar metals with bituminous coatings or preformed separators.

C. Set sill members and other members in a bed of compound to provide weather tight construction. Provide aluminum subsills where shown on Drawings.

D. Obtain actual job site dimensions of each masonry opening and fabricate to fit with clearances indicated on the Drawings.

E. Provide each continuous unit of framework, doors, sidelights, hardware and all accessory items as a packaged unit. Complete the fabrication, assembly and finishing before shipment to the project site to the greatest extent possible.

F. Complete the cutting, fitting, forming, drilling and grinding of all metal work prior to cleaning, finishing, treatment and application of coatings.

G. Weld by methods recommended by the manufacturer and AWS to avoid discoloration at welds. Grind exposed welds smooth and restore mechanical finish. Remove arises from cut edges and ease edges and corners to a radius of approximately 1/64".

H. Conceal fasteners wherever possible. Joints shall be drawn up to an invisible or hair line crack. Exposed fasteners shall be flush with finished surface of the member.

I. Reinforce the work, as necessary, for performance requirements and for support to the system. Provide separators which will prevent corrosion. Provide cutouts and concealed reinforcement shall be equal to 3/16" thick steel straps.

3.02 CLEANING

A. Cleaning: Remove temporary coverings and protection of adjacent work areas. Repair or replace damaged installed products. Clean installed products in accordance with manufacturer’s instructions prior to owner’s acceptance. Remove construction debris from project site and legally dispose of debris.

B. Protection: Protect installed product’s finish surfaces from damage during construction. Protect aluminum entrances from damage from grinding and polishing compounds, plaster, lime, acid, cement, or other harmful contaminants. Remove and replace damaged aluminum entrances at no extra cost.

END OF SECTION

THIS PAGE INTENTIONALLY LEFT BLANK

SECTION 08710

DOOR HARDWARE

PART 1 GENERAL

1.01 SCOPE OF WORK

A. This Section includes items known commercially as finish or door hardware.

1.02 RELATED SECTIONS

A. Section 07901 – Joint Sealants

B. Section 08410 – Aluminum Doors, Windows and Frames

1.03 REFERENCE STANDARDS

A. Steel Door Institute (SDI), latest edition:

1. SDI 110 Recommended Selection for Standard Steel Doors, Frames, Accessories and Related Components

B. National Fire Protection Association (NFPA), latest edition:

1. NFPA 80 Standard for Fire Doors and Other Opening Protectives

1.04 SUBMITTALS

A. General: Submit the following in accordance with Conditions of Contract and Division 1 Specification sections.

B. Product data including manufacturers' technical product data for each item of door hardware.

C. Final hardware schedule coordinated with doors, frames, and related work to ensure proper size, thickness, hand, function, and finish of door hardware.

1. Submittal Sequence: Submit final schedule at earliest possible date particularly where acceptance of hardware schedule must precede fabrication of other work that is critical in the Project construction schedule. Include with schedule the product data, samples, shop drawings of other work affected by door hardware, and other information essential to the coordinated review of schedule.

2. Keying Schedule: Submit separate detailed schedule indicating clearly how the Owner's final instructions on keying of locks has been fulfilled.

D. Templates for doors, frames, and other work specified to be factory prepared for the installation of door hardware. Check shop drawings of other work to confirm that adequate provisions are made for locating and installing door hardware to comply with indicated requirements.

1.05 QUALITY ASSURANCE

A. Supplier Qualifications: A recognized architectural door hardware supplier that has a record of successful in-service performance for supplying door hardware similar in quantity, type, and quality to that indicated for this Project.

1. Require supplier to meet with Engineer to finalize keying requirements and to obtain final instructions in writing.

B. Fire-Rated Openings: Provide door hardware for fire-rated openings that complies with NFPA Standard No. 80 and requirements of authorities having jurisdiction. Provide only items of door hardware that are listed and are identical to products tested by UL, Warnock Hersey, FM, or other testing and inspecting organization acceptable to authorities having jurisdiction for use on types and sizes of doors indicated in compliance with requirements of fire-rated door and door frame labels.

1.06 DELIVERY, STORAGE, AND HANDLING

A. Tag each item or package separately with identification related to final hardware schedule and include basic installation instructions with each item or package.

B. Packaging of door hardware is responsibility of supplier. As material is received by hardware supplier from various manufacturers, sort and repackage in containers clearly marked with appropriate hardware set number to match set numbers of approved hardware schedule. Two (2) or more identical sets may be packed in the same container.

C. Inventory door hardware jointly with representatives of hardware supplier and hardware installer until each is satisfied that the count is correct.

D. Deliver individually packaged door hardware items promptly to place of installation (shop or Project site).

E. Provide secure lock-up for door hardware delivered to the Project, but not yet installed. Control handling and installation of hardware items that are not immediately replaceable so that completion of the Work will not be delayed by hardware losses both before and after installation.

PART 2 PRODUCTS

2.01 MATERIALS AND FABRICATION

A. Manufacturer's Name Plate: Do not use manufacturers' products that have manufacturer's name or trade name displayed in a visible location (omit removable nameplates) except in conjunction with required fire-rated labels and as otherwise acceptable to Engineer.

1. Manufacturer's identification will be permitted on rim of lock cylinders only.

B. Fasteners: Provide hardware manufactured to conform to published templates, generally prepared for machine screw installation. Do not provide hardware that has been prepared for self-tapping sheet metal screws, except as specifically indicated.

C. Furnish screws for installation with each hardware item. Provide Phillips flat-head screws except as otherwise indicated. Finish exposed (exposed under any condition) screws to match hardware finish or, if exposed in surfaces of other work, to match finish of this other work as closely as possible including "prepared for paint" surfaces to receive painted finish.

D. Provide concealed fasteners for hardware units that are exposed when door is closed except to the extent no standard units of type specified are available with concealed fasteners. Do not use thru-bolts for installation where bolt head or nut on opposite face is exposed in other work unless their use is the only means of reinforcing the work adequately to fasten the hardware securely.

E. Locks shall have 2 3/4-inch backset. Fronts shall be beveled 1/8-inch in 2 inches.

2.02 LOCK CYLINDERS AND KEYING

A. Standard System: Provide new masterkey system for Project.

B. Equip locks with manufacturer's special 6-pin tumbler cylinder with construction masterkey feature that permits voiding of construction keys without cylinder removal.

C. Bows of keys shall be stamped with a key symbol as directed by Engineer. The key symbols, in general, will consist of three letters and two numbers, thus: We-H12.

D. Key Material: Provide keys of nickel silver only.

E. Key Quantity: Furnish three (3) change keys for each lock and six (6) master keys.

1. Furnish six (6) construction master keys
2. Deliver permanent keys to Engineer
3. Deliver construction keys to Contractor

PART 3 EXECUTION

3.01 INSTALLATION

A. Mount hardware units at heights indicated in following applicable publications, except as specifically indicated or required to comply with governing regulations and except as otherwise directed by Engineer.

1. "Recommended Locations for Builders Hardware for Standard Steel Doors and Frames" by the Steel Door Institute

2. NWWDA Industry Standard I.S.1.7, "Hardware Locations for Wood Flush Doors"

B. Install each hardware item in compliance with the manufacturer's instructions and recommendations. Where cutting and fitting is required to install hardware onto or into surfaces that are later to be painted or finished in another way, coordinate removal, storage, and reinstallation or application of surface protection with finishing work specified in the Division 9

Sections. Do not install surface-mounted items until finishes have been completed on the substrates involved.

C. Set units level, plumb, and true to line and location. Adjust and reinforce the attachment substrate as necessary for proper installation and operation.

D. Drill and countersink units that are not factory prepared for anchorage fasteners. Space fasteners and anchors in accordance with industry standards.

E. Set thresholds for exterior doors in full bed of butyl-rubber or polyisobutylene mastic sealant complying with requirements specified in Section 07901, Joint Sealers.

3.02 ADJUSTING, CLEANING, AND DEMONSTRATING

A. Adjust and check each operating item of hardware and each door to ensure proper operation or function of every unit.

B. Clean adjacent surfaces soiled by hardware installation.

C. Instruct Owner's personnel in the proper adjustment and maintenance of door hardware and hardware finishes.

3.03 HARDWARE SCHEDULE

A. General: Provide hardware for each door to comply with requirements of Section “Door Hardware,” hardware set numbers indicated in door schedule, and in the following schedule of hardware sets.

1. Hardware sets indicate quantity, item, manufacturer and product designation, size, and finish or color, as applicable.

2. Examine the details of items for which hardware is to be furnished and where finished shape or size of members taking hardware is such as to prevent, or make unsuitable, use of the exact types specified, suitable types having as nearly as practicable the same operation and quality as the type specified shall be furnished.

3. All hardware provided and installed shall meet handicap accessibility guidelines.

3.04 DOOR HARDWARE

A. Manufacturer Symbols are as follows:

1.	N	Norton or approved equal
2.	NG	National Guard Products or approved equal
3.	RW	Rockwood Manufacturing Company or approved equal
4.	S	Stanley Hardware or approved equal
5.	SC	Schlage or approved equal

B. Hardware schedule is as follows:

1. Hardware Set No. 1 – Exterior Single Doors

S	3 EA	BUTTS FBB179 – 4 1/2" X 4 1/2" X 652 X NRP (AWS X AMS)
SC	1 EA	KEYLOCK ND53PD RHODES X 2 3/4" BS/ 14-019 X 10-025 X 626
N	1 EA	CLOSER P8501BF-H X AL X SNB
NG	1 EA	THRESHOLDS 424 X 36"
NG	1 EA	DOOR SWEEPS 200NA X 36"

2. Hardware Set No. 2 – Interior Single Doors

S	3 EA	BUTTS FBB179 – 4 1/2" X 4 1/2" X 652 X NRP (AWS X AMS)
SC	1 EA	KEY LOCKS ND70PD X 2 3/4" BS/14-019 X 10-025 X 626
N	1EA	CLOSER P8501BF-H X AL X SNB

3. Hardware Set No. 1 – Exterior Double Doors

S	6 EA	BUTTS FBB179 – 4 1/2" X 4 1/2" X 652 X NRP (AWS X AMS)
SC	1 EA	KEYLOCK ND70PD X 22/4BS/14-019 X 10-025 X 626
N	2 EA	CLOSER P8501BF-H X AL X SNB
NG	2 EA	THRESHOLDS 424 X 36"
NG	2 EA	DOOR SWEEPS 200NA X 36"
NG	1 EA	OVERLAPPING ASTRAGAL 178 SDK B-84
NG	2 SET	WEATHERSTRIP 160 V X 1 PC X 2 PC 84” x 2 PC
RW	1 EA	FLOOR STOPS 471 X 626
RW	2 EA	MANUAL FLUSH BOLTS 555/557 TO SUIT DOOR TYPE

END OF SECTION

THIS PAGE INTENTIONALLY LEFT BLANK

SECTION 08800

GLAZING

PART 1 GENERAL

1.01 SCOPE OF WORK

A. Furnish all material, labor, equipment, and services necessary for glazing of the doors and door transoms as indicated on the drawings and as described in this specification.

1.02 RELATED SECTIONS

A. Section 08410 – Aluminum Doors, Windows, and Frames

1.03 SUBMITTALS

A. See Section 01300, Submittals, for submittal procedures.

1.04 PROJECT CONDITIONS

A. Obtain glass sizes from the work at the building or from the manufacturer of frames, sash, etc., in which the glass is to be set. Responsibility for correct glass sizes rests with Glass and Glazing Subcontractor.

1.05 QUALITY STANDARDS

A. Acceptable manufacturers for glass substrate: Guardian Industries Corp., Libby-Owens Ford Co., PPG Industries, Inc., Glass Group and Saint-Gobain/Euroglass. Acceptable fabricators for laminated units are limited to: Viracon, Inc., Interpane Glass Co., Guardian Industries Corp., HGP/Tempglass Eastern, Inc. and Cardinal IG.

B. Manufacturer of insulating glass shall warrant that insulating glass will not, for a period of ten years from date of manufacture, develop obstruction to vision due to film formation or dust collection due to failure of hermetic seal, and that all non-conforming glass will be replaced, but not installed, without cost to Owner.

C. AFPC V2 2701.1 “Each light shall bear the manufacturer’s label designating the type and thickness of glass.” AFPC V2 2701.2 “Each unit of tempered glass shall be permanently identified by the manufacturer. The identification shall be etched or ceramic fired on the glass and be visible when the unit is glazed.”

D. AFPC V2 2703.1 “Individual glazed areas in hazardous locations such as those indicated in 2703.2 shall pass the test requirements of ‘Safety Standard for Architectural Glazing Materials Consumer Product Safety Commission (CPSC) 16 CFR 1201’ or by comparative test shall be proven to produce at least equivalent performances.” ***EXCEPTIONS*:**

1. Polished wire glass for use in fire doors, fire windows and view panels in 1-hr fire resistant walls and hazardous locations in 2703.2.1 (6) and 2703.2.1(7) shall comply with ANSI Z97.1.

2. Approved plastic materials used as glazing in hazardous locations shall comply with ANSI Z97.1.

E. AFPC V2 2703.2.1. "The following shall be considered specific hazardous locations for the purposes of glazing:

1. Glazing in ingress and egress doors except wired glass in required fire doors and jalousies

2. Glazing in fixed and sliding panels of sliding (patio) door assemblies and panels in swinging doors

3. Glazing in storm doors

4. Glazing in all unframed swinging doors

5. Glazing in doors and enclosures for hot tubs, whirlpools, saunas, steam rooms, bathtubs and showers

6. Glazing in any portion of a building wall enclosing these compartments where the bottom edge of the glazing is less than 60 inches above the drain inlet

7. Glazing in an individual fixed or operable panel adjacent a door where the nearest vertical edge is within a 24" arc of the door in a closed position and whose bottom edge is less than 60" above the floor or walking surface

8. Glazing in an individual fixed or operable panel, other than those locations described in Items 5 and 6 above, that meets all of the following conditions:

a. Exposed area of an individual pane greater than 9 sq. ft.

b. Bottom edge less than 18" above the floor

c. Top edge greater than 36" above the floor

d. One or more walking surfaces within 36" horizontal of plane glazing

e. All glazing in railings regardless of area or height above a walking surface including structural baluster panels and nonstructural in-fill panels."

PART 2 PRODUCTS

2.01 MATERIALS

A. Insulating-Glass Units: Pre-assembled units consisting of sealed lites of glass separated by a dehydrated interspace, and complying with ASTM E 774 for class CBA units and requirements specified herein.

1. Provide Kind HS (heat strengthened) float glass in place of annealed glass where needed to resist thermal stresses induced by differential shading of individual glass lites and to comply with glass design requirements specified in “Performance Requirements” Article.

B. Provide Kind FT (fully tempered) where safety glass is indicated.

C. Provide high performance low-emissivity coating on No. 2 surface. Min. performance requirements are implicit in products specified as the basis of design.

D. 1" Tinted Insulated Unit: VITRO Architectural Glass. This glass is to be used at areas indicated on the Drawings.

1. Exterior Lite: 1/4" VITRO Solarban® 70 on Solargray® Low-E #2
2. Interior Lite: 1/4" Clear
3. 1/2" Cavity Air (Standard)
4. Performance Characteristics
5. Visible Light transmittance: 32%
6. Solar Heat Gain Coefficient: 0.19
7. Winter U-factor/U-Value (Btu/hr-ft^2-F°): 0.28

E. 1/4" Clear Glass: VITRO Architectural Glass 1/4" clear float glass, or equal.

F. 1/4" & 3/8" Clear Tempered Glass: VITRO Architectural Glass, 1/4" & 3/8" clear float Herculite Tongless Tempered Safety Glass, or equal.

G. 3/16" Fire-Rated Glass: FireLite, fire-rated glass ceramic by TGP (Technical Glass Products), or equal.

H. Setting Blocks: Neoprene, 70-90 durometer hardness.

I. Spacers: Neoprene, 40-50 durometer hardness.

J. Glazing Tape: Tremco, pre-shimmed 440 tape, or equal, 1/8" minimum.

K. Sealant: Dow Corning 781, GE Silicone 1200 or other approved black acid-type silicone rubber elastomeric sealant.

L. Silicone Glazing Sealant: Tremco Proglaze Silicone Sealant, or equal, translucent.

M. Plate Glass Mirrors: Clear plate glass (FS DD-G-451), Type I, Class 1, quality g2, 1/4" thick with silver coating, copper protective coating and 2 mil thick paint coating, complying with CS27.

N. Mirror Mastic: An adhesive setting compound for installation by spot application method with support only at the bottom edge.

PART 3 EXECUTION

3.01 INSTALLATION GENERAL

A. Refer to the sections of these specifications containing references to other work which must be executed in conjunction with glass and glazing.

B. Each glazing installation shall remain airtight and watertight under normal temperature change, wind loads and impact loads without failure or deterioration of glazing or glass.

C. Protect glass from edge damage at all times during handling and installation.

D. Do not attempt to cut, nip or abrade glass which is heat strengthened, tempered or coated.

E. Remove and reset glazing beads without marring or defacing any portion of doors, windows, or beads. Clean glazing channel or framing immediately before glazing.

F. Install setting blocks of proper size at quarter points of sill rabbet. Provide spacers, inside and out, for all glass larger than 50 united inches except at gasket glazing.

G. Force sealant into channel to eliminate air pockets and voids and to ensure complete wetting of glass and channel surfaces. Tool exposed surfaces of sealants to provide “wash” away from glass surface. Clean and trim excess glazing material.

H. Do not remove labels until glass and mirrors are inspected and approved by the Architect. Replace all breakage caused in executing the work or by faulty installation without cost to the Owner. Improperly set glass or glazing which does not fully meet the requirements of its grade will not be accepted. Such glass must be replaced without cost to the Owner.

I. Clean all glass prior to final inspection.

3.02 LOCATION OF GLASS

A. Each window, sidelight, frame, transom, and door with opening for glass shall be glazed with glass of the type indicated on the Drawings.

END OF SECTION

SECTION 09902

FINISH PAINTING

PART 1 GENERAL

1.01 DESCRIPTION

A. Furnish all material, labor, scaffolding and equipment required to complete all work shown on the Drawings and specified herein. Work includes painting and finishing of all new exterior and interior exposed items and surfaces and some refinishing of existing surfaces as specified or noted on the Drawings.

B. Paint all exposed surfaces except where the natural finish of the material is obviously intended and specifically noted as a surface not to be painted. Where items or surfaces are not specifically mentioned, paint these the same as adjacent similar materials or areas.

C. It is the intent of this Section to paint items as specified herein, as indicated on the Drawings, and all other work obviously required to be finish painted unless otherwise specified. These items include but are not limited to the following: interior concrete and precast concrete surfaces where noted or scheduled; concrete masonry units; structural steel; miscellaneous metals including steel doors and frames, and steel frames for glazed openings; pipe, fittings, supports, valves, gates, operators and posts; roof fans; electrical conduit and appurtenances; interior gypsum work; interior concrete masonry unit walls; and exposed ductwork. Minor items omitted in the schedule of work shall be included in the work of this Section where they come within the general intent of the specifications as stated herein.

D. Galvanized steel for miscellaneous metal structures including stairs, platforms, etc. shall not receive an additional field coating beyond touchup and coating repair due to cutting or damage. All galvanized steel for architectural features including lintels, jambs, flashing, etc. shall be field painted in accordance with the schedules and details on the Architectural Drawings.

E. The following surfaces or items are not required to be painted:

1. Portions of metal, other than aluminum, embedded in concrete. This does not apply to the back face of items mounted to concrete or masonry surfaces that shall be painted before erection. Aluminum to be embedded in or in contact with concrete or masonry shall be coated to prevent electrolysis.

2. Stainless steels and non-ferrous metals (except copper), unless specified or noted otherwise.

3. Concealed surfaces of pipe or crawl spaces.

4. Exterior cast-in-place or precast concrete surfaces, unless otherwise specified or noted elsewhere.

5. Suspended acoustical tile ceilings.

6. Tile.

7. Door and other finish hardware, except door closers that are not finished.

8. Manhole frames and covers.

9. Fiberglass other than piping.

10. Packing glands and other adjustable parts, and nameplates and data plates of mechanical equipment.

11. Fencing.

12. Chemical resistant or epoxy flooring.

13. Abrasion resistant topping.

14. Plumbing fixtures.

15. Furniture.

16. Factory prefinished architectural components.

17. Membrane roofing.

18. Mechanical and electrical equipment that has been factory finished as specified in Divisions 11, 13, and 16.

19. Do not paint any code required labels such as Underwriters Laboratories (UL) and Factory Mutual (FM), or any equipment identification, performance rating, name or nomenclature plates.

20. Unless otherwise specified, concealed spaces do not require painting. This includes walls and ceilings in inaccessible spaces such as pipe chases, furred areas, duct shafts, etc.

F. Where rooms are shown in the finish schedule to have unfinished walls and ceilings, paint metal doors and frames and other miscellaneous items in these spaces.

G. Paint that contains mercury, asbestos or lead will not be permitted.

1.02 RELATED WORK

A. Section 4200 – Masonry

1.03 WORK SPECIFIED ELSEWHERE

A. Unless otherwise specified, shop priming of ferrous metal items is included under the various sections for structural steel, miscellaneous metal, hollow metal work, fabricated or factory built mechanical and electrical equipment or accessories.

B. Coating requirements for fabricated or factory built mechanical and electrical equipment and accessories are included under specific sections for those items.

C. Painting of exposed piping, conduit, ductwork, insulated piping, equipment, and other mechanical or electrical work in mechanical rooms. Coordinate painting with the Mechanical and Electrical Subcontractors.

D. Labeling of piping and conduit.

E. Waterproofing and damproofing.

1.04 REFERENCES

A. American Society for Testing and Materials (ASTM), latest edition:

1. ASTM D4258 – Standard Practice for Surface Cleaning Concrete for Coating

2. ASTM D5162 – Standard Practice for Discontinuity (Holiday) Testing of Nonconductive Protective Coatings on Metallic Substrates

B. American Water Works Association (AWWA)

C. Great Lakes – Upper Mississippi River Board of State and Provincial Public Health and Environmental Managers (Ten State Standards)

D. National Science Foundation (NSF), latest edition:

1. NSF 61 – Drinking Water System Components – Health Effects.

E. Occupational Safety and Health Act (OSHA), latest edition:

1. Air Pollution Control Rules

2. Color Coding

F. Society for Protective Coatings (SSPC) and National Association of Corrosion Engineers (NACE), latest edition:

1. SSPC-SP-1 – Solvent Cleaning

2. SSPC-SP-2 – Hand Tool Cleaning

3. SSPC-SP-3 – Power Tool Cleaning

4. SSPC-SP-5/NACE No. 1 – White Metal Blast Cleaning

5. SSPC-SP-6/NACE No. 3 – Commercial Blast Cleaning

6. SSPC-SP-10/NACE No. 2 – Near-White Metal Blast Cleaning

7. SSPC-SP-11 – Power Tool Cleaning to Bare Metal

8. SSPC-SP-13/NACE No. 6 – Surface Preparation of Concrete

9. SSPC-PA2 – Measurement of Dry Coating Thickness with Magnetic Gages

10. NACE SP0188 – Discontinuity Holiday Testing of Protective Coatings

1.05 SUBMITTALS

A. Submit five (5) copies of manufacturer's printed brochures showing the type of materials to be used for each painting system. Submit certification from the finish paint manufacturer that the manufacturer’s materials are suitable for the intended application as shown on the Drawings and as specified herein.

B. Submit to the Engineer for review in accordance with Section 01300 shop drawings, working drawings, and product data including manufacturer's specifications and data on the proposed paint systems and detailed surface preparation, application procedures and dry film thickness (DFT). Certify that the systems submitted meet all applicable volatile organic carbon regulations. Equivalent systems are to be submitted at no additional costs to meet any new regulations.

C. Submit to the Engineer for review in accordance with Section 01300 color cards, including standard and special colors, for initial color selections. Coordinate color samples with other Sections through the submittal process, as required by the Engineer.

D. Submit documentation of the compatibility between prime coats and finish coats along with the date and ambient conditions for application of prime coat with an established recoat window allowed for each prime system. Submit corrective surface preparation techniques for all systems in the event that the recoat window is missed.

E. Submit to the Engineer for review a complete Schedule of Painting Operations within 90 days after the Notice to Proceed. This Schedule is imperative so that the various fabricators may be notified of the proper shop prime coat to apply.

1. Properly notify and coordinate the fabricators' surface preparation and painting operations with these Specifications. This Schedule shall include for each surface to be painted, the brand name, the percent volume of solids, the coverage and the number of coats the Contractor proposes to use in order to achieve the specified dry film thickness, and color charts.

2. When the Schedule has been approved, apply all material in strict accordance with the approved Schedule and the manufacturer's instructions.

3. Wet and dry paint film gauges shall be made available to the Engineer to verify the proper application while work is in progress.

F. Submit listing of not less than 3 of applicator's most recent applications representing similar scope and complexity to Project requirements. List shall include information as follows:

1. Project name and address

2. Name of Owner

3. Name of Contractor

4. Name of Engineer

5. Date of Completion

1.06 QUALITY ASSURANCE

A. Required Applicator Inspections and Documentation:

1. Verify coatings and other materials are as specified.

2. Verify environmental conditions are as specified.

3. Verify surface preparation and coating application are as specified.

4. Verify DFT of each coat and total DFT of each coating system are as specified using wet film and dry film gauges. DFT's shall be measured in accordance with SSPC-PA2.

5. Coating Defects

a. Check Coating for film characteristics or defects that would adversely affect performance of coating systems.

b. Check exterior finish for film characteristics or defects that adversely affect appearance.

c. Check for holidays on steel immersion, and concrete immersion or severe corrosive environment surfaces using a holiday detector in accordance with ASTM D5162.

B. Report:

1. Prepare inspection reports daily.

2. Submit written reports describing inspections made and actions taken to correct nonconforming work.

3. Report nonconforming work not corrected.

4. Submit copies of report to Engineer

C. Manufacturer’s Service

1. A representative of the paint manufacturer shall be available to provide on-site technical assistance, and guidance for application of the paint system as needed.

1.07 INSTALLER QUALIFICATION

A. Engage only factory trained, approved applicators that have successfully completed applications using specified materials on projects of similar size and scope.

B. Provide three (3) recent references indicating successful application using similar materials.

C. Provide written approval letter from the material manufacturer.

D. All of the contractor’s jobsite personnel must be trained in the hazards associated with confined space entry. All personnel entering a confined space shall be certified for confined space entry.

1.08 PRODUCT HANDLING

A. Deliver all materials to the job site in original, new and unopened packages and containers bearing manufacturer's name and label showing at least the following:

1. Name or title of the material

2. Federal Specification number, if applicable

3. Manufacturer's name and stock number

4. Contents by volume for major constituents

5. Thinning instructions

6. Application instructions

B. Provide proper storage to prevent damage to, and deterioration of, paint materials.

C. Use all means necessary to protect the materials of this section before, during, and after installation and to protect the work and materials of all other trades.

D. In the event of damage, immediately make all repairs and replacements necessary to the approval of the Engineer and at no additional cost to the Owner.

1.09 JOB CONDITIONS

A. Surface temperatures: Do not apply solvent-thinned paints when the temperature of surfaces to be painted and the surrounding air temperature are below 45 degrees F, unless otherwise permitted by the manufacturer's printed instructions as approved by the Engineer.

B. Weather conditions: Do not apply paint in snow, rain, fog, or mist; or when the relative humidity exceeds 85%; or to damp or wet surfaces, unless otherwise permitted by the manufacturer's printed instructions as approved by the Engineer. Applications may be continued during inclement weather within the temperature limits specified by the paint manufacturer during application and drying periods.

1.10 SAMPLES

A. Prior to starting work on the application of paint, Engineer may require the application of paint on a sample surface. Sample surface may be up to 200 square feet with coating of the material and colors selected. Prepare sample areas of finished work in strict accordance with these specifications. Finished areas shall be adequate for the purpose of determining the quality of workmanship, and all subsequent painting shall be equal in quality to the approved samples. Experimentation with color tints shall be furnished to the satisfaction of the Engineer where standard chart colors are not satisfactory. The work may not proceed until the Engineer approves the painting sample.

1.11 SPARE MATERIAL

A. Furnish one unopened gallon can of each type and each color of paint used. Paint shall be correctly stored to protect the integrity of the paint and shall be delivered to the Owner upon project completion and prior to final acceptance. Spare material containers shall be furnished with typed labels designating where the material was applied on this contract.

1.12 PRE-PAINTING CONFERENCE

A. Well in advance of commencement of painting operations, but after major equipment has been delivered, a pre-painting conference shall be held. All parties with an interest in the painting work shall attend, including the Contractor, the Owner, the Engineer, and the painting contractor (subcontractor) and a representative of the paint manufacturer. The Contractor shall be responsible for scheduling the meeting and contacting the participants.

B. The conference shall include an inspection of the areas to be painted by all parties and a discussion of the conformance of each area with the specifications. Important issues such as paint compatibility, environmental conditions, climate control systems, original primer, dry film thickness, and monitoring the number of coats that have been field applied shall be discussed and problems shall be resolved.

C. A written record of the meeting including an attendance list shall be submitted to the Engineer.

PART 2 PRODUCTS

2.01 PAINT MATERIALS

A. All painting materials shall be manufactured and supplied by Tnemec Company, Inc., Sherwin-Williams Company, and PPG Industries. Other manufacturers may be submitted for consideration as equals.

1. No brand other than those named will be considered for approval unless the brand and type of paint proposed for each item in the following schedule is submitted in writing to the

Engineer for approval within 30 days after the signing of the Notice to Proceed. Submittals shall include sufficient data describing the proposed products, substantiated by certified tests conducted at no expense to the Owner, which demonstrates equality to the paint(s) named. The type and number of tests performed shall be subject to the Engineer's approval. Color availability to match those colors specified will also be considered as an important property for equality.

2. The Engineer shall be the sole authority in the determination of the selection and acceptance of equals.

B. Provide the best quality grade of the various types of coatings as regularly manufactured by paint materials manufacturers approved by the Engineer. Materials not displaying the manufacturer's identification as a standard best-grade product will not be accepted.

C. Provide paints that are of durable and washable quality. Do not use paint materials that will not withstand normal washing as required to remove pencil marks, ink, ordinary soil, and similar material without showing discoloration, loss of gloss, staining, or other damage.

D. The Owner will select colors to be used in the various types of paint specified and will be the sole judge of the acceptability of the various glosses obtained from the materials proposed to be used in the work.

E. Provide paint undercoat produced by the same manufacturer as the finish coat. Use thinners only to the limit and type recommended by the manufacturer. Insofar as practicable, use undercoat, finish coat, and thinner material as parts of a unified system of paint finish.

F. All painting materials shall be used without adulteration and shall be mixed, thinned, and applied in strict conformance with the manufacturer’s recommendations.

G. Shop priming shall be done with primers that are guaranteed by the manufacturer to be compatible with the finish paints to be used. The contractor shall provide certification of all shop primed materials and equipment and its compatibility with finish coatings.

H. Proper containers shall be provided for painting wastes. The containers shall be located outside of buildings and disposal shall be in accordance with pertinent codes and applicable fire regulations and shall not be on the owner’s property. Paint wastes shall not be discharged to drains under any circumstances.

I. All regulations and recommendations of the paint manufacturer shall be followed with regard to the storage and application of coatings, and the safety of workmen and the public.

J. All coatings used on surfaces in contact with water being treated for and potable water shall be suitable for potable water contact and shall meet the appropriate regulatory requirements. A certification shall be provided from the coating manufacturer attesting to such with the coating submittal.

2.02 PAINTING SCHEDULE

A. Paint types shall be as described and defined below. The Owner will select all colors from color charts submitted by the Contractor.

B. The following surfaces shall have the types of paint scheduled below applied at the dry film thickness in mils per coat noted. Some colors will require additional coat and thickness than that listed in order to achieve proper color coverage and shall be provided at no additional cost if necessary. A coating system has been designated for the purpose of identifying type and standard. Equivalent coating systems for the other manufacturers will be considered. Adequate information shall be submitted to the Engineer to permit a determination of the paint system being equal to that specified.

1. Interior exposed masonry

    a. Tnemec: 1 Coat 130-6602 Enviro-Fill (75 - 100 sq. ft./gal); 2 Coats 66HS/161HS-Color Hi-Build Epoxoline (3 - 6 mils DFT per coat) or

    b. Sherwin-Williams: 1 Coat, Cement Plex 875 (70 - 80 sq. ft./gal); 2 Coats Pro Industrial High Performance Epoxy (4 - 8 mils DFT per coat)

2. Aluminum in contact with dissimilar metals

    a. Tnemec: 2 Coats, 66HS/161HS-Color Hi-Build Epoxoline (2 - 3 mils DFT per coat) or

    b. Sherwin-Williams: 2 Coats, Macropoxy 646 (5 - 10 mils DFT per coat)

3. Exposed concrete walls above grade: Seal all cracks in accordance with manufacturer's recommendation.

    a. Tnemec: 2 Coats, 156 Enviro-Crete (4 - 8 mils DFT per coat) or

    b. Sherwin-Williams: 2 Coats, Loxon XP (6 - 8 mils DFT per coat)

C. Any surfaces that are not specifically named in the Schedule and not specifically excepted shall be prepared, primed, and painted in a manner and with a material that is consistent with these specifications. The Engineer will select which of the manufacturer's products, whether indicated or not, to be used on the unnamed surfaces. No extra payment shall be allowed for this painting.

2.03 APPLICATION EQUIPMENT

A. Only equipment recommended by the manufacturer and approved by the Engineer shall be used to apply any particular paint. Equipment shall be compatible for the paint and painting system.

2.04 FABRICATED EQUIPMENT

A. Unless otherwise indicated, all fabricated equipment shall be shop primed and shop or field finished.

B. All items to be shop primed shall be thoroughly cleaned to remove loose material and the surface adequately prepared. If, in the opinion of the Engineer, any primed coatings have been improperly or inadequately prepared, that coating shall be removed and the equipment shall be primed and coated in accordance with the specifications. Extra payment shall not be allowed.

C. Shop primed surfaces shall be thoroughly cleaned and any damaged or bare spots retouched with the specified primer before the application of successive coatings in the field.

D. The contractor shall be responsible to take whatever steps are necessary to preserve and protect the shop prime coats in the field against damage from weather or other causes.

E. Shop finish coats shall be equal in appearance and quality to finish coats that may be field applied. If in the opinion of the Engineer a shop finish coat does not provided such quality, the coating shall be prepared and additional coatings applied or reapplied until an acceptable finish is achieved.

F. Whenever fabricated equipment is required to be cleaned with a grit material, all motors, drives, bearings, gears, etc. shall be protected from the entry of grit. Any equipment found to be so contaminated shall be promptly and thoroughly cleaned.

PART 3 EXECUTION

3.01 SURFACE CONDITIONS

A. All surfaces to be painted shall be prepared as specified herein and shall be dry and clean prior to painting.

B. All metal welds, blisters, etc., shall be ground and sanded smooth in accordance with SSPC-SP-11. All pits and dents shall be filled and all imperfections shall be corrected to provide a smooth surface for painting. All rust, scale, grease, oil, and dirt shall be removed by the use of approved solvents, wire brushing or sanding.

C. Concrete block surfaces shall be smooth and cleaned of all dust, efflorescence, chalk, loose mortar, dirt, grease, oil, tar, and other foreign matter, conforming to ASTM D4258.

D. All plastic pipe surfaces shall be lightly sanded before painting.

E. Exposed Pipe: Bituminous coated pipe shall not be used in exposed locations. Pipe, which shall be exposed after project completion, shall be primed in accordance with the requirements herein. Any bituminous-coated pipe inadvertently installed in exposed locations shall be sandblasted clean before priming and coating. Coatings to seal bituminous coatings shall not be approved. After installation, all exterior, exposed flanged joints shall have the gap between adjoining flanges sealed with a single component polysulfide sealant to prevent rust stains.

F. Primed or Previously Painted Surfaces and Nonferrous Surfaces: All coated surfaces shall be cleaned prior to application of successive coats. All non-ferrous metals not to be coated shall be cleaned. This cleaning shall be done in accordance with SSPC-SP-1, Solvent Cleaning.

G. Shop-Finished Surfaces: All shop-coated surfaces shall be protected from damage and corrosion before and after installation by treating damaged areas immediately upon detection. Abraded or corroded spots on shop-coated surfaces shall be cleaned in accordance with SSPC-SP-2, Hand Tool Cleaning and then touched up with the same materials as the shop coat. All shop-coated surfaces that are faded, discolored, or which require more than minor touch-up in the opinion of the Engineer shall receive new surface preparation before being repainted. Cut edges of galvanized sheets and exposed threads and cut ends of galvanized piping, electrical conduit, and metal pipe sleeves, that are not to be finished painted, shall be "Solvent Cleaned" and primed with zinc dust-zinc oxide metal primer.

H. Galvanized and Zinc-Copper Alloy Surfaces: These surfaces to be painted shall be "Solvent Cleaned" and treated as hereinafter specified. Such surfaces not to be painted shall be "Solvent Cleaned."

I. Ferrous Metals: Remove all visible oil, dirt, and other soluble contaminants in accordance with SSPC-SP1. All surfaces shall be abrasive blast cleaned to a Commercial Finish removing all existing paint, rust, dirt, mill scale and foreign matter in accordance with SSPC-SP6/NACE No. 3.

J. Aluminum embedded or in contact with concrete must be painted according to the schedule for aluminum in contact with dissimilar materials.

K. Wood Surfaces: Prepare surfaces according to the manufacturer’s recommendations and prime, paint, stain or seal surfaces in accordance with the coatings schedule.

L. Cement Panel Ceilings: Apply one coat of USG Exterior Basecoat as recommended by the manufacturer. After recommended drying time, trowel apply USG Exterior Textured finish in a 1/16" minimum thick, uniform layer over all basecoat surfaces.

M. Do not proceed in areas of discrepancy until all such discrepancies have been fully resolved.

3.02 MATERIAL PREPARATION

A. Mix and prepare painting materials in strict accordance with the manufacturer's recommendations as approved by the Engineer.

B. Store materials not in actual use in tightly covered containers.

C. Maintain containers used in storage, mixing, and application of paint in a clean condition, free from foreign materials and residue.

D. Stir all materials before application to produce a mixture of uniform density, and as required during the application of materials. Do not stir into the material any film that may form on the surface. Remove the film and, if necessary, strain the material before using.

3.03 SURFACE PREPARATION

A. General:

1. Perform all preparation and cleaning procedures in strict accordance with the paint manufacturer's recommendations as approved by the Engineer.

2. Remove all removable items that are in place and are not scheduled to receive paint finish, or provide surface-applied protection prior to surface preparation and painting operations.

3. Following completion of painting in each space or area, reinstall the removed items by using workmen skilled in the necessary trades.

4. Clean each surface to be painted prior to applying paint or surface treatment.

5. Remove oil and grease with clean cloths and cleaning solvents of low toxicity and a flash point in excess of 38° F. prior to start of mechanical cleaning.

6. Schedule the cleaning and painting so that dust and other contaminants from the cleaning process will not fall onto wet, newly painted surfaces.

B. Preparation of Metal Surfaces:

1. Thoroughly clean all surfaces until they are completely free from dirt, oil and grease.

2. On galvanized surfaces, use solvent for the initial cleaning and then treat the surface thoroughly with phosphoric acid etch. Remove all etching solution before proceeding.

3. Touch-up shop-applied prime coats wherever damaged, dirty, or bare (all steel). Wire-brush, solvent clean, and touch-up with the same type of shop primer.

4. Allow drying thoroughly before application of paint.

C. Preparation of Wood Surfaces:

1. Clean all wood surfaces until they are free from dirt, oil, and all other foreign substance.

2. Smooth all finished wood surfaces exposed to view, using the proper sandpaper. Where so required, use varying degrees of coarseness in sandpaper to produce a uniformly smooth and unmarred wood surface.

3. Unless specifically approved by the Engineer, do not proceed with painting of wood surfaces until the moisture content of the wood is twelve percent (12%) or less as measured by a moisture-meter approved by the Engineer.

4. Prime, stain, or seal wood required to be job-painted immediately upon delivery to job. Prime edges, ends, face, undersides, and backsides of such wood, including cabinets, counters, etc. When transparent finish is required, use spar varnish for backpriming.

5. Seal tops and bottoms of wood doors with a heavy coat of varnish or equivalent sealer immediately upon delivery to job.

D. Preparation of Cementitious Surfaces:

1. Prepare cementitious surfaces of concrete and concrete block to be painted by removing all efflorescence, chalk, dust, dirt, grease, oils, and by roughening as required to remove glaze. Allow to cure as recommended by manufacturer prior to painting.

2. Determine the alkalinity and moisture content of the surfaces to be painted by performing appropriate tests. If the surfaces are found to be sufficiently alkaline to cause blistering and burning of the finish paint, correct this condition before application of paint. Do not paint over surfaces where the moisture content exceeds that permitted in the manufacturer's printed directions.

3.04 PAINT APPLICATION

A. General:

1. Slightly vary the color of succeeding coats. Do not apply additional coats until the complete coat has been inspected and approved. Only the inspected and approved coats of paint will be considered in determining the number of coats applied.

2. Sand and dust between enamel coats to remove all defects visible to the unaided eye from a distance of five feet.

3. On all removable panels and all hinged panels, paint the backsides to match the exposed sides.

4. Paint surfaces behind movable equipment and furniture the same as similar exposed surfaces. Paint surfaces behind permanently fixed equipment or furniture with prime coat only.

5. Paint interior surfaces of ducts, where visible through registers or grilles, with a flat, non-specular black paint, before final installation of equipment.

6. Finish exterior doors on tops, bottoms and side edges the same as the exterior faces. Finish tops and bottoms of wood doors same as faces except final coat may be omitted.

7. Fire rated corridor partitions, smokestop partitions, and all fire rated walls shall have signs or stenciling on the walls above the ceiling acceptable to the authority having jurisdiction such as 'Fire and Smoke Barrier Protect All Openings".

8. Paint existing surfaces in locations shown to be painted as required to match the new work specified.

B. Drying:

1. Allow sufficient drying time between coats. Modify the period as recommended by the material manufacturer to suit adverse weather conditions.

2. Oil-base and oleo-resinous solvent-type paints shall be considered dry for recoating when the paint feels firm, does not deform or feel sticky under moderate pressure of the thumb, and the application of another coat of paint does not cause lifting or loss of adhesion of the undercoat.

C. Brush application:

1. Brush out and work all brush coats onto the surfaces in an even film. Cloudiness, spotting, holidays, laps, brush marks, runs, sags, ropiness, and other surface imperfections will not be acceptable.

D. Spray application:

1. Confine spray application to metal framework and similar surfaces where hand brushwork would be inferior.

2. Wherever spray application is used, apply each coat to provide the equivalent hiding of brush-applied coats. Do not double back with spray equipment for the purpose of building up film thickness of two coats in one pass unless noted otherwise in this specification.

E. Roller Application:

1. Use roller application on interior wall and ceiling finishes when recommended by the manufacturer. Apply each roller coat to provide the equivalent hiding as brush-applied coats.

F. Completed work:

1. Completed work shall match the approved samples for color, texture, and coverage. Remove, refinish, or repaint all work not in compliance with specified requirements.

3.05 PAINT

A. General Notes and Guidelines

1. When color coding is specified or directed by the Engineer, it shall consist of color code painting and identification of all exposed conduits, through lines and pipelines for the transport of gases, liquids, or semi-liquids including all accessories such as valves, insulated pipe coverings, fittings, junction boxes, bus bars, connectors, and any operating accessories which are integral to a whole functional mechanical pipe and electrical conduit systems.

2. All moving parts, drive assemblies, and covers for moving parts, which are potential hazards, shall be Safety Orange.

3. All safety equipment shall be painted in accordance with OSHA standards.

4. All inline equipment and appurtenances not assigned another color shall be painted the same base color as the piping. The pipe system shall be painted with the pipe color up to but not including the flanges attached to pumps and mechanical equipment assigned another color.

5. All conduits shall be painted to match its background surface.

6. Control panels shall be factory finished.

5. All surface colors shall be painted as selected by the Owner.

3.06 REPAIR/RESTORATION

A. At completion of Work, touch-up and restore finishes where damaged.

B. Defects in Finished Surfaces:

1. When stain, dirt, or undercoats show through final coat, correct defects and cover with additional coats until coating is of uniform finish, color, appearance and coverage.

C. Touch-up of minor damage shall be acceptable where result is not visibly different from surrounding surfaces. Where result is visibly different, either in color, sheen, or texture, recoat the entire surface.

3.08 PROTECTION

A. Protect painted areas against damage until pain system is fully cured.

3.09 ONE-YEAR ANNIVERSARY INSPECTION

A. Owner shall set a date for a one-year inspection.

B. Inspection will be attended by a Representative of the Owner, Engineer, and Painting Contractor.

C. Repair deficiencies in coating systems as determined by Engineer in accordance with Coating Manufacturer’s instructions.

END OF SECTION

THIS PAGE INTENTIONALL LEFT BLANK

SECTION 10522

FIRE EXTINGUISHERS, CABINETS, AND ACCESSORIES

PART 1 GENERAL

1.01 RELATED DOCUMENTS

A. Drawings and general provisions of the Contract, including General and Supplementary Conditions and Division1 Specification Sections, apply to this Section.

1.02 SUBMITTALS

A. General: Submit the following according to the Conditions of the Contract and Division1 Specification Sections.

B. Product data for cabinets include rough-in dimensions, details showing mounting methods, relationships of box and trim to surrounding construction, door hardware, cabinet type and materials, trim style, door construction, panel style, and materials.

1.03 QUALITY ASSURANCE

A. Coordination: Verify that cabinets are sized to accommodate type and capacity of extinguishers indicated and provided by Owner under separate Contract.

B. UL-Listed Products: Fire extinguishers shall be UL listed with UL listing mark for type, rating, and classification of extinguisher.

C. Extinguishers shall be designed to address Class A, B, and C fires in general public areas.

PART 2 PRODUCTS

2.01 MANUFACTURERS

A. Fire Extinguisher Cabinets: Where shown on Drawings, install J.L. Industries Cosmopolitan 1037F10 fire extinguisher cabinet, or equal. Provide one Cosmic 5E Fire Extinguisher inside each cabinet.

B. Fire extinguisher, not shown to be located in cabinets, shall be provided with wall mounting brackets. Similar to Larsen's Manufacturing Company B-2 wall bracket.

PART 3 EXECUTION

3.01 INSTALLATION

A. Fire extinguishers shall be mounted with handles mounted not more than 48" above finish floor.

B. Install in locations and at mounting heights indicated or, if not indicated, at heights to comply with applicable regulations of governing authorities.

END OF SECTION

THIS PAGE INTENTIONALLY LEFT BLANK

SECTION 16000

ELECTRICAL GENERAL PROVISIONS

PART 1 GENERAL

1.01 SCOPE OF WORK

A. The City of Fayetteville currently operates a standby power paralleling power system that allows the Noland WWTP to drop off the Ozarks Electric Cooperative grid during peak demand days, securing favorable electric rates from the utility for this capability. The existing system utilizes a 277/480V standby generator, switchboard, step-up transformer, and 15kV on-pole switching device. This project will upgrade the paralleling system as described herein.

B. The Contractor shall remove on-pole voltage and current metering for the existing system, while maintaining the power pole for use as shown on the Drawings.

C. The Contractor shall maintain the existing on-pole switching device, a 630A recloser, for emergency bypass of the proposed switchgear as shown on the Drawings. The recloser controls shall be modified to a normally opened device, with closure only allowed when the proposed distribution breaker is opened.

D. The Contractor shall remove the existing medium voltage cabling and riser from the existing step-up transformer while maintaining the power pole for use as shown on the Drawings.

E. The Contractor shall provide and install all building electric equipment. The Contractor shall provide and install all heating and ventilating equipment as shown on the Drawings and detailed in Specification 16600.

F. The Contractor shall be responsible for unloading the 15kV switchgear when shipped to the jobsite. The Contractor shall install the equipment in the proposed building and coordinate all installation activities with the switchgear supplier. The Contractor shall assist the switchgear supplier during equipment startup as required. The switchgear has been pre-purchased by the Owner and the Contractor shall not be responsible for any warranties of the equipment. The Contractor shall only be responsible for warranties of the materials and methods of connections to the equipment.

G. The Contractor shall provide and install all underground raceway and cabling for the 15kV circuits into and out of the building.

H. The Contractor shall provide and install all underground control circuits to exterior equipment as shown on the Drawings.

I. The Contractor shall provide and install raceway and cable for a 480V three phase house power circuit and a fiber optic link to the plant as shown on the Drawings.

J. The Contractor shall supply and install a dual-purpose single circuit breaker docking station as detailed in Specification 16220 to replace the existing intelligent paralleling system switchboard. The dual-purpose docking station will serve as the short circuit protection for the existing standby

generator and also allow quick cable connections for a portable generator in the event of a failure of the existing generator.

K. All wiring and terminations for this project shall be provided under Division 16 unless otherwise specified.

L. The scope of the work consists of the furnishing and installing of complete electrical systems – exterior and interior – including miscellaneous systems. The Contractor shall provide all supervision, labor, materials, equipment, machinery, and any and all other items necessary to complete the systems. The Contractor shall note that all items of equipment are specified in the singular; however, the Contractor shall provide and install the number of items of equipment as indicated on the drawings and as required for complete systems.

M. The Contractor shall provide all conduit, wire, and field connections for all control panels, control stations, motors, and other miscellaneous equipment furnished under other Divisions of the project.

N. It is the intention of the Specifications and Drawings to call for finished work, tested, and ready for operation.

O. Any apparatus, appliance, material or work not shown on drawings but mentioned in the specifications, or vice versa, or any incidental accessories necessary to make the work complete and perfect in all respects and ready for operation, even if not particularly specified, shall be furnished, delivered and installed by the Contractor without additional expense to the Owner.

P. Minor details not usually shown or specified, but necessary for proper installation and operation, shall be included in the Contractor's estimate, the same as if herein specified or shown.

Q. With submission of bid, the Contractor shall give written notice to the Engineer of any materials or apparatus believed inadequate or unsuitable, in violation of laws, ordinances, rules; any necessary items or work omitted. In the absence of such written notice, it is mutually agreed the Contractor has included the cost of all required items in his proposal, and that he will be responsible for the approved satisfactory functioning of the entire system without extra compensation.

R. Provide all temporary power for construction. Coordinate requirements with other trades.

S. Provide all electrical demolition work associated with abandonment or relocation of existing facilities, including disconnecting and removal of all conduit and cable to equipment being removed.

1.02 RELATED SECTIONS

A. Excavation and backfilling responsibility shall be coordinated with Division 2 and conform to the requirements in Part 3 of this Specification.

B. Concrete work, including equipment pads, concrete electrical duct banks, lighting bases, and other miscellaneous work shall be coordinated with Division 3 and conform with Division 3 Specifications.

1.03 SUBMITTALS

A. Submit in accordance with Specification Section 01300, Submittals. Refer to individual specification sections for detailed submittal requirements.

B. No material shall be ordered or shipped to the project without approved submittals.

C. Submit one (1) copy of as-built project drawings, showing actual conduit locations and field changes.

1.04 GENERAL CONDITIONS

A. The General and Special Conditions for the construction of this project shall be a part of the Electrical Specifications. The Contractor shall examine the general and special conditions before submitting his or her proposal.

B. The Contractor shall be responsible for all work included in this section and the delegation of work to a subcontractor shall not relieve him of this responsibility.

C. Where items of the General Conditions or of the Special Conditions are repeated in this section of the specifications, it is intended to call particular attention to or qualify them; it is not intended that any other parts of the General Conditions or Special Conditions shall be assumed to be omitted if not repeated herein.

D. The naming of a certain brand or make or manufacturer in the specifications is to establish a quality standard for the article desired. The Contractor is not restricted to the use of the specific brand of the manufacturer named unless so indicated in the Specifications or Drawings. However, where a substitution is requested, a substitution will be permitted only with the written approval of the Engineer. All proposed substitutions shall be submitted to the Engineer no later than seven (7) working days prior to bid closing. The Contractor shall be responsible for installing the specified equipment unless approval by the Engineer is granted prior to bid closing. No substitute material or equipment shall be ordered, fabricated, shipped or processed in any manner prior to the approval of the Engineer. The Contractor shall assume all responsibility for additional expenses as required in any way to meet changes from the original material or equipment specified.

E. The Contractor shall examine drawings relating to work of all trades and become fully informed as to extent and character of work required and its relation to all other work in the project.

F. Before submitting bid, Contractor shall visit the site and examine all adjoining existing buildings, equipment and space conditions on which his work is in any way dependent for the best workmanship and operation according to the intent of specifications and drawings. He shall report to the Engineer any condition which might prevent him from installing his equipment in the manner intended.

G. No consideration or allowance will be granted for failure to visit site, or for any alleged misunderstanding of materials to be furnished or work to be done.

H. The Contractor shall be responsible for all arrangements and costs for providing temporary electrical metering, main switches and distribution panels at the site as required for construction purposes. The distribution panels shall be located at a central point designated by the Engineer.

1.05 CODES AND STANDARDS

A. All materials and workmanship shall comply with all applicable codes, specifications, local ordinances, industry standards, and utility company requirements.

B. In case of difference between the building codes, specifications, state laws, local ordinances, industry standards, utility company regulations, and the contract documents, the most stringent shall govern. The Contractor shall promptly notify the Engineer in writing of any such difference.

C. Noncompliance: Should the Contractor perform any work that does not comply with the requirements of the applicable building codes, state laws, local ordinances, industry standards, and utility company regulations, he shall bear the cost arising in correcting any such deficiency.

D. Applicable codes and all standards shall include all state laws, local ordinances, utility company regulations and the applicable requirements of the following nationally accepted codes and standards:

1.	ASME	American Society of Mechanical Engineers
2.	ASTM	American Society for Testing and Materials
3.	EIA	Electronic Industries Association
4.	IEEE	Institute of Electrical and Electronic Engineers
5.	IPCEA	Insulated Power Cable Engineers' Association
6.	NEC	National Electrical Code (NFPA No. 70)
7.	NBS	National Bureau of Standards
8.	NEMA	National Electrical Manufacturers' Association
9.	NFPA	National Fire Protection Association
10.	UL	Underwriters' Laboratories

1.06 FEES, PERMITS, AND INSPECTIONS

A. Obtain any and all required permits in connection with this work under the Contract and pay any and all fees in connection therewith. Arrange with the serving utility companies for the connections to all utilities and pay all charges for same including inspection fees and meters if required.

B. Under this section of work the Contractor shall, upon completion of the work, furnish a certificate of final inspection to the Engineer from the inspection department having jurisdiction.

1.07 DRAWINGS

A. The Electrical Drawings and Specifications under this division shall be made a part of the contract documents.

B. Failure to examine all documents shall not relieve the bidder of any responsibility nor shall it be used as a basis for additional compensations due to omission of details of other divisions from the electrical documents.

C. The Drawings are diagrammatic and indicate generally the locations of material and equipment. These Drawings shall be followed as closely as possible. The Contractor shall coordinate the work under this section with the architectural, structural, plumbing, heating and air conditioning, and the drawings of other trades for exact dimensions, clearances and roughing-in locations: This Contractor shall cooperate with all other trades in order to make minor field adjustments to accommodate the work of others.

D. The Drawings and Specifications are complementary, each to the other, and the work required by either shall be included in the Contract as if called for by both. Should the Drawings and Specifications be contradictory, the Drawings shall take precedence.

E. If directed by the Engineer, the Contractor shall, without extra charge, make reasonable modifications in the layout as needed to prevent conflict with work of other trades of for proper execution of the work.

F. Electrical symbols used on this project are shown in a Symbol List on the accompanying working drawings. This list shows standard symbols, and all may not appear on the project drawings; however, wherever the symbol on project drawings occurs, the item shall be provided and installed.

G. The Contractor shall keep a complete set of prints in good condition and on these shall indicate all field changes made. These prints shall be turned over to the Engineer at completion of the project.

1.08 WARRANTY

A. The Contractor shall provide a written certificate guaranteeing all labor, equipment, and materials furnished for the project to be free of defects for a period of one (1) year after the date of final test and acceptance. The Contractor shall remedy any defects within this period free of charge.

1.09 ARC FLASH/COORDINATION STUDY

A. The supplier of the paralleling switchgear is performing an Arc Flash and Short Circuit Coordination study, in accordance with IEEE-584 and NFPA 70E. The Contractor shall not be responsible for this effort.

PART 2 PRODUCTS

2.01 GENERAL REQUIREMENTS

A. All materials and equipment used on this project shall be new and of equal or greater quality than specified in the Drawings and Specifications.

B. All materials must conform to the standards set out in 1.04.D.

PART 3 EXECUTION

3.01 COOPERATION WITH OTHER TRADES

A. The Contractor shall cooperate with all other trades to ensure the general progress of the work. Allow other trades access for the installation of their work and storage of materials.

B. The Contractor shall schedule his work according to the master schedule and follow the general building construction closely.

C. The Contractor shall set all pipe and conduit sleeves, or install conduits and raceways where necessary, prior to the placement of masonry or the pouring of concrete.

D. The Contractor shall work with other trades on the placement of his equipment, such as conduits, fixtures, and outlets, to prevent interference with the installation of other work.

E. The Contractor shall not delay the work of other trades by failure to meet schedules as set by the Engineer.

3.02 CONSTRUCTION REQUIREMENTS

A. The locations and elevations of equipment shown on the Drawings are approximate and subject to slight revisions, if necessary, at the time the work is installed. Final locations should be confirmed with the Engineer in advance of construction. Minor changes in location shall be made at no cost by the Contractor.

B. The wiring for all electrical equipment shall be furnished and/or installed by the Contractor, unless otherwise noted, for equipment being furnished under another section of these Specifications. Request from the Engineer a shop drawing showing the required locations of facilities and connections.

C. No additional compensation will be provided for failure to examine the responsibility of other trades.

D. Holes for raceway penetration into sheet metal cabinets and boxes shall be made accurately with a hole punch. Cutting openings with a torch or other device will not be acceptable.

E. Raceway entry into equipment shall be carefully planned. Cutting of the enclosure framework to accommodate poorly planned raceways will not be acceptable.

F. Cabling inside equipment shall be carefully planned, routed, and laced. Cables shall be placed such that they do not cause obstruction.

G. Equipment shall be set level and plumb. Equipment shall be braced and secured for a rigid fit.

3.03 EQUIPMENT PROTECTION

A. Provide suitable protection for all equipment, work, and property against damage during construction.

B. The Contractor shall assume all responsibility for material and equipment stored at the site.

C. Conduit openings shall be closed with caps or plugs during construction. All outlet boxes will be kept free of concrete, plaster, and debris.

D. Equipment shall be covered and tightly sealed against the entrance of dust, dirt, and moisture.

E. Interiors of all electrical equipment shall be kept clean and dry prior to placing into service.

3.04 EXCAVATION AND BACKFILLING

A. The Contractor shall perform all excavation and backfilling necessary for the installation of the electrical system. The work shall include shoring and pumping in ditches to keep them dry until the work has been installed. All shoring required to protect the excavation and safeguard employees shall be properly performed according to code.

B. All excavations shall be made to the proper depth with allowances made for floor slabs, forms, beams, finished grades, etc. Ground under conduits shall be compacted prior to raceway installation.

C. All backfill shall be made with selected soil, free of rocks and debris. The backfill shall be mechanically tamped in 6-inch layers to secure a 90 percent (90%) density ratio.

D. All excavated material not suitable and not used in the backfill shall be removed to a disposal area as directed by the Engineer.

E. Field check and verify all locations of underground utilities prior to any excavating. In the event existing utilities are broken, they are to be repaired to the original condition.

F. Where the excavation requires the opening of existing walks, drives, or other existing equipment, these facilities shall be cut as required to facilitate the new construction. The sizes of the cut shall be kept to a minimum. After installation is complete, repair the existing walks, drives, or other pavement to original condition or to match the new installation.

3.05 CUTTING, PATCHING, AND CORE DRILLING

A. Cutting and patching required under this section shall be done in a workmanlike manner. Cutting lines shall be uniform and smooth.

B. Use concrete saws for large cuts in concrete and use core drills for small round cuts in concrete.

C. Where openings are cut through masonry walls, provide lintel or other structural supports to protect the existing masonry. Adequate support shall be provided during the cutting operation to prevent damage to the masonry.

D. Where openings are made through concrete walls below grade, the Contractor shall core drill the holes as required for the raceway penetration and shall utilize Link-Seals to make the conduit penetration watertight.

3.06 FLASHING

A. Provide waterproof flashing for each penetration of exterior walls and roofs.

B. Flashing for conduit penetrations through built-up roofs shall be made with patch panel filled full with pitch.

3.07 CLEAN-UP AND TEST

A. Remove all temporary labels, dirt, paint, grease, and stains from all exposed equipment. Upon completion of work, clean equipment, and the installation such as to produce a first class job suitable for occupancy. No loose or scraps of equipment shall be left at the site.

B. Repair any scars to paint with kits supplied by the manufacturer.

C. Clean interiors of each item of electrical equipment.

D. Test each service entrance cable, each feeder cable, and each branch circuit wire. The Contractor shall use a megohmeter, 1000V DC scale, for the test. The tests shall be made in the presence of the Engineer. The insulation value should be 500,000 ohms minimum to ground when tested with the megohmeter. Should the value be less, the faulty conductor shall be replaced and retested for compliance.

END OF SECTION

SECTION 16110

RACEWAYS AND BOXES

PART 1 GENERAL

1.01 DESCRIPTION OF WORK

A. Provide complete raceways systems, boxes, and fittings for all required electrical systems.

1.02 RELATED SECTIONS

A. Section 16000 – Electrical General Provisions

B. Section 16140 – Wiring Devices

C. Section 16195 – Electrical Identification

1.03 SUBMITTALS

A. Submit in accordance with 01300, Submittals for all products.

1.04 STANDARDS

A. Except as modified by governing codes and by the Contract Documents, comply with the latest applicable provisions and latest recommendations of the following:

1. Sealtite Liquidtight Flexible Metallic Conduit (LFMC)

    a. UL Standard UL-360
    b. NEMA Standard RV 3

2. Non-Metallic Conduit (PVC)

    a. UL Standard UL-651
    b. NEMA Standard TC-2

3. PVC Coated Rigid Conduit (CGRS)

    a. NEMA Standard RN 1
    b. UL Standard UL-6

4. Rigid Aluminum Conduit (RAC)

    a. ANSI C80.5
    b. UL Standard UL-6A

PART 2 PRODUCTS

2.01 RACEWAY TYPES

A. PVC Coated Galvanized Rigid Steel Conduit (CRSC) shall conform to NEMA RN 1.

1. Acceptable manufacturers shall be Perma-Cote or Robroy.

2. CRSC and fittings shall meet all of the performance standards specified herein and such performance standards shall require verification by a nationally recognized testing agency including American Society for Testing and Materials (ASTM) and Underwriter Laboratories (UL).

3. CRSC shall be UL Listed. The PVC coating shall have been investigated by UL as providing the primary corrosion protection for the rigid metal conduit. Ferrous fittings for general service locations shall be UL Listed with PVC as the primary corrosion protection. Hazardous location fittings, prior to plastic coating shall be UL Listed. All conduits and fittings must be new, unused material. Applicable UL standards shall include UL 6 Standard for Safety, Rigid Metal Conduit, UL514B Standard for Safety, Fittings for Conduit and Outlet Boxes.

4. CRSC shall be Electrical Testing Laboratory (ETL) verified to the Inertek ETL SEMKO High Temperature H2O PVC Coating Adhesion Test Procedure for 200 hours. CRSC shall be the ETL Verified PVC-001 label to signify compliance to the adhesion performance standard.

5. CRSC shall be hot dip galvanized inside and out with hot galvanized threads.

6. A PVC sleeve extending one (1) pipe diameter or 2 inches, whichever is less, shall be formed at every female fitting opening except unions. The inside sleeve diameter shall be matched to the outside diameter of the conduit.

7. The PVC coating on the outside of the conduit couplings shall have a series of longitudinal ribs 40 mils in thickness to protect the coating form tool damage during installation.

8. Form 8 condolets, 1/2-inch through 2-inch diameters, shall have a v-seal tongue-in-groove gasket to effectively seal against the elements. The design shall be equipped with a positive placement feature to ease and assure proper installation. Certified results confirming seal performance at 15 psig (positive) and 25 inches of mercury (vacuum) for 72 hours shall be available. Form 8 condolets shall be supplied with plastic encapsulated stainless steel cover screws.

9. A urethane coating shall be uniformly and consistently applied to the interior of all conduit and fittings. The internal coating shall be nominal 2 mil thickness. Conduit or fittings having areas with thin, or no coating shall be unacceptable.

10. The PVC exterior and urethane interior coatings applied to the conduit shall afford sufficient flexibility to permit field bending without cracking or flaking at temperatures above 30F.

11. All male threads on conduit, elbows, and nipples shall be protected by application of a urethane coating.

12. All female threads on fittings or conduit couplings shall be protected by application of a urethane coating.

13. Independent certified test results shall be available to confirm coating adhesion under the following conditions:

    a. Conduit and condolet exposure to 150F and 95 percent (95%) relative humidity with a minimum mean time to failure of 30 days (ASTM D1151).

    b. The interior coating bond shall be confirmed using the Standard Method of Adhesion by Tape Test (ASTM D3359).

    c. No trace of the internal coating shall be visible on a white cloth following six (6) wipes over the coating which has been wetted with acetone (ASTM) D1308).

    d. The exterior coating bond shall be confirmed using the methods described in Section 3.8, NEMA RN1. After these tests the physical properties of the exterior coating shall exceed the minimum requirements specified in Table 3.1, NEMA RN1.

14. Right angle beam clamps and U bolts shall be specially formed and sized to snugly fit the outside diameter of the coated conduit. All U bolts will be supplied with plastic encapsulated nuts that cover the exposed portions of the threads.

B. Sealtitie Liquidtight Flexible Steel Conduit (LFMC)

1. Conduit shall be equal to Anaconda SEALTITE® Type UA or approved equal. Conduit shall provide a flexible liquid-tight raceway for wiring and shall be constructed of continuously interlocked hot dipped zinc galvanized steel core with an integral bonding wire in sizes 3/8-inch thru 1¼-inch. Conduit shall have a sunlight resistant and flame-retardant PVC jacket in electrical trade sizes 3/8-inch thru 4-inch. Conduit shall be UL listed, CSA certified, and IP 66/67 rated when installed with approved end fittings.

2. Maximum length: 6 feet

C. Non-Metallic Raceway (PVC)

1. Composed of polyvinyl chloride suitable for 90 degrees C.

2. Raceway, fittings, and cement must be produced by the same manufacturer who must have had a minimum of ten (10) years' experience in manufacturing the products.

3. Materials must have a tensile strength of 7,000-7,200 psi at 73.4 degrees F., flexural strength of 12,000 psi and compressive strength of 9,000 psi.

4. All joints shall be solvent cemented in accordance with the recommendations of the manufacturer.

D. Aluminum Conduit

1. 6063 alloy, T-1 temper

2. Color coded thread protectors

2.02 LOCKNUTS AND BUSHINGS

A. Locknuts shall be aluminum.

B. All bushings shall be insulated. Use nylon insulated metallic bushings for sizes 1-inch and larger. Plastic bushings may be used in 1/2-inch and 3/4-inch sizes.

2.03 CONDUIT BOXES, OUTLET BOXES, CONDUIT FITTINGS

A. Cast Type Conduit Boxes, Outlet Bodies and Fittings

1. Provide surface mounted outlet and junction boxes, in indoor locations, where exposed to moisture and in outdoor locations.

2. Use cast aluminum FS or FD boxes.

3. Use cast aluminum conduit bodies and fittings.

4. All covers shall be aluminum.

5. Exterior devices shall be PVC coated.

B. PVC Conduit Boxes, Outlet Bodies and Fittings

1. Provide surface mounted PVC outlet and junction boxes, in indoor locations, where indicated on the Drawings for exposure to corrosive chemicals.

PART 3 EXECUTION

3.01 APPLICATION OF RACEWAYS

A. The following applications must be adhered to except as otherwise required by Code. Raceways not conforming to this listing must be removed by this Contractor and replaced with the specified material at this Contractor's expense.

1. CRSC – Application: Used for exterior and interior installations where noted, and elbows/vertical risers from below grade to above grade. CRSC shall be utilized within 5-foot under a change in surface material. The Contractor must utilize special dies specifically manufactured for CRSC when cutting and threading CRSC conduit. Dies used for standard RSC are not acceptable.

2. LFMC – Applications: Use in areas at connections to all motors and control devices, and all raised floor areas.

3. PVC – Applications: Schedule 40 – Where specifically indicated on the drawings and for raceways in slab or below grade. Schedule 80 – Where specifically indicated on the drawings and for above grade installations in chemical use locations.

4. RAC – Application: Use in all above grade indoor installations and outdoor installations except where explicitly noted.

3.02 CRSC INSTALLATION

A. All clamping, cutting, threading, bending, and assembly instructions listed in the manufacturer installation guide shall be vigorously followed.

B. Installation of CRSC shall be performed in accordance with the manufacturer installation manual. To assure correct installation, the installer shall be certified by the manufacturer to install coated conduit.

C. Installer certification is required to be provided to the Engineer prior to construction.

D. Clamps, bolts, angles, pipe straps, struts, rods, nuts, and other supporting products for CRSC shall be PVC coated or stainless steel.

E. The Contractor shall use equipment specifically designed for CRSC when cutting, clamping, reaming, threading, bending, assembling, or performing other installation procedures. PVC coating shall be protected at all times.

F. Touch-up compound for CRSC shall not be allowed. All conduits with damaged coatings shall be removed and replaced at no cost to the Owner.

3.03 RACEWAY SYSTEMS IN GENERAL

A. Provide raceways for all wiring systems, including security, data transmission, paging, and low voltage.

B. Install capped bushings on raceways as soon as installed and remove only when wires are pulled. Securely tie embedded raceway in place prior to embedment. Lay out the work in advance to avoid excessive concentrations of multiple raceway runs.

C. Locate raceways so that the strength of structural members is unaffected, and they do not conflict with the services of other trades. Install 1-inch or larger raceways, in or through structural members (beams, slabs, etc.) only when and in the manner accepted by the Engineer. Draw up couplings and fittings full and tight.

D. Above-grade raceways to comply with the following:

1. Install raceways concealed except at surface cabinets and for motor equipment connection in electrical and mechanical rooms. Install a minimum of 6 inches from flues, steam pipes, or other heated lines. Provide flashing and counterflashing for waterproofing of raceways, outlets, fittings, etc., which penetrate the roof. Route exposed raceways parallel or perpendicular to building lines with right-angle turns and symmetrical bends. Run concealed raceways in a direct line and, where possible, with long sweep bends and offsets. Provide sleeves in forms for new concrete walls, floor slabs, and partitions for passage of raceways. Waterproof sleeved raceways where required.

2. Raceways shall not be run on roofs or exposed on the outside of the buildings unless specifically noted as exposed on the drawings or approved by the Engineer.

3. Provide raceway expansion joints for exposed and concealed raceways with necessary bonding conductor at building expansion joints and between buildings or structures and where required to compensate for raceway or building thermal expansion and contraction.

4. Provide raceway installation (with appropriate seal-offs, explosion-proof fittings, etc.) in special occupancy area, as required. Provide conduit seal-offs where portions of an interior raceway system pass through walls, ceiling, or floors that separate adjacent rooms having substantially different maintained temperatures, as in refrigeration or cold storage rooms.

5. Provide pull string in spare or empty raceways. Allow 5 feet of slack at each end, and in each pull box. Tie each end of the string to a washer or equivalent that does not fit into the conduit. Tag both ends of string denoting opposite end termination location.

E. No raceway may be installed in a concrete slab or members except with the permission of the Structural Engineer and with the written consent of the Owner.

1. Conduits embedded in structural concrete slabs shall have an outside diameter less than one third of the thickness of the concrete slab and shall be installed entirely within the center one third of the concrete slab.

2. Raceways embedded in concrete slabs shall be spaced not less than 8 inches on centers and as widely spaced as possible where they converge at panels or junction boxes.

3. In no case will installation of raceways be permitted to interfere with the proper placement of principal reinforcement.

4. Raceways running parallel to slab supports, such as beams, columns, and structural walls, shall be installed not less than 12 inches from such supporting elements.

5. To prevent displacement during concrete pour of lift slab, saddle supports for conduit, outlet boxes, junction boxes, inserts, etc., shall be secured with suitable adhesives.

F. Non-metallic raceway installation shall conform to the following:

1. All joints are to be made by the solvent cementing method using the material recommended by the raceway manufacturer. To ensure good joints, components shall be cleaned prior to assembly.

2. Raceway cut-offs shall be square and made by handsaw or other approved means which does not deform the conduit. Raceway shall be reamed prior to solvent cementing to couplings, adapters, or fittings.

3. Electrical devices that are served by PVC raceways shall be grounded by means of a ground wire pulled in the raceway.

4. Bends shall be made by methods that do not deform or damage the conduit. The radii of field bends shall not be less than those established by the N.E.C.

5. Raceway expansion fittings shall be provided where necessary. The position of the expansion fitting shall be adjusted proportional to the temperature at installation.

6. Raceway supports shall be installed, in such a manner, to allow the PVC conduit to slide through the supports as the temperature changes.

G. Raceways in hung ceiling shall be run on and secured to slab or primary structural members of ceiling, not to lathing channels or T-bars, Z-bars, or other elements which are the direct supports of the ceiling panels. Secure conduit firmly to steel by clips and fittings designed for that purpose. Install as high as possible, but not less than 1-foot 0-inch above hung ceilings.

H. Exposed raceways shall be run parallel or at right angles with building lines. Secure raceway clamps or supports to masonry materials by toggle bolts, expansion bolts, or steel inserts. Install raceway on steel construction with approved clamps that do not depend on friction or set screw pressure alone.

I. Clear raceway of all obstructions and dirt prior to pulling in wires or cables. This shall be done with ball mandrel (diameter approximately 85 percent (85%) of conduit inside diameter) followed by close fitting wire brush and wad of felt, or similar material. This assembly may be pulled in together with, but ahead of, the cable being installed. All empty raceways shall be similarly cleaned. Clear any raceway, which rejects ball mandrel.

J. Support raceways at intervals no greater than ten (10) feet and with one (1) support within three (3) feet of each coupling, box, fitting, or outlet box. Provide one (1) support within three (3) feet of each elbow or bend.

3.04 CONDUIT BOXES, OUTLET BOXES, CONDUIT FITTINGS

A. Provide boxes and fittings as indicated on the drawing and required for the complete installation of the various electrical systems, and to facilitate proper pulling of wires and cables. J-boxes and pull boxes shall be sized per electrical code minimum. Boxes on empty conduit systems shall be sized as if containing conductors of #4 AWG.

B. Install boxes and covers for wiring devices so that the wiring devices will be installed with a vertical orientation unless otherwise noted on the drawings.

C. The exact location of outlets and equipment is governed by structural conditions and obstructions or other equipment items. When necessary, relocate outlets so that when fixtures or equipment are installed, they will be symmetrically located according to the room layout and will not interfere with other work or equipment. Verify final location of outlets, panels equipment, etc. with Engineer.

D. Back-to-back outlets in the same wall or “thru-wall” type boxes not permitted. Provide 12-inch (minimum) spacing for outlets shown on opposite sides of a common wall to minimize sound transmission. Provide 24-inch (minimum) horizontal spacing for outlets shown on opposite sides of a fire rated wall to maintain fire rating.

END OF SECTION

THIS PAGE INTENTIONALLY LEFT BLANK

SECTION 16111

ELECTRICAL HANDHOLES

PART 1 GENERAL

1.01 SCOPE OF WORK

A. Provide and install electrical handholes as indicated in the Specifications and Drawings.

B. Where embedded in outside of concrete paving or sidewalks, provide concrete collars as shown on the Drawings to prevent settling and damage to raceways.

1.02 RELATED SECTIONS

A. Section 16000 – Electrical General Provisions

B. Section 16110 – Raceways and Boxes

1.03 SUBMITTALS

A. Submit in accordance with 01300 for all products.

PART 2 PRODUCTS

2.01 MANUFACTURER

A. Electrical handholes shall be Quazite as manufactured by Strongwell or equal.

2.02 PROPERTIES

A. Boxes and covers shall be concrete gray and sustain a minimum vertical test load of 15,000 pounds.

B. All covers will have a minimum coefficient of friction of .50.

C. Boxes will be constructed of polymer concrete. Plastic and fiberglass boxes will not be accepted.

D. Boxes shall be stackable for extra depth for 480V and lower voltage handholes. Boxes shall be single piece for 15kV.

E. Enclosures, boxes, and covers are required to conform to all test provisions of ANSI/SCTE 77 for Tier 5 applications.

F. The electrical handholes shall be UL Listed.

G. The electrical handholes shall meet the requirements of section 314.30 of NEC 70 – 2005.

PART 3 EXECUTION

3.01 GENERAL

A. Handholes will be installed approximately where shown on the Drawings with the sizes shown. The exact location of each handhole shall be determined after careful consideration has been given to location of other utilities. The cover plate shall be engraved “Electric”.

B. Handholes shall have reinforced concrete collar which shall be poured around the box extensions as shown on the Drawings for handholes outside of concrete paving or sidewalks. 480V and lower voltage cables inside the box shall be installed with at least one foot of slack within the box. No cable or wire splices will be allowed in the handholes.

END OF SECTION

SECTION 16120

WIRE AND CABLE

PART 1 GENERAL

1.01 SCOPE OF WORK

A. The Contractor shall provide under this section of the Specifications all materials, labor, equipment, tools, and supplies for the installation of wire and cable for a complete installation.

1.02 RELATED SECTIONS

A. Section 16110 – Raceways and Boxes

1.03 SUBMITTALS

A. Submit in accordance with 01300, Submittals, including the following minimum information:

1. Manufacturer product data

PART 2 PRODUCTS

2.01 GENERAL

A. Wire and cable shall meet all standards and specifications applicable and shall be in conformance with the latest edition of the NEC. Insulated wire and cable shall have size, type of insulation, voltage and manufacturer's name permanently marked on outer covering at regular intervals not exceeding four feet. Wire and cable shall be delivered in complete coils or reels with identifying tags, stating size, type of insulation, etc.

B. Wire and cable shall be suitably protected from weather and other damage during storage and handling and shall be in first-class condition after installation.

C. Wire sizes shall be No. 12 AWG minimum, except as specified for control and instrumentation circuits.

D. Conductors shall be 98 percent (98%) conductivity soft drawn copper, ASTM B8 for stranded conductors.

E. Wire and cable shall be factory color-coded with a separate color for each phase and neutral used consistently throughout the system. The color code below shall be used unless otherwise specified:

Phase	480Y/277V	240/208/120V	24VDC
A	Brown	Black	Blue (Positive)
B	Orange	Red	Blue with White Stripe (Negative)
C	Yellow	Blue	
N	Gray	White	
G	Green	Green	

F. Control conductors shall be colored red for 120V circuits with white for neutral. Control conductors shall be colored blue for low voltage DC circuits, 24 volts and below. Yellow conductors shall be used for separately powered control circuits entering a control enclosure.

G. All conductors shall be rated 600 volts, unless otherwise specified or shown on the drawings, or for electronic or communication use.

2.02 BUILDING WIRE

A. NEC type THHN/THWN shall be used for lighting, receptacles, and all circuits not exceeding 600 volts to ground.

B. THHN/THWN conductors sizes #1/0 and larger shall be rated for cable tray installation.

2.03 CONTROL WIRE

A. Control wire contained within a single building shall be NEC type THHN/THWN, stranded No. 14 or No. 16 AWG.

B. Control wire within control panels shall be NEC type MTW stranded No. 16 AWG.

2.04 SHIELDED CABLE

A. Two conductor shielded cable, rated for cable tray installation, with two (2) No. 18 AWG stranded conductors, 300-volt PVC insulation, 105C rating, with 100% mylar tape and drain wire shielding. Color code shall be white for positive, and black for negative.

B. Three conductor shielded cable, rated for cable tray installation, with three (3) No. 18 AWG stranded conductors, 300-volt PVC insulation, 105C rating, with 100% mylar tape and drain wire shielding. Color code shall be red for source, white for positive, and black for negative

2.05 CONNECTORS

A. Joints on branch circuits shall occur only where such circuits divide as indicated on plans and shall consist of one through circuit to which shall be spliced the branch from the circuit. No splices shall be made in conductor except at outlet boxes, junction boxes, or splice boxes.

B. All joints or splices for #10 AWG or smaller shall be made with UL approved wire nuts or compression type connectors.

C. All joints or splices for #8 AWG Building Wire or larger shall be made with a Polaris Black IT or IPL insulated connector or approved equal. All joints or splices at electric motor junction box connections shall be made with a Polaris Gray ITG insulated connector for finely stranded wire or approved equal. The connector shall be UL approved.

PART 3 EXECUTION

3.01 INSTALLATION

A. All wire and cable shall be continuous from origin to panel or equipment termination without splices unless otherwise specified. No splices shall be allowed in handholes below grade.

B. No more than two conductors shall be installed under terminals for control and instrumentation.

3.02 TESTING

A. Test all 480 volt circuits with a megohm meter after installation. Submit a written report to the Engineer. Tests shall be performed at 1000 volts.

END OF SECTION

THIS PAGE INTENTIONALLY LEFT BLANK

SECTION 16125

MEDIUM VOLTAGE CABLE AND ACCESSORIES

PART 1 GENERAL

1.01 SCOPE OF WORK

A. The Contractor shall provide under this section of the Specifications all materials, labor, equipment, tools, and supplies for the installation of medium voltage cable and accessories for a complete installation.

B. Terminations of medium voltage cable is required for both overhead power lines, switchgear bus, and transformer load break elbows.

1.02 RELATED SECTIONS

A. Section 16110 – Raceways and Boxes

1.03 SUBMITTALS

A. Submit in accordance with 01300, Submittals, including the following minimum information:

1. Manufacturer product data

PART 2 PRODUCTS

2.01 15kV CABLE

A. 15kV cable shall be MV-105 with 133% insulation level, single conductor with concentric 33% neutral. The cable size shall be #4/0 for the project.

B. Conductor shall be soft-annealed copper Class B stranding.

C. Insulation shall be thermoset Ethylene Propylene Rubber (EPR).

D. Concentric neutral shall be soft-annealed solid copper wires.

E. Conductor shield shall be cross-linked polyethylene (XLPE).

F. The category jacket shall be black, sunlight resistant, linear low density polyethylene (LPDE) encapsulating the concentric neutral wires.

G. The cable shall be rated for underground primary cable for commercial and industrial distribution circuits, suitable for use in wet or dry locations, installed in underground ducts or direct buried, meeting ICEA S-94-649; T-31-610; T-34-664.

2.02 ACCESSORIES

A. For connection to overhead power lines, see the photo detail on Sheet E-02 for a depiction of these required accessories:

1. The Contractor shall supply and install a 4" PVC Schedule 80 riser conduit up the pole. The conduit shall be secured with a 10.5" standoff riser bracket every eight (8) feet. The conduit shall terminate at approximately 6" below the horizontal utility neutral conductor.

2. The Contractor shall provide and install two (2) fiberglass brackets for three phase two position mounting of the lightning arrestors and cable potheads onto existing poles. The bracket will be two position, three phase, 36" end to end length, 18" arm length, with 12" spacing between the phase positions. The bracket shall be similar or equal to Hubbell CHANCE 3SBM3618CT.

3. The Contractor shall provide and install two (2) Three Phase Curved Equipment Mounting Bracket onto existing poles, 2 Position Horizontal Fittings, 48" End to End Spacing for mounting the cutouts below the overhead power lines. The bracket shall be similar or equal to Hubbell CHANCE CR3CA48.

4. The Contractor shall provide and install six (6) lightning/surge arrester rated at 9kV 7.65 MCOV. Include the arresters in a kit including line and load cable, polymer wildlife arrester guard, and hot/neutral cable clamps.

5. The Contractor shall provide and install six (6) pothead cable connections for #4/0 cable with cold-shrink terminator kit similar or equal to 3M 5642. The pothead connections shall include two-hole compression lug connectors and jumper cables to the cutouts. The pothead connections shall include hot/neutral clamps.

6. The Contractor shall supply and install six (6) 15kV/125kV BIL loadbreak polymer cutouts with 300A straight blade similar or equal to ARP LC NL 15AP300 with mounting hardware to the bracket specified above.

7. The Contractor shall supply and install hot line stirrups similar or equal to McLean Power Systems HLS-397-E with hot line clamps similar or equal to Hubbell S1530 for all tap connections to the overhead power lines.

B. For connection to switchgear bus, provide and install pothead cable connections for #4/0 cable with cold-shrink terminator kit similar or equal to 3M 5642. The pothead connections shall include two-hole compression lug connectors. The pothead connections shall include hot/neutral compression lug connectors to switchgear ground bus.

C. For connection to the existing pad mount standby generator step-up transformer, provide and install three (3) 15kV 200A load break elbows, sized to match the #4/0 cable diameter, similar or equal to Hubbell 215LE series.

PART 3 EXECUTION

3.01 INSTALLATION

A. All 15kV cable shall be continuous from origin to switchgear termination. All 15kV cable enters the switchgear building through electrical handholes and conduits under the footings, with long sweep 4" PVC Schedule 80 elbows and risers.

END OF SECTION

THIS PAGE INTENTIONALLY LEFT BLANK

SECTION 16140

WIRING DEVICES

PART 1 GENERAL

1.01 SCOPE OF WORK

A. Furnish and install wiring devices as shown on the Drawings and specified herein in compliance with the NEC. Furnish and install wiring devices suitable for the temperature, conditions, and location where installed.

1.02 QUALITY ASSURANCE

A. Wiring devices shall be of specification grade as manufactured by Arrow-Hart, Crouse-Hinds, Hubbell, General Electric, or approved equal, and shall be UL listed.

PART 2 PRODUCTS

2.01 WALL SWITCHES

A. Wall switches shall be general duty, totally enclosed with bodies of phenolic compound, butt compact, with an integral mounting strap with provisions for side wiring with captively held binding screws. The following switches shall be used. Where installed in treatment process areas, the switches shall be installed with weatherproof covers for operating toggle switches, similar or equal to Cantex 5133330 into the cast aluminum FD or FS boxes. Switches with weatherproof covers are designated with an M on the project drawings.

Single Pole Switch	Hubbell 1221 or equal
Double Pole Switch	Hubbell 1222 or equal
Three-Way Switch	Hubbell 1223 or equal
Four-Way Switch	Hubbell 1224 or equal

2.02 RECEPTACLES

A. General duty receptacles shall be two pole, three wire grounding, 20 amp, 125 volts. NEMA configuration 5-20R shall be used unless otherwise specified. The following receptacles shall be used. Where installed in treatment process areas, the receptacles shall be provided with weatherproof while-in-use covers, similar or equal to Pass & Seymour WIUC series or T&B Red Dot. All receptacle boxes shall be cast aluminum FD or FS.

Duplex Receptacle	Hubbell 5362 or equal
Duplex Receptacle-GFI	Hubbell GF5362 or equal
Single Receptacle	Hubbell 5361 or equal

B. Special receptacles are as shown and detailed on the Drawings.

PART 3 EXECUTION

3.01 GENERAL

A. Coordinate switch and receptacle mounting location with detail and heights as noted on the Drawings.

B. Provide ivory switches, unless specifically noted otherwise.

C. Furnish device plates to match the wiring device used. Device plates shall be on piece type, single or multiple gang switch and duplex outlet wall plates for wiring devices.

D. Test all wiring devices to ensure electrical continuity of ground connections.

END OF SECTION

SECTION 16195

ELECTRICAL IDENTIFICATION

PART 1 GENERAL

1.01 SCOPE OF WORK

A. Provide and install electrical identification materials to allow ease of future troubleshooting and maintenance.

PART 2 PRODUCTS

2.01 WIRE LABELS

A. All wires shall be marked with durable, non-fading, sleeve type, heat shrink wire markers or laser printer wraparound labels with clear wrap protecting the printed section.

B. The Contractor shall use the unique wire label numbers supplied by the switchgear equipment to label each end of the wiring connection from the equipment to the control system. No interim numbers shall be allowed.

C. All building power circuit wires will be labeled. Home runs to panelboards will be labeled as to the circuit number at the panelboard, such as PP3-1.

D. The Contractor will submit a list of all proposed wire numbers for review and approval.

E. The Contractor shall utilize control terminal designations as the wire label number. Where source and end terminals do not match, the wire label shall include the equipment and terminal numbers for source and destination terminations.

2.02 EQUIPMENT NAMEPLATES

A. Provide an engraved phenolic nameplate (white background with black letters) with 1/8-inch engraved letters for each panelboard, MCC, VFD, starter bucket, disconnect switch, control station, junction box, actuators, field instruments, motors, and all other equipment not mentioned specifically.

B. Provide an engraved phenolic nameplate with 1/16-inch engraved letters for each receptacle or lighting outlet indicating the panelboard circuit serving the device.

C. The Contractor will submit a list of all proposed nameplates for review and approval.

PART 3 EXECUTION

3.01 GENERAL

A. Attach all nameplates with self-tapping corrosion resistant screws.

B. Wire labels should be attached in a common direction in all equipment.

END OF SECTION

SECTION 16200

ELECTRIC UTILITY SERVICE

PART 1 GENERAL

1.01 SCOPE OF WORK

A. Ozarks Electric Cooperative provides electrical service to the Noland WWTP. The plant is metered across the road from the overhead line entrance. The plant also maintains a connection to a large solar generation field with overhead conductors that also terminate near the Ozarks utility metering. No changes are proposed for the utility service.

B. The Contractor shall coordinate any required utility shutoff and reconnect for equipment installation with Ozarks Electric.

PART 2 PRODUCTS (NOT USED)

PART 3 EXECUTION (NOT USED)

END OF SECTION

THIS PAGE INTENTIONALLY LEFT BLANK

SECTION 16220

DUAL PURPOSE DOCKING STATION

PART 1 GENERAL

1.01 SCOPE OF WORK

A. Furnish and install a Dual Purpose Docking Station (DPDS), rated at 480/277V, three poles with solid neutral, 3000 Amps 100% UL rated, NEMA 3R Outdoor Enclosure. The DPDS shall consist of a single circuit breaker system that allows quick connection of a load bank or portable generator through the use of quick connect cams and cables. The DPDS shall include a key interlock with the permanent generator and the DPDS portable generator cable access door. The circuit breaker will isolate the permanent standby generator. The DPDS shall be free standing and will replace an existing switchboard.

1.02 REGULATORY REQUIREMENTS

A. The DPDS and all components shall be designed, manufactured and tested in accordance with the latest applicable standards of UL and NEMA as follows:

1. UL 1008 – Transfer Switches
2. NFPA 70 – National Electrical Code
3. UL 489 – Circuit Breakers

1.03 SUBMITTALS

A. Submit in accordance with Specification Section 01300, Submittals.

B. The following information shall be submitted to the Engineer for Review/Approval:

1. Front view and plan view of the assembly
2. Schematic diagram
3. Conduit space locations within the assembly
4. Assembly ratings including:

    a. Withstand and Closing rating
    b. Voltage
    c. Continuous current rating
    d. Short-Time rating if applicable

5. Cable terminal sizes
6. Product Data Sheets.

1.04 WARRANTY

A. The DPDS shall be warranted to be free from defects in materials and workmanship for a period of one year from the date of completion and acceptance by the Owner.

PART 2 PRODUCTS

2.01 MANUFACTURERS

A. The DPDS shall be similar or equal to the Dual Connect -1 by ESL Power Systems, Series 8130.

2.02 DUAL PURPOSE DOCKING STATION

A. The single breaker DPDS shall consist of (1) molded case circuit breakers for connection of the permanent standby generator, male cam-style inlet connectors for a portable standby generator, and female cam-style outlet connectors for a load bank connection. Power distribution blocks and grounding terminals shall be provided for all incoming and outgoing power connections.

B. The DPDS shall include a key interlock between the permanent generator circuit breaker and the access panel for the portable generator connection.

C. The DPDS enclosure shall be Type 3R, constructed of continuous seam-welded, powder coated galvanneal steel or stainless steel per the drawings. The main access shall be through a hinged door that extends the full height of the enclosure. Access for both portable generator cables with female cam-style plugs and for load bank cables with male cam-style plugs shall be via a hinged lower flap door. Hinged flap door shall be provided to cover the cable openings when cables are not connected; the hinged flap door shall allow cable entry only after the main access door has been opened. Enclosure shall be powder coated after fabrication; color shall be wrinkle gray RAL 7035.

D. Cam-style male connectors (inlets) and cam-style female connectors (outlets) shall be UL Listed single-pole separable type and rated 400 amps at 600VAC. All cam-style connectors shall be color coded. Cam-style connectors shall be provided for each phase and for ground, and shall also be provided for neutral (if required). Each of the phase cam-style connectors and the neutral cam-style connectors within the enclosure shall be factory-wired. The ground cam-style male connectors shall be bonded to the enclosure, and a ground lug shall be provided for connection of the facility ground conductor.

E. Termination lugs shall be provided for line and load side field wiring.

F. Molded case circuit breakers shall be UL Listed 3-pole and the short circuit interrupt rating shall be a minimum of 65kAIC at 480VAC. The breaker shall be a UL 100% rated unit and include an LSIG Power trip unit.

G. The DPDS shall include a phase monitor and remote start 3-point terminal block.

PART 3 EXECUTION

3.01 GENERAL

A. DPDS shall be installed as shown on the drawings and per the manufacturer’s written instructions. In addition, the installation shall meet the requirements of local codes, the National Electrical Code and National Electrical Contractors Association’s “Standard of Installation”.

B. Conduit entry into the DPDS shall be by Contractor through the underground access raceway area as shown on the manufacturer drawings. The Contractor shall furnish and install listed watertight conduit hubs, as manufactured by MYERS or T&B, for any above ground conduit entry. Hubs shall be properly installed and tightened to maintain Type 3R integrity of the 3-way manual transfer switch enclosure.

C. The Contractor shall terminate feeder conductors, load conductors and ground per the manufacturer's instructions. All field wiring terminations shall be torqued as required per the instructions on the DPDS power distribution blocks, circuit breakers & ground lugs.

3.02 FIELD TESTING

A. Prior to energizing DPDS, the Contractor shall perform the following checks and tests as a minimum:

1. Verify mounting and connections are complete and secure.
2. Verify internal components and wiring are secure.
3. Perform continuity check of all circuits.
4. Perform 1,000 VDC megger test on feeder, load and ground cables.
5. Verify deadfront is secure.
6. Confirm operation of the DPDS ground receptacle by attaching a plug to the 3-way manual transfer switch ground receptacle and then verify that the plug is grounded to the facility ground.

END OF SECTION

THIS PAGE INTENTIONALLY LEFT BLANK

SECTION 16250

GROUNDING AND BONDING

PART 1 GENERAL

1.01 SCOPE OF WORK

A. Furnish and install grounding systems in compliance with NEC Article 250.

B. Supplemental grounding shall be installed as shown on the Drawings for grounding of equipment.

1.02 SUBMITTALS

A. Submit in accordance with Specification Section 01300, Submittals for all equipment and materials specified herein.

PART 2 PRODUCTS

2.01 ELECTROLYTIC GROUNDING ELECTRODE SYSTEM

A. The primary grounding electrode shall be a chemical ground rod using electrolytically enhanced grounding where shown on the Drawings.

B. The ground rod shall operate by hygroscopically extracting moisture from the air to activate the electrolytic process.

C. The ground rod system shall be UL Listed.

D. The ground rod system shall be 100 percent (100%) self-activating and sealed. No additions of chemical or water solutions shall be required.

E. The electrolytic grounding system shall be similar and equal to the system manufactured by Erico ECRH102G4U.

F. All copper ground rod shall consist of a 2-inch nominal diameter hollow copper tube with a wall thickness of not less than .083-inch. The tube shall be permanently capped on the top and bottom. Air breather holes shall be provided in the top of the tube and drainage holes shall be provided in the bottom of the tube for electrolyte drainage into the surrounding soil.

G. The ground rod shall be L shaped, 10 feet long, for horizontal installation.

H. A stranded 4/0 AWG copper pigtail connection shall be exothermically welded to the side of rod for ground wire termination and for use as test point.

I. Provide a precast concrete box with slots for conduit entrances, approximately 10 inches in diameter by 12 inches high. Provide a cast iron grate flush cover with “Breather” slots.

J. Provide natural volcanic, non-corrosive form of bentonite clay grout backfill material free of polymer sealants.

K. The backfill material shall absorb approximately 14-gallons of water per 50-pound bag for optimal 30 percent (30%) solids density.

L. The backfill shall have a pH value of 8-10 with a maximum resistivity of 3 ohms/meter at 30 percent (30%) solids density.

2.02 CONCRETE ENCASED ELECTRODE

A. Concrete encased electrodes shall be provided where shown for supplemental equipment grounding.

B. The grounding electrode conductor for the concrete encased electrode shall be #4/0 bare copper. The conductor shall be installed in a 1-inch PVC SCH 40 conduit for protection during construction and slab pour. Exothermic weld the conductor to the building footing rebar.

2.03 GROUNDING RING

A. Provide and install a #4/0 bare copper grounding ring, encircling the building, with exothermic weld connections to the electrolytic ground rod, with a #4/0 pigtail to the switchgear ground bus.

2.04 GROUND CONNECTIONS AND BONDING

A. All conductor to conductor, conductor to ground rod and conductor to structure connections of #6 AWG and larger sized conductors shall be permanent exothermic welded connections. All grounding connections to equipment shall use bolted lugs.

B. All connections of #8 AWG and smaller and all connections to conduit, equipment or other items where the ground conductor must be removable shall be made using mechanical connections.

C. All mechanical ground connectors shall be UL listed.

D. All separately derived voltages shall be bonded to the service ground.

PART 3 EXECUTION

3.01 GENERAL

A. The Contractor shall provide a permanent and continuous grounding path for all circuits and equipment of all system neutrals at the service disconnect. The path must be of sufficient capacity to safely transmit available fault current.

B. The main grounding electrodes shall be the electrolytic ground rod kit. Install per manufacturer's recommendations.

C. Equipment grounding conductors shall be included for all circuits and mechanically bonded.

D. Where shown on the Drawings, connect to ductile iron pipe, building steel, and reinforcing steel as supplementary grounding electrodes.

E. Where buildings are fed from separate structures, the neutral conductor shall not be bonded to the local ground bus.

F. Certified measurements shall be taken and submitted prior to connection of the main service utility to ground. The ground grid resistance shall not exceed 10 ohms. The testing shall utilize an earth resistance meter and be conducted in accordance with the IEEE Standard 3-point fall of potential method or stakeless method monitoring ground current.

END OF SECTION

THIS PAGE INTENTIONALLY LEFT BLANK

SECTION 16320

PAD-MOUNTED LIQUID-FILLED TRANSFORMERS

PART 1 GENERAL

1.01 SCOPE OF WORK

A. Provide and install a 150 kVA pad-mounted liquid-filled transformer for the switchgear building service. Construct the transformer foundation and all primary and secondary conduit/cable.

1.02 REFERENCES

A. ANSI/NFPA 70 - National Electrical Code

B. Institute of Electrical and Electronic Engineers (IEEE)

C. National Electrical Manufacturers Association (NEMA)

D. American National Standards Institute, Inc. (ANSI)

1.03 SUBMITTALS

A. Submit in accordance with 01300.

B. The outline drawings shall be completely dimensioned and, as a minimum, show the following:

1. Plan, and all elevations, including clearance for bushing and core and coil removal.

2. High voltage and low voltage bushing details.

3. Location of all handholes

4. Location and identification of all accessories

5. Size and location of all conduit entrances for Buyers connections

6. Anchoring details

7. Ground pad locations

8. Weight of core and coil, transformer tank and fittings, weight and gallons of fluid, and total shipping weight

9. Instruction, operating and maintenance manual covering all equipment furnished

1.04 QUALITY ASSURANCE

A. The manufacturer shall have specialized in the design, manufacture and assembly of liquid filled padmounted tamper-resistant transformers for a minimum of 10 years.

B. The transformers shall be manufactured by a company which is certified to ISO 9001:1994, EN ISO 9001:1994; BS EN ISO 9001:1994; ANSI/ASQC Q9001: 1994 for design and manufacture of Power Distribution and Specialty Dry Type Transformers. A certificate of Compliance to this requirement shall be provided with the proposal.

PART 2 PRODUCTS

2.01 MANUFACTURERS

A. ABB, Square D, or equal.

2.02 RATINGS

A. 150 kVA, 12.47kV Primary Delta, 480/277V Secondary Wye

B. 95kV Primary BIL, 30kV Secondary BIL.

C. 5% Impedance

D. 65C Temperature Rise

E. Primary and Secondary Termination: Underground Cable

2.03 WINDING CHARACTERISTICS

A. All windings and internal connections shall be copper or aluminum.

B. The windings shall be tightly wound utilizing tension devices to place the conductor into the coils.

C. For optimum dielectric and mechanical strength, a minimum of two sheets of epoxy coated insulation shall be placed between each layer in the winding.

D. Sheet conductor shall be used in secondary winding to minimize vertical short circuit forces.

E. The transformer shall be designed and constructed to be completely self protected by its ability to withstand the external short-circuits, as defined by ANSI C57. 12.00.

F. Evidence of compliance to these short-circuit requirements as required in C57.12.00 and C57.12.90 shall be submitted to the Buyer at the time of quotation.

G. The transformer design shall be capable of operating above rated voltage or below rated frequency in accordance with ANSI C57.12.00.

2.04 SOUND LEVEL

A. The padmounted tamper-resistant transformer shall be designed and constructed to minimize the audible noise generated with the transformer energized at rated voltage and with all auxiliary cooling equipment in operation. The acceptable noise level shall be in accordance with NEMA standard TR 1. The measurement procedure shall be as specified in ANSI C57.12.90

2.05 HIGH VOLTAGE COMPARTMENT

A. The transformer shall be furnished with a high voltage compartment located on the left of the centerline in ANSI Segment 1. The high voltage compartment shall be furnished with deadfront construction, externally clamped high voltage epoxy bushing wells for 200 A load-break or 600 A non-load-break inserts. The HV compartment shall be provided with an interlocked door which can only be opened after the LV compartment door has been opened.

2.06 LOW VOLTAGE COMPARTMENT

A. The transformer shall be furnished with a low voltage compartment located on the right of the centerline in ANSI Segment 1. The low voltage compartment shall be provided with a three-point latch with provisions for padlocking. The low voltage compartment shall include all indicating devices and fittings that are to be supplied, along with a stainless steel diagrammatic nameplate. The LV compartment shall include NEMA spade terminals with supports.

2.07 CORE

A. The core shall be clamped and braced to resist distortion caused by short-circuit stresses within rating or transportation handling and to prevent the shifting of core laminations.

B. The core shall be constructed of high-grade, grain oriented, silicon steel laminations, with high magnetic permeability. Core construction shall include step-lap mitered joints to keep core losses, excitation current and noise level at a minimum.

2.08 INSULATING FLUID AND PRESERVATION SYSTEM

A. The fluid preservation system shall be a sealed tank type.

B. The transformer insulating fluid shall be certified to contain no detectable PCB’s at the time of shipment and the tank shall be so labeled. Certification shall also be provided that the transformer and components have not been contaminated with PCB’s prior to shipment.

C. The transformer insulating fluid shall meet or exceed the requirements of the appropriate ANSI and ASTM fluid Standards. The transformer fluid shall be tested for dielectric breakdown and moisture content at the time of shipment.

2.09 TANK DESIGN

A. The transformer tank, cooling equipment and compartments subject to pressures shall be designed to withstand, without permanent deformation, pressures of at least twenty-five percent greater than maximum operating pressures. The maximum design withstand pressure shall be indicated on the nameplate.

B. Tank design shall include sufficient expansion volume to allow operation under specified load conditions.

C. The main cover shall be welded onto the tank.

D. One or more handholes shall be provided in the tank cover for access to bushing connections and current transformers, when required. The opening shall be of sufficient size to allow removal of any CT.

E. The transformer base shall be suitable for rolling or skidding in the direction of either tank base centerline.

F. The base shall be designed so the center of gravity of the transformer as assembled for transport does not fall outside the base for a tilt of fifteen degrees.

G. Lifting lugs shall be provided at each corner of the tank. The lifting lugs shall be designed to provide a minimum safety factor of 5.

H. Jacking area, pads or bosses shall be provided.

2.10 GASKETS

A. The gaskets shall be compatible for the insulating fluid in the transformer tank.

2.11 COOLING SYSTEM

A. The transformer shall be self-cooled.

B. Cooling tubes or radiators shall be rigidly supported to the tank wall, either through pipes or brackets.

2.12 GROUNDING PROVISIONS

A. All non-energized metallic components of the transformer shall be grounded.

B. Tank grounding provisions shall consist of two ground pads, welded to the base or to the tank wall near the base on diagonal corners.

C. Ground pads shall be copper-faced or stainless steel with two holes spaced horizontally at 1.75-inch centers and tapped for 0.5 inch 13-UNC tread.

2.13 EXTERIOR FINISH

A. The transformer painting system shall be in compliance with ANSI C57.12.28. The transformer shall be thoroughly cleaned and phosphatized, then painted with at least one coat of corrosion inhibiting primer and one finish coat to provide a minimum total dry-film thickness of not less than 3 mils.

2.14 ACCESSORIES

A. The transformer shall be equipped with a complete set of standard accessories, including:

1. Magnetic liquid level gauge
2. Dial type thermometer.
3. Pressure-vacuum gauge.
4. Pressure relief valve.
5. A 1-inch upper filter press connection with pipe plug.
6. A 1-inch drain valve and bottom filter press connection.

PART 3 EXECUTION

3.01 INSTALLATION

A. The Contractor shall follow all manufacturer installation recommendations. Any discrepancy between the project plans and manufacturer instructions shall be coordinated with the Engineer.

3.02 TESTING

A. Standard factory testing only, no special testing required.

END OF SECTION

THIS PAGE INTENTIONALLY LEFT BLANK

SECTION 16460

TRANSFORMERS

PART 1 GENERAL

1.01 SCOPE OF WORK

A. Provide general purpose transformers as shown on the Drawings and as specified herein.

1.02 REFERENCE SPECIFICATIONS

A. NFPA 70 – National Electrical Code

B. NEMA ST20

C. Underwriters Laboratories (UL) 1561

1.03 SUBMITTALS

A. Submit in accordance with Section 01330, Submittals.

1.04 STANDARDS

A. Transformers 1000 kVA and smaller shall be listed by UL.

B. Conform to the requirements of ANSI/NFPA 70.

C. Transformers are to be manufactured and tested in accordance with NEMA ST20.

PART 2 PRODUCTS

2.01 MANUFACTURERS

A. Transformers shall be as manufactured by Square D, Acme, Hammond, or equal.

2.02 RATINGS INFORMATION

A. All insulating materials are to exceed NEMA ST20 standards and be rated for 220 degrees C UL component recognized insulation system.

B. The maximum temperature of the top of the enclosure shall not exceed 50 degree C rise above a 40 degree C ambient.

C. The transformer(s) shall be rated as indicated in the following schedule:

1. Identification Number(s)
2. kVA Rating
3. Voltages
4. Phase
5. Frequency

2.03 CONSTRUCTION

A. Transformer coils shall be of the continuous wound construction and shall be impregnated with nonhygroscopic, thermosetting varnish.

B. All cores to be constructed with low hysteresis and eddy current losses. Magnetic flux densities are to be kept well below the saturation point to prevent core overheating. Cores for transformers greater than 500 kVA shall be clamped utilizing insulated bolts through the core laminations to provide proper pressure throughout the length of the core. The completed core and coil shall be bolted to the base of the enclosure but isolated by means of rubber vibration-absorbing mounts. There shall be no metal-to-metal contact between the core and coil and the enclosure except for a flexible safety ground strap. Sound isolation systems requiring the complete removal of all fastening devices will not be acceptable.

C. The core of the transformer shall be visibly grounded to the enclosure by means of a flexible grounding conductor sized in accordance with applicable UL and NEC standards.

D. The transformer enclosures shall be ventilated and be fabricated of heavy gauge, sheet steel construction. The entire enclosure shall be finished utilizing a continuous process consisting of degreasing, cleaning and phosphatizing, followed by electrostatic deposition of polymer polyester powder coating and baking cycle to provide uniform coating of all edges and surfaces. The coating shall be UL recognized for outdoor use. The coating color shall be ANSI 49.

2.04 SOUND LEVELS

A. Sound levels shall be warranted by the manufacturer not to exceed the following: 15 to 50 kVA – 45 dB; 51 to 150 kVA – 50 dB; 151 to 300 kVA – 55 dB; 301 to 500 kVA – 60 dB; 501 to 700 kVA – 62 dB; 701 to 1000 kVA – 64 dB; 1001 to 1500 kVA – 65 dB; 1501 to 2000 kVA – 66 dB.

PART 3 EXECUTION

3.01 GENERAL

A. Ground all separately derived systems according to NEC.

END OF SECTION

SECTION 16470

PANELBOARDS

PART 1 GENERAL

1.01 SCOPE OF WORK

A. Furnish and install 480V three phase, four wire power distribution panelboards and 120/208-240V single phase three wire or three phase four wire lighting and appliance panelboards as shown on the Drawings.

1.02 REFERENCE SPECIFICATIONS

A. The panelboards and circuit breakers referenced herein are designed and manufactured according to the latest revision of the following specifications.

1. NEMA PB 1 – Panelboards
2. NEMA PB 1.1 – Instructions for Safe Installation, Operation and Maintenance of Panelboards Rated 600 Volts or Less
3. NEMA AB 1 – Molded Case Circuit Breakers
4. NEMA KS 1 – Enclosed and Miscellaneous Distribution Equipment Switches (600 Volts Maximum)
5. UL 50 – Enclosures for Electrical Equipment
6. UL 67 – Panelboards
7. UL 98 -- Enclosed and Dead-front Switches
8. UL 489 – Molded Case Circuit Breakers and Circuit Breaker Enclosures
9. CSA Standard C22.2 No. 29-M1989 – Panelboards and Enclosed Panelboards
10. CSA Standard C22.2 No. 5-M91 – Molded Case Circuit Breakers
11. Federal Specification W-P-115C – Type I Class I
12. Federal Specification W-P-115C – Type II Class I
13. Federal Specification W-C-375B/Gen. – Circuit Breakers, Molded Case, Branch Circuit and Service
14. Federal Specification W-C-865C – Fusible Switches
15. NFPA 70 – National Electrical Code (NEC)
16. ASTM – American Society of Testing Materials

1.03 SUBMITTAL AND RECORD DOCUMENTATION

A. Approval documents shall include drawings. Drawings shall contain overall panelboard dimensions, interior mounting dimensions, and wiring gutter dimensions. The location of the main, branches, and solid neutral shall be clearly shown. In addition, the drawing shall illustrate one-line diagrams with applicable voltage systems.

1.04 DELIVERY, STORAGE, AND HANDLING

A. Inspect and report concealed damage to carrier within their required time period.

B. Handle carefully to avoid damage to panelboard internal components, enclosure, and finish.

C. Store in a clean, dry environment. Maintain factory packaging and, if required, provide an additional heavy canvas or heavy plastic cover to protect enclosure(s) from dirt, water, construction debris, and traffic.

1.05 WARRANTY

A. Manufacturer shall warrant specified equipment free from defects in materials and workmanship for the lesser of one (1) year from the date of installation or eight (18) months from the date of purchase.

PART 2 PRODUCTS

2.01 MANUFACTURERS

A. Acceptable manufacturers shall be Square D, Siemens, Eaton, or approved equal.

2.02 POWER DISTRIBUTION PANELBOARDS

A. Interior

1. Shall be rated 600 VAC or 250 VDC maximum. Continuous main current ratings as indicated on Drawings, not to exceed 1200 amperes maximum. Panelboard bus current ratings shall be determined by heat-rise tests conducted in accordance with UL 67.

2. Provide UL Listed short circuit current ratings (SCCR) as indicated on the associated Drawings not to exceed the lowest interrupting capacity rating of any circuit breaker installed with a maximum of 200,000 rms symmetrical amperes. Main lug and main breaker panelboards shall be suitable for use as Service Equipment when application requirements comply with UL 67 and NEC Articles 230-F and –G.

3. The bussing shall be fully rated with sequentially phased branch distribution. Panelboard bussing rated 100 through 600 amperes shall be plated copper. Bussing rated 800 amperes and above shall be plated copper. The entire interleaved assembly shall be contained between two (2) U-shaped steel channels, permanently secured to a galvanized steel-mounting pan by fasteners employing the use of a tamper-resistant warning label.

4. Interior trim shall be of dead-front construction to shield user from all energized parts. Main circuit breakers through 800 amperes shall be vertically mounted. Main circuit breaker and main lug interiors shall be bottom incoming feed.

5. Equipment ground bar shall be bonded. Ground bar shall be copper. Solid neutral shall be equipped with a full capacity-grounding strap for service entrance applications. UL Listed panelboards with 200% rated solid neutrals shall have plated copper neutral bus for non-linear load applications. Gutter-mounted neutral will not be acceptable.

6. Nameplates shall contain system information and catalog number or factory order number. Interior wiring diagram, neutral wiring diagram, UL Listed label, and Short Circuit Current Rating shall be provided. Leveling provisions shall be provided for flush mounted applications.

B. Molded Case Circuit Breakers – Mains and Branches

1. Circuit breakers shall be constructed in accordance with the following standards.

UL 489	Federal Specification W-C-375B/GEN
NEMA AB1	CSA 22.2, No. 5-M91
IEC 157-1	BS 4752

2. Circuit breakers shall be constructed using glass reinforced polyester insulating material providing superior dielectric strength. Current-carrying components shall be completely isolated from the handle and the accessory mounting area.

3. Circuit breakers shall have an overcenter, trip-free, toggle operating mechanism which will provide quick-make, quick-break contact action. The circuit breaker shall have common tripping of all poles.

4. Circuit breakers shall have a push-to-trip button for maintenance and testing purposes.

5. Circuit breaker escutcheon shall have international I/O markings, in addition to standard ON/OFF markings. Circuit breaker handle accessories shall provide provisions for locking handle in the ON or OFF position.

6. Breaker faceplate shall indicate rated ampacity. Breaker faceplate shall indicate UL and IEC certification standards with applicable voltage systems and corresponding AIR ratings.

7. Circuit breakers shall be factory sealed and shall have a date code on the face of the circuit breaker. Poles shall be labeled with respective phase designations.

8. Standard construction circuit breakers shall be UL Listed for reverse connection without restrictive line or load markings. Circuit breakers shall be suitable for mounting and operating in any position.

9. Circuit breakers equipped with line terminal jaws shall meet the following requirements. In the event of a short circuit condition, the increased magnetic flux shall cause the jaws to grip the supply bus more firmly. Circuit breaker jaws shall be protected by an impact resistant molded shroud.

10. Circuit breakers equipped with line terminal jaws shall not require any additional external mounting hardware. Circuit breakers shall be held in mounted position by a self-contained bracket secured to the mounting pan by fasteners. Each individual circuit breaker shall be capable of being mounted independently. Circuit breakers of different frame sizes shall be capable of being mounted across from each other.

11. Manufacturer shall provide time/current characteristic trip curves (Ip and I2T let-through curves for true current limiting circuit breakers only) for each type of circuit breaker.

12. Lugs shall be UL Listed to accept solid or stranded copper conductors only. Lugs shall be suitable for 90 degree C rated wire, sized according to the 75 degree C temperature rating per NEC Table 310-16. Lug body shall be bolted in place; snap-in designs are not acceptable.

13. Circuit breakers shall be UL Listed for use with the following accessories: Shunt Trip, Under Voltage Trip, Auxiliary Switch, Alarm Switch, Ground Fault Shunt Trip, Electrical Operators, Cylinder Locks, Mechanical Lugs Kits, Compression Lugs Kits, and Handle Accessories.

C. Equipment Ground Fault Protection

1. Where required, ground fault protection shall be true rms sensing type.

2. Provide a separate neutral current transformer for three-phase, four-wire systems.

3. The ground fault sensing system shall be residual type.

4. Provide a means of testing the ground fault system to meet the on-site testing requirements of NEC Article 230-95(c).

5. Provide local visual trip indication for overload, short circuit, and ground fault trip occurrences.

D. Enclosures

1. Boxes shall be galvanized steel construction in accordance with UL requirements. Zinc-coated galvannealed steel and will not be acceptable.

2. Boxes shall have removable blank endwalls and interior mounting studs. Interior support bracket shall be provided for ease of interior installation.

3. The enclosure shall be NEMA Type 1 construction, dimensions as shown on the Drawings.

2.03 LIGHTING AND RECEPTACLE PANELBOARD TYPE

A. Interior

1. Shall be type NQOD panelboard rated for 240 VAC/48 VDC maximum. Continuous main current ratings, as indicated on associated schedules, not to exceed 600 amperes maximum.

2. Minimum short circuit current rating: 10,000 in rms symmetrical amperes at 240 VAC.

3. Provide one (1) continuous bus bar shall have sequentially phased branch circuit connectors suitable for plug-on or bolt-on branch circuit breakers. The bussing shall be fully rated. Panelboard bus current ratings shall be determined by heat-rise tests conducted in accordance with UL 67. Bussing rated 100-400 amperes shall be copper.

4. All current-carrying parts shall be insulated from ground and phase-to-phase by Noryl high dielectric strength thermoplastic or equivalent.

5. Split solid neutral shall be plated and located in the mains compartment up to 225 amperes so all incoming neutral cable may be of the same length.

6. Interior trim shall be of dead-front construction to shield user from energized parts. Dead-front trim shall have pre-formed twistouts covering unused mounting space.

7. Nameplates shall contain system information and catalog number or factory order number. Interior wiring diagram, neutral wiring diagram, UL Listed label and short circuit current rating shall be displayed on the interior or in a booklet format.

8. Interiors shall be field convertible for top or bottom incoming feed. Main and sub-feed circuit breakers shall be vertically mounted. Main lug interiors up to 400 amperes shall be field convertible to main breaker. Interior leveling provisions shall be provided for flush mounted applications.

B. Main Circuit Breaker

1. Main circuit breakers shall have an overcenter, trip-free, toggle mechanism which will provide quick-make, quick-break contact action. Circuit breakers shall have a permanent trip unit with thermal and magnetic trip elements in each pole. Each thermal element shall be true rms sensing and be factory calibrated to operate in a 40-degree C ambient environment. Thermal elements shall be ambient compensating above 40-degree C.

2. Two- and three-pole circuit breakers shall have common tripping of all poles. Circuit breakers frame sizes above 100 amperes shall have a single magnetic trip adjustment located on the front of the circuit breaker, which allows the user to simultaneously select the desired trip level of all poles. Circuit breakers shall have a push-to-trip button for maintenance and testing purposes.

3. Breaker handle and faceplate shall indicate rated ampacity. Standard construction circuit breakers shall be UL Listed for reverse connection without restrictive line or load markings.

4. Circuit breaker escutcheon shall have international I/O markings, in addition to standard ON/OFF markings. Circuit breaker handle accessories shall provide provisions for locking handle in the ON or OFF position.

5. Lugs shall be UL Listed to accept stranded copper conductors only. Lugs shall be suitable for 90 degree C wire, sized according to the 75 degree C temperature rating per NEC Table 310-16. Lug body shall be bolted in place; snap-in designs are not acceptable.

6. The circuit breakers shall be UL Listed for use with the following accessories: Shunt Trip, Under Voltage rip, Ground Fault Shunt Trip, Auxiliary Switch, Alarm Switch, Mechanical Lug Kits, and Compression Lug Kits.

C. Branch Circuit Breakers

1. Circuit breakers shall be UL Listed with amperage ratings, interrupting ratings, and number of poles as indicated on the panelboard schedules.

2. Molded case branch circuit breakers shall have bolt-on type bus connectors.

3. Circuit breakers shall have an overcenter toggle mechanism which will provide quick-make, quick-break contact action. Circuit breakers shall have thermal and magnetic trip elements in each pole. Two- and three-pole circuit breakers shall have common tripping of all poles.

4. There shall be two forms of visible trip indication. The breaker handle shall reside in a position between ON and OFF. In addition, there shall be a red VISI-TRIP indicator appearing in the clear window of the circuit breaker housing.

5. The exposed faceplates of all branch circuit breakers shall be flush with one another.

6. Lugs shall be UL Listed to accept stranded copper conductors only. Lugs shall be suitable for 90 degree C rated wire, sized according to the 75 degree C temperature rating per NEC Table 310-16.

7. Breakers shall be UL Listed for use with the following factory installed accessories: Shunt Trip, Auxiliary Switch, Alarm Switch.

D. Enclosures

1. Type 1 Boxes

2. Boxes shall be galvanized steel constructed in accordance with UL 50 requirements.

3. Boxes shall have removable endwalls with knockouts located on one end. Boxes shall have welded interior mounting studs. Interior mounting brackets are not required.

4. Box width shall be 20 inches wide.

PART 3 EXECUTION

3.01 INSTALLATION

A. Install panelboards in accordance with manufacturer’s written instructions, NEMA PB 1.1 and NEC standards.

B. Anchor panelboards to structure and make branch circuit connections.

C. Coordinate the panelboard bus ratings and circuit breaker coordination rating with the available fault current.

3.02 FIELD QUALITY CONTROL

A. Inspect complete installation for physical damage, proper alignment, anchorage, and grounding.

B. Measure steady state load currents at each panelboard feeder; rearrange circuits in the panelboard to balance the phase loads within 20% of each other. Maintain proper phasing for multi-wire branch circuits.

C. Check tightness of bolted connections and circuit breaker connections using calibrated torque wrench or torque screwdriver per manufacturer's written specifications.

END OF SECTION

THIS PAGE INTENTIONALLY LEFT BLANK

SECTION 16500

LIGHTING FIXTURES

PART 1 GENERAL

1.01 SCOPE OF WORK

A. Provide, install, and test all interior and exterior lighting fixtures as specified herein.

B. Provide and install replacement LED fixtures as specified on the Drawings for existing plant buildings.

1.02 RELATED SECTIONS

A. Section 16110 – Raceways and Boxes

B. Section 16140 – Wiring Devices

1.03 SUBMITTALS

A. Submit in accordance with Specification Section 01300, Submittals, for all equipment specified herein.

B. Submit manufacturer data sheets listing all accessories.

PART 2 PRODUCTS

2.01 EXTERIOR LED WALL MOUNT FIXTURE

A. This article covers fixture schedule designation A.

B. The fixture housing shall be cast aluminum, mount to a standard wall junction box, IP65 rated, full cutoff downlight only.

C. The driver shall be universal voltage input from 120-277V, certified by UL.

D. Fixture optics shall utilize vacuum-metallized specular reflectors which are engineered for superior field-to-beam ratios, uniformity and spacing.

E. The fixture surge protection shall meet ANSI/IEEE C62.41.2 Category C.

F. The light engine housing shall meet IP66.

G. The fixture shall be IES forward throw distribution.

H. The fixture warranty shall be 5 years.

I. The fixture shall be equal to WDGE3 LED P3 30K 80CRI RFT MVOLT PBBW DDBXB PE, with 71 watts input. Provide a spacer between the fixture and metal building panel ribs.

2.02 LOW BAY LED PENDANT MOUNT

A. This article covers fixture schedule designation B.

B. The fixture construction shall be low copper content die cast aluminum housing, with integral heat sink fins to optimize thermal management. The lens shall be polycarbonate with IK10 impact resistance. The fixture shall utilize a single light engine with multiple LED boards.

C. L85 lumen maintenance at 60,000 hours.

D. Standard 0-10V dimming.

E. The fixture shall be 120/277V input.

F. The fixture shall be 4000K color and minimum 80 CRI.

G. The fixture shall be 3/4" pendant mount from the ceiling joist structure.

H. The B fixture shall be equal to Lithonia CPRB AL013 UVOLT SWW9 80CRI PM DWH, with 83-watt input. The fixture shall include standard safety cable/chain.

2.03 EMERGENCY/EXIT LIGHTING COMBO WITH REMOTE HEAD

A. This article covers fixture schedule designation X and XR.

B. The fixture construction shall be thermoplastic housing, impact-resistant, scratch-resistant, and corrosion-proof. The fixture faceplate and back cover shall be interchangeable on the housing. The fixture shall include universal, directional chevron inserts that are easily removed and reinserted. The fixture letters shall be 6 inches high with 3/4-inch stroke, with 100 foot viewing distance rating based upon UL924 standard. Low-energy LED lamp in sign shall operate in normal (AC input) and emergency (DC input) modes. The fixture shall include a low-profile, integrated test switch/pilot light.

C. Twin LED lamp heads operate in emergency (DC input) mode with 12 series-parallel white LEDs in each head.

D. The fixture shall be 120 or 277V input.

E. The fixture shall be equal to Lithonia LHQM LED R HO.

F. Each combo exit/emergency light shall be provided with a twin head wet location emergency remote light. The remote shall be equal to Lithonia ELMRW LP220L DNAXN T.

PART 3 EXECUTION

3.01 GENERAL

A. Each fixture shall be a completely furnished unit with all components, mounting, and hanging devices necessary for the proper installation of the fixture in the location as shown on the Drawings.

B. Coordinate all fixture locations with other trades.

END OF SECTION

THIS PAGE INTENTIONALLY LEFT BLANK

SECTION 16600

HVAC

PART 1 GENERAL

1.01 SCOPE

A. This section covers the furnishing and installation of heating, ventilating, and air conditioning equipment, devices, and appurtenances associated with the temperature control systems.

B. Piping, pipe supports, valves, and accessories which are not an integral part of the equipment or are not specified herein are covered in other sections.

1.02 GENERAL

A. Equipment furnished and installed under this section shall be fabricated, assembled, erected, and placed in proper operating condition in full conformity with the Drawings, Specifications, engineering data, instructions, and recommendations of the equipment manufacturer unless exceptions are noted by Engineer.

B. Coordination

1. Contractor shall verify that each component of the system is compatible with all other parts of the system; that all piping, ductwork, materials, fans, and motor sizes are appropriate; and that all devices necessary for a properly functioning system have been provided.

2. Where two or more units of the same class of equipment are needed, they shall be the product of a single manufacturer; however, all the component parts of the system need not be the products of one manufacturer.

3. Where individual equipment paragraphs specify the requirement for local service, each manufacturer shall have a local service center, or with written consent of Engineer, shall be able to provide service from other locations within 24 hours. The service center shall be equipped and staffed to service the system and shall maintain a local parts supply. Information on equipment manufacturers' representatives shall be included with the submittals.

4. Where several manufacturers' names have been listed in this section as possible suppliers, only the products of the first manufacturer listed have been checked for size, functions, and features.

C. General Equipment Stipulations

1. The General Equipment Stipulations shall apply to all equipment and materials furnished under this section. If requirements in this specification differ from those in the General Equipment Stipulations, the requirements specified herein shall take precedence.

D. Governing Standards

1. Except as modified or supplemented herein, all work covered by this section shall be performed in accordance with all applicable municipal codes and ordinances, laws, and regulations. In case of a conflict between this section and any state law or local ordinance, the latter shall govern.

2. All work shall comply with UL safety requirements.

E. Power Supply

1. Power supply to ventilation equipment with motors shall 120-volt, 60 Hz, single phase unless otherwise specified.

2. Power supply to electric unit heater equipment shall be 480-volt, 60 Hz, three phase unless otherwise specified.

3. Power supply to air conditioning equipment shall be 240-volt, 60 Hz, single phase unless otherwise specified.

F. Metal Thickness

1. Metal thickness and gages specified herein are minimum requirements. Gages refer to US Standard gage.

1.03 SUBMITTALS

A. Drawings and Data

1. Complete assembly and installation drawings, and wiring and schematic diagrams, together with detailed specifications and data covering materials, parts, devices, and accessories forming a part of the equipment furnished, shall be submitted in accordance with the Submittals Procedures section. Device tag numbers indicated on the Drawings shall be referenced on the wiring and schematic diagrams where applicable. The data and specifications for each unit shall include, but shall not be limited to, the following:

a. Fans

1) Name of manufacturer

2) Type and model

3) Construction materials, thickness, and finishes

4) Overall dimensions and required clearances

5) Net weight and load distribution

6) Performance curves with the specified operating point clearly identified for each unit, type, and model, with capacity in cubic feet per minute as the abscissa and brake horsepower, static pressure, and efficiency as the ordinate. The fan curves shall include a family of curves for at least 3 different rotative speeds on a single chart

7) Certified AMCA standard test code sound power output data for the fan outlet and casing when operating at the specified volume flow rate. Sound data shall list dB re 10-12 watts in each octave band, with midrange frequencies starting at 63 Hz and ending at 8,000 Hz

8) Where specified, information on equipment manufacturers' representatives

b. Equipment (not specifically listed)

1) Name of manufacturer
2) Type and model
3) Construction materials, thickness, and finishes
4) Manufacturer's performance data
5) Overall dimensions and required clearances
6) Net weight and load distribution
7) Wiring diagrams

c. Temperature Controls

1) Published descriptive data on each item of equipment and accessories, indicating all specific characteristics and options and identified with the designation used herein and on the Drawings.

2) Schematic control diagrams giving specific data on all settings, ranges, actions, adjustments, and normal positions. Although schematic, these diagrams shall, as closely as possible, represent the actual system with all significant equipment and devices identified and located relative to each other. These diagrams shall also show detailed multiline wiring with all terminals accurately identified. The wiring diagrams shall show the internal connections of the temperature control panels and all field wiring to equipment remote from the control panels, including wiring to Owner-furnished equipment. The wiring diagrams shall be complete, showing all connections necessary to place the temperature control systems in operation. Wiring diagrams shall be detailed to the degree necessary for field construction and shall include all related wiring.

3) Sequence of operation for each system corresponding to the control schematics.

4) Detailed panel construction drawings, including description of all materials and finishes, complete internal wiring and piping schematics, panel face layout, and complete data on all mounted components.

5) Space thermostat schedule indicating the types of covers and means of adjustment for each space.

6) Conduit and wire types.

7) Where specified, information on equipment manufacturers' representatives.

B. Operation and Maintenance Data and Manuals

1. Adequate operation and maintenance information shall be supplied as required in the Submittals Procedures section. Operation and maintenance manuals shall be submitted in accordance with the Submittals Procedures section. The operation and maintenance manuals shall be in addition to any instructions or parts lists packed with or attached to the equipment when delivered.

2. In addition to the requirements of the Submittals Procedures section, the operation and maintenance manuals shall include a listing of all filter locations, types, sizes, and quantities associated with each piece of equipment.

1.04 QUALITY ASSURANCE

A. Quality assurance shall comply with the requirements of the Basic Mechanical Building Systems Materials and Methods section.

1.05 DELIVERY, STORAGE, AND HANDLING

A. Shipping shall be in accordance with the Product Delivery Requirements section. Handling and Storage shall be in accordance with the Product Storage and Handling Requirements section.

1.06 EXTRA MATERIALS

A. Extra materials shall be furnished for the equipment as specified in the individual equipment paragraphs.

B. Extra materials shall be packaged in accordance with the Product Delivery Requirements section, with labels indicating the contents of each package. Each label shall indicate manufacturer's name, equipment name, equipment designation, part nomenclature, part number, address of nearest distributor, and current list price. Extra materials shall be delivered to Owner as directed.

C. Extra materials subject to deterioration such as ferrous metal items and electrical components shall be properly protected by lubricants or desiccants and encapsulated in hermetically sealed plastic wrapping.

PART 2 PRODUCTS

2.01 SERVICE CONDITIONS

A. All equipment shall be designed and selected to meet the specified conditions.

2.02 PERFORMANCE AND DESIGN REQUIREMENTS

A. Equipment capacities shall be as indicated on the Plans.

B. Each fan's operating selection point on the fan curves shall be selected to the right of the peak pressure/efficiency point and below the lowest point along the fan curve to the left of the peak pressure/efficiency point.

C. Dimensional Restrictions

1. Layout dimensions will vary between manufacturers and the layout area indicated on the Drawings is based on typical values of the first manufacturer listed. Contractor shall review the contract Drawings, the manufacturer's layout drawings, and installation requirements and shall make any modifications required for proper installation subject to acceptance by Engineer. At least 3 feet of clear access space shall be provided on all sides of the unit unless otherwise indicated.

D. Elevation

1. Equipment shall be designed to operate at an elevation of approximately EL. 1172'. All equipment furnished for sites above 2000 feet above sea level shall be properly derated to operate and meet the specified capacities at the site conditions.

2.03 ACCEPTABLE MANUFACTURERS

A. Acceptable manufacturers shall be as listed in the respective product description paragraphs.

2.04 MATERIALS

A. Electric Unit Heaters

1. Electric unit heaters, denoted by the symbol "EUH" and an identifying number, shall have the capacity indicated in the Drawings.

2. The unit heaters shall be provided with an integral electrical disconnect.

3. The unit heaters shall be provided with an integral thermostat.

4. The unit heaters shall be provided with a wall mount bracket.

B. Power Roof Ventilators

1. Provide and install two (2) roof mounted exhaust fans shall be similar or equal to a Greenheck Size 099 GB with a 1/4 hp motor, rated at 900 CFM each. Provide and install two (2) moveable louvers with 120VAC actuator, similar or equal to Greenheck EAD 632W 24" by 24". Provide and install an insect screen and extended sill. Provide with an AAMA 2604 coating with the color selected by the Owner.

2. Power roof ventilators shall be centrifugal roof mounted type and shall be direct or belt driven. Fan wheels shall be aluminum, backward inclined type statically and dynamically balanced at the factory for quiet, vibration-free operation. Fan housings shall be constructed of aluminum and shall have an aluminum base of the self-flashing type, suitable for mounting on the curbs indicated on the Plans. Each fan shall be complete with 1/2-inch mesh aluminum bird screen over all openings and a gravity backdraft damper.

3. Motors and drives shall be mounted outside the airstream. The wheel shaft shall be of ground and polished steel, mounted in heavy-duty, relubricatable or permanently sealed bearings with a minimum L_{50} service life of at least 200,000 hours at the equipment's maximum cataloged operating conditions.

4. A NEMA 4X safety disconnect switch shall be mounted in the hood. Where a factory installed integral disconnect switch is not available as a standard option, a disconnect for field installation shall be provided.

5. Provide and install two (2) line voltage cooling thermostats, similar or equal to Grainger 4E636, 16A inductive load rating, for each exhaust fan/louver pair.

C. DUCTLESS MINI-SPLIT AC SYSTEM

1. Provide and install one (1) 24000 BTU/HR mini-split heat pump system for heating/cooling of the switchgear controls room.

2. The ductless split systems shall include an indoor wall mounted fan coil section and an outdoor remote heat pump. Each unit shall be fully charged with R-410A and compressor oil. A wireless programmable thermostat shall be provided for control of each system.

3. The ductless system shall be supplied with architectural wall coverings for the electric and refrigerant lines between the heat pump and fan coil.

4. The ductless system shall be similar or equal to Mitsubishi MUZ 18 SEER unit.

2.05 ELECTRICAL

A. Electric motors and motor controls shall conform to the Basic Mechanical Building Systems Materials and Methods section. Motor starters and controls shall be furnished and installed under the Electrical section, except for equipment specified or furnished with prewired integral starters. Disconnects for equipment shall be furnished and installed under the Electrical section, except where specified with integral disconnects. All electrical controls shall have enclosures suitable for the environment and NEMA rating as indicated on the electrical Drawings. Equipment installed outdoors shall have NEMA Type 4 enclosures.

2.06 DRIVE UNITS

A. Electric motors, V-belt drives, and safety guards shall be in accordance with the requirements of the Basic Mechanical Building Systems Materials and Methods section.

2.07 SHOP TESTING

A. The equipment furnished under this section shall be tested at the factory according to the standard practice of the manufacturer. Ratings shall be based on tests made in accordance with applicable AMCA, ASHRAE, AHRI, NBS, NFPA, and UL Standards.

2.08 BALANCE

A. All rotating parts shall be accurately machined and shall be in as nearly perfect rotational balance as practicable. Excessive vibration shall be sufficient course for rejection of the equipment. The mass of the unit and its distribution shall be such that the resonance at normal operating speeds is avoided. In any case, the maximum measured root-mean-square (rms) value as measured at any point on the equipment shall not exceed those listed in the latest ASHRAE Applications Handbook.

B. At any operating speed, the ratio of rotative speed to the critical speed of a unit or components thereof shall be less than 0.8 or more than 1.3.

PART 3 EXECUTION

3.01 INSPECTION

A. Equipment installed in facilities with limited access shall be suitable for being installed through available openings. Contractor shall field verify existing opening dimensions and other provisions for installation prior to submittal of bids.

B. Where penetrations through existing concrete slabs are made, the Contractor shall locate and avoid damage to all rebar, embedded conduit, etc. when making new openings.

3.02 PREPARATION

A. Field Measurement

1. Contractor shall be responsible for verifying all field dimensions, and for verifying location of all equipment relative to any existing equipment or structures.

B. Surface Preparation

1. All surfaces to be field painted shall be dry and free of dirt, dust, sand, grit, mud, oil, grease, rust, loose mill scale, or other objectionable substances, and shall meet the recommendations of the paint manufacturer for surface preparation. Cleaning and painting operations shall be performed in a manner which will protect freshly painted surfaces from dust or other contaminants. Oil and grease shall be completely removed by use of solvents or detergents before mechanical cleaning is started. The gloss of previously painted surfaces shall be dulled if necessary for proper adhesion of topcoats.

2. Surface finish damaged during installation shall be repaired to the satisfaction of Engineer. Field painting shall be as specified in the Architectural Painting and Protective Coatings sections.

3.03 INSTALLATION

A. Equipment and materials furnished under this section shall be installed in proper operating condition in full conformity with the drawings, specifications, engineering data, instructions, and recommendations of the equipment manufacturer, unless exceptions are noted by Engineer.

B. Heaters

1. The bottom elevation of unit heaters shall be 8 feet above finished floor unless otherwise indicated.

C. Fans

1. Where indicated on the Drawings, flexible connections shall be installed between fan inlet and outlet sheet metal connections. Flexible connections shall not be in tension when the fans are operating. Where fan inlets and outlets are exposed, safety screens shall be installed over the opening. Scroll drains for equipment installed indoors shall be piped to the nearest floor drain.

2. Power roof ventilators shall be secured with corrosion resistant lag screws to the roof curb.

3. The installation shall be checked by the manufacturer in accordance with the Installation Check paragraph.

D. Temperature Controls

1. Thermostats

a. Wall-mounted thermostats shall be mounted above the finished floors as indicated in the Electrical section. Insulating spacers shall be provided for thermostats mounted on exterior building walls. The spacers shall be installed between the thermostat and its mounting surface, so that the thermostat will not be affected by surface temperatures.

b. Wall-mounted thermostats in non-air-conditioned areas shall be furnished and installed with a cast aluminum or wire guard.

3.04 FIELD QUALITY CONTROL

A. Installation Check

1. Where an installation check by the manufacturer is specified in the equipment installation paragraphs above, an experienced, competent, and authorized representative of the manufacturer shall visit the site of the Work and inspect, check, adjust if necessary, and approve the equipment installation. The representative shall be present when the equipment is placed in operation in accordance with the Startup Requirements section, and shall revisit the jobsite as often as necessary until all trouble is corrected and the equipment installation and operation are satisfactory in the opinion of Engineer.

2. The manufacturer’s representative shall furnish a written report certifying that the equipment has been properly installed and lubricated; is in accurate alignment; is free from any undue stress imposed by connecting piping or anchor bolts; and has been operated under full load conditions and that it operated satisfactorily.

3. All costs for these services shall be included in the Contract Price.

B. Startup and Testing

1. After the equipment and systems have been installed, adjusted, and balanced, tests shall be conducted to demonstrate that each system is functioning as specified and to the satisfaction of Engineer. Tests shall be as indicated in the Startup Requirements section.

2. If inspection or tests indicate defects, the defective work or material shall be replaced, and inspection and tests repeated. All repairs to piping shall be made with new materials. Caulking of threaded joints or holes will not be acceptable.

3.05 CLEANING

A. At the completion of the testing, all equipment, pipes, ductwork, valves, and fittings shall be cleaned of grease, debris, metal cuttings, and sludge. Any stoppage, discoloration, or other damage to parts of the building, its finish, or furnishings shall be repaired by Contractor at no additional cost to Owner.

END OF SECTION

THIS PAGE INTENTIONALLY LEFT BLANK

SECTION 16940

NETWORKING

PART 1 GENERAL

1.01 SCOPE OF WORK

A. Provide, install, configure, and test a copper and fiber optic based Local Area Network (LAN) between switchgear sections and the switchgear control panel.

B. Provide and install a fiber optic converter control panel to allow the Switchgear Building to connect to the plant communication network.

C. The Division 16 Contractor shall provide under this section of the Specifications all materials, labor, equipment, tools and supplies for the installation of fiber optic cable, connectors, fiber terminations, and testing for a complete installation.

1.02 RELATED SECTIONS

A. Division 16 Electrical

1.03 SUBMITTALS

A. Submit in accordance with Section 01300, Submittals for all equipment specified herein.

1.04 O&M MANUALS

A. Upon completion of project installation, provide copies of the Ethernet switch user manuals in the project O&M manual. Provide printouts of each fiber optic pair signal test for use in future fiber optic system troubleshooting.

PART 2 PRODUCTS

2.01 LOCAL AREA NETWORK

A. Noland WWTP consists of a fiber optic link between the various existing points within the plant. This project will extend the fiber optic link to the Switchgear Building. Provide and install a local Network Control Panel in the switchgear building electrical room as shown on the Drawings.

B. Fiber Optic Cable

1. The fiber optic cable shall be stranded loose tube, indoor/outdoor rated with PVC jacketed UV resistant exterior.

2. The 62.5/125-micron multimode cable shall have maximum attenuation of 2.6 db/km at 850/1300nm and minimum bandwidth of 160/500 MHz-km at 850/1300nm.

3. The cable shall use dry-block technology to seal ruptures against moisture seepage and gel-filled buffer tubes to halt moisture migration.

4. The cable shall be suitable for lashed aerial, conduit, duct, and indoor/outdoor riser applications. The cable shall not require a splice point when transitioning indoors and directly accept fiber optic connectors.

5. Maximum cable load during installation shall be 600 lbs.-f.

6. Crush resistance shall be 55 lb. per inch for ten (10) minutes minimum.

7. The cable shall have six (6) fibers minimum.

C. INDUSTRIAL ETHERNET SWITCH

1. Provide and install Industrial Managed Ethernet Switches in a control panel as shown on the Drawings for SCADA LAN communications, including connection to a minimum of two (2) fiber optic segments. The switches shall be Red Lion, model 716FX2-SC as shown on the Drawings or equal.

2. The switches shall have ports as noted on the Drawings, with SC fiber connections where the model of the switch calls for as noted.

3. Each switch requiring fiber connection shall do so using SC fiber connections to the fiber patch panels in each control panel.

4. The operating voltage for the unmanaged SCADA switches shall be 24VDC.

5. The switch shall have diagnostic LEDs for power, link, status, data, and error.

6. The switch shall be DIN rail mount, listed to UL508.

7. The switch shall conform to IEEE 802.3.

D. COMPACT FIBER OPTIC PATCH PANEL

1. Provide and install a compact fiber optic patch panel for each enclosure with fiber optic cable entrance. The patch panel enclosure shall be equal to Hubbell model FTU1SP and the patch panel shall be equal to Hubbell model FSPNSCSS6.

2. The patch panel shall have 6 ea. SC duplex internal connector adapters.

3. The patch panel shall be panel mounted as detailed in the Drawings.

4. The patch panel shall be compact, 7.75" H x 5.75" D x 3.5" W dimensionally with cable glands top and bottom to accept up to 12 mm diameter cable.

E. FIBER OPTIC PATCH CABLES

1. Provide and install SC-SC fiber optic patch cables for all connections between the patch panels and Ethernet Media Converters, length as required for the control panel construction and layout.

F. ETHERNET PATCH CABLES

1. Provide and install Cat 6++ Ethernet patch cables with RJ45 connectors for connections between the Ethernet switch and devices inside the control panel, length as required for the control panel construction and layout.

G. BULK ETHERNET CABLE

1. Provide and install Cat 6++ industrial Ethernet cable with site installed RJ45 connectors for connections between control panels and equipment within buildings. The Ethernet cable shall be industrial rated, equal to Belden 3632/3633.

PART 3 EXECUTION

3.01 GENERAL

A. The fiber optic cable network shall be installed by a certified Contractor.

B. The fiber optic cable shall be 100 percent (100%) attenuation tested.

C. The fiber optic cable manufacturer shall be ISO 9001 registered.

3.02 PACKING AND SHIPPING

A. The completed cable shall be packaged for shipment on non-returnable wooden reels.

B. Top and bottom ends of the cable shall be available for testing.

C. Both ends of the cable shall be sealed to prevent the ingress of moisture.

D. Each reel shall have a weather resistant reel tag attached identifying the reel and cable.

3.03 INSTALLATION

A. The fiber optic cable shall be installed in locations as shown on the Drawings.

B. All fibers shall be polished and provided with ST connectors. The fibers shall be terminated into the patch panels as shown on the Drawings.

C. Testing of the fiber optic cable must be completed in the presence of the Owner and/or Engineer. Schedule testing with one (1) week advance notice minimum.

D. Upon completion of fiber installation, including ST connector installation at each end, the Contractor shall test each fiber pair using a certified fiber tester. The tester shall have capability of storing results and uploading them to a computer for report generation. The fiber report shall include data on the attenuation, return loss, graded refractive index, propagation delay, and time-domain reflectometry for each fiber pair. Provide a certified written report to the Engineer. Testing must be performed in the presence of the Engineer and the Owner.

END OF SECTION

Bid 26-30, Addendum 1

Date: Tuesday, April 21, 2026

To: All Prospective Vendors

From: Kenny Fitch – 479.575.8258 – kfitch@fayetteville-ar.gov

RE: Bid 26-30, Construction – Noland WWTF Switchgear

This addendum is hereby made a part of the contract documents to the same extent as though it were originally included therein. Interested parties should indicate their receipt of same in the appropriate blank of the Bid.

BIDDERS SHALL ACKNOWLEDGE THIS ADDENDUM ON THE DESIGNATED LOCATION ON THE BID FORM.

1. CLARIFICATIONS

a. The six (6) section 15kV switchgear will ship directly to the facility and immediately be placed inside the proposed switchgear building by the Contractor. The Contractor is responsible for all required equipment necessary to unload and install the equipment. The switchgear has three (3) shipping splits. Sections 1-2 weigh approximately 5450 pounds. Sections 3-4 weigh approximately 4450 pounds. Sections 5-6 weigh approximately 4700 pounds. The proposed building has a 20' width x 12' height overhead coiling door. The design assumes that the Contractor will utilize an appropriately sized forklift to offload and place the equipment through the coiling door entrance.

b. There are no concerns or coordination issues regarding load shed. The installation work will be completed during the time of year that Noland WWTP is not required to be on call for load shed.

c. During the shutdown procedure, the existing standby generator will be disconnected from the plant grid by turning the generator controls to OFF, opening the existing switchboard breaker and locking out, and the 15kV cutout switch feeding these will be opened. This shutdown will take place after the equipment is placed in the building, connected, and preliminary control checkouts have been performed by Caterpillar. The Contractor will have routed all 15kV conduits and cable to the power poles and be ready to make the final terminations as shown on Sheet E-04, so that the generator outage time can be minimized.

d. The only auxiliary generator required will be for building construction use. No auxiliary power for the treatment plant is required.

e. Caterpillar is responsible for all switchgear testing, with Contractor assistance as required for verification of power and control terminations between the pieces of equipment.

f. Caterpillar techs will be responsible for checking out the Contractor's work and implementing operation of the equipment.

g. To provide bidders with the gear specifications being provided by Caterpillar, a copy of the Caterpillar submittal is attached.

h. For security purposes, the Owner will setup lock access with the Contractor through a fence gate near the work area.

i. City of Fayetteville Building and Safety will not be involved in site inspections since the project is taking place outside of Fayetteville city limits. Hawkins-Weir Engineers and the Owner will inspect and accept the work.

j. Testing on high voltage cables shall be completed in the following manner:

- Pre-Test: perform a visual inspection of the cable prior to installation and ensure the concentric neutral is continuous.
- Electrical Tests: Use a 5kV or 10kV megohmmeter to measure the resistance between each phase and ground to ensure the insulation was not damaged during installation. Use a Very Low Frequency Withstand Test (VLF) for 30 minutes, or a DC Hi-Pot Test to verify insulation integrity. Ground and discharge as necessary during testing to discharge voltage. Record results as a baseline for future maintenance and provide to the Engineer.

k. Revised plan sheets S-04, S-05, S-06, and E-01 have been added as an attachment to this addendum.

l. Bidders are advised to bid on the items and equipment specified. Any substitution requests will be considered by the project team after the contract has been executed between the City and the successful bidder.

2. QUESTIONS:

a. Can an itemized list of owner provided equipment be distributed? Specific items in question include Control Panel 1, Control Panel 2, Control Panel Network, Battery Charger, and Battery Rack.

- The Owner provided equipment includes the six (6) section 15kV switchgear, Control Panel CP1, Control Panel CP2, Battery Rack, and Battery Charger. These items are part of Caterpillar's equipment package. Control Panel CP-NET is an existing piece of equipment and is specified to be relocated during construction. The Contractor shall supply and install Panel PP, Transformer T-1, Panel LP, the 150kVA pad mount transformer, and the 3000A Dual Purpose Docking Station as specified in Section 16220.

b. Regarding the mini split system, the refrigerant called out (410-A) is an old system that has been replaced with a new system (A2L) as the standard. Is there a reason the older system has been specified instead of the new?

- The latest standard refrigerant shall be used.

3. ATTACHMENTS:

a. Attachment A: Pre-Bid Meeting Sign-In Sheet

b. Attachment B: Caterpillar Switchgear Specifications

c. Attachment C: Revised Plan Sheets (S-04, S-05, S-06, and E-01)

Attachment A: Pre-Bid Meeting Sign-In Sheet

CITY OF FAYETTEVILLE ARKANSAS

City of Fayetteville, Arkansas

Attendance Sheet

BID/RFP/RFQ #: 26-30

Description: CONSTRUCTION - NOLAND WWTF SWITCHGEAR

Function (circle one): Bid Opening, Selection Committee Meeting, Pre-Bid, Interview

Date: 4 / 16 / 26 Time: 3:00pm

City staff e-mail includes "@fayetteville-ar.gov"

	Name	Company	Title	Phone	Email
1	Kenny Fitch	CoF	Sr. Proc. Agent	575-8258	kfitch@
2	Daniel Byars	Kinco Constructors	Project Manager	479-256-0939	Dbyars@kinco.net
3	Tommy Thomas	MMC Electrical	A.M.	479-871-9831	tthomas@mmcelectrical-craft.net
4	Bob Archer	Kinco Constructors	Director of Operations	479-[illegible]-7673	barcher@kinco.net
5	Tyson Reimer	Kinco Constructors	VP	479-263-6465	treimer@kinco.net
6	BRICE JULIAN	CROSSLAND Heavy Contractors	ESTIMATOR	479-550-1829	BJULIAN@HeavyContractors.com
7	Josh Durham	Hawkins-Weir Engineers	Project Engineer	479-455-2206	josh.durham@hawkins-weir.com
8	Scott McBrayer	Hawkins-Weir Engineers	Project Engineer	479.883.7025	scott.mcbrayer@hawkins-weir.com
9	Trevel Young	Proc. Agent	CoF	575-8289	tyoung@
10	Gordon Ray	King Electric	PM	479-530-6315	
11	Bob Poole	~~[illegible]~~ Fleming Electric	VP	479 957 2568	bpoole@fleming[illegible].com
12	Jesse Cortez	Gall Excavation	Estimater	479-640-6442	Jesse@gallexcavation.com
13	Cliff Barber	Big Red Electric	Estimator	479-427-1691	Cliff.barber@bigredelectric.com
14	DAVID WAGNER	SOUTHERN BROTHERS	Sr. Project Manager	479-340-4298	david.wagner@sobroco.com
15	Nathan Murray	Midland Industrial	Estimator	574-276-2395	nathan.murray@midlandllc.com
16	Caleb Delaney	midland Industrial	Estimator	479-409-1530	caleb.delaney@midlandllc.com
17	Taylor Counts	Prime Electric	PM	479-790-9726	~~[illegible]~~ taycounts@primeelectric.com
18	Richie Russell	Midland Industrial	Manager	479-409-1188	Richard.Russell@midlandllc.com

Meeting Notes, Decision, Description of Handouts, etc:

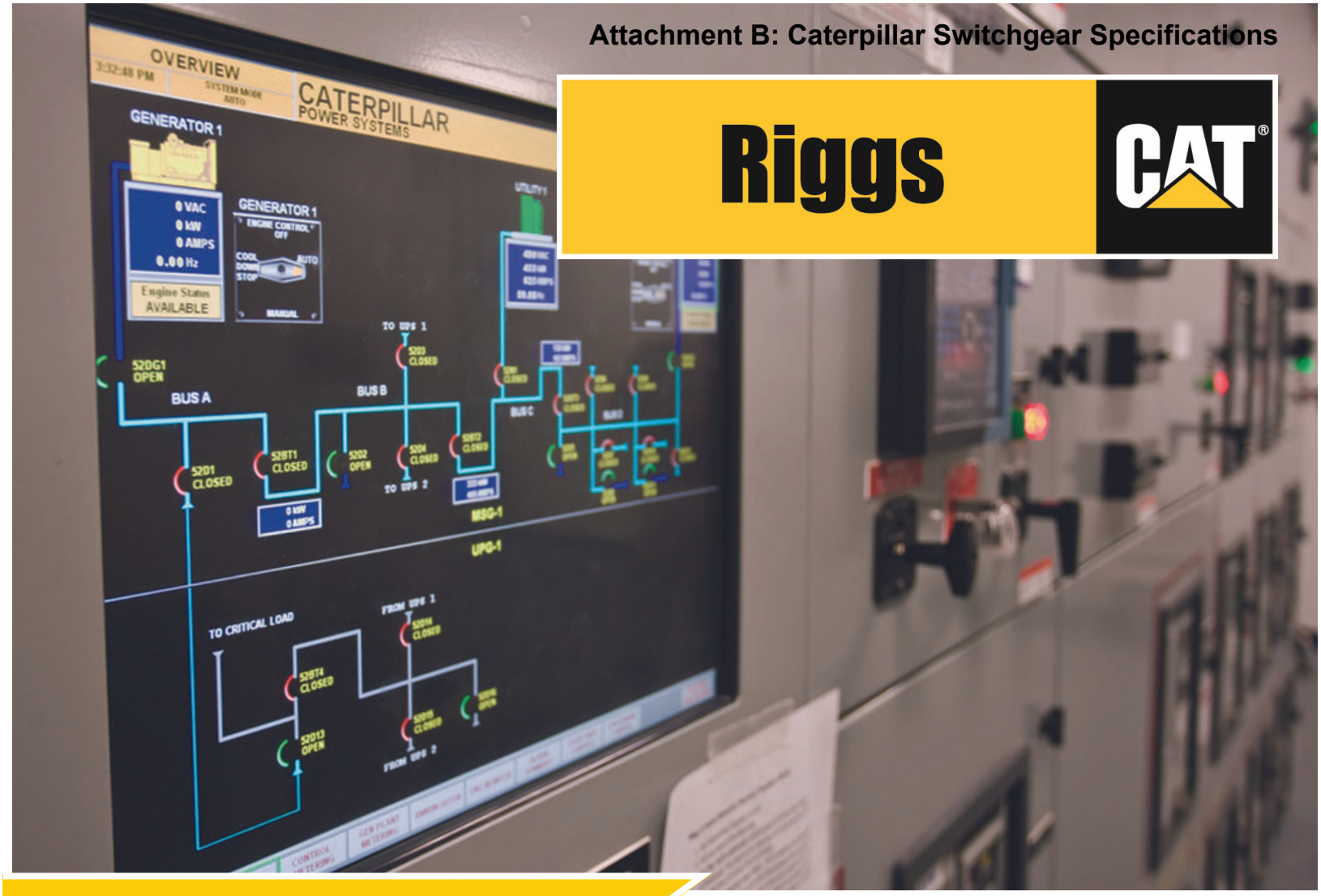

Riggs

SUBMITTAL

CAT® SWITCHGEAR AMERICAS LLC

Project # 41659

Noland WWTP

Caterpillar Switchgear Americas, LLC.
4955 Marconi Drive
Alpharetta, GA 30005

Submittal Acknowledgment & Release

This form serves as an official acknowledgment approving and releasing for production the enclosed Submittal of the **Sequence of Operations (SOO)**, **Bill of Materials (BOM)**, and **engineering drawings**. This document must be signed by all relevant parties to confirm their agreement and approval. Additionally, an updated purchase order is necessary to complete the release for production, specifying the effective dates. Delays in receiving the updated purchase order will impact the project timeline and delivery.

Project Information

Project Name: __Noland WWTP_____ Sequence of Operations revision number:_Rev.1

Project Number: _41659_____ Bill of Materials revision number: _Rev. 1____

Engineering drawings revision number: _0.0__

Additional Comments

See attached submittal review memo for requested changes and comments.

Approval

By signing below, parties acknowledge, approve, and release for production the enclosed Submittal Sequence of Operations, Bill of Materials, and engineering drawings per their specified revision numbers listed above:

Release Signature: _____ Date: ___October 9, 2025_____

Printed Name: _Scott McBrayer, P.E._____ Title: _Project Engineer, Hawkins-Weir Engineers

Release Signature: _____ Date: _____

Printed Name: _____ Title: _____

Caterpillar: Confidential Green

WARRANTY

Caterpillar: Confidential Green

Effective with sales to the first user on or after June 1, 2024

CATERPILLAR LIMITED WARRANTY

Industrial, Petroleum, Locomotive, and Agriculture Engine Products and Electric Power Generation Products

Worldwide

Caterpillar Inc. or any of its subsidiaries ("Caterpillar") warrants new and remanufactured engines and electric power generation products (new and new with Cat Reman Engines) sold by it (including any products of other manufacturers packaged and sold by Caterpillar), to be free from defects in material and workmanship.

This warranty does not apply to engines sold for use in on-highway vehicle or marine applications; engines in machines manufactured by or for Caterpillar; C175, 3500 and 3600 series engines used in locomotive applications; 3000 Family engines, C0.5 through C4.4 and ACERT™ (C6.6, C7, C7.1, C9, C9.3, C11, C13, C15, C18, C27, and C32) engines used in industrial, mobile agriculture and locomotive applications; or Cat® batteries; or Electric Power Generation products manufactured or assembled and sold in India except GC models, which are covered by this warranty. These products (except for GC models) are covered by other Caterpillar warranties.

This warranty is subject to the following:

Warranty Period

- For industrial engines, engines in a petroleum applications or Petroleum Power Systems (excluding petroleum fire pump application), or engines in a Locomotive application, or Uninterruptible Power Supply (UPS) systems, the warranty period is 12 months after date of delivery to the first user.
- For engines used in petroleum fire pump and mobile agriculture applications the warranty period is 24 months after date of delivery to the first user.
- For controls only (EPIC), configurable and custom switchgear products, and automatic transfer switch products, the warranty period is 24 months after date of delivery to the first user.
- For new CG132, CG170 and CG260 series power generation products the warranty period is 24 months after date of delivery to first user, but not to exceed 36 months from shipment from the Caterpillar place of manufacture.
- For electric power generation products other than CG132, CG170 and CG260 series in prime or continuous applications the warranty period is 12 months. For standby applications the warranty period is 24 months/1000 hours. For emergency standby applications the warranty period is 24 months/400 hours. All terms begin after date of delivery to the first user.
- For other manufacturer branded selective catalytic reduction systems (OMB-SCR) sold thru Caterpillar and installed by Caterpillar or a Cat dealer for use in select Cat 3500 generator sets sold and operating in the United States, the warranty period is 12 months beginning on the date of commissioning of the OMB-SCR. The maximum inventory or time the product is undelivered after receipt by the dealer or customer site is 6 months.
- For all other applications the warranty period is 12 months after date of delivery to the first user.

Caterpillar Responsibilities

If a defect in material or workmanship is found during the warranty period, Caterpillar will, during normal working hours and at a place of business of a Cat dealer or other source approved by Caterpillar:

- Provide (at Caterpillar's choice) new, Remanufactured, or Caterpillar approved repaired parts or assembled components needed to correct the defect.

Note: New, remanufactured, or Caterpillar approved repaired parts or assembled components provided under the terms of this warranty are warranted for the remainder of the warranty period applicable to the product in which installed as if such parts were original components of that product. Items replaced under this warranty become the property of Caterpillar.

- Replace lubricating oil, filters, coolant, and other service items made unusable by the defect.
- Provide reasonable and customary labor needed to correct the defect, including labor to disconnect the product from and reconnect the product to its attached equipment, mounting, and support systems, if required.

For new 3114, 3116, and 3126 engines and, new and Caterpillar rebuild electric

power generation products (which includes the following: any new products of other manufacturers packaged and sold by Caterpillar)

- Provide travel labor, up to four hours round trip, if in the opinion of Caterpillar, the product cannot reasonably be transported to a place of business of a Cat dealer or other source approved by Caterpillar (travel labor in excess of four hours round trip, and any meals, mileage, lodging, etc. is the user's responsibility).

For all other products:

- Provide reasonable travel expenses for authorized mechanics, including meals, mileage, and lodging, when Caterpillar chooses to make the repair on-site.

User Responsibilities

The user is responsible for:

- Providing proof of the delivery date to the first user.
- Labor costs, except as stated under "Caterpillar Responsibilities," including costs beyond those required to disconnect the product from and reconnect the product to its attached equipment, mounting, and support systems.
- Travel or transporting costs, except as stated under "Caterpillar Responsibilities."
- Premium or overtime labor costs.
- Parts shipping charges in excess of those that are usual and customary.
- Local taxes, if applicable.
- Costs to investigate complaints, unless the problem is caused by a defect in Caterpillar material or workmanship.
- Giving timely notice of a warrantable failure and promptly making the product available for repair.
- Performance of the required maintenance (including use of proper fuel, oil, lubricants, and coolant) and items replaced due to normal wear and tear.
- Allowing Caterpillar access to all electronically stored data.

Limitations

Caterpillar is not responsible for:

- Failures resulting from any use or installation that Caterpillar judges improper.
- Failures resulting from attachments, accessory items, and parts not sold or approved by Caterpillar.
- Failures resulting from abuse, neglect, and/or improper repair.
- Failures resulting from user's delay in making the product available after being notified of a potential product problem.
- Failures resulting from unauthorized repairs or adjustments, and unauthorized fuel setting changes.
- Damage to parts, fixtures, housings, attachments, and accessory items that are not part of the engine, Cat Selective Catalytic Reduction System or electric power generation product (including any products of other manufacturers packaged and sold by Caterpillar).
- Repair of components sold by Caterpillar that is warranted directly to the user by their respective manufacturer. Depending on type of application, certain exclusions may apply. Consult your Cat dealer for more information.

PLEASE SEE IMPORTANT TERMS AND CONDITIONS ON PAGE 3 & 4

(Continued on reverse side…)

This warranty covers every major component of the products. Claims under this warranty should be submitted to a place of business of a Cat dealer or other source approved by Caterpillar. For further information concerning either the location to submit claims or Caterpillar as the issuer of this warranty, write Caterpillar Inc., 100 N.E. Adams St., Peoria, IL USA 61629, telephone 1 (309) 675-1000, or go to URL, www.cat.com, Find Your Dealer.

Caterpillar's obligations under this Limited Warranty are subject to, and shall not apply in contravention of, the laws, rules, regulations, directives, ordinances, orders, or statutes of the United States, or of any other applicable jurisdiction, without recourse or liability with respect to Caterpillar.

A) For products operating outside of Australia, Fiji, Nauru, New Caledonia, New Zealand, Papua New Guinea, the Solomon Islands, and Tahiti, the following is applicable:

NEITHER THE FOREGOING EXPRESS WARRANTY NOR ANY OTHER WARRANTY BY CATERPILLAR, EXPRESS OR IMPLIED, IS APPLICABLE TO ANY ITEM CATERPILLAR SELLS THAT IS WARRANTED DIRECTLY TO THE USER BY ITS MANUFACTURER.

THIS WARRANTY IS EXPRESSLY IN LIEU OF ANY OTHER WARRANTIES, EXPRESS OR IMPLIED, INCLUDING ANY WARRANTY OF MERCHANTABILITY OR FITNESS FOR A PARTICULAR PURPOSE, EXCEPT CATERPILLAR EMISSION-RELATED COMPONENT WARRANTIES FOR NEW ENGINES, WHERE APPLICABLE. REMEDIES UNDER THIS WARRANTY ARE LIMITED TO THE PROVISION OF MATERIAL AND SERVICES, AS SPECIFIED HEREIN.

CATERPILLAR IS NOT RESPONSIBLE FOR INCIDENTAL OR CONSEQUENTIAL DAMAGES.

CATERPILLAR EXCLUDES ALL LIABILITY FOR OR ARISING FROM ANY NEGLIGENCE ON ITS PART OR ON THE PART OF ANY OF ITS EMPLOYEES, AGENTS, OR REPRESENTATIVES IN RESPECT OF THE MANUFACTURE OR SUPPLY OF GOODS OR THE PROVISION OF SERVICES RELATING TO THE GOODS.

IF OTHERWISE APPLICABLE, THE VIENNA CONVENTION ON CONTRACTS FOR THE INTERNATIONAL SALE OF GOODS IS EXCLUDED IN ITS ENTIRETY.

For personal or family use engines or electric power generation products, operating in the USA, its territories and possessions, some states do not allow limitations on how long an implied warranty may last nor allow the exclusion or limitation of incidental or consequential damages. Therefore, the previously expressed exclusion may not apply to you. This warranty gives you specific legal rights and you may also have other rights, which vary by jurisdiction. To find the location of the nearest Cat dealer or other authorized repair facility, call (800) 447-4986. If you have questions concerning this warranty or its applications, call or write:

In USA and Canada: Caterpillar Inc, 100 N.E. Adams St., Peoria, IL USA 61629, Attention: Customer Service Manager, Telephone 1 (309) 675-1000. Outside the USA and Canada: Contact your Cat dealer, go to URL, www.cat.com, Find Your Dealer.

B) For products operating in Australia, Fiji, Nauru, New Caledonia, New Zealand, Papua New Guinea, the Solomon Islands, and Tahiti, the following is applicable:

THIS WARRANTY IS IN ADDITION TO WARRANTIES AND CONDITIONS IMPLIED BY STATUTE AND OTHER STATUTORY RIGHTS AND OBLIGATIONS THAT BY ANY APPLICABLE LAW CANNOT BE EXCLUDED, RESTRICTED, OR MODIFIED ("MANDATORY RIGHTS"). ALL OTHER WARRANTIES OR CONDITIONS, EXPRESS OR IMPLIED (BY STATUTE OR OTHERWISE), ARE EXCLUDED. WITHOUT LIMITING THE FOREGOING PROVISIONS OF THIS PARAGRAPH, WHERE A PRODUCT IS SUPPLIED FOR BUSINESS PURPOSES, THE CONSUMER GUARANTEES UNDER THE CONSUMER GUARANTEES ACT 1993 (NZ) WILL NOT APPLY.

NEITHER THIS WARRANTY NOR ANY OTHER CONDITION OR WARRANTY BY CATERPILLAR, EXPRESS OR IMPLIED (SUBJECT ONLY TO THE MANDATORY RIGHTS), IS APPLICABLE TO ANY ITEM CATERPILLAR SELLS THAT IS WARRANTED DIRECTLY TO THE USER BY ITS MANUFACTURER.

IF THE MANDATORY RIGHTS MAKE CATERPILLAR LIABLE IN CONNECTION WITH SERVICES OR GOODS, THEN TO THE EXTENT PERMITTED UNDER THE MANDATORY RIGHTS, THAT LIABILITY SHALL BE LIMITED AT CATERPILLAR'S OPTION TO (a) IN THE CASE OF SERVICES, THE SUPPLY OF THE SERVICES AGAIN OR THE PAYMENT OF THE COST OF HAVING THE SERVICES SUPPLIED AGAIN AND (b) IN THE CASE OF GOODS, THE REPAIR OR REPLACEMENT OF THE GOODS, THE SUPPLY OF EQUIVALENT GOODS, THE PAYMENT OF THE COST OF SUCH REPAIR OR REPLACEMENT OR THE ACQUISITION OF EQUIVALENT GOODS.

CATERPILLAR EXCLUDES ALL LIABILITY FOR OR ARISING FROM ANY NEGLIGENCE ON ITS PART OR ON THE PART OF ANY OF ITS EMPLOYEES, AGENTS OR REPRESENTATIVES IN RESPECT OF THE MANUFACTURE OR SUPPLY OF GOODS OR THE PROVISION OF SERVICES RELATING TO THE GOODS.

CATERPILLAR IS NOT LIABLE FOR INCIDENTAL OR CONSEQUENTIAL DAMAGES UNLESS IMPOSED UNDER MANDATORY RIGHTS.

IF OTHERWISE APPLICABLE, THE VIENNA CONVENTION ON CONTRACTS FOR THE INTERNATIONAL SALE OF GOODS IS EXCLUDED IN ITS ENTIRETY.

C) For products supplied in Australia:

IF THE PRODUCTS TO WHICH THIS WARRANTY APPLIES ARE:

I. PRODUCTS OF A KIND ORDINARILY ACQUIRED FOR PERSONAL, DOMESTIC OR HOUSEHOLD USE OR CONSUMPTION; OR

II. PRODUCTS THAT COST AUD 100,000 OR LESS,

WHERE THOSE PRODUCTS WERE NOT ACQUIRED FOR THE PURPOSE OF RE-SUPPLY OR FOR THE PURPOSE OF USING THEM UP OR TRANSFORMING THEM IN THE COURSE OF PRODUCTION OR MANUFACTURE OR IN THE COURSE OF REPAIRING OTHER GOODS OR FIXTURES, THEN THIS SECTION C APPLIES.

THE FOLLOWING MANDATORY TEXT IS INCLUDED PURSUANT TO THE AUSTRALIAN CONSUMER LAW AND INCLUDES REFERENCES TO RIGHTS THE USER MAY HAVE AGAINST THE DIRECT SUPPLIER OF THE PRODUCTS: OUR GOODS COME WITH GUARANTEES THAT CANNOT BE EXCLUDED UNDER THE AUSTRALIAN CONSUMER LAW. YOU ARE ENTITLED TO A REPLACEMENT OR REFUND FOR A MAJOR FAILURE AND

(Continued on reverse side…)

COMPENSATION FOR ANY OTHER REASONABLY FORESEEABLE LOSS OR DAMAGE. YOU ARE ALSO ENTITLED TO HAVE THE GOODS REPAIRED OR REPLACED IF THE GOODS FAIL TO BE OF ACCEPTABLE QUALITY AND THE FAILURE DOES NOT AMOUNT TO A MAJOR FAILURE. THE INCLUSION OF THIS TEXT DOES NOT CONSTITUTE ANY REPRESENTATION OR ACCEPTANCE BY CATERPILLAR OF LIABILITY TO THE USER OR ANY OTHER PERSON IN ADDITION TO THAT WHICH CATERPILLAR MAY HAVE UNDER THE AUSTRALIAN CONSUMER LAW.

TO THE EXTENT THE PRODUCTS FALL WITHIN THIS SECTION C BUT ARE NOT OF A KIND ORDINARILY ACQUIRED FOR PERSONAL, DOMESTIC OR HOUSEHOLD USE OR CONSUMPTION, CATERPILLAR LIMITS ITS LIABILITY TO THE EXTENT IT IS PERMITTED TO DO SO UNDER THE AUSTRALIAN CONSUMER LAW TO, AT ITS OPTION, THE REPAIR OR REPLACEMENT OF THE PRODUCTS, THE SUPPLY OF EQUIVALENT PRODUCTS, OR THE PAYMENT OF THE COST OF SUCH REPAIR OR REPLACEMENT OR THE ACQUISITION OF EQUIVALENT PRODUCTS.

THE WARRANTY SET OUT IN THIS DOCUMENT IS GIVEN BY CATERPILLAR INC. OR ANY OF ITS SUBSIDIARIES, 100 N. E. ADAMS ST, PEORIA, IL USA 61629, TELEPHONE 1 309 675 1000,THE USER IS RESPONSIBLE FOR ALL COSTS ASSOCIATED WITH MAKING A CLAIM UNDER THE WARRANTY SET OUT IN THIS DOCUMENT, EXCEPT AS EXPRESSLY STATED OTHERWISE IN THIS DOCUMENT, AND THE USER IS REFERRED TO THE BALANCE OF THE DOCUMENT TERMS CONCERNING CLAIM PROCEDURES, CATERPILLAR RESPONSIBILITIES AND USER RESPONSIBILITIES.

TO THE EXTENT PERMISSIBLE BY LAW, THE TERMS SET OUT IN THE REMAINDER OF THIS WARRANTY DOCUMENT (INCLUDING SECTION B) CONTINUE TO APPLY TO PRODUCTS TO WHICH THIS SECTION C APPLIES.

© 2024 Caterpillar. All Rights Reserved.
CAT, CATERPILLAR, LET'S DO THE WORK,their respective logos, "Caterpillar Corporate Yellow", the "Power Edge" and Cat "Modern Hex" trade dress as well as corporate and product identity used herein, are trademarks of Caterpillar and may not be used without permission.

CAT®

Enhanced User Experience

Section I. Overview
Advanced GUI / HMI System

1.01 Typical Hardware and Features

The HMI system operates on an industrial computer with 19.5”, 22” or 27” wide screen operator interface touch screen panels. The HMI access PLCs’ setpoints, engine sequencing, display system status and alarms, and to enable certain control functions.

- **System Oneline Screen:** The System Oneline screen will display the generator power in kW and the operating status (running / stopped / not available / faulted), the status for each circuit breaker in the system (open / closed / tripped / arm, etc.), the status of bus (energized / de-energized), and the status of the automatic transfer switches (ATS). System and Login status is displayed in the Banner.
- **Metering Screens:** Devices will be polled for their respective data points. (IF AVAILABLE)
  - a) Caterpillar Engines
  - b) Circuit Breakers
  - c) Power Metering
- **Menu Screen:** The menu screen will index all the screens used on the GUI / HMI system.
- **PLC Communication Status** is in the top right portion of the Banner: The PLC Comm Statuses will be monitored on every screen as a quick reference if a PLC is faulted. Or which PLC is in Lead.
- **System Control Screen:** The System Control Screen will typically have the Master Mode Switch. System controls such as a No-load Test can be activated through this screen. For testing purposes, the Utility Fail Test Switch is located here as well, if applicable.
- **Generator Demand Setpoints Screen:** The generator demand setpoints screen will display the generator demand parameters. The operator may select which mode of operation they wish to operate in and adjust these setpoints from this screen as well as enable/disable generator demand operation, and initiate a generator increase sequence, and change the sequence of the engines. Runtime and the status of the engines are also available.
- **Login Screen:** The security login screen allows an operator to log into the system in order to make system parameter and operational changes.

Overview

- **Realtime Trending:** Trending screens that will compare power parameters of selective devices in Realtime.
- **Historical Trending:** Trending screens that will compare power parameters of selective devices historically stored.
- **Load Control Setpoints Screen:** The load control setpoints screen will display the overload %kW setpoint, overload timer setpoint, auto/bypass load control, current load step and load shed activated.
- **Report Screen:** Total System Plant Report, Generator Tuning and Settings Reports are available in our basic systems. More complex solutions may include Joint Commission Report, ATS Report, Emissions Report, Generator Fault Analysis Report and any other custom reports.
- **Network Diagram:** Systems with Managed Switches brings an additional layer of security to your Cat® Switchgear Network. The managed switches are displayed via the switch lineup and show the status of each port and include alarms.
- **Alarm/Event History Screen:** The alarm/event history screen will display the last 1024 alarms and events and allow an operator access to logged alarm/event history files, which can be stored indefinitely (default setting one year).
- **Help Screen:** The help screen can be accessed from anywhere within the system. With the new quick Help Button on the banner and tooltips throughout the screens, it's even easier to operate the Cat Switchgear HMI System.
- **Transfer Switch Detail Screen:**
  The Cat (ATS) Screen is configured to display information for numerous Automatic Transfer Switches over a RS-485 serial Modbus or Modbus TCP/IP network.
- **Tech-Link - optional:** Service & Support You Can Rely On. Tech-Link is an intelligent remote access system that serves as an endpoint for secure remote connections. The system is a service tool that allows code-level support from certified factory engineers. Devices connected to Tech-Link are securely accessed over the Internet and most LAN and WAN networks through an encrypted VPN connection. Tech-Link is NAT and firewall friendly.
  Tech-Link is especially designed for industrial environments and its robust housing offers better installation possibilities e.g. on DIN rails.
- **Alerts and Notifications:** Cat Switchgear HMI provides users with real-time alerts and changes in power equipment and conditions through Alarm Screens that are viewable on all the Switchgear displays. When customer specified alarms occur, the Cat Switchgear HMI can send email and text alerts.
- **Tablet Access - optional:** Having Tablet Access is important in this industry because it provides flexibility to operate the System at a distance from the Switchgear. For Users who desire the added convenience and safety of operating their system with a tablet, we offer this feature. The experience will be the same as if you're in front of the switchgear HMI. At Caterpillar our focus is SAFETY and that doesn't just apply to our employees, that also extends to our customers. This is optional

Light Mode / Dark Mode

Section II. User Experience.

The new HMI introduces a bold new look, with major updates to the screens, new ways to help you protect your system, and improvements across the entire system. The HMI is faster and more intuitive to use. We've designed the HMI based on Soft Ergonomics methodology. Soft Ergonomics finds a compromise between user expectations, system workflow and aesthetics.

2.01 Light Mode / Dark Mode

Light / Dark Mode introduces a dramatic new look for Cat Switchgear HMI. It's thoughtfully designed to make every element on the screen easier on your eyes with seamless integration throughout the system. And it's simple to select from the Banner or automatically switch on at night from the System Settings Screen. This feature was implemented for personal preference or environmental challenges. Whether the Switchgear is indoors in a dark room or outdoors in the bright sun, the Light / Dark mode can accommodate to ensure that the graphics are not washed out.

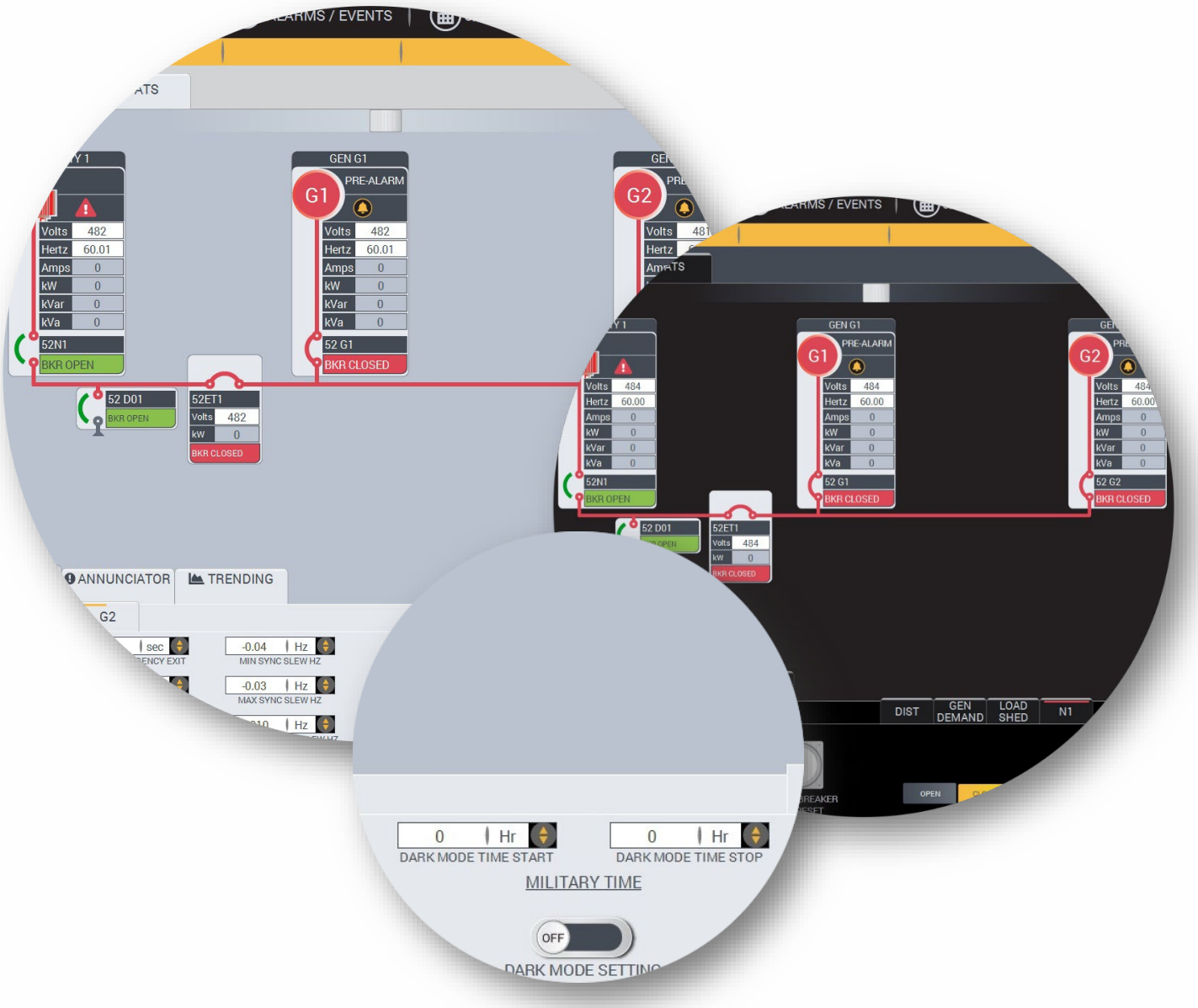

2.02 New Control Center

The most impressive feature about the **Control Center** methodology is that you can navigate to more than 90% of the screens while maintaining view of the Overview Oneline. This is a gamechanger in the Electric Power industry because the power lineup is the most important screen when operating the plant. Imagine a navigation system so intuitive that you wouldn't need a main menu screen to navigate to the desired screen. This reduces training time and improves operator comfort and confidence levels.

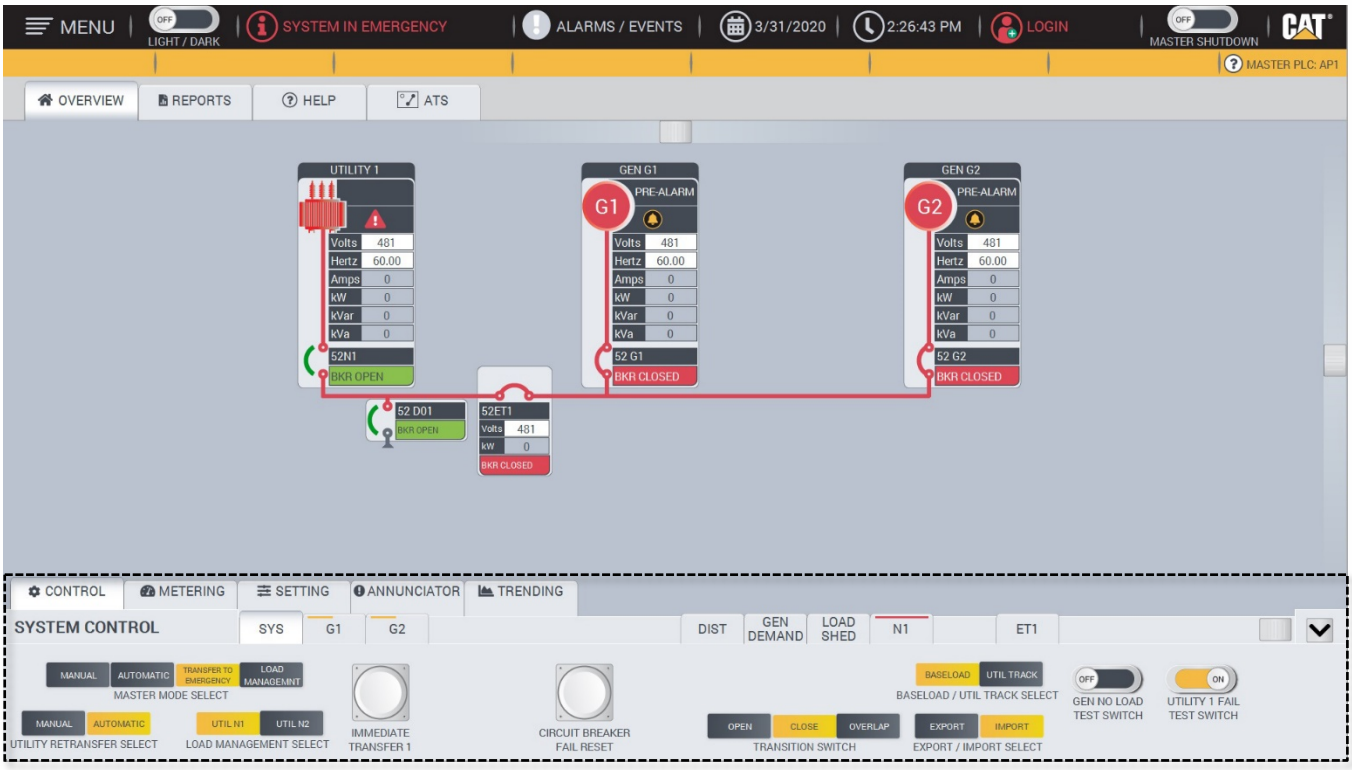

Here are some extraordinary features included with the **Control Center**

- The top navigation features screens that are not directly associated with operating the System, Generator, Utility, Ties or Distribution.
    - The operator is one step away from the Reports Screen, Help Screen or ATS Screen
- The **Control Center** at the bottom of the screen features screens that are directly associated with operating the gear, such as the System, Generator, Utility, Ties and Distribution.
- When clicking on a primary tab it automatically gives you access to the associated screens via the subtabs.
    - For example, when clicking on the primary tab Control the subtabs associated are System, Generators, Distribution, Gen Demand, Load Shed, Utility and Tie.

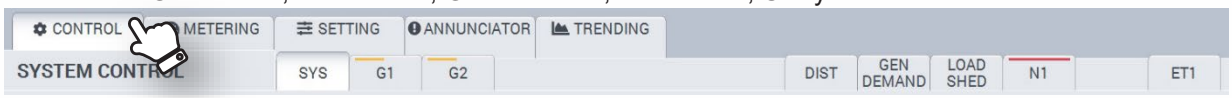

- The Control Center is so intuitive that when you click on Setting, the Distribution and Generator Demand subtab disappears.

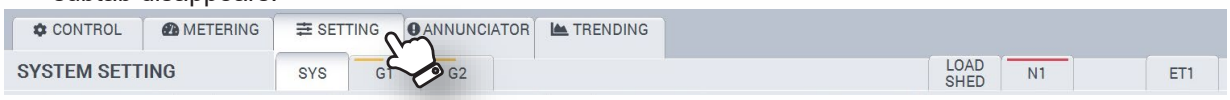

The operator is literally no more than two clicks away from navigating to any screen, and in most cases one click away.

Help features and tooltips

2.03 Seamless Help features and tooltips
With the new quick Help Button on the banner and tooltips throughout the screens, it's even easier to operate the Cat Switchgear HMI System.

When the tooltip icon appears, simply touch it to reveal a detailed message of the problem. Clicking on the Help Button allows access to valuable help documents / information.

The first tab explains the icons and buttons functionality.

The second tab explains the Generator Symbols, Utility Symbols and breaker statuses.

The third tab gives the operator access to the system Operator Manual and Drawings. (If applicable)

The fourth tab explains the System Modes within the project.

The fifth tab has instructional videos for troubleshooting and Modes of Operation

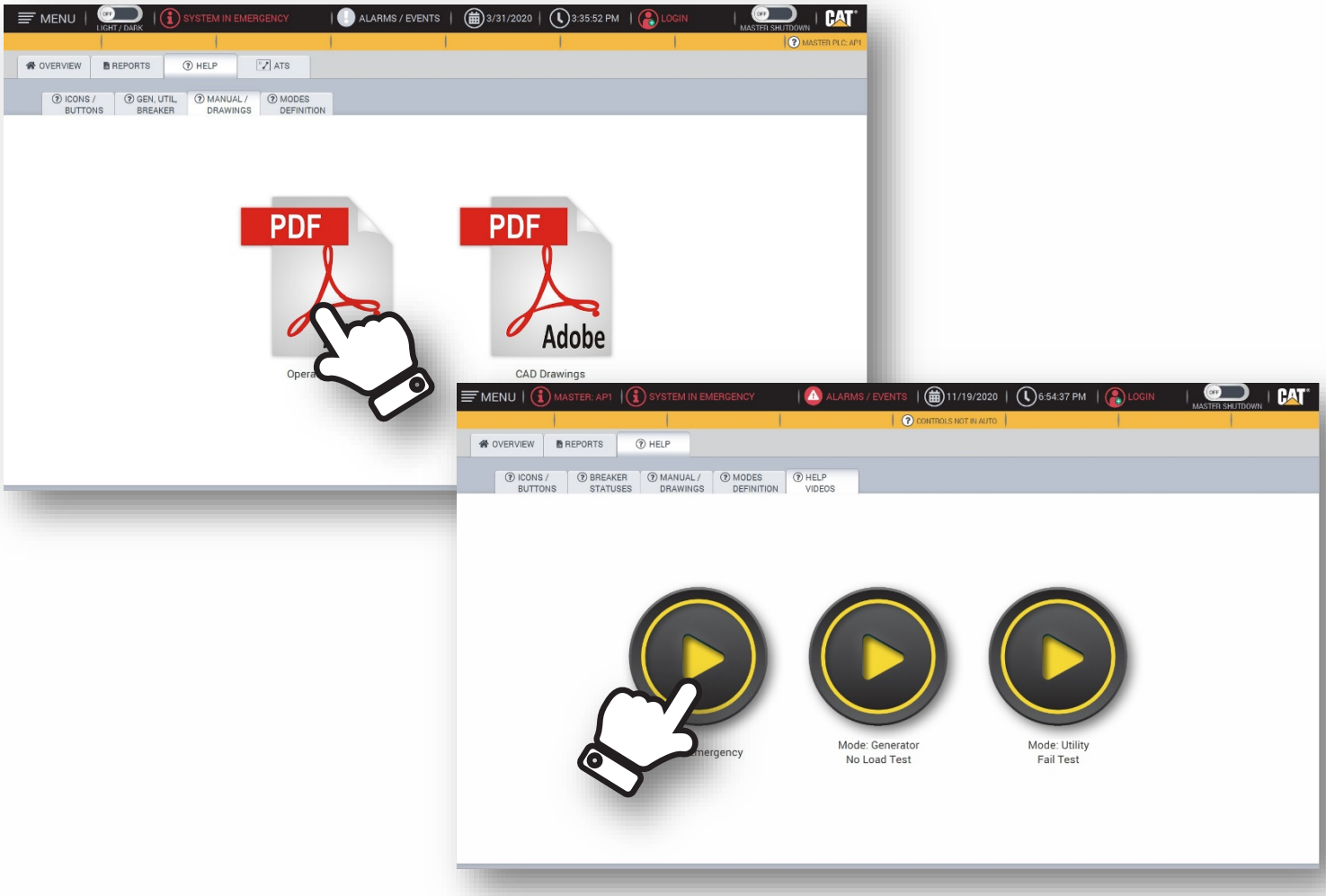

Push Notifications

2.04 Push Notifications Integration

The push notifications detect when the system is transitioning from one mode to the next and automatically pops up in the top right corner of the banner. The notification will display a series of events that have to happen before entering that mode. The series of lights, depending upon the sequence, may not progress from left to right.

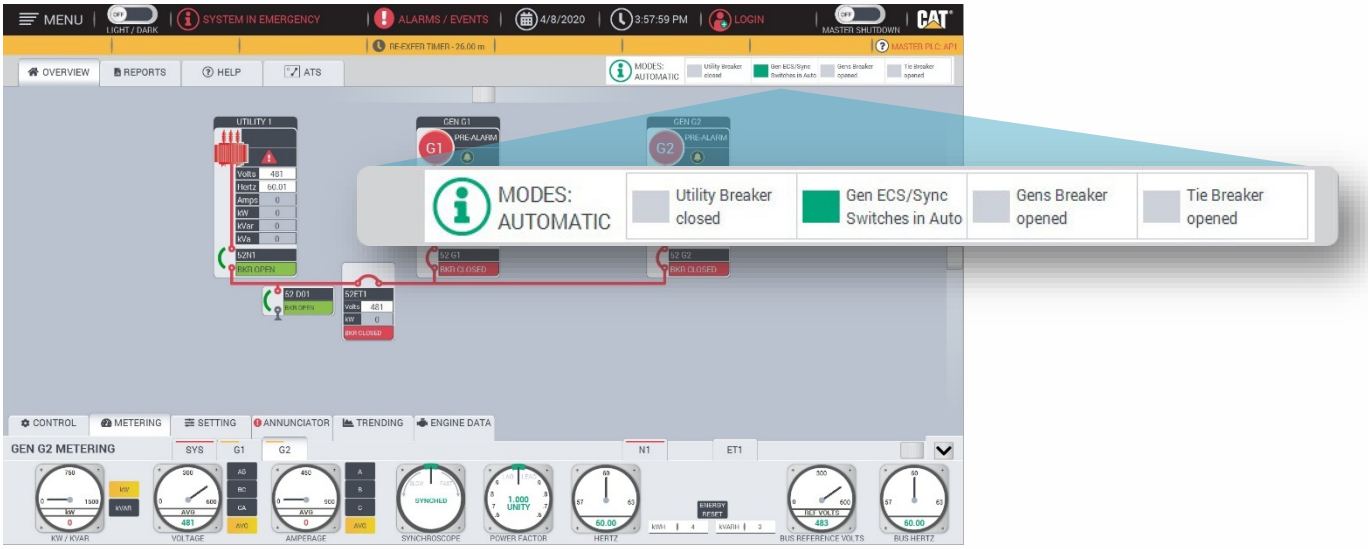

In the example above, the system is transitioning from Emergency Mode to Automatic Mode. In order to transition to Automatic Mode the Utility Breaker must close, the Generator ECS and Sync Switches should be in Automatic, the Generator Breakers must be open, and the Tie Breaker must be open. If, at any point the light does not illuminate, the operator can simply go to the Alarms and Events Summary or click on the Tooltip Icon for more information. Once the system completes the transition the popup disappears. To see the mode definitions simply click on the information icon ⓘ in the Banner or click the Help Button.

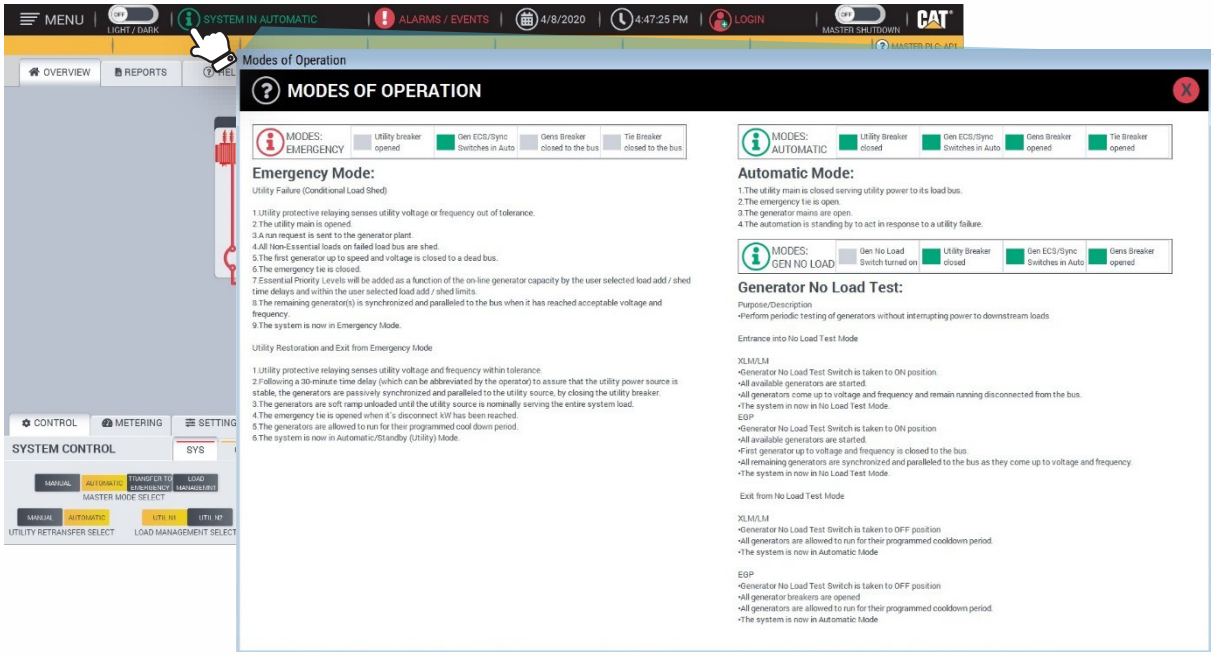

All Controls Screen

2.05 All Controls Screen

The All Controls Screen allows the operator to see and operate the main control switches from one centralized location. This is another troubleshooting screen to make sure that your main controls are in the Automatic position. Making sure that your controls are in the Automatic position ensures that the system will respond properly if a power outage occurs.

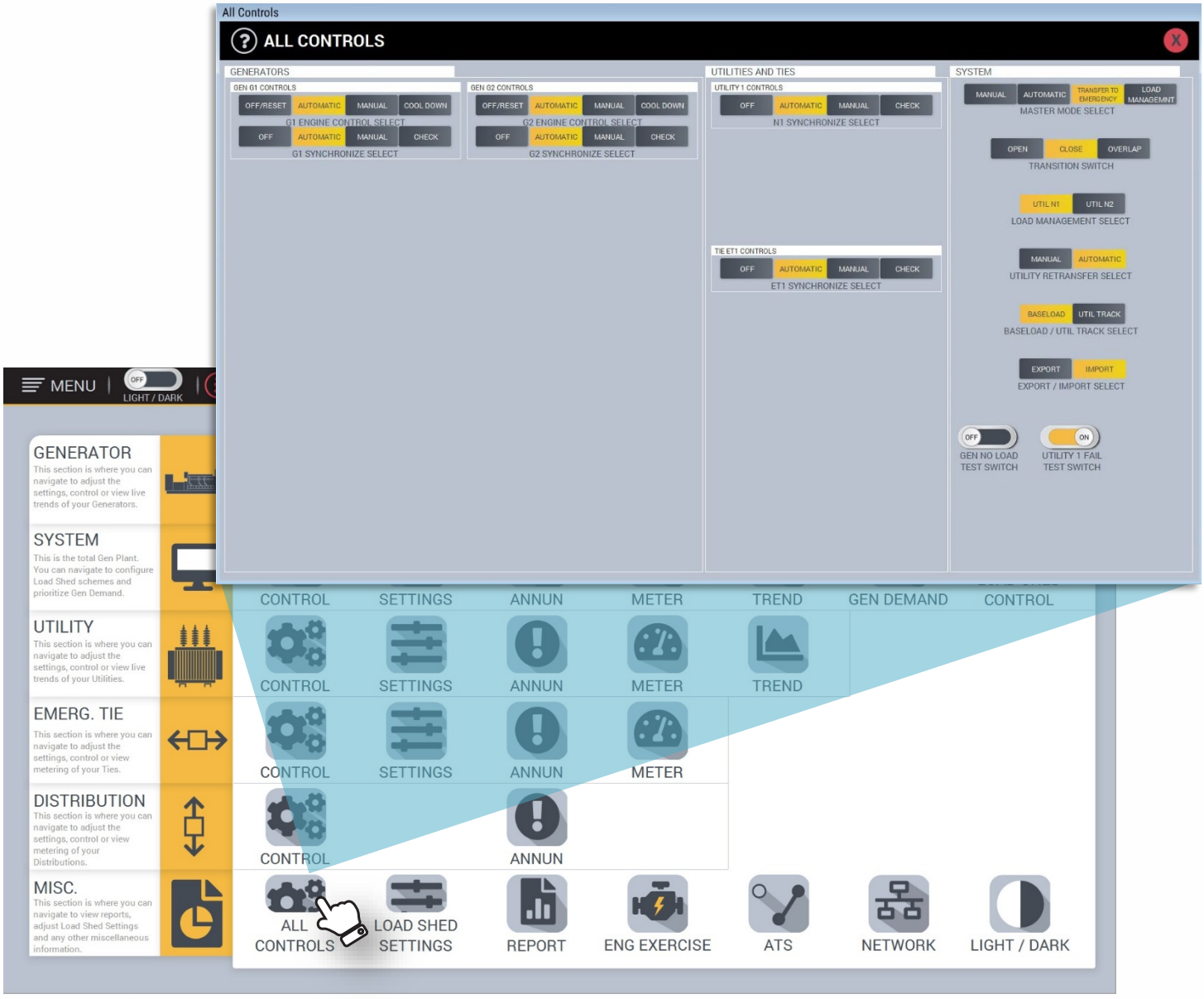

Network Diagram - Optional

2.06 Network Diagram - Optional

Systems with Managed Switches adds an extra layer of security to your Cat Switchgear Network. With managed switches we can display the switch lineup and show the status of each port. Knowing the status of your network switches ensures reliability and a means of rapid troubleshooting. We offer various network configurations, including Redundant networks.

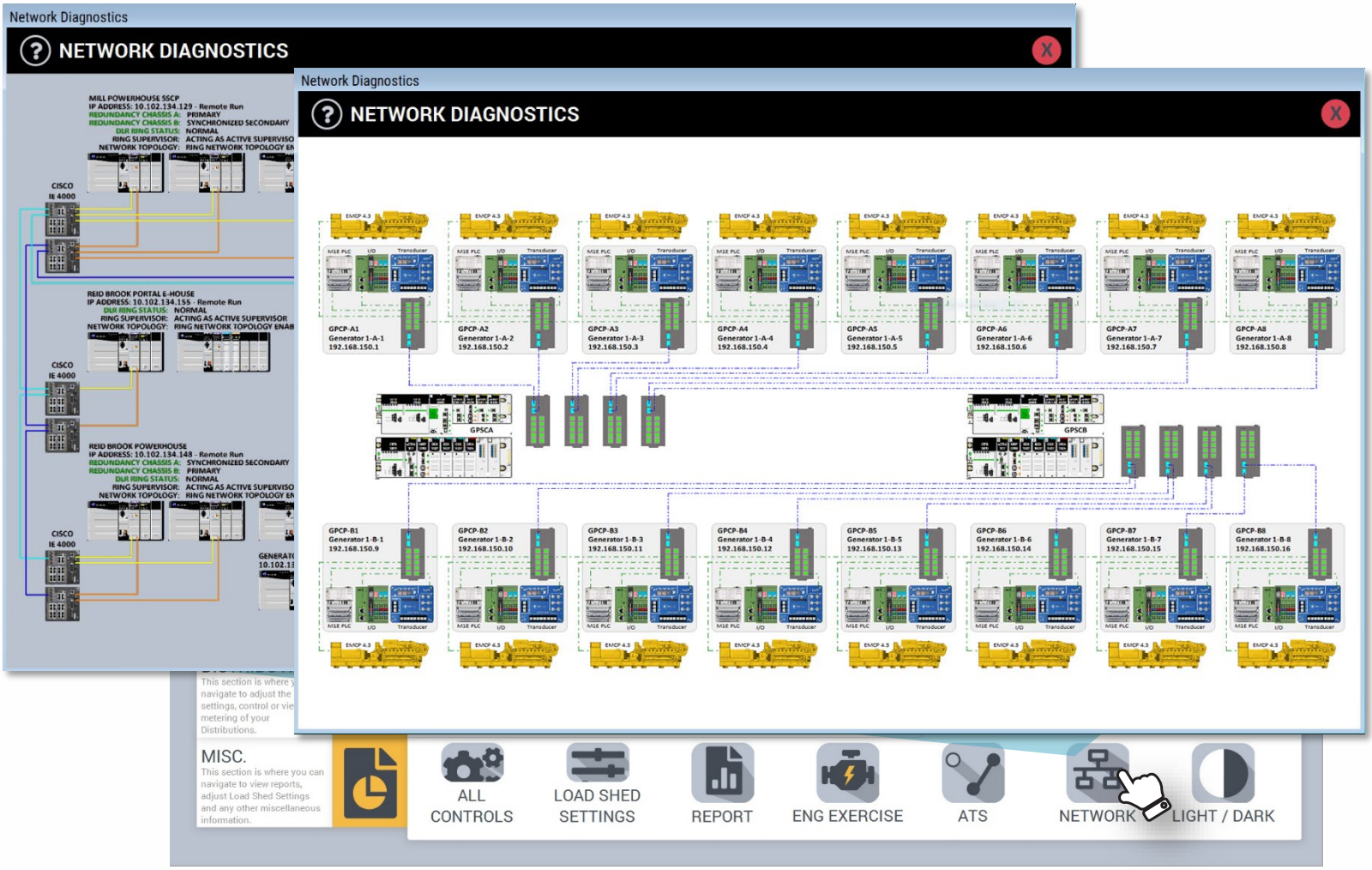

Tablet Access - Optional

2.07 Tablet Access - Optional

Having Tablet Access is important in this industry because it provides flexibility to operate the System at a distance from the Switchgear. For Users who desire the added convenience and safety of operating their system with a tablet, we offer this feature. The experience will be the same as if you're in front of the switchgear HMI. At Caterpillar our focus is SAFETY and that doesn't just apply to our employees, that also extends to our customers.

Advanced Analytics – Reports

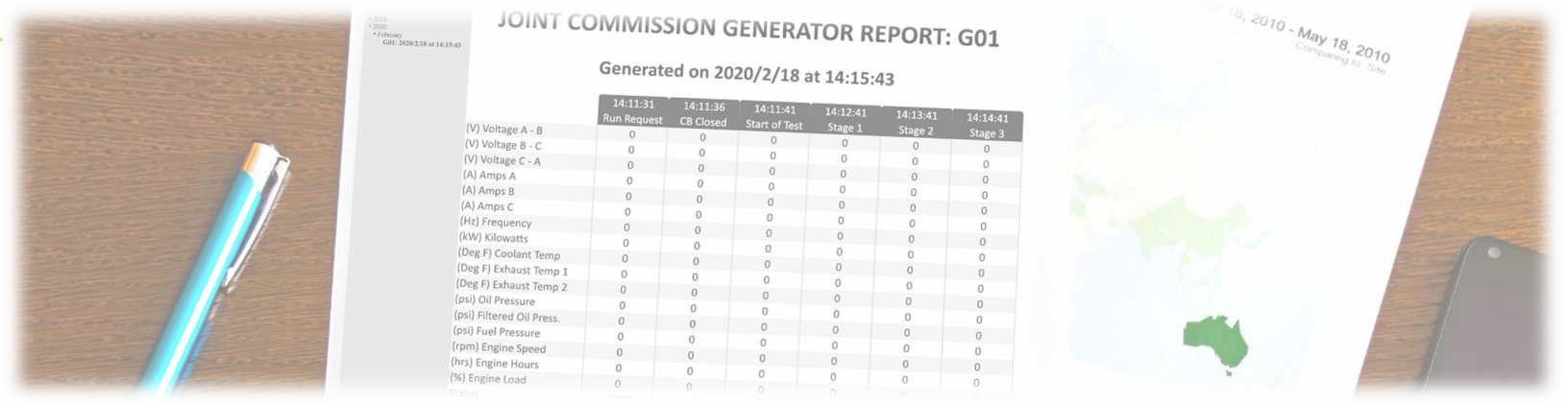

Section III. Advanced GUI / HMI Capabilities

3.01 Advanced Analytics – Reports

In the United States, the Centers for Medicare & Medicaid Services, reporting through to the Secretary of the Department of Health and Human Services (DHHS), have the responsibility to certify if a hospital or healthcare provider is approved to receive Medicare and/or Medicaid funding. That report is the Joint Commission Report and NFPA 110 provides guidance for emergency power system testing. Cat Switchgear HMI automatically compiles and evaluates operating data and prepares corresponding reports. The Joint Commission states that over 82% of all hospitals in the US are accredited. For those hospitals that have received, and plan to keep, Joint Commission accreditation, the elements of performance outlined in the Environment of Care Chapter must be met. We automate the report to reduce opportunity for human error and simplify / streamline the process?

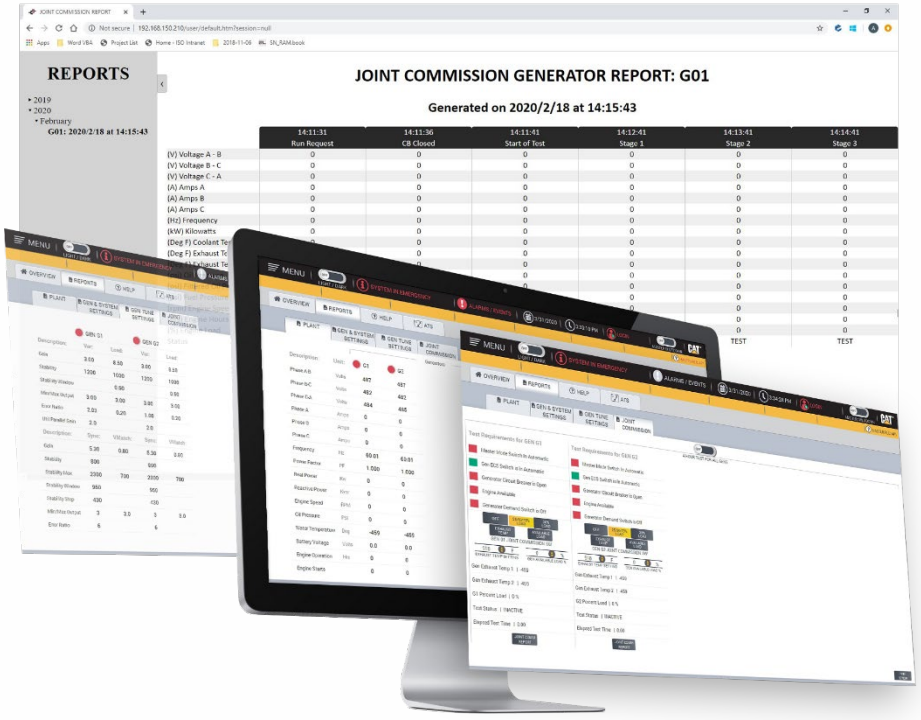

Total System Plant Report, Generator Tuning and Settings Reports are also available in our basic systems. More complex systems include ATS Report, Emissions Report, Generator Fault Analysis Report and any other custom solutions.

NFPA 110
NATIONAL FIRE PROTECTION ASSOCIATION
The leading information and knowledge resource on fire, electrical and related hazards
CODES & STANDARDS | ELECTRICAL SOLUTIONS | NEWS & RESEARCH | TRAINING & CER

Trending

3.02 Trending

The Cat Switchgear HMI offers several levels of trend analysis for assessing power equipment performance. Trending screens for essential power information, Utility information and System (total Generator) information. Historical Trending is available upon request. Typically, 6 months of historical data is saved via a DAT file and creates a new file each day that can be opened with Excel or other data analysis applications.

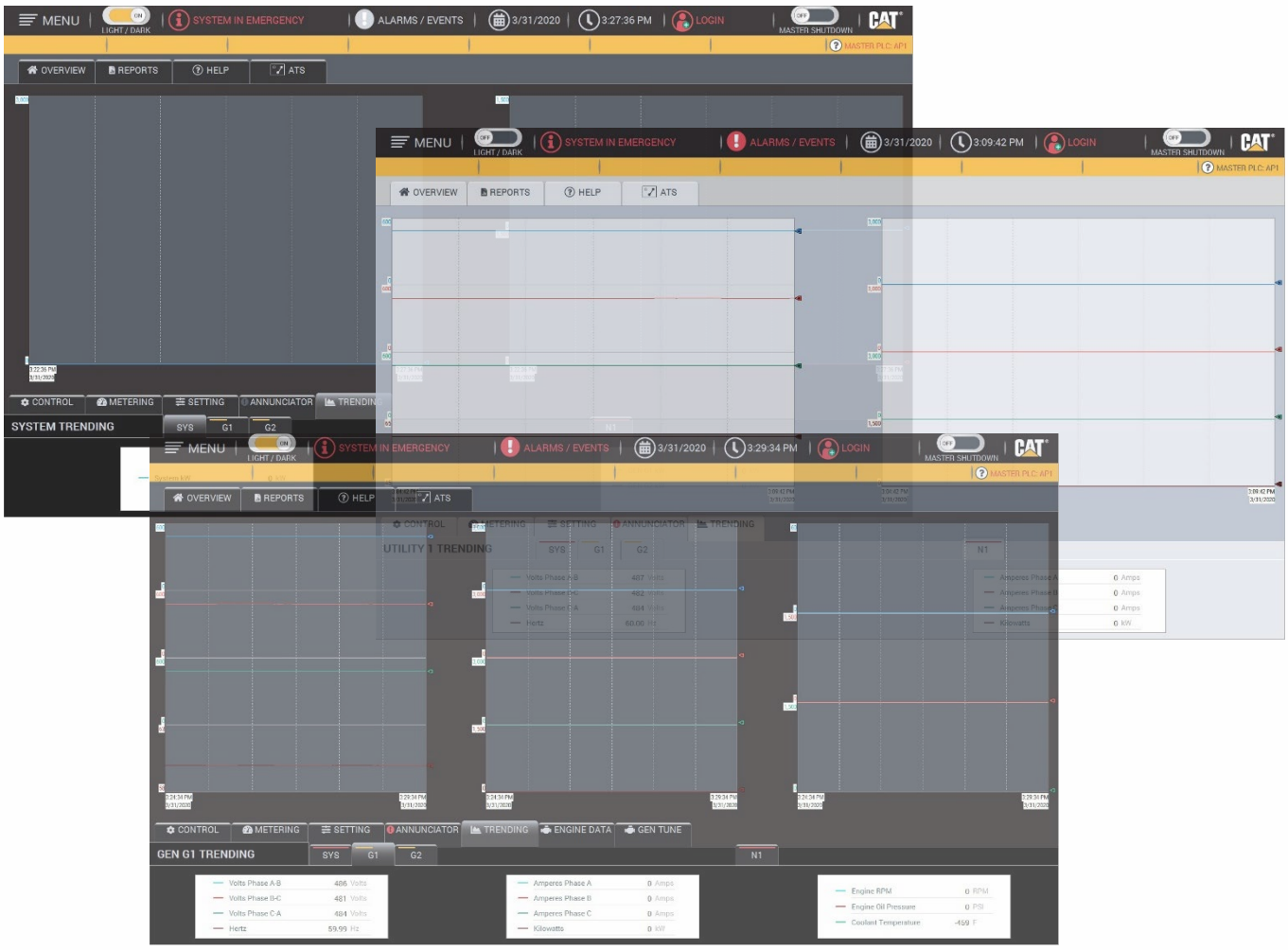

Custom Trending

Custom Trending are available as well. Our customers have access to all the tags within the HMI and can create their own trends. You can choose between live tags or historical tags and create endless amounts of trends that compares historic information from one device or concurrent data from multiple units.

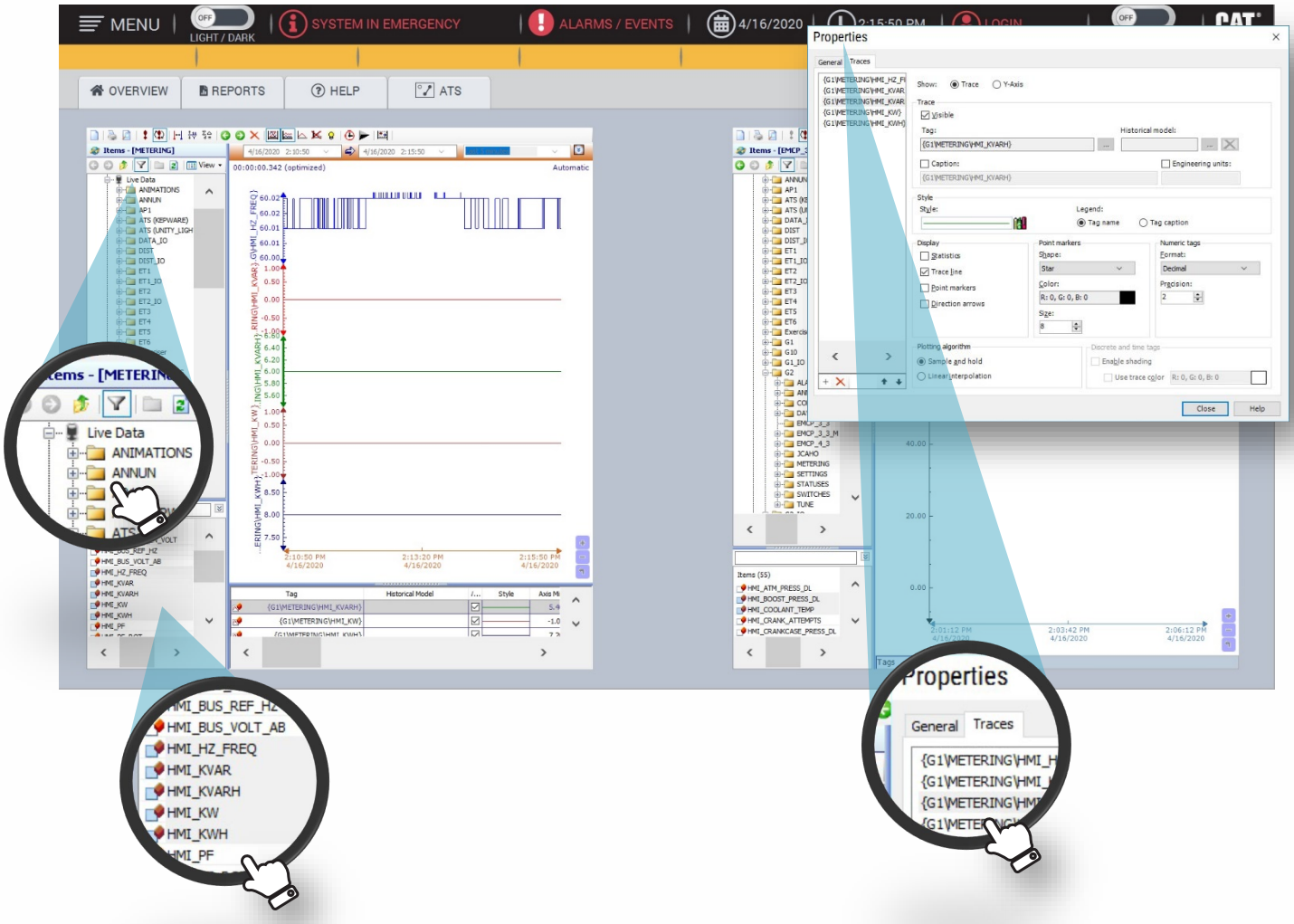

Generator Demand Screen

3.03 Generator Demand

The Generator Demand Screen allows the operator to make the most efficient use of available Genset capacity. Upon entrance into Emergency or Load Management modes, all generators shall be started and paralleled to the bus. After the adjustable Remove Time Delay, generators shall be removed from the bus in descending priority order (i.e. Generator Priority #3 removed first, Generator Priority #2 removed second) when the bus load drops under the Remove Setpoint of each Generator. The remove setpoint is a function of the generator kW rating minus a minimum reserve Setpoint as well as Remove differential.

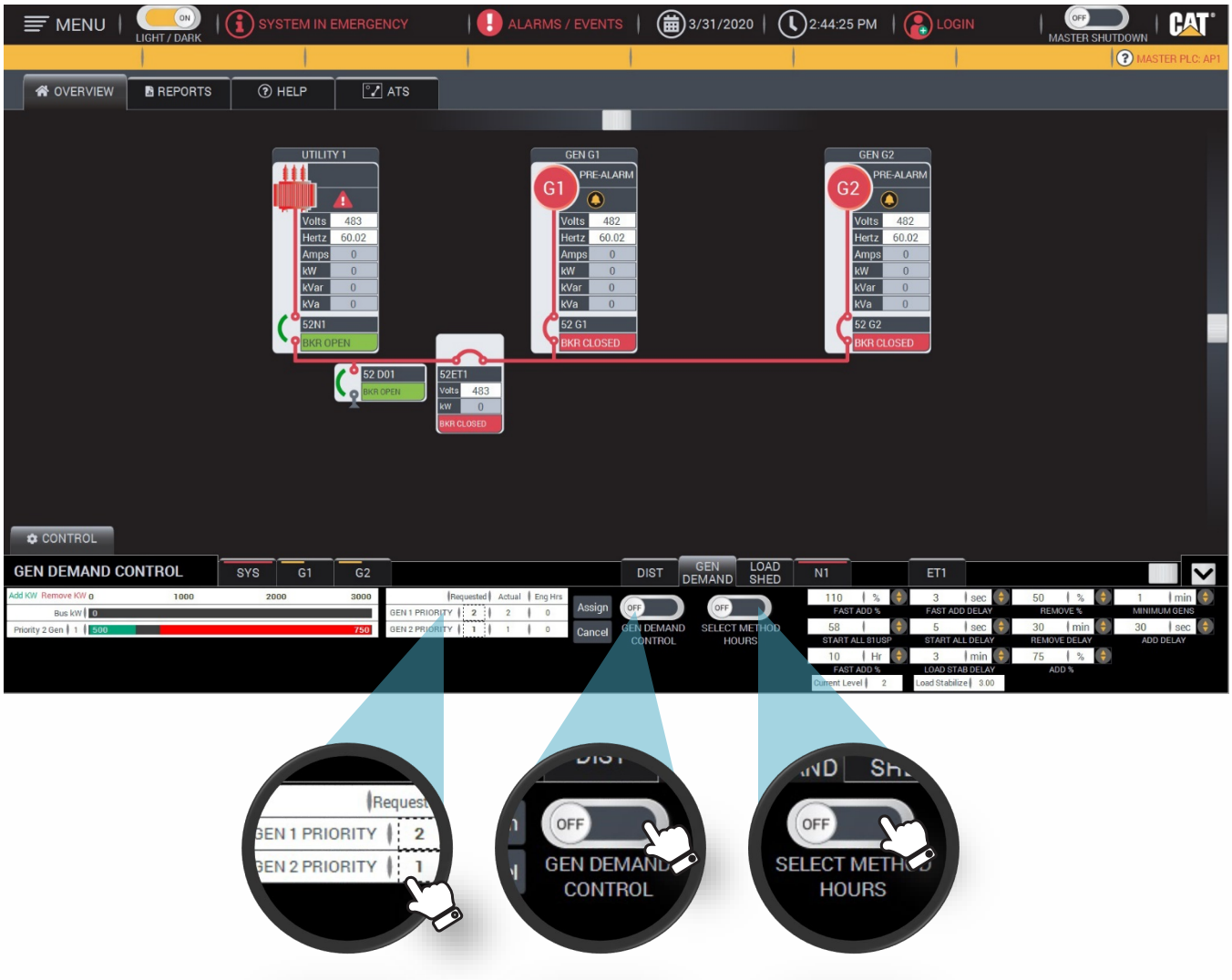

Simply set the Priority, turn on the Generator Demand Switch and you're done. Additionally, you can choose to allow priority to be set by Generator Hours by moving the Select Method Hours switch to the On position.

Load Shed Screen

3.04 Load Shed Scheme

The Load Shed Control shall have one Essential Load Shed Priority Level for each generator in the system plus one Non-Essential Load Shed Priority Level (which is always shed in the Emergency Mode of operation). The Load Shed Control shall provide a 4 pole, 10A, 120VAC rated, form C set of contacts for each Load Shed Priority Level to allow the control of loads external to the Emergency Generator Paralleling Switchboard.

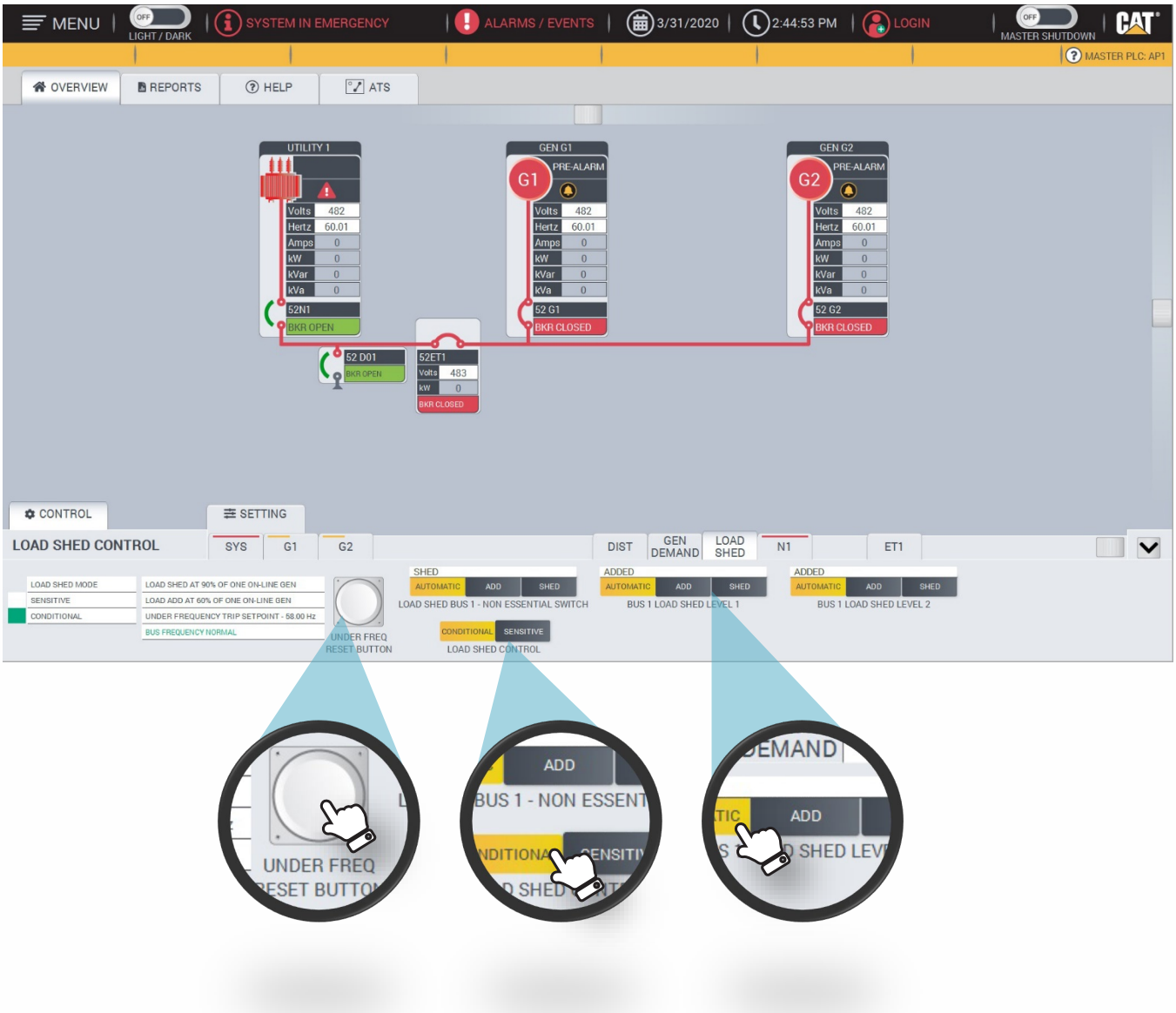

Conditional Load Shed: Upon entrance into Emergency Mode of operation, the Load Shed Control shall shed all Non-Essential loads. As generators come to the bus, Non-Essential Priority Level loads shall be added based on the number of generators online.

Load Sensitive Load Shed: After all generators have been given enough time to come to the bus, load shed shall shift to “Load Sensitive” mode. The system shall compare current generator on-line capacity (in kW) to current load requirements. If surplus capacity is greater than the calculated Load Add Setpoint, after the Load Add Time Delay the next Load Shed Priority will be added.

Distribution Control Screen

3.05 Distribution Control

Distribution controls are located on the Distribution Control Screen. The three select buttons also allows a load shed setting to be placed on each individual distribution breaker with electrical control. *Note: If after 3 seconds the breaker has not operated the controller output will no longer pulse and the Distribution Control Switch must be reset to AUTO and then placed in the position of desired operation.

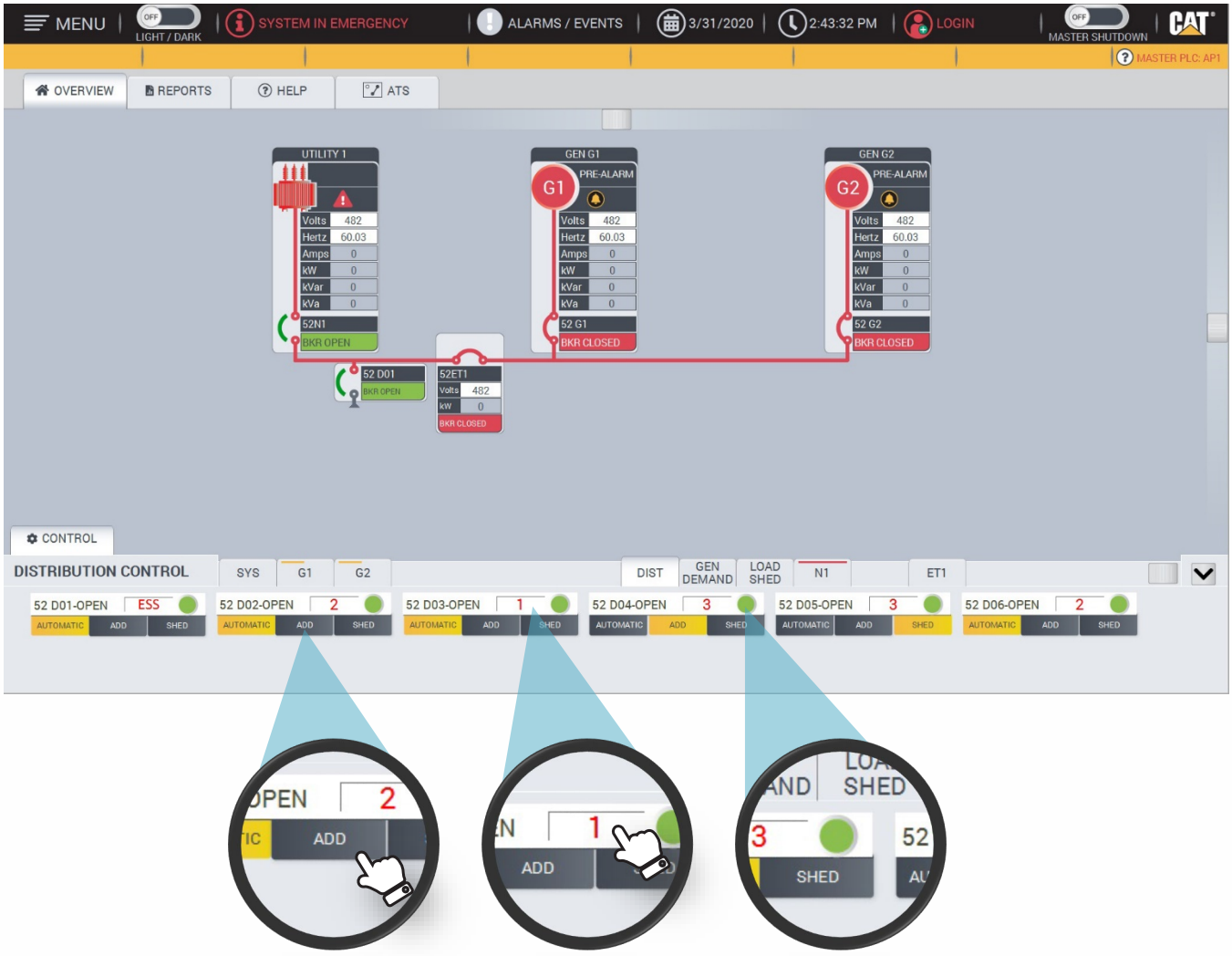

Basic operations on the Distribution Control Switch:

- Add: This position will close the distribution breaker.
- Shed: This position will open the distribution breaker.
- Auto: This position will allow for automatic operation via the load-shed/add scheme.
- Essential/ Non-Essential: Places Circuit Breaker in Essential or Non-Essential condition.

Breaker status is also shown on the distribution control switch.
Touching the Shed level button allows the operator to select the desired load shed level.

Alarms and Events Screen

3.07 Alarms and Events

The Cat Switchgear HMI provides advanced capabilities for recording and assessing historical data about critical power equipment, conditions, and events. This screen displays tracked events and alarm records that include Alarm Severity, Event Time, Message, In and Out of Alarm Time and Acknowledge Time. The alarms and events are saved in a file that can be opened in Excel or other data analysis applications.

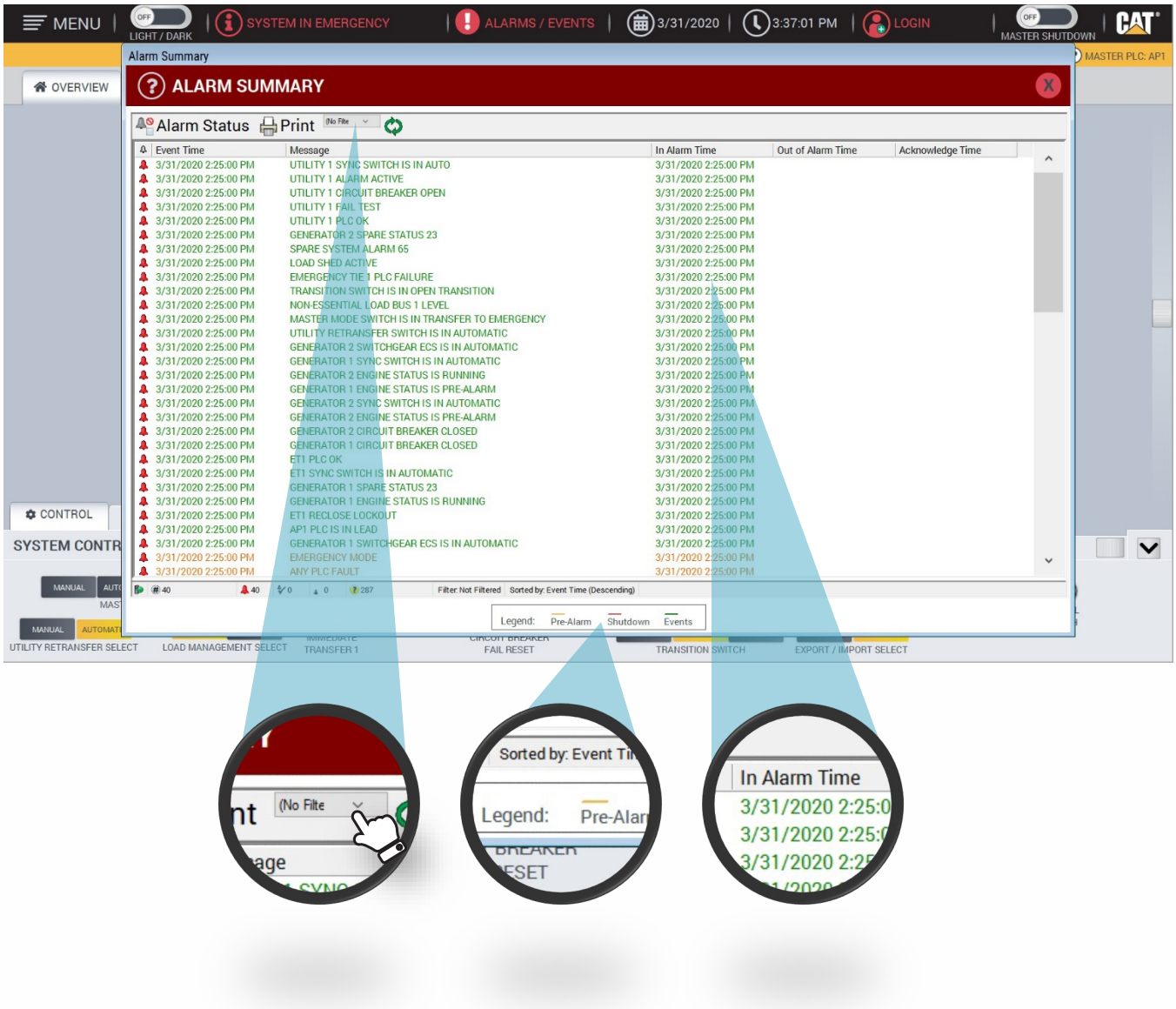

Each individual component with an annunciation system can be filtered to view only the alarm information pertaining to that component.

Built-in Security

3.08 Built-in Security

For system protection the Cat Switchgear HMI System requires your Username and Password. Every button, switch, setting, etc. is protected until the operator signs in with the proper credentials. Once the operator signs in it is logged into the Alarm / Events Summary. There's also an inactivity timeout input that is settable from the System Settings Screen. Once the inactivity timeout is activated the HMI will automatically navigate to the Screensaver Screen and automatically logout the operator. That way, access to the important commands is protected instantly. The Login icon changes color from Red to Green when the correct Username and Password is entered. If you are not logged in and touch a switch or button, a popup will appear that will inform you that you have to login in order to initiate commands.

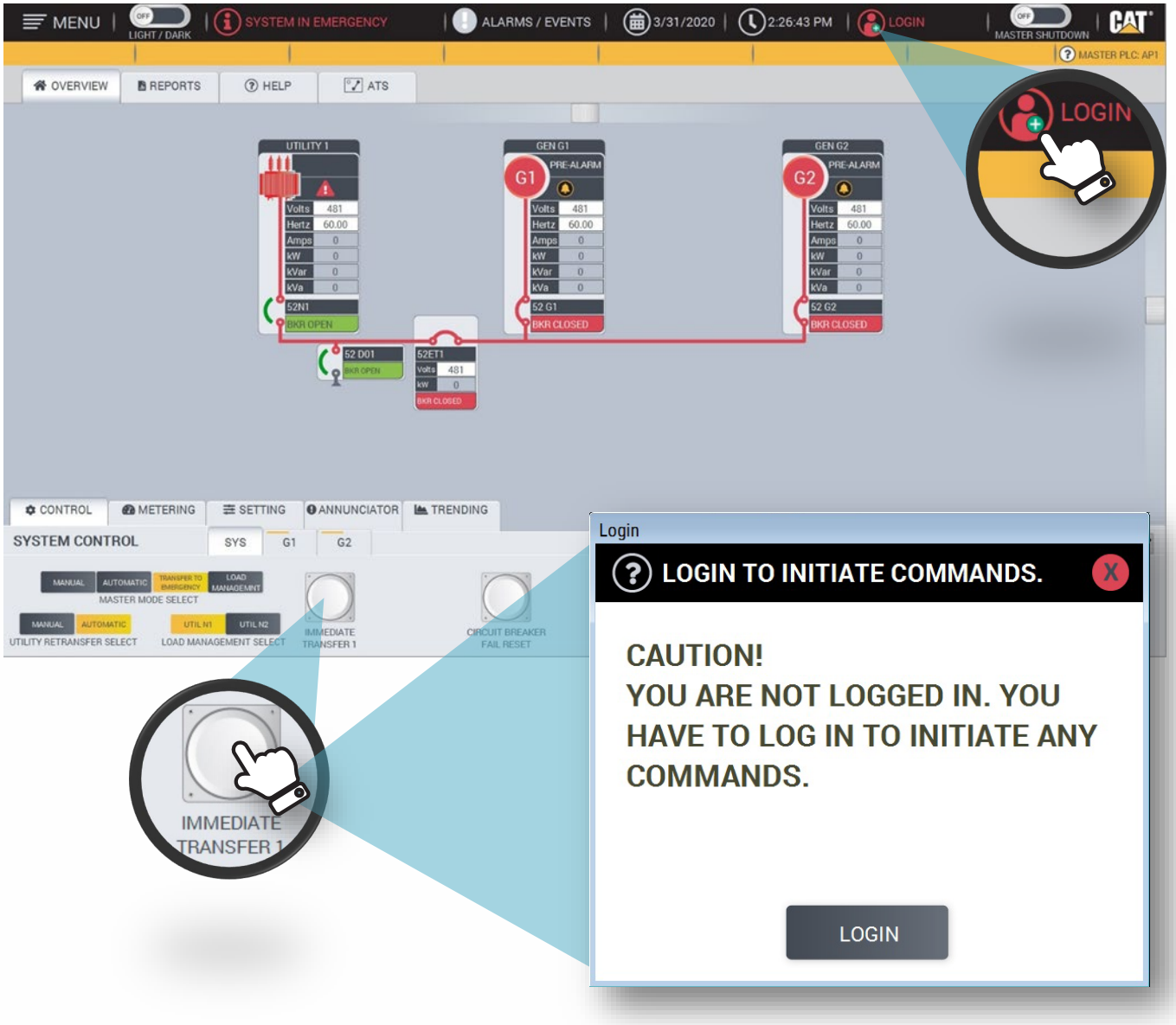

Alerts and Notifications - Optional

3.09 Alerts and Notifications - Optional

Cat Switchgear HMI provides users with real-time alerts and changes in power equipment and conditions through Alarm Screens that are viewable on all the Switchgear displays. When customer specified alarms occur, the Cat Switchgear HMI can send email alerts to desktop and mobile devices and text messages to smart phones.

We support one or two-way email notifications for different security protocols to comply with control network security standards. Push notifications let you quickly see what is wrong, send an acknowledgment, and monitor alarm condition changes in real-time, right from your smartphone. We deliver critical alarm information remotely, to the right person at the right time, maximizing system uptime, while reducing system maintenance.

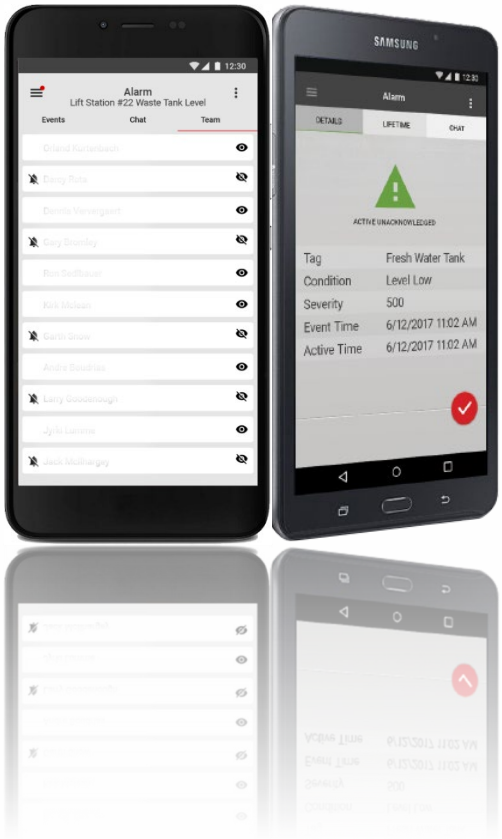

Engine Exerciser - Optional

3.10 Engine Exerciser – Optional

The Engine Exerciser screen allows the operator to schedule a day and time to run all engines on a Utility Fail Test. All engines will start, parallel to the bus, and generator circuit breakers will close. The engines will run until the specified time elapses.

To setup the schedule simply choose the desired Month first. Proceeded by selecting the desired days next. Lastly, select the desired duration time of the test. The Engine Exerciser uses Military Time.

LAN / Fiber connected Remote - Optional

3.11 LAN / Fiber connected Remote - Optional

For customers needing remote access we typically provide Local Remote Access via an Ethernet connection or Fiber connection. A Server / Client connection is established through the HMI Software and the remote computer. The remote computer should have Antivirus software loaded, by the End User, for protection. Some applications provide connections via a web browser, instead of a Server / Client connection.

To minimize data loss and down time, and to help ensure that critical parts of your system are always available to connected clients, we provide the health monitoring and redundancy features. In process monitoring and control automation, redundancy refers to the ability of the system running the process to continue working correctly, when parts of the system become unavailable or fail. In our network distributed application, we can set up redundancy on paired computers, for critical components such as HMI servers. One computer in the pair hosts the primary server, and the other hosts the secondary (or backup) server. In the event that the primary HMI server cannot provide service to application clients, the system switches to the secondary server, and the clients continue to function normally. There is no need to restart client or active server computers. Contact your Dealer for more information about these and other availability features.

Section IV. Options

4.01 Key Features and Options

Below are the key features that are offered with our GUI / HMI Systems. We are custom solutions integrators, so our scope goes beyond what's listed below. Ask your Dealer for more information.

Key Features / Options	Standard HMI	Enhanced HMI	Advanced HMI
System Features:			
Alarms and Events:			
Real Time	✓	✓	✓
Historical		✓	✓
Trending:			
Real Time	✓	✓	✓
Historical		✓	✓
Custom			✓
Reports:			
Standard	✓	✓	✓
Joint Commission		✓	✓
Custom			✓
Engine Exerciser		✓	✓
Tech-Link - Remote Support	✓	✓	✓
Network Diagram		✓	✓
Tablet Access		✓	✓
Redundant HMI		✓	✓
Built-In Security	✓	✓	✓
Alerts and Notifications		✓	✓
Control Center Navigation			✓
Light / Dark Mode			✓
Tooltips			✓
Help Files			✓
Clean Screen Mode			✓
Screen Saver Mode		✓	✓

Materials and specifications are subject to change without notice. CAT, CATERPILLAR, LET'S DO THE WORK, their respective logos, "Caterpillar Corporate Yellow", the "Power Edge" and Cat "Modern Hex" trade dress as well as corporate and product identity used herein, are trademarks of Caterpillar and may not be used without permission.

© 2020 Caterpillar. All Rights Reserved.

LEBE0090-00 (05/20)

□□□ □ □N□ □□ □□ □□RAT □□N□

Caterpillar: Confidential Green

41569 – Noland WWTP **Date: 09/02/2025**

Functional Sequence of Operations

Automatic/Standby Mode

1. The utility main breaker is closed serving utility power to its load bus.
2. The bus tie breaker is open.
3. The generator main breakers are open.
4. The automation is standing by to act in response to a utility failure.

Automatic Modes upon Loss/Restoration of Utility

Utility Failure, System Transfers to Emergency Mode

1. Utility protective relaying senses utility voltage or frequency out of tolerance at the utility source.
2. The utility main breaker is opened.
3. A run request is sent to the generator plant.
4. The first generator up to voltage and frequency is closed to the generator bus.
5. The bus tie breaker is closed.
6. The remaining generators are synchronized and paralleled to the bus as they come up to voltage and frequency.
7. The system is now in Emergency Mode.

Utility Restoration, System Transfers to Automatic/Standby Mode

1. Utility protective relaying senses utility voltage and frequency within tolerance at the utility source.
2. Following an adjustable time delay (which can be abbreviated by the operator) to assure that the utility power source is stable, the generator plant is synchronized and paralleled to the utility source by closing the utility main breaker.
3. The generator plant is soft ramp unloaded until the utility source is nominally serving its load bus.
4. The bus tie breaker is opened.
5. The generator breakers are opened.
6. The generators are allowed to run for their programmed cool down period.
7. The system is now back in Automatic/Standby Mode.

Operator Initiated Modes

Entry into Emergency Mode

1. The operator places the Master Mode Selector Switch into the Transfer to Emergency position.
2. A run request is sent to the generator plant.
3. The first generator up to voltage and frequency is closed to the generator bus.

4. The remaining generators are synchronized and paralleled to the bus as they come up to voltage and frequency.
5. The generators are allowed to run for a five-minute warm-up time (which can be abbreviated by the operator).
6. If after completion of the warm-up time, if the capacity of the generator plant exceeds the load on the load bus, then the generator plant is synchronized and paralleled to the utility source by closing the bus tie breaker. NOTE: If the capacity of the generator plant does not exceed the load on the load bus, then the generator breakers open and the generators enter cool down mode.
7. The generator plant is soft ramp loaded until the generator plant is nominally serving the load bus.
8. The utility main breaker is opened.
9. The system is now in Emergency Mode.

Exit from Emergency Mode

1. The operator removes the Master Mode Selector Switch from Transfer to Emergency position and returns it to the Auto position.
2. Following an adjustable time delay (which can be abbreviated by the operator), the generator plant is synchronized and paralleled to the utility source by closing the utility main breaker.
3. The generator plant is soft ramp unloaded until the utility source is nominally serving the load.
4. The bus tie breaker is opened.
5. The generator breakers are opened.
6. The generators are allowed to run for their programmed cool down period.
7. The system is now back in Automatic/Standby Mode.

Entry into Load Management Mode

Agreements are not currently in place with Ozarks Electric for Load Management Mode, but the following capability shall be provided for future use if agreements are in place. Local operator entry will allow one of the following modes.

1. Select one of the modes of operation:
    a. Import Limit - The user places the Import/Export toggle switch in the Import position and places the Base Load/Utility Tracking toggle switch in the Utility Tracking position. The user sets the Utility Import Set point to the desired amount of kW that they want to import through the Utility Circuit Breaker during Load Management Mode.
    b. Export Limit - The user places the Import/Export toggle switch in the Export position and places the Base Load/Utility Tracking toggle switch in the Utility Tracking position. The user sets the Utility Export Set point to the desired amount of kW that they want to export through the Utility Circuit Breaker during Load Management Mode.
    c. Base Load Import - The user places the Import/Export toggle switch in the Import position and places the Base Load/Utility Tracking toggle switch in the Base Load position. The user sets the Base Load Set point to the desired amount of kW that they want the generator plant to assume during Load Management Mode. The controls will not allow the generator plant to export kW through the Utility Circuit Breaker and will always maintain a nominal amount of Utility kW imported through the Utility Circuit Breaker.
    d. Base Load Export - The user places the Import/Export toggle switch in the Export position and places the Base Load/Utility Tracking toggle switch in the Base Load position. The

user sets the Base Load Set point to the desired amount of kW that they want the generator plant to assume during Load Management Mode. The controls will allow the generator plant to export kW through the Utility Circuit Breaker.

2. The user places the Master Mode Selector Switch in the Load Management position.
3. A run request is sent to the generator plant.
4. The first generator up to voltage and frequency is closed to the generator bus.
5. The remaining generators are synchronized and paralleled to the bus as they come up to voltage and frequency.
6. After completion of the warm-up time, the generator plant is synchronized and paralleled to the utility source by closing the emergency bus tie breaker.
7. The generator plant is soft ramp loaded until it is serving nominally the required amount of the load on the bus to meet the mode of operation selected.
8. The generator output is dynamically adjusted to maintain the set point to meet the mode of operation selected.
9. Should the utility fail at any time during Load Management operation, the utility protective relays shall cause the utility main breaker to open and be locked out, thus placing the system in Emergency Mode until the Utility is restored (as described in Emergency Mode exit).

Exit from Load Management Mode

1. The operator removes the Master Mode Selector Switch from Load Management position and returns it to the Auto position.
2. The generator plant is soft ramp unloaded until the utility source is nominally serving the entire system load.
3. The emergency bus tie breaker is opened.
4. The generator main breakers are opened.
5. The generators are allowed to run for their programmed cool down period.
6. The system is now back in Automatic/Standby Mode.

Entry into No Load Test

1. The No Load Test Switch is placed in the ON position.
2. All available generators are started.
3. The first generator up to voltage and frequency is closed to the bus.
4. The remaining generators are synchronized and paralleled to the bus as they come up to voltage and frequency.
5. The system is now in No Load Test Mode.

Exit from No Load Test

1. The No Load Test Switch is placed in the OFF position.
2. All generator breakers are opened.
3. The generators are allowed to run for their programmed cool down period.
4. The system is now back in Automatic/Standby Mode.

Entrance into Utility Fail Test Mode

1. The Utility Fail Test Switch is placed in the ON position.
2. Voltage sensing at the utility protective relay is opened, which simulates a loss of utility.

3. The system enters into a Utility Failure as described in the "Automatic Modes upon Loss/Restoration of Utility" sequence above.

Exit from Utility Fail Test Mode

1. The Utility Fail Test Switch is placed in the OFF position.
2. Voltage sensing at the utility protective relay is restored, which simulates the return of utility power.
3. The system exits from a Utility Failure as described in the "Automatic Modes upon Loss/Restoration of Utility" sequence above.

Load Shed Control

The System Controls shall include a Load Shed Control function to control the loads served by the generator plant. The Load Shed Control shall control up to two load buses with the ability to shed load independently on each bus when they are disconnected. There shall be a Load Shed Priority Level for each generator in the system plus one Non-Essential Load Shed Priority Level (which is always shed in the Emergency Mode of operation). There shall be Load Shed Priority Sub Levels within each Load Shed Priority Level to sequence load add/shed while in Load Sensitive Load Shed mode.

The Load Shed Control shall control each of the distribution circuit breakers within the switchgear. Each electrically operated distribution circuit breaker shall be field selectable to be assigned to any of the available Load Shed Priority Levels and Load Shed Priority Sub Levels.

The following controls shall be provided for each level:

a. Shed Delay Timer, adjustable from 1 to 32 seconds
b. Add Delay Timer, adjustable from 1 to 32 seconds
c. Load Shed Override Selector (auto/manual)
d. Status indicators to show whether the Priority Level or Priority Sub Level is Added or Shed

The Load Shed Controls shall have:

a. User-settable Load Shed % (as a function of on-line generator capacity)
b. User-settable Load Add % (as a function of on-line generator capacity)
c. User-settable Load Fast Shed % (as a function of on-line generator capacity)
d. User-settable Bus Under frequency Set point
e. User-settable Bus Under frequency time delay
f. Bus Under frequency Reset Pushbutton
g. Bus Under frequency indicator

Conditional Load Shed – Upon entrance into Emergency Mode of operation, the Load Shed Control shall shed all Priority loads and Non-Essential loads except essential loads. As generators come to the bus, Priority Level loads shall be added conditionally based on the number of generators on line. When the first generator comes to the bus, Priority Level 1 loads shall be added: Second generator, priority 2, etc. If there are no circuit breakers programed for a Priority Level, then that level will be skipped and the next Priority Level assigned will be added to accommodate the number of programmed levels matching the number of generators online. If a circuit breaker Priority Level is then changed to a previously skipped Priority Level, then the upper Priority Levels will be shed

accordingly. After a time delay that allows all operational generators to come to the bus, Load Shed Mode shall shift to Load Sensitive Mode if the Load Sensitive Switch is ON.

Load Sensitive Load Shed – After all generators have been given sufficient time to come to the bus, load shed shall shift to "Load Sensitive" mode. The system shall compare current generator on-line capacity (in kW) to current load requirements.

> ADD: If surplus capacity is greater than the calculated Load Add kW setpoint, after the Load Add Time Delay the next Load Shed Priority Level or Sub Level Priority will be added. This calculation will continue until all Sheddable Loads are added, or until surplus capacity is less than the calculated Load Add setpoint. If there are no available circuit breakers programmed for a Priority Level or Priority Sub Level then that level will be skipped and the next assigned Priority Level or Priority Sub Level will be added.
>
> SHED: If surplus capacity is less than the calculated Load Shed setpoint, after the Load Shed Time Delay the next Load Shed Priority or Sub Level Priority will be shed. This calculation will continue until all Sheddable Loads are shed, or until surplus capacity is greater than the calculated Load Shed setpoint. If surplus capacity is less than the calculated Load Shed setpoint, after the Load Shed Time Delay the next Load Shed Priority or Sub Level Priority will be shed. This calculation will continue until all Sheddable Loads are shed, or until surplus capacity is greater than the calculated Load Shed setpoint. If there are no available circuit breakers programmed for a Priority Level or Priority Sub Level then that level will be skipped and the next assigned Priority Level or Priority Sub Level will be shed.
>
> FAST SHED: The Fast Shed Trigger Input occurs when there is a bus underfrequency condition or if surplus capacity is less than the calculated Fast Load Shed setpoint. After the Fast Load Shed Time Delay, or the Fast Shed Trigger Input is on, the next Load Shed Priority or Sub Level Priority will be shed. This calculation will continue until all Sheddable Loads are shed, or until surplus capacity is greater than the calculated Fast Load Shed setpoint. All Priority Levels or Priority Sub Levels will be shed at the Fast Shed Delay rate.

Both Buses Load Shed Control Enabled and Tied Together – The Load Shed Control shall work the same way as described above, however, both buses available circuit breakers will be evaluated for their Priority Level or Priority Sub Level. If Load Shed Control is enabled on a single load bus and then the second load bus is enabled while the generator busses are tied, the Load Shed Control will revert to Conditional Load Shed mode and the Load Sensitive Load Shed timer will restart. If Load Shed Control is enabled on both load buses and then the generator busses are tied, the Load Shed Control will revert back to Conditional Load Shed mode and the Load Sensitive Load Shed timer will restart. When both load busses are tied together, the Load Shed Control commands for load bus 2 are duplicated from load bus 1.

If the Load Shed Control, in its automatic shedding and adding of loads, shall not override any manual circuit breaker open/close operation.

Should the load bus frequency fall below the user selected bus underfrequency setpoint for a period longer than the bus underfrequency time delay, then the bus underfrequency alarm will be triggered.

The Add Inhibit Input is triggered by a bus underfrequency alarm. All Priority Level and Priority Sub Level loads shall be shed. Load addition shall not resume until the operator has depressed the Bus Underfrequency Reset button. The bus underfrequency protection shall override any manual circuit breaker close/add operation.

Generator Demand Priority Control

The System Controls shall include a Generator Demand Priority Control function to automatically match the on-line generator capacity to the loads to avoid unnecessary operation of unneeded generators when the loads are low.
The following controls shall be provided for each generator:

- User-settable Generator Priority Selector
- Status indicator for the Generator Priority Selected
- Status indicator for generator Remove and Add levels (in kW)
- User-settable Generator Hours Offset

The Generator Demand Priority Control shall have the following controls:

- Load Sense Load Demand Control Switch (On/Off)
- Engine Hours Based Priority (On/Off)
- User-settable Add Percent (in % of bus capacity)
- User-settable Generator Add Delay (in seconds)
- User-settable Remove Percent (in % of bus capacity)
- User-settable Generator Remove Delay (in minutes)
- User-settable Fast Add Percent (in % of bus capacity)
- User-settable Fast Add Delay (in seconds)
- User-settable Enable Delay (in minutes)
- User-settable Start All Generators Under Frequency
- User-settable Start All Generators Under Frequency Delay (in seconds)
- User-settable Minimum Number of Online Generators

Upon entrance into Emergency or Load Management modes, all generators shall be started and paralleled to the bus. After the Enable Delay time has elapsed, Load Sense Load Demand will become active.

If the bus power drops below the plant capacity minus the size of the highest priority online generator, times the Remove Percent, then following a remove delay, the highest priority generator is removed from the bus. If the statement below is true, the plant enters a remove state:
Bus kW < (Plant Capacity - Gen Size) * Remove Percent.

If the bus power rises above the plant capacity times the Add Percent, the Add Delay time elapses, and the lowest priority available offline generator is added to the bus. If the statement below is true, the plant enters an Add state:
Bus kW > Plant Capacity * Add Percent

If the bus power rises above the plant capacity times the Fast Add Percent, the Fast Add Delay time elapses, and the lowest priority available offline generator is added to the bus. If the statement below is true, the plant enters a Fast Add state:
Bus kW > Plant Capacity * Fast Add Percent
If the bus frequency drops below the Start All Generators Under Frequency set point, the Start All Generators Under Frequency Delay time elapses, and all available offline generators are added to the bus and the Enable Timer is reset. If the statement below is true, the plant enters a Fast Add state:
Bus Frequency < Start All Generators Under Frequency set point

The Minimum Number of Online Generators set point will specify the number of generators to keep on the bus regardless of excess capacity.
If Engine Hour Based Priority is selected on, then each time the engines are started as a group the hours will be evaluated and the engine with the greatest number of hours will be assigned the lowest priority through the engine with the lowest number of hours set to the highest priority. Circumstances where the engine hours are equal then the priorities will be based on the engine number.
Engine Hour Based Priority example:
G1 - 500 hrs, G2 - 500 hrs, G3 - 550 hrs and G4 - 400 hrs
In this example G3 would be removed first followed by G2, etc. therefore the associated assigned priorities would be:
G4 = Priority Level 1
G1 = Priority Level 2
G2 = Priority Level 3
G3 = Priority Level 4

Breaker Failure Scenarios:

For all failures, the horn sounds and an alarm is displayed on the HMI.

Utility Failure, System Transfers to Emergency Mode

- Utility main breaker fails to open – emergency bus tie breaker does not close when generators connect to the generator bus and the load bus remains de-energized.
- Emergency bus tie breaker fails to close – the load bus remains de-energized. Upon restoration of the utility source, the adjustable time delay is bypassed and the utility main breaker closes after the quick stabilization timer expires.
- Generator breaker fails to close – Generator continues to run and system tries to close the breaker

Utility Restoration, System Transfers to Automatic/Standby Mode

- Utility main breaker fails to close – the generators will continue to feed the load bus.
- Emergency bus tie breaker fails to open – the generator plant is soft ramp loaded until the generator plant is nominally serving the load bus and then the utility main breaker is opened. The generators will continue to feed the load bus.
- Generator breaker fails to open – generator continues to run unloaded connected to the generator bus.

Operator Initiated Mode, System Transfer to Emergency Mode

- Utility main breaker fails to open – We close emergency bus tie first in closed transition, load gens, detect fail to open on utility, unload the gens, open emergency bus tie and gens enter cooldown.
- Emergency bus tie breaker fails to close – Abort the mode. Utility continues to feed load.
- Generator breaker fails to close – Generator continues to run and system tries to close the breaker

Operator Initiated Mode, System Transfer to Normal Mode

- Utility main breaker fails to close – Abort the mode. Return to Emergency. Gens continue to feed the load.
- Emergency bus tie breaker fails to open – Abort the mode. Return to emergency. Unload Utility and Gens feed the load, open utility breaker.
- Generator breaker fails to open – Utility closes, Emergency Bus Tie breaker open, utility feeds loads, and system tries to open the breaker.

ENGRAVINGS & LABELS

Caterpillar: Confidential Green

NOTES: REFERENCE SHEET G03 FOR ENGRAVING COLOR & ATTACHMENTS

VOLTAGE TRANSFORMERS VTN1

VTN1

N1–SEL–751

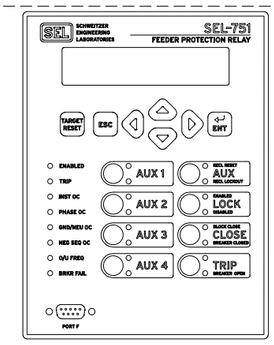

N1–SEL–751

UTILITY #1 MAIN
52N1

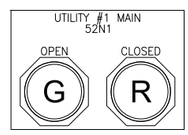

86–N1

NOTICE
DEVICE 86 LOCKOUT RELAY
REQUIRES A MANUAL RESET

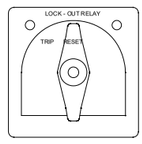

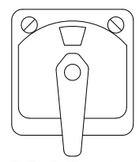

CBCS–N1

N1
TEST SWITCH 1

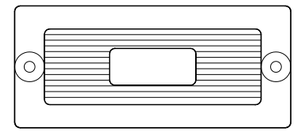

N1–TW1

CON'T ON DWG L01A

NO.	REVISION	DATE
0.0	ISSUED FOR DESIGN REVIEW	08–06–2025
0.0	ISSUED FOR SUBMITTAL	08–25–25

TITLE: NOLAND WASTE WATER TREATMENT PLANT
DOOR ENGRAVINGS/LABELS – SECT 1 A/B
12.47kV UTILITY/GENERATOR PARALLELING SWITCHGEAR

APPROVED BY: Brandon Darce	SCALE: 1:3.5	REV LEVEL: 0.0	DESIGNER: P.Simoneschi	MODIFIED BY: Rohith KJ
APPROVED DATE: 08–22–2025	L01		DATE CREATED: 08–21–2025	MODIFIED DATE: 08–25–2025
FILE NAME: 41659–L01			SHEET NUMBER: 23 OF 38	

PRODUCTION ENGINEER: Chealsea Canongo
APPLICATIONS ENGINEER: Brandon Darce

CATERPILLAR

CERTIFIED ENGINEERING ORIGINAL — CATERPILLAR SWITCHGEAR MONTOYA S. LLC — SUBMITTAL RELEASE

THIS DOCUMENT AND THE DETAILS EMBODIED THEREIN CONSTITUTE CONFIDENTIAL AND PROPRIETARY INFORMATION WHICH IS THE PROPERTY OF CATERPILLAR SWITCHGEAR AMERICA'S, LLC, 4955 MARCONI DRIVE, ALPHARETTA, GA., 30005, U.S.A., AND IS NOT TO BE USED OR REPRODUCED BY ANY PART EXCEPT AND TO THE EXTENT IN THE MANNER AUTHORIZED BY CATERPILLAR SWITCHGEAR AMERICAS, LLC

NOTES: REFERENCE SHEET G03 FOR ENGRAVING COLOR & ATTACHMENTS

CON'T ON DWG L01

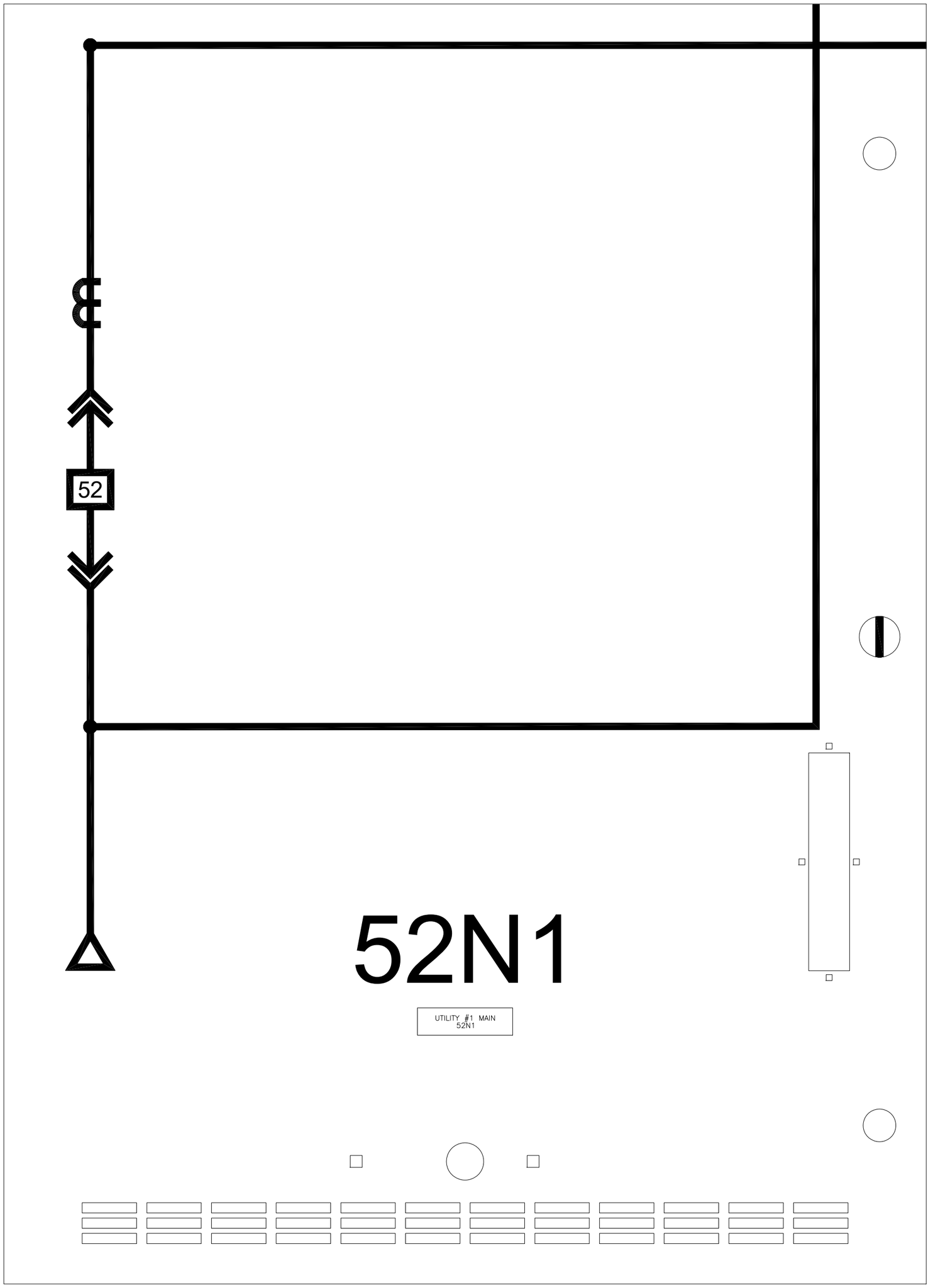

NO.	REVISION	DATE
0.0	ISSUED FOR DESIGN REVIEW	08-06-2025
0.0	ISSUED FOR SUBMITTAL	08-25-25

TITLE: NOLAND WASTE WATER TREATMENT PLANT
DOOR ENGRAVINGS/LABELS - SECT 1 C/D
12.47kV UTILITY/GENERATOR PARALLELING SWITCHGEAR

APPROVED BY: Brandon Darce	SCALE: 1:3.5	REV LEVEL: 0.0	DESIGNER: P.Simoneschi	MODIFIED BY: Rohith KJ
APPROVED DATE: 08-22-2025	L01A		DATE CREATED: 08-21-2025	MODIFIED DATE: 08-25-2025
FILE NAME: 41659-L01A			SHEET NUMBER: 24 OF 38	

PRODUCTION ENGINEER: Chealsea Canongo
APPLICATIONS ENGINEER: Brandon Darce

CATERPILLAR®

CERTIFIED ENGINEERING ORIGINAL — CATERPILLAR SWITCHGEAR MONTOYA S.A. LLC — SUBMITTAL RELEASE

THIS DOCUMENT AND THE DETAILS EMBODIED THEREIN CONSTITUTE CONFIDENTIAL AND PROPRIETARY INFORMATION WHICH IS THE PROPERTY OF CATERPILLAR SWITCHGEAR AMERICA'S, LLC, 4955 MARCONI DRIVE, ALPHARETTA, GA., 30005, U.S.A., AND IS NOT TO BE USED OR REPRODUCED BY ANY PART EXCEPT AND TO THE EXTENT IN THE MANNER AUTHORIZED BY CATERPILLAR SWITCHGEAR AMERICAS, LLC

NOTES: REFERENCE SHEET G03 FOR ENGRAVING COLOR & ATTACHMENTS

DISTRIBUTION #2
52D2(PROVISION)

52D2

D2-SEL-751

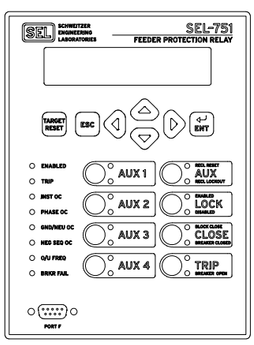

D2-SEL-751

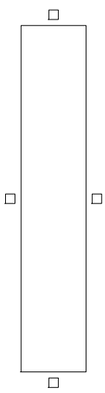

DISTRIBUTION #2
52D2(PROVISION)

OPEN CLOSED

G R

86-D2

NOTICE
DEVICE 86 LOCKOUT RELAY
REQUIRES A MANUAL RESET

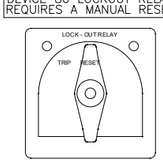

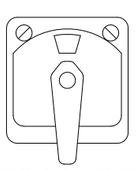

CBCS-D2

D2
TEST SWITCH 1

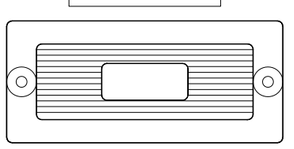

D2-TW1

CON'T ON DWG L02A

NO.	REVISION	DATE
0.0	ISSUED FOR DESIGN REVIEW	08-06-2025
0.0	ISSUED FOR SUBMITTAL	08-25-25

TITLE:
NOLAND WASTE WATER TREATMENT PLANT
DOOR ENGRAVINGS/LABELS - SECT 2 A/B
12.47kV UTILITY/GENERATOR PARALLELING SWITCHGEAR

APPROVED BY: Brandon Darce	SCALE: 1:3.5	REV LEVEL: 0.0	DESIGNER: P.Simoneschi	MODIFIED BY: Rohith KJ
APPROVED DATE: 08-22-2025	L02		DATE CREATED: 08-21-2025	MODIFIED DATE: 08-25-2025
FILE NAME: 41659-L02			SHEET NUMBER: 25 OF 38	

PRODUCTION ENGINEER: Chealsea Canongo
APPLICATIONS ENGINEER: Brandon Darce

CATERPILLAR

CERTIFIED CONCENTRIC ORIGINAL — CATERPILLAR SWITCHGEAR MEXICO S. DE R.L. — SUBMITTAL RELEASE

THIS DOCUMENT AND THE DETAILS EMBODIED THEREIN CONSTITUTE CONFIDENTIAL AND PROPRIETARY INFORMATION WHICH IS THE PROPERTY OF CATERPILLAR SWITCHGEAR AMERICA'S, LLC, 4955 MARCONI DRIVE, ALPHARETTA, GA., 30005, U.S.A., AND IS NOT TO BE USED OR REPRODUCED BY ANY PART EXCEPT AND TO THE EXTENT IN THE MANNER AUTHORIZED BY CATERPILLAR SWITCHGEAR AMERICAS, LLC

NOTES: REFERENCE SHEET G03 FOR ENGRAVING COLOR & ATTACHMENTS

CON'T ON DWG L02

86-D1

NOTICE
DEVICE 86 LOCKOUT RELAY
REQUIRES A MANUAL RESET

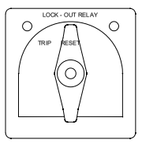

DISTRIBUTION #1
52D1

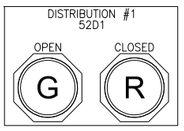

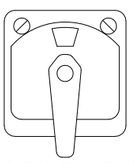

CBCS-D1

D1
TEST SWITCH 1

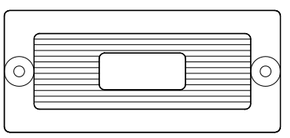

D1-TW1

D1-SEL-751

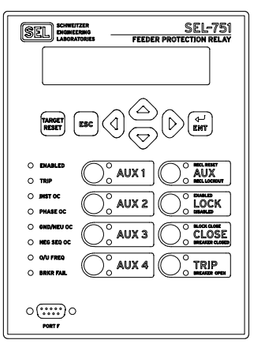

D1-SEL-751

52

52D1

DISTRIBUTION #1
52D1

NO.	REVISION	DATE
0.0	ISSUED FOR DESIGN REVIEW	08-06-2025
0.0	ISSUED FOR SUBMITTAL	08-25-25

TITLE: NOLAND WASTE WATER TREATMENT PLANT
DOOR ENGRAVINGS/LABELS - SECT 2 C/D
12.47kV UTILITY/GENERATOR PARALLELING SWITCHGEAR

PRODUCTION ENGINEER: Chealsea Canongo
APPLICATIONS ENGINEER: Brandon Darce

APPROVED BY:	SCALE:	REV LEVEL:	DESIGNER:	MODIFIED BY:
Brandon Darce	1:3.5	0.0	P.Simoneschi	Rohith KJ
APPROVED DATE: 08-22-2025	L02A		DATE CREATED: 08-21-2025	MODIFIED DATE: 08-25-2025
FILE NAME: 41659-L02A			SHEET NUMBER: 26 OF 38	

CERTIFIED CONFORMING ORIGINAL CATERPILLAR SWITCHGEAR MONROE S.C. LLC
SUBMITTAL RELEASE

THIS DOCUMENT AND THE DETAILS EMBODIED THEREIN CONSTITUTE CONFIDENTIAL AND PROPRIETARY INFORMATION WHICH IS THE PROPERTY OF CATERPILLAR SWITCHGEAR AMERICA'S, LLC, 4955 MARCONI DRIVE, ALPHARETTA, GA., 30005, U.S.A., AND IS NOT TO BE USED OR REPRODUCED BY ANY PART EXCEPT AND TO THE EXTENT IN THE MANNER AUTHORIZED BY CATERPILLAR SWITCHGEAR AMERICAS, LLC

NOTES: REFERENCE SHEET G03 FOR ENGRAVING COLOR & ATTACHMENTS

BUS TIE #1
52BT1

52BT1

BT1-SEL-751

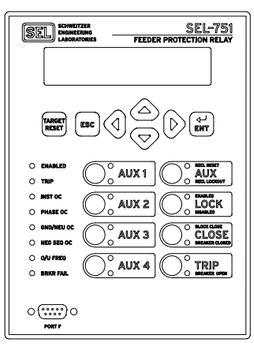

BT1-SEL-751

52

BUS TIE #1
52BT1
OPEN
CLOSED
G
R

86-BT1

NOTICE
DEVICE 86 LOCKOUT RELAY
REQUIRES A MANUAL RESET

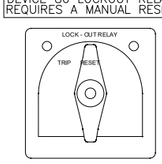

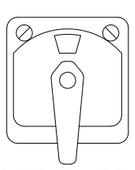

CBCS-BT1

BT1
TEST SWITCH 1

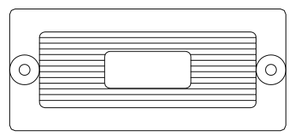

BT1-TW1

CON'T ON DWG L03A

NO.	REVISION	DATE
0.0	ISSUED FOR DESIGN REVIEW	08-06-2025
0.0	ISSUED FOR SUBMITTAL	08-25-25

TITLE: NOLAND WASTE WATER TREATMENT PLANT
DOOR ENGRAVINGS/LABELS - SECT 3 A/B
12.47kV UTILITY/GENERATOR PARALLELING SWITCHGEAR

PRODUCTION ENGINEER: Chealsea Canongo
APPLICATIONS ENGINEER: Brandon Darce

APPROVED BY:	SCALE:	REV LEVEL:	DESIGNER:	MODIFIED BY:
Brandon Darce	1:3.5	0.0	P.Simoneschi	Rohith KJ
APPROVED DATE: 08-22-2025	L03		DATE CREATED: 08-21-2025	MODIFIED DATE: 08-25-2025
FILE NAME: 41659-L03			SHEET NUMBER: 27 OF 38	

CATERPILLAR®

CERTIFIED CONTENT ORIGINAL CATERPILLAR SWITCHGEAR AMERICA'S, LLC
SUBMITTAL RELEASE

THIS DOCUMENT AND THE DETAILS EMBODIED THEREIN CONSTITUTE CONFIDENTIAL AND PROPRIETARY INFORMATION WHICH IS THE PROPERTY OF CATERPILLAR SWITCHGEAR AMERICA'S, LLC, 4955 MARCONI DRIVE, ALPHARETTA, GA., 30005, U.S.A., AND IS NOT TO BE USED OR REPRODUCED BY ANY PART EXCEPT AND TO THE EXTENT IN THE MANNER AUTHORIZED BY CATERPILLAR SWITCHGEAR AMERICA'S, LLC

NOTES: REFERENCE SHEET G03 FOR ENGRAVING COLOR & ATTACHMENTS

CON'T ON DWG L03

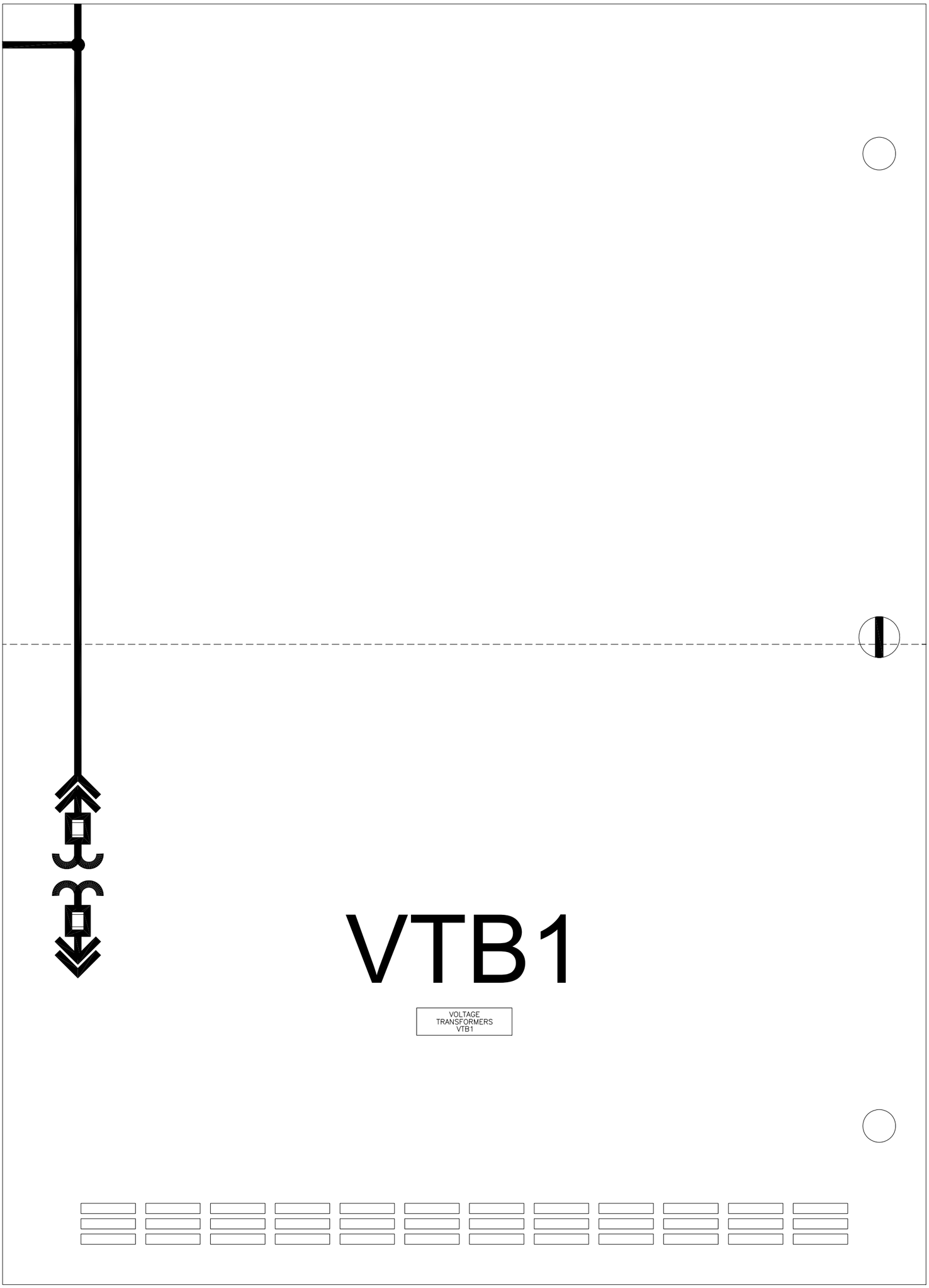

NO.	REVISION	DATE
0.0	ISSUED FOR DESIGN REVIEW	08-06-2025
0.0	ISSUED FOR SUBMITTAL	08-25-25

TITLE: NOLAND WASTE WATER TREATMENT PLANT
DOOR ENGRAVINGS/LABELS - SECT 3 C/D
12.47kV UTILITY/GENERATOR PARALLELING SWITCHGEAR

APPROVED BY:	SCALE:	REV LEVEL:	DESIGNER:	MODIFIED BY:
Brandon Darce	1:3.5	0.0	P.Simoneschi	Rohith KJ

APPROVED DATE:		DATE CREATED:	MODIFIED DATE:
08-22-2025	L03A	08-21-2025	08-25-2025

FILE NAME: 41659-L03A

SHEET NUMBER: 28 OF 38

PRODUCTION ENGINEER: Chealsea Canongo

APPLICATIONS ENGINEER: Brandon Darce

CATERPILLAR®

CERTIFIED ENGINEERING ORIGINAL CATERPILLAR SWITCHGEAR AMERICA'S, LLC
SUBMITTAL RELEASE

THIS DOCUMENT AND THE DETAILS EMBODIED THEREIN CONSTITUTE CONFIDENTIAL AND PROPRIETARY INFORMATION WHICH IS THE PROPERTY OF CATERPILLAR SWITCHGEAR AMERICA'S, LLC, 4955 MARCONI DRIVE, ALPHARETTA, GA., 30005, U.S.A., AND IS NOT TO BE USED OR REPRODUCED BY ANY PART EXCEPT AND TO THE EXTENT IN THE MANNER AUTHORIZED BY CATERPILLAR SWITCHGEAR AMERICA'S, LLC

NOTES: REFERENCE SHEET G03 FOR ENGRAVING COLOR & ATTACHMENTS

CON'T ON DWG L04A

NO.	REVISION	DATE
0.0	ISSUED FOR DESIGN REVIEW	08-06-2025
0.0	ISSUED FOR SUBMITTAL	08-25-25

TITLE: NOLAND WASTE WATER TREATMENT PLANT
DOOR ENGRAVINGS/LABELS - SECT 4 A/B
12.47kV UTILITY/GENERATOR PARALLELING SWITCHGEAR

APPROVED BY: Brandon Darce	SCALE: 1:3.5	REV LEVEL: 0.0	DESIGNER: P.Simoneschi	MODIFIED BY: Rohith KJ
APPROVED DATE: 08-22-2025	L04		DATE CREATED: 08-21-2025	MODIFIED DATE: 08-25-2025
FILE NAME: 41659-L04			SHEET NUMBER: 29 OF 38	

PRODUCTION ENGINEER: Chealsea Canongo
APPLICATIONS ENGINEER: Brandon Darce

CATERPILLAR®

CERTIFIED ENGINEERING ORIGINAL — CATERPILLAR SWITCHGEAR MONROE, LLC — SUBMITTAL RELEASE

THIS DOCUMENT AND THE DETAILS EMBODIED THEREIN CONSTITUTE CONFIDENTIAL AND PROPRIETARY INFORMATION WHICH IS THE PROPERTY OF CATERPILLAR SWITCHGEAR AMERICA'S, LLC, 4955 MARCONI DRIVE, ALPHARETTA, GA., 30005, U.S.A., AND IS NOT TO BE USED OR REPRODUCED BY ANY PART EXCEPT AND TO THE EXTENT IN THE MANNER AUTHORIZED BY CATERPILLAR SWITCHGEAR AMERICAS, LLC

NOTES: REFERENCE SHEET G03 FOR ENGRAVING COLOR & ATTACHMENTS

CON'T ON DWG L04

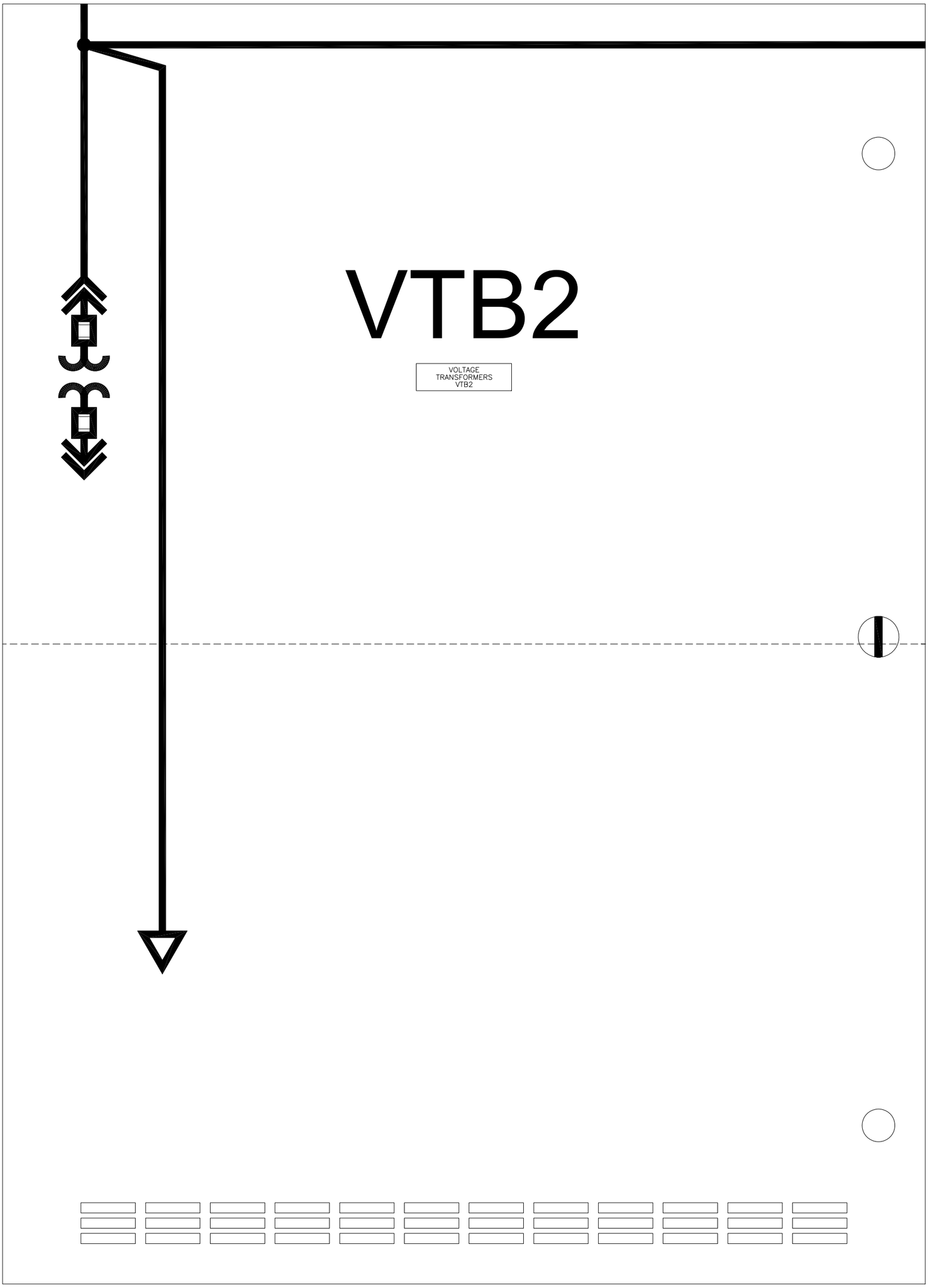

NO.	REVISION	DATE
0.0	ISSUED FOR DESIGN REVIEW	08-06-2025
0.0	ISSUED FOR SUBMITTAL	08-25-25

TITLE: NOLAND WASTE WATER TREATMENT PLANT
DOOR ENGRAVINGS/LABELS - SECT 4 C/D
12.47kV UTILITY/GENERATOR PARALLELING SWITCHGEAR

APPROVED BY: Brandon Darce	SCALE: 1:3.5	REV LEVEL: 0.0	DESIGNER: P.Simoneschi	MODIFIED BY: Rohith KJ
APPROVED DATE: 08-22-2025	L04A		DATE CREATED: 08-21-2025	MODIFIED DATE: 08-25-2025
FILE NAME: 41659-L04A			SHEET NUMBER: 30 OF 38	

PRODUCTION ENGINEER: Chealsea Canongo
APPLICATIONS ENGINEER: Brandon Darce

CATERPILLAR

CERTIFIED CONFORMING ORIGINAL CATERPILLAR SWITCHGEAR MEDINA S.S. LLC
SUBMITTAL RELEASE

THIS DOCUMENT AND THE DETAILS EMBODIED THEREIN CONSTITUTE CONFIDENTIAL AND PROPRIETARY INFORMATION WHICH IS THE PROPERTY OF CATERPILLAR SWITCHGEAR AMERICA'S, LLC, 4955 MARCONI DRIVE, ALPHARETTA, GA., 30005, U.S.A., AND IS NOT TO BE USED OR REPRODUCED BY ANY PART EXCEPT AND TO THE EXTENT IN THE MANNER AUTHORIZED BY CATERPILLAR SWITCHGEAR AMERICAS, LLC

NOTES: REFERENCE SHEET G03 FOR ENGRAVING COLOR & ATTACHMENTS

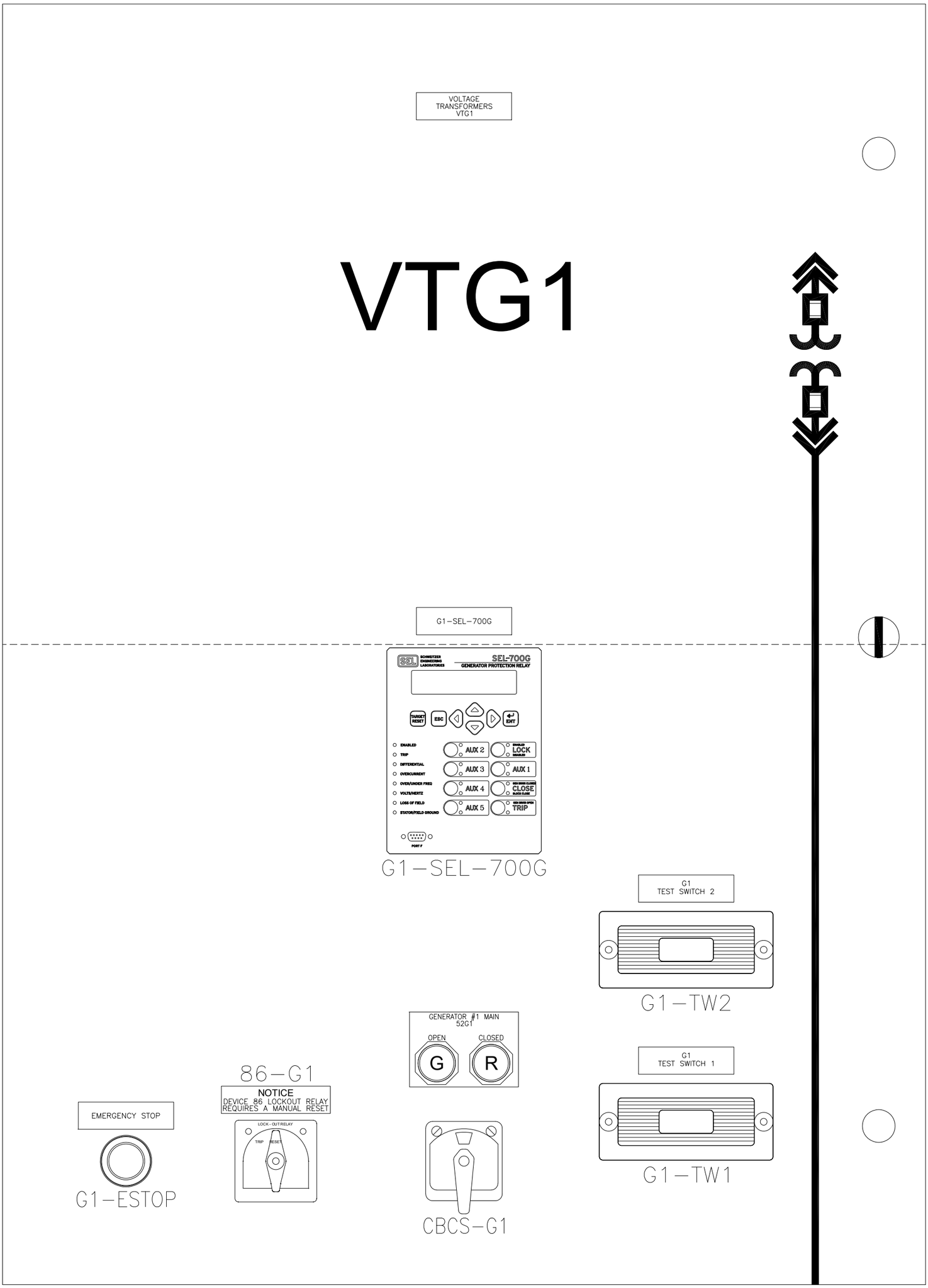

CON'T ON DWG L05A

NO.	REVISION	DATE
0.0	ISSUED FOR DESIGN REVIEW	08-06-2025
0.0	ISSUED FOR SUBMITTAL	08-25-25

TITLE: NOLAND WASTE WATER TREATMENT PLANT
DOOR ENGRAVINGS/LABELS - SECT 5 A/B
12.47kV UTILITY/GENERATOR PARALLELING SWITCHGEAR

PRODUCTION ENGINEER: Chealsea Canongo
APPLICATIONS ENGINEER: Brandon Darce

APPROVED BY:	SCALE:	REV LEVEL:	DESIGNER:	MODIFIED BY:
Brandon Darce	1:3.5	0.0	P.Simoneschi	Rohith KJ
APPROVED DATE: 08-22-2025	L05		DATE CREATED: 08-21-2025	MODIFIED DATE: 08-25-2025
FILE NAME: 41659-L05			SHEET NUMBER: 31 OF 38	

CATERPILLAR®

CERTIFIED ENGINEERING ORIGINAL CATERPILLAR SWITCHGEAR AMERICA'S, LLC SUBMITTAL RELEASE

THIS DOCUMENT AND THE DETAILS EMBODIED THEREIN CONSTITUTE CONFIDENTIAL AND PROPRIETARY INFORMATION WHICH IS THE PROPERTY OF CATERPILLAR SWITCHGEAR AMERICA'S, LLC, 4955 MARCONI DRIVE, ALPHARETTA, GA., 30005, U.S.A., AND IS NOT TO BE USED OR REPRODUCED BY ANY PART EXCEPT AND TO THE EXTENT IN THE MANNER AUTHORIZED BY CATERPILLAR SWITCHGEAR AMERICA'S, LLC

NOTES: REFERENCE SHEET G03 FOR ENGRAVING COLOR & ATTACHMENTS

CON'T ON DWG L05

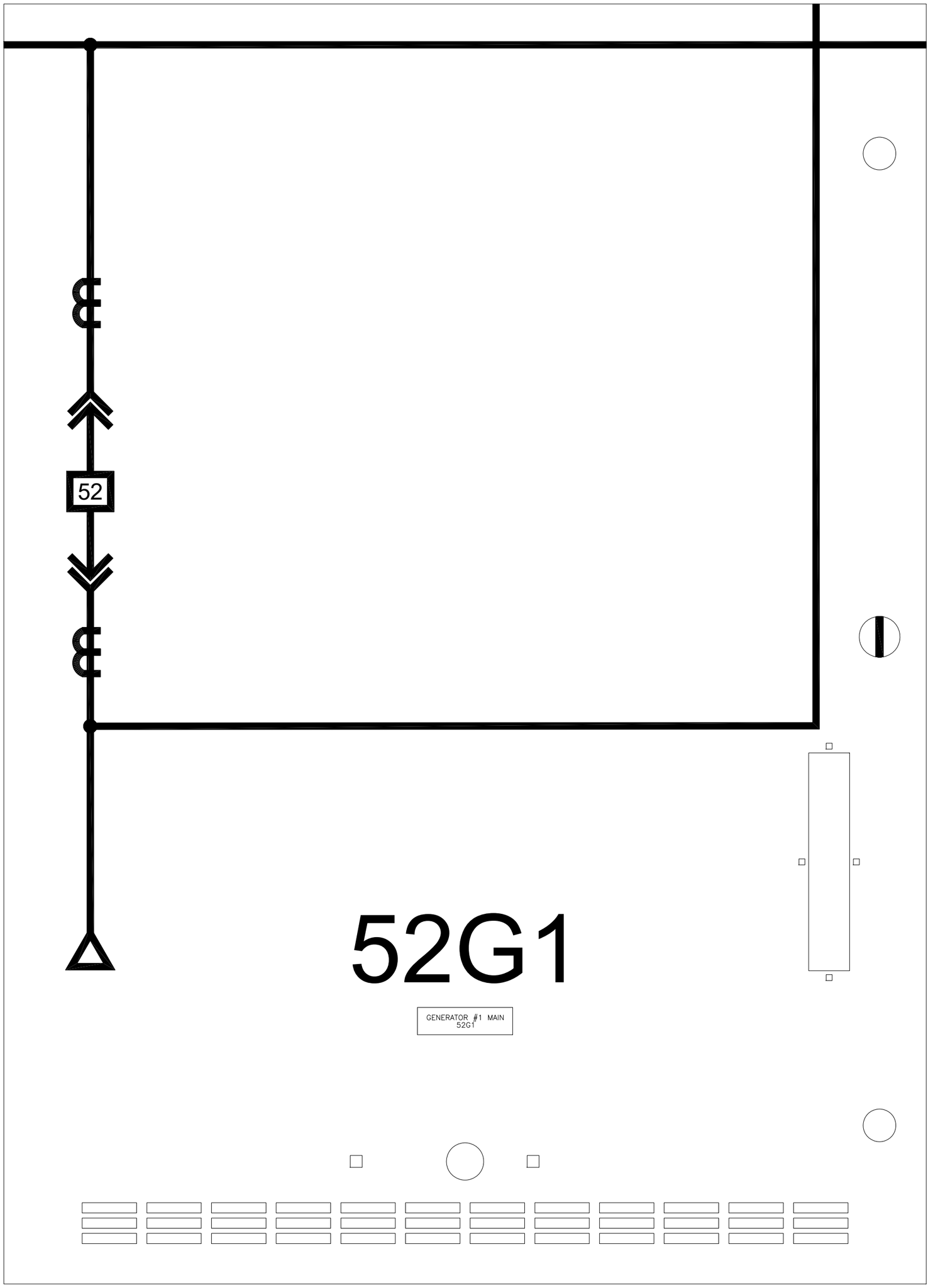

NO.	REVISION	DATE
0.0	ISSUED FOR DESIGN REVIEW	08-06-2025
0.0	ISSUED FOR SUBMITTAL	08-25-25

TITLE: NOLAND WASTE WATER TREATMENT PLANT
DOOR ENGRAVINGS/LABELS - SECT 5 C/D
12.47kV UTILITY/GENERATOR PARALLELING SWITCHGEAR

APPROVED BY:	SCALE:	REV LEVEL:	DESIGNER:	MODIFIED BY:
Brandon Darce	1:3.5	0.0	P.Simoneschi	Rohith KJ
APPROVED DATE: 08-22-2025	L05A		DATE CREATED: 08-21-2025	MODIFIED DATE: 08-25-2025
FILE NAME: 41659-L05A			SHEET NUMBER: 32 OF 38	

PRODUCTION ENGINEER: Chealsea Canongo
APPLICATIONS ENGINEER: Brandon Darce

CATERPILLAR®

CERTIFIED ENGINEERING ORIGINAL CATERPILLAR SWITCHGEAR AMERICA'S, LLC
SUBMITTAL RELEASE

THIS DOCUMENT AND THE DETAILS EMBODIED THEREIN CONSTITUTE CONFIDENTIAL AND PROPRIETARY INFORMATION WHICH IS THE PROPERTY OF CATERPILLAR SWITCHGEAR AMERICA'S, LLC, 4955 MARCONI DRIVE, ALPHARETTA, GA., 30005, U.S.A., AND IS NOT TO BE USED OR REPRODUCED BY ANY PART EXCEPT AND TO THE EXTENT IN THE MANNER AUTHORIZED BY CATERPILLAR SWITCHGEAR AMERICA'S, LLC

NOTES: REFERENCE SHEET G03 FOR ENGRAVING COLOR & ATTACHMENTS

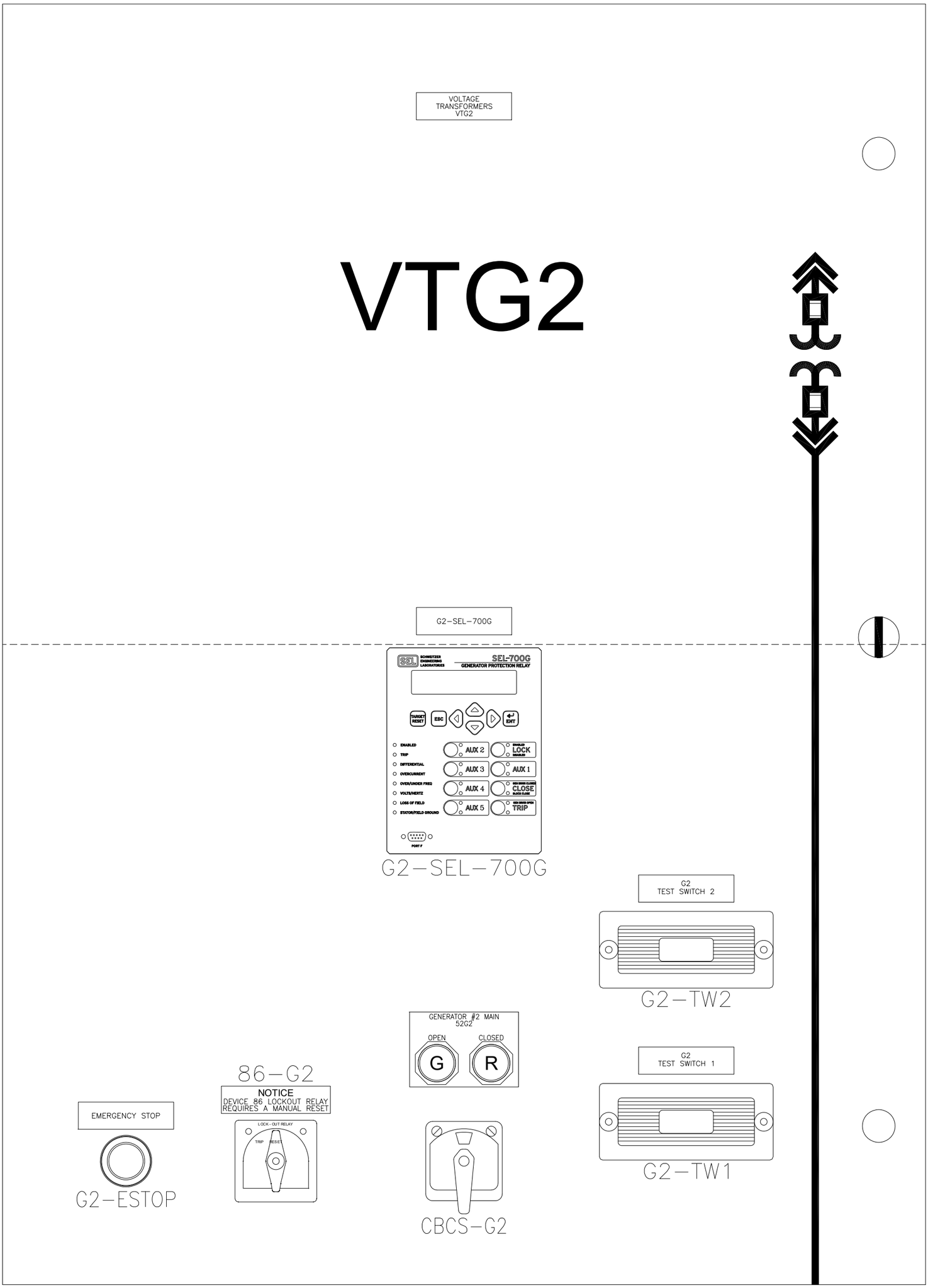

CON'T ON DWG L06A

NO.	REVISION	DATE
0.0	ISSUED FOR DESIGN REVIEW	08-06-2025
0.0	ISSUED FOR SUBMITTAL	08-25-25

TITLE: NOLAND WASTE WATER TREATMENT PLANT
DOOR ENGRAVINGS/LABELS - SECT 6 A/B
12.47kV UTILITY/GENERATOR PARALLELING SWITCHGEAR

APPROVED BY:	SCALE:	REV LEVEL:	DESIGNER:	MODIFIED BY:
Brandon Darce	1:3.5	0.0	P.Simoneschi	Rohith KJ
APPROVED DATE: 08-22-2025	L06		DATE CREATED: 08-21-2025	MODIFIED DATE: 08-25-2025
FILE NAME: 41659-L06			SHEET NUMBER: 33 OF 38	

PRODUCTION ENGINEER: Chealsea Canongo
APPLICATIONS ENGINEER: Brandon Darce

CATERPILLAR®

CERTIFIED ENGINEERING ORIGINAL CATERPILLAR SWITCHGEAR AMERICA'S, LLC SUBMITTAL RELEASE

THIS DOCUMENT AND THE DETAILS EMBODIED THEREIN CONSTITUTE CONFIDENTIAL AND PROPRIETARY INFORMATION WHICH IS THE PROPERTY OF CATERPILLAR SWITCHGEAR AMERICA'S, LLC, 4955 MARCONI DRIVE, ALPHARETTA, GA., 30005, U.S.A., AND IS NOT TO BE USED OR REPRODUCED BY ANY PART EXCEPT AND TO THE EXTENT IN THE MANNER AUTHORIZED BY CATERPILLAR SWITCHGEAR AMERICA'S, LLC

NOTES: REFERENCE SHEET G03 FOR ENGRAVING COLOR & ATTACHMENTS

CON'T ON DWG L06

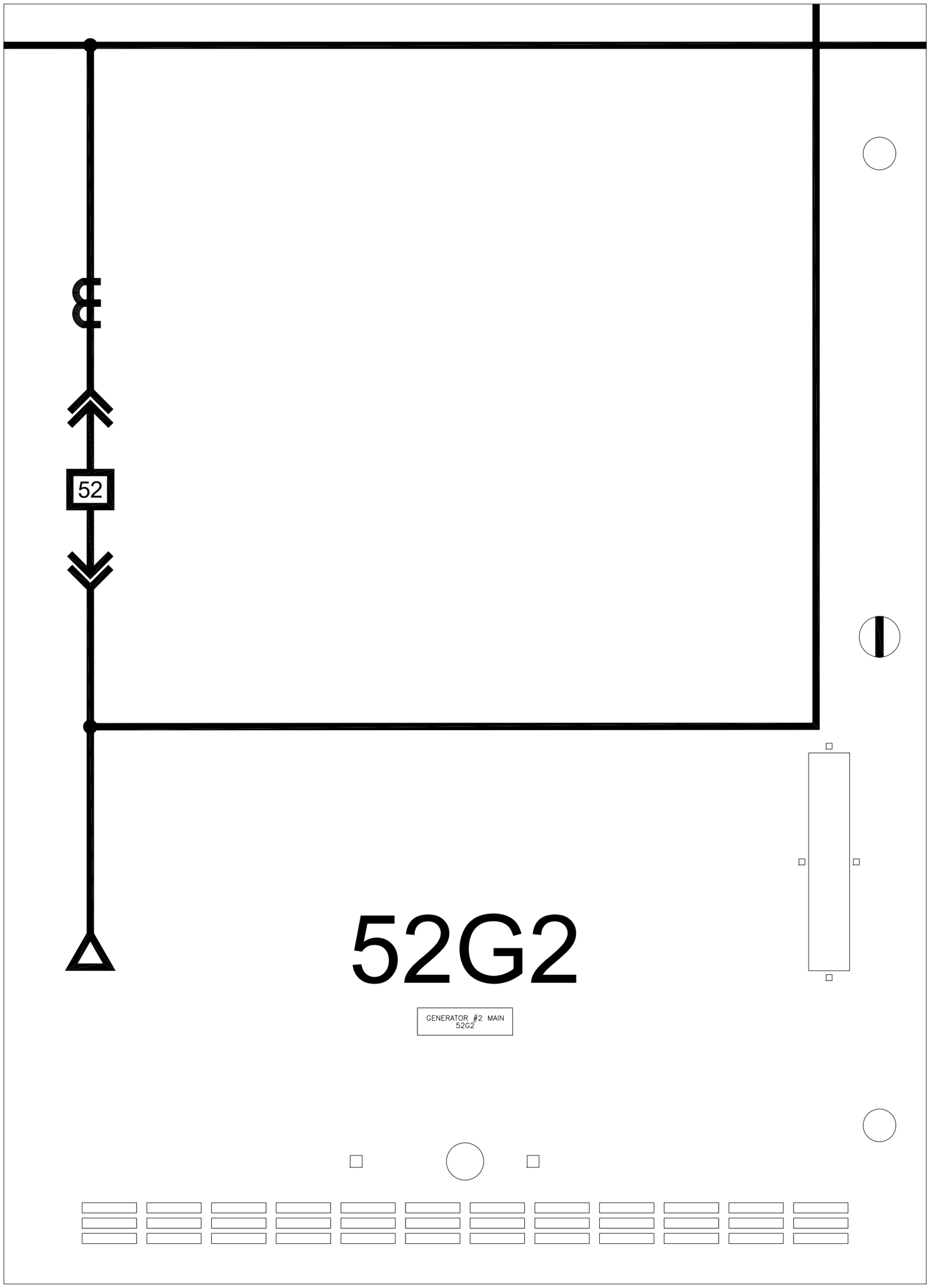

NO.	REVISION	DATE
0.0	ISSUED FOR DESIGN REVIEW	08-06-2025
0.0	ISSUED FOR SUBMITTAL	08-25-25

TITLE: NOLAND WASTE WATER TREATMENT PLANT
DOOR ENGRAVINGS/LABELS - SECT 6 C/D
12.47kV UTILITY/GENERATOR PARALLELING SWITCHGEAR

APPROVED BY:	SCALE:	REV LEVEL:	DESIGNER:	MODIFIED BY:
Brandon Darce	1:3.5	0.0	P.Simoneschi	Rohith KJ
APPROVED DATE: 08-22-2025	L06A		DATE CREATED: 08-21-2025	MODIFIED DATE: 08-25-2025
FILE NAME: 41659-L06A			SHEET NUMBER: 34 OF 38	

PRODUCTION ENGINEER: Chealsea Canongo
APPLICATIONS ENGINEER: Brandon Darce

CATERPILLAR®

CERTIFIED ENGINEERING ORIGINAL CATERPILLAR SWITCHGEAR AMERICA'S, LLC
SUBMITTAL RELEASE

THIS DOCUMENT AND THE DETAILS EMBODIED THEREIN CONSTITUTE CONFIDENTIAL AND PROPRIETARY INFORMATION WHICH IS THE PROPERTY OF CATERPILLAR SWITCHGEAR AMERICA'S, LLC, 4955 MARCONI DRIVE, ALPHARETTA, GA., 30005, U.S.A., AND IS NOT TO BE USED OR REPRODUCED BY ANY PART EXCEPT AND TO THE EXTENT IN THE MANNER AUTHORIZED BY CATERPILLAR SWITCHGEAR AMERICA'S, LLC

NOTE: REFERENCE SHEET G03A FOR ENGRAVING COLOR & ATTACHMENTS

CONTROL PANEL 1

SYSTEM CONTROLS

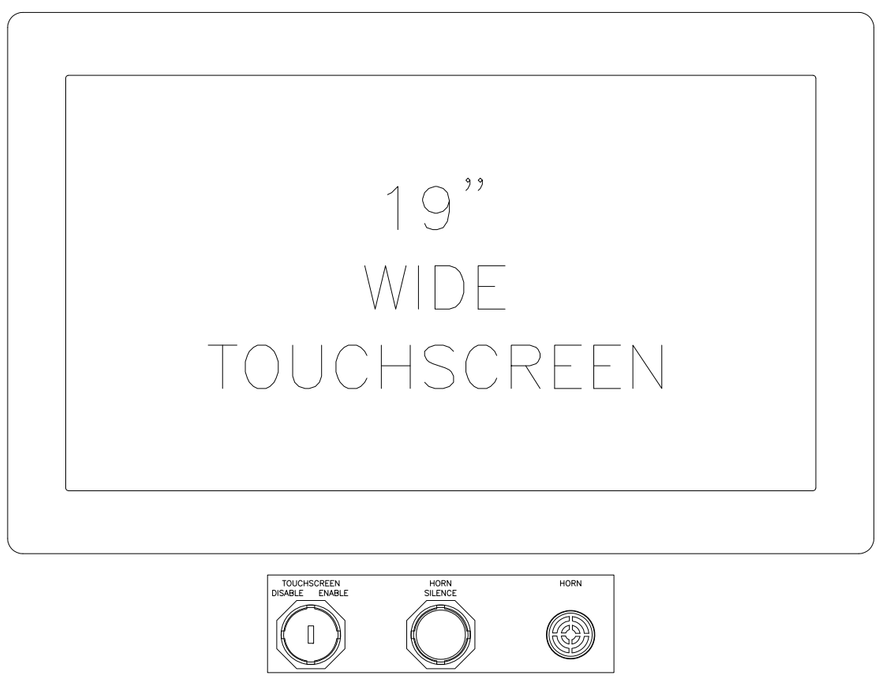

CON’T ON DWG CP–L01A

NO.	REVISION	DATE
0.0	ISSUED FOR DESIGN REVIEW	08–06–2025
0.0	ISSUED FOR SUBMITTAL	08–25–25

TITLE: NOLAND WASTE WATER TREATMENT PLANT
DOOR ENGRAVINGS/LABELS – SECT CP1
12.47kV UTILITY/GENERATOR PARALLELING SWITCHGEAR

APPROVED BY: Brandon Darce	SCALE: 1:3.5	REV LEVEL: 0.0	DESIGNER: P.Simoneschi	MODIFIED BY: Rohith KJ
APPROVED DATE: 08–22–2025	CP–L01		DATE CREATED: 08–21–2025	MODIFIED DATE: 08–25–2025
FILE NAME: 41659–CP–L01			SHEET NUMBER: 35 OF 38	

PRODUCTION ENGINEER: Chealsea Canongo
APPLICATIONS ENGINEER: Brandon Darce

CATERPILLAR

CERTIFIED ENGINEERING ORIGINAL — CATERPILLAR SWITCHGEAR MONROE, LLC — SUBMITTAL RELEASE

THIS DOCUMENT AND THE DETAILS EMBODIED THEREIN CONSTITUTE CONFIDENTIAL AND PROPRIETARY INFORMATION WHICH IS THE PROPERTY OF CATERPILLAR SWITCHGEAR AMERICA'S, LLC, 4955 MARCONI DRIVE, ALPHARETTA, GA., 30005, U.S.A., AND IS NOT TO BE USED OR REPRODUCED BY ANY PART EXCEPT AND TO THE EXTENT IN THE MANNER AUTHORIZED BY CATERPILLAR SWITCHGEAR AMERICAS, LLC

NOTE: REFERENCE SHEET G03A FOR ENGRAVING COLOR & ATTACHMENTS

CON'T ON DWG CP-L01

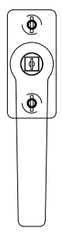

UTILITY CONTROLS

NO.	REVISION	DATE
0.0	ISSUED FOR DESIGN REVIEW	08-06-2025
0.0	ISSUED FOR SUBMITTAL	08-25-25

TITLE: NOLAND WASTE WATER TREATMENT PLANT
DOOR ENGRAVINGS/LABELS - SECT CP1
12.47kV UTILITY/GENERATOR PARALLELING SWITCHGEAR

APPROVED BY: Brandon Darce	SCALE: 1:3.5	REV LEVEL: 0.0	DESIGNER: P.Simoneschi	MODIFIED BY: Rohith KJ
APPROVED DATE: 08-22-2025	CP-L01A		DATE CREATED: 08-21-2025	MODIFIED DATE: 08-25-2025
FILE NAME: 41659-CP-L01A			SHEET NUMBER: 36 OF 38	

PRODUCTION ENGINEER: Chealsea Canongo
APPLICATIONS ENGINEER: Brandon Darce

CATERPILLAR

CERTIFIED ENGINEERING ORIGINAL — CATERPILLAR SWITCHGEAR MEXICO S. DE R.L. DE C.V. — SUBMITTAL RELEASE

THIS DOCUMENT AND THE DETAILS EMBODIED THEREIN CONSTITUTE CONFIDENTIAL AND PROPRIETARY INFORMATION WHICH IS THE PROPERTY OF CATERPILLAR SWITCHGEAR AMERICA'S, LLC, 4955 MARCONI DRIVE, ALPHARETTA, GA., 30005, U.S.A., AND IS NOT TO BE USED OR REPRODUCED BY ANY PART EXCEPT AND TO THE EXTENT IN THE MANNER AUTHORIZED BY CATERPILLAR SWITCHGEAR AMERICAS, LLC

NOTE: REFERENCE SHEET G03A FOR ENGRAVING COLOR & ATTACHMENTS

CONTROL PANEL 2

GEN 1 & 2 CONTROLS

CON'T ON DWG CP-L02A

NO.	REVISION	DATE
0.0	ISSUED FOR DESIGN REVIEW	08-06-2025
0.0	ISSUED FOR SUBMITTAL	08-25-25

TITLE: NOLAND WASTE WATER TREATMENT PLANT
DOOR ENGRAVINGS/LABELS - SECT CP2
12.47kV UTILITY/GENERATOR PARALLELING SWITCHGEAR

APPROVED BY:	SCALE:	REV LEVEL:	DESIGNER:	MODIFIED BY:
Brandon Darce	1:3.5	0.0	P.Simoneschi	Rohith KJ
APPROVED DATE: 08-22-2025	CP-L02		DATE CREATED: 08-21-2025	MODIFIED DATE: 08-25-2025
FILE NAME: 41659-CP-L02			SHEET NUMBER: 37 OF 38	

PRODUCTION ENGINEER: Chealsea Canongo
APPLICATIONS ENGINEER: Brandon Darce

CATERPILLAR®

CERTIFIED ENGINEERING ORIGINAL CATERPILLAR SWITCHGEAR AMERICA'S, LLC
SUBMITTAL RELEASE

THIS DOCUMENT AND THE DETAILS EMBODIED THEREIN CONSTITUTE CONFIDENTIAL AND PROPRIETARY INFORMATION WHICH IS THE PROPERTY OF CATERPILLAR SWITCHGEAR AMERICA'S, LLC, 4955 MARCONI DRIVE, ALPHARETTA, GA., 30005, U.S.A., AND IS NOT TO BE USED OR REPRODUCED BY ANY PART EXCEPT AND TO THE EXTENT IN THE MANNER AUTHORIZED BY CATERPILLAR SWITCHGEAR AMERICA'S, LLC

NOTE: REFERENCE SHEET G03A FOR ENGRAVING COLOR & ATTACHMENTS

CON'T ON DWG CP-L02

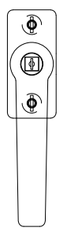

TIE CONTROLS

DIST CONTROLS

NO.	REVISION	DATE
0.0	ISSUED FOR DESIGN REVIEW	08-06-2025
0.0	ISSUED FOR SUBMITTAL	08-25-25

TITLE: NOLAND WASTE WATER TREATMENT PLANT
DOOR ENGRAVINGS/LABELS - SECT CP2
12.47kV UTILITY/GENERATOR PARALLELING SWITCHGEAR

APPROVED BY:	SCALE:	REV LEVEL:	DESIGNER:	MODIFIED BY:
Brandon Darce	1:3.5	0.0	P.Simoneschi	Rohith KJ
APPROVED DATE: 08-22-2025	CP-L02A		DATE CREATED: 08-21-2025	MODIFIED DATE: 08-25-2025
FILE NAME: 41659-CP-L02A			SHEET NUMBER: 38 OF 38	

PRODUCTION ENGINEER: Chealsea Canongo
APPLICATIONS ENGINEER: Brandon Darce

CATERPILLAR®

CERTIFIED ENGINEERING ORIGINAL CATERPILLAR SWITCHGEAR AMERICA'S, LLC
SUBMITTAL RELEASE

THIS DOCUMENT AND THE DETAILS EMBODIED THEREIN CONSTITUTE CONFIDENTIAL AND PROPRIETARY INFORMATION WHICH IS THE PROPERTY OF CATERPILLAR SWITCHGEAR AMERICA'S, LLC, 4955 MARCONI DRIVE, ALPHARETTA, GA., 30005, U.S.A., AND IS NOT TO BE USED OR REPRODUCED BY ANY PART EXCEPT AND TO THE EXTENT IN THE MANNER AUTHORIZED BY CATERPILLAR SWITCHGEAR AMERICA'S, LLC

ENGINEERING DRAWINGS

Caterpillar: Confidential Green

INFORMATION DRAWING SET

NOLAND WASTE WATER TREATMENT PLANT

FAYETTEVILLE, ARKANSAS

12.47kV UTILITY / GENERATOR PARALLELING SWITCHGEAR

RIGGS CAT
CAT-SWGR PROJECT No. 41659

SUBMITTAL RELEASE
CERTIFIED ENGINEERING DRAWING
CATERPILLAR SWITCHGEAR AMERICAS, LLC

CATERPILLAR®

PRODUCTION ENGINEER: Chealsea Canongo
APPLICATIONS ENGINEER: Brandon Darce

NO.	REVISION	DATE
0.0	ISSUED FOR DESIGN REVIEW	08-06-2025
0.0	ISSUED FOR SUBMITTAL	08-25-25

TITLE: NOLAND WASTE WATER TREATMENT PLANT
TITLE SHEET - INFORMATION SET
12.47kV UTILITY/GENERATOR PARALLELING SWITCHGEAR

APPROVED BY: Brandon Darce
APPROVED DATE: 08-22-2025
FILE NAME: 41659-TS1-G

SCALE: N.T.S.
REV LEVEL: 0.0
DESIGNER: B.ASCHWANDEN
DATE CREATED: 08-21-2025
MODIFIED BY: Rohith KJ
MODIFIED DATE: 08-25-2025
SHEET NUMBER: 1 OF 38
TS1-G

THIS DOCUMENT AND THE DETAILS EMBODIED THEREIN CONSTITUTE CONFIDENTIAL AND PROPRIETARY INFORMATION WHICH IS THE PROPERTY OF CATERPILLAR SWITCHGEAR AMERICAS, LLC, 4855 MARCONI DRIVE, ALPHARETTA, GA, 30009, U.S.A., AND IS NOT TO BE USED OR REPRODUCED BY ANY PART EXCEPT AND TO THE EXTENT IN THE MANNER AUTHORIZED BY CATERPILLAR SWITCHGEAR AMERICAS, LLC

TABLE OF CONTENTS

GENERAL DRAWINGS

DWG	DWGDESC
TS1-G	TITLE SHEET – INFORMATION SET
TS2-G	TABLE OF CONTENTS
G01	ABBREVIATION LEGEND
G02	SYMBOLS LEGEND
G03	GENERAL NOTES-SWITCHGEAR
G03A	GENERAL NOTES-CONTROL PANELS
G04	CIRCUIT BREAKER SCHEDULE
G05	FRONT ELEVATION & ONE-LINE-SWITCHGEAR
G05A	FRONT ELEVATION-CONTROL PANELS
G06	CONDUIT ENTRY AND BATTERY RACK-SWITCHGEAR
G06A	CONDUIT ENTRY-CONTROL PANELS
G06B	AC CONTROL UNIT DETAILS
G07	FLOOR PLAN-SWITCHGEAR
G08	ANCHOR PLAN-SWITCHGEAR
G08A	ANCHOR PLAN-CONTROL PANELS
G09	SIDE VIEWS-SWITCHGEAR
G09A	SIDE VIEWS-SWITCHGEAR
G10	CIRCUIT BREAKER CONTROL ONE-LINE
G11	AUTOMATION COMMUNICATIONS PLAN-SWITCHGEAR
G11A	AUTOMATION COMMUNICATIONS PLAN-CONTROL PANEL
G12	CONTROL CONDUIT SCHEDULE
G13	SEQUENCE OF OPERATIONS

LABEL DRAWINGS

DWG	DWGDESC
L01	DOOR ENGRAVINGS/LABELS – SECT 1 A/B
L01A	DOOR ENGRAVINGS/LABELS – SECT 1 C/D
L02	DOOR ENGRAVINGS/LABELS – SECT 2 A/B
L02A	DOOR ENGRAVINGS/LABELS – SECT 2 C/D
L03	DOOR ENGRAVINGS/LABELS – SECT 3 A/B
L03A	DOOR ENGRAVINGS/LABELS – SECT 3 C/D
L04	DOOR ENGRAVINGS/LABELS – SECT 4 A/B
L04A	DOOR ENGRAVINGS/LABELS – SECT 4 C/D
L05	DOOR ENGRAVINGS/LABELS – SECT 5 A/B
L05A	DOOR ENGRAVINGS/LABELS – SECT 5 C/D
L06	DOOR ENGRAVINGS/LABELS – SECT 6 A/B
L06A	DOOR ENGRAVINGS/LABELS – SECT 6 C/D
CP-L01	DOOR ENGRAVINGS/LABELS – SECT CP1
CP-L01A	DOOR ENGRAVINGS/LABELS – SECT CP1
CP-L02	DOOR ENGRAVINGS/LABELS – SECT CP2
CP-L02A	DOOR ENGRAVINGS/LABELS – SECT CP2

SUBMITTAL RELEASE

CATERPILLAR SWITCHGEAR AMERICA'S, LLC CERTIFIED ENGINEERING OFFICIAL

CATERPILLAR®

PRODUCTION ENGINEER: Chealsea Canongo
APPLICATIONS ENGINEER: Brandon Darce

TITLE: NOLAND WASTE WATER TREATMENT PLANT
TABLE OF CONTENTS
12.47kV UTILITY/GENERATOR PARALLELING SWITCHGEAR

NO.	REVISION	DATE
0.0	ISSUED FOR DESIGN REVIEW	08-06-2025
0.0	ISSUED FOR SUBMITTAL	08-25-25

DESIGNER: B.ASCHWANDEN
DATE CREATED: 08-21-2025
MODIFIED BY: Rohith KJ
MODIFIED DATE: 08-25-2025
SHEET NUMBER: 2 OF 38
REV LEVEL: 0.0
SCALE: N.T.S.
APPROVED BY: Brandon Darce
APPROVED DATE: 08-22-2025
FILE NAME: 41659-TS2-G

TS2-G

THIS DOCUMENT AND THE DETAILS EMBODIED THEREIN CONSTITUTE CONFIDENTIAL AND PROPRIETARY INFORMATION WHICH IS THE PROPERTY OF CATERPILLAR SWITCHGEAR AMERICAS, LLC. 4955 MARCONI DRIVE, ALPHARETTA, GA, 30009, U.S.A., AND IS NOT TO BE USED OR REPRODUCED BY ANY PART EXCEPT AND TO THE EXTENT IN THE MANNER AUTHORIZED BY CATERPILLAR SWITCHGEAR AMERICAS, LLC

ABBREVIATION LEGEND

ABBREVIATION	DESCRIPTION
2	TIME DELAY STARTING OR CLOSING
15/25	SYNCHRONIZER with SYNC CHECK
25/25D	SYNC CHECK RELAY/DEAD BUS ONLY
27/59	UNDER/OVER VOLTAGE RELAY
32	REVERSE POWER RELAY
32/62	REVERSE POWER RELAY WITH TIMER
40	LOSS OF EXCITATION RELAY
40/62	LOSS OF EXCITATION RELAY WITH TIMER
46	NEGATIVE SEQUENCE OVERCURRENT RELAY
47	UNDERVOLTAGE PHASE SEQUENCE RELAY
50	INSTANTANEOUS OVERCURRENT RELAY
50/51	INSTANTANEOUS TIME OVERCURRENT
51	TIME OVERCURRENT RELAY
52	CIRCUIT BREAKER
59	OVERVOLTAGE RELAY
62	TIME DELAY RELAY
65	GOVERNOR
67	DIRECTIONAL OVERCURRENT
79	RECONNECT TIME DELAY
81O/U	OVER/UNDER FREQUENCY RELAY
86	LOCKOUT RELAY
87	DIFFERENTIAL RELAY
90	REGULATING DEVICE
ØA	A-PHASE
ØB	B-PHASE
ØC	C-PHASE
a	AUX BREAKER CONTACT (NORMALLY OPEN)
b	AUX BREAKER CONTACT (NORMALLY CLOSED)
ba	NORMALLY OPEN BELL ALARM
c	a AND b WITH COMMON
3P	3 POLE
3w	3 WIRE SYSTEM
4w	4 WIRE SYSTEM
A	AMPERE
AC	ALTERNATING CURRENT
AF	AMPERAGE FRAME RATING
AI	ANALOG INPUT
AL	ALUMINUM
AM	AMPERE METER
ANN	ANNUNCIATOR
AO	ANALOG OUTPUT
AP	AUTOMATION PROCESSOR
AS	AMMETER SELECTOR
AT	AMPERAGE TRIP RATING
ATS	AUTOMATIC TRANSFER SWITCH
ATSR	ATS RUN REQUEST
AUX	AUXILIARY
AVR	AUTOMATIC VOLTAGE REGULATOR
AWG	AMERICAN WIRE GAUGE
BATT	BATTERY
BFM	BUS FREQUENCY METER
BMS	BUILDING MANAGEMENT SYSTEM
BVM	BUS VOLTAGE METER
C.O.G.	CENTER OF GRAVITY
CB	CIRCUIT BREAKER
CBCL	CIRCUIT BREAKER CLOSE
CBCS	CIRCUIT BREAKER CONTROL SWITCH
CBOP	CIRCUIT BREAKER OPEN
CCM	CATERPILLAR COMMUNICATIONS MODULE
CCW	COUNTER CLOCKWISE
CH	CHANNEL
CI	CUSTOMER INTERFACE
CL	CLOSED
CLO	CLOSE LOCKOUT
COMMS	COMMUNICATIONS
CP	CONTROL POWER
CPT	CONTROL POWER TRANSFORMER
CR	CONTROL RELAY
CS	CELL SWITCH
CT	CURRENT TRANSFORMER
CTD	CAPACITOR TRIP DEVICE
CTL	CONTROL
CTS	CURRENT TEST SWITCH
CTSB	CT SHORTING BLOCK
Cu	COPPER
CW	CLOCKWISE
D.O.	DRAWOUT
DC	DIRECT CURRENT
df/dt	RATE OF CHANGE OF FREQUENCY

ABBREVIATION	DESCRIPTION
DI	DIGITAL INPUT
DIO	DIODE
DIST	DISTRIBUTION BLOCK
DO	DIGITAL OUTPUT
DPF	DIESEL PARTICULATE FILTER
DRP	DROOP
DTI	DATA TABLE INTERFACE
E.I.	ELECTRICAL INTERLOCK
E.O.	ELECTRICALLY OPERATED
EC	ENGINE CONTROL
ECP	ENGINE CRANKING PANEL
ECS	ENGINE CONTROL SWITCH
EI	ENGINE INTERFACE
ENG	ENGINE
EPB	EMERGENCY PANELBOARD
ERR	EMERGENCY RUN REQUEST
ESW	ETHERNET SWITCH
F.M.	FIXED MOUNTED
FBO	FURNISHED BY OTHERS
FBP	FRONT BASE PLATE
FLA	FULL LOAD AMPS
FLD	FIELD
FLT	FAULT
FM	FREQUENCY METER
FO	FIBER OPTIC
FOR	FIBER OPTIC REPEATER
FU	FUSE
GB	GENERATOR BYPASS
G-EMCP	GENERATOR CONTROLLER
GEN	GENERATOR
GF	GROUND FAULT
GND	GROUND
GPS	GENERATOR PARALLELING SWITCHBOARD
H.A.	HIGH ACCURACY CT'S
HBR	HOT BUS RELAY
HRN	HORN
Hz	FREQUENCY (HERTZ)
I	INSTANTANEOUS TRIP
I/O	I/O PLC
IA	ISOLATOR AMPLIFIER
IFM	INCOMING FREQUENCY METER
IVM	INCOMING VOLTAGE METER
k	1000 (KILO)
KSW	KEY SELECTOR SWITCH
kW	KILOWATT
kWh	KILOWATT HOUR
L	LONG TIME TRIP
LFL	LOW FUEL LEVEL
LI	LONG AND INSTANTANEOUS TRIP
LOP	LOW OIL PRESSURE
LOR	LOCKOUT RELAY
LS	LOAD SHED RELAY
LIG	LI WITH GROUND FAULT TRIP
LSI	LONG, SHORT AND INSTANTANEOUS TRIP
LSIA	LSI WITH GROUND FAULT ALARM
LSIG	LSI WITH GROUND FAULT TRIP
LSM	LOAD SHARING MODULE
LT	LIGHT (for colors)
LWL	LOW WATER LEVEL
M	MOTOR
M.I.	MECHANICAL INTERLOCK
M.O.	MANUALLY OPERATED
MAG	MAGNETIC
MALF	MALFUNCTION
MCCB	MOLDED CASE CIRCUIT BREAKER
MCM	1000 CIRCULAR MILS
MFR	MULTI FUNCTION RELAY
MISC	MISCELLANEOUS
MOC	MECHANISM OPERATED CELL SWITCH
MR	MULTI RATIO
MTR	METER (DEVICE)
MUF	MULTIPLE UTILITY FAILURE
MW	MEGAWATT
N	NEUTRAL
N.C.	NORMALLY CLOSED
mA	MILLIAMPERE
mV	MILLIVOLT
N.O.	NORMALLY OPEN

ABBREVIATION	DESCRIPTION
N/A	NOT APPLICABLE
N/R	NOT REQUIRED
N6	#2-600MCM MECHANICAL LUG
NES	NON-ESSENTIAL LOAD SHED RELAY
NEU	NEUTRAL
NGR	NEUTRAL GROUND RESISTOR
NIA	NOT IN AUTOMATIC
OC	OVER CRANK
OIP	OPERATOR INTERFACE PANEL
OP	OPEN
OP CTR	OPERATION COUNTER
OS	OVER SPEED
PB	PUSHBUTTON
PC	PERSONAL COMPUTER
PF	POWER FACTOR
PHET	PRE HIGH ENGINE TEMP
PL	BREAKER POSITION LIGHT
PLC	PROGRAMMABLE LOGIC CONTROLLER
PLOB	PRE LOW OIL PRESSURE
POD	UPS CONTROL SWITCHBOARDS
POS	POSITION
POT	POTENTIOMETER
PPX	POWERPLEX TRANSDUCER
PRG	PROGRAMMING PORT
PW	POWER SUPPLY
PT	POTENTIAL TRANSFORMER
REC	RECEPTACLE
REF	REFERENCE
RP	RATING PLUG
RTD	RESISTANCE TEMPERATURE DETECTOR
S	SHORT TIME TRIP
S.C.	SURGE CAPACITOR
SA	SURGE ARRESTOR
SAR	SAFETIES ARMING RELAY
SB	STATION BATTERY
SC	SHUNT COIL
SCADA	SUPERVISORY CONTROL AND DATA ACQUISITION
SCT	SUMMING CURRENT TRANSFORMER
SECT	SECTION
SEL	SCHWEITZER DEVICE
SFM	SOURCE FREQUENCY METER
SHLD	SHIELD/SHIELDED
SMP	SYNCH MODE PERMISSIVE
SMR	SYNCH MODE RUN
SMS	SYNCHRONIZING MODE SELECTOR
SPD	SURGE PROTECTION DEVICE
SR	SPRING RELEASE
SP	SHIPPING SPLIT
SUF	SINGLE UTILITY FAILURE
SS	SELECTOR SWITCH
T1	#6-350MCM MECHANICAL LUG
TB	TERMINAL BLOCK
TBD	TO BE DETERMINED
TC	TRIP COIL
TIO	TERMINAL I/O MODULE
TM	THERMAL MAGNETIC
TMR	TIMING RELAY
TOC	TRUCK OPERATED CELL SWITCH
TS	TOUCHSCREEN
TSP	TOUCHSCREEN PROCESSOR
TW	TEST SWITCH
TVSS	TRANSIENT VOLTAGE SURGE SUPPRESSOR
TWL	TEST WITH LOAD
UFT	UTILITY FAIL TEST
UPS	UNINTERRUPTABLE POWER SUPPLY
UVR	UNDERVOLTAGE RELEASE
UVTD	UNDERVOLTAGE TIME DELAY
VA	VOLT AMPERES
VAR	VOLT AMPERES REACTIVE
VLT	VOLTAGE CONTROL
VM	VOLTMETER
VR	VOLTAGE REGULATOR
VT	VOLTAGE TRANSFORMER
W	WATT
WV	WATT/VAR
XDCR	TRANSDUCER
Y	ANTI-PUMP FEATURE

CATERPILLAR SWITCHGEAR AMERICAS, LLC
CERTIFIED ENGINEERING ORIGINAL
SUBMITTAL RELEASE

CATERPILLAR®

PRODUCTION ENGINEER: Chealsea Canongo
APPLICATIONS ENGINEER: Brandon Darce

TITLE: NOLAND WASTE WATER TREATMENT PLANT
ABBREVIATION LEGEND
12.47kV UTILITY/GENERATOR PARALLELING SWITCHGEAR

NO.	REVISION	DATE
0.0	ISSUED FOR DESIGN REVIEW	08-06-2025
0.0	ISSUED FOR SUBMITTAL	08-25-25

REV LEVEL: 0.0
DESIGNER: B.ASCHWANDEN
DATE CREATED: 08-21-2025
MODIFIED BY: Rohith KJ
MODIFIED DATE: 08-25-2025
SHEET NUMBER: 3 OF 38
SCALE: N.T.S.
APPROVED BY: Brandon Darce
APPROVED DATE: 08-22-2025
FILE NAME: 41659-G01
G01

THIS DOCUMENT AND THE DETAILS EMBODIED THEREIN CONSTITUTE CONFIDENTIAL AND PROPRIETARY INFORMATION WHICH IS THE PROPERTY OF CATERPILLAR SWITCHGEAR AMERICAS, LLC. 4955 MARCON DRIVE, ALPHARETTA, GA, 30009, U.S.A., AND IS NOT TO BE USED OR REPRODUCED BY ANY PART EXCEPT AND TO THE EXTENT IN THE MANNER AUTHORIZED BY CATERPILLAR SWITCHGEAR AMERICAS, LLC

STANDARD SCHEMATIC SYMBOLS

MEDIUM VOLTAGE CIRCUIT BREAKER DRAWOUT

PROVISION BREAKER DRAWOUT

TRANSFORMER

LUGS

CURRENT TRANSFORMER

GENERATOR

POTENTIAL TRANSFORMER

POTENTIAL TRANSFORMER WITH PRIMARY AND SECONDARY FUSES

COMMUNICATION DEVICE SYMBOLS

RED LION DATA STATION GRAPHITE

SEL-700G GENERATOR PROTECTION RELAY

SEL-751 FEEDER PROTECTION

PHOENIX 5-PORT ETHERNET SWITCH

PHOENIX 8-PORT ETHERNET SWITCH

HIRSCHMANN UNMANAGED ETHERNET SWITCH

MODICON PLC

REMOTE PC

PPX II TRANSDUCER

TOUCHSCREEN PROCESSOR

19" WIDESCREEN TOUCHSCREEN

GENERATOR

PHOENIX ETHERNET BUS COUPLER

SUBMITTAL RELEASE

CATERPILLAR SWITCHGEAR AMERICAS, LLC CERTIFIED ENGINEERING OFFICIAL

CATERPILLAR®

PRODUCTION ENGINEER: Chealsea Canongo

APPLICATIONS ENGINEER: Brandon Darce

TITLE:
NOLAND WASTE WATER TREATMENT PLANT
SYMBOLS LEGEND
12.47kV UTILITY/GENERATOR PARALLELING SWITCHGEAR

REV LEVEL:	0.0
DESIGNER:	B.ASCHWANDEN
DATE CREATED:	08-21-2025
MODIFIED BY:	Rohith KJ
MODIFIED DATE:	08-25-2025
SHEET NUMBER:	4 OF 38
SCALE:	N.T.S.
APPROVED BY:	Brandon Darce
APPROVED DATE:	08-22-2025
FILE NAME:	41659-G02

G02

NO.	REVISION	DATE
0.0	ISSUED FOR DESIGN REVIEW	08-06-2025
0.0	ISSUED FOR SUBMITTAL	08-25-25

THIS DOCUMENT AND THE DETAILS EMBODIED THEREIN CONSTITUTE CONFIDENTIAL AND PROPRIETARY INFORMATION WHICH IS THE PROPERTY OF CATERPILLAR SWITCHGEAR AMERICAS, LLC. 4955 MARCONI DRIVE, ALPHARETTA, GA, 30009, U.S.A., AND IS NOT TO BE USED OR REPRODUCED BY ANY PART EXCEPT AND TO THE EXTENT IN THE MANNER AUTHORIZED BY CATERPILLAR SWITCHGEAR AMERICAS, LLC

GENERAL NOTES

SO# 41659

PRODUCT DESCRIPTION:

POWER ENVELOPE:	EATON
SYSTEM AC VOLTAGE:	12.47kV, 60Hz, 3Ø, 4-WIRE
PHASE ROTATION:	A-B-C
BASIC IMPULSE LEVEL:	95kV
SHORT CIRCUIT RATING:	25kA
GROUNDING:	SOLIDLY GROUNDED
DESIGN TYPE:	VCPW
CLASS:	15kV

BUS DESCRIPTION:

SYSTEM AMPERAGE:	1200A
BUS COATING:	FLUIDIZED EPOXY COATING
BUS PLATING:	SILVER PLATED
BUS SUPPORTS:	GLASS POLYESTER
TEMPERATURE RISE:	65°C RISE OVER 40°C
GND BUS PLATING:	NONE

ENCLOSURE DESCRIPTION:

STRUCTURE TYPE:	INDOOR
ACCESSIBILITY FRONT:	1/4 TURN KNOBS
ACCESSIBILTY REAR:	COVERS
COLOR:	ANSI 61
FLOOR PLATE:	NONE
MOTOR VOLTAGE:	125VDC
CLOSE VOLTAGE:	125VDC
TRIP VOLTAGE	125VDC
FUSING:	COMMON MOTOR / CLOSE / TRIP
UV TRIP VOLTAGE:	NONE
BREAKER PROTECTION:	FUSE
BREAKER RACKING:	EXTERNAL ELECTRICAL LEVERING DEVICE
BREAKER MOC:	9 POLES
BREAKER TOC:	9 POLES
INDOOR OPTIONS:	

CODE STANDARDS:

CERTIFICATION:	UL MV
SEISMIC CERTIFICATION:	IBC/CBC
OSHPD CERTIFICATION:	NONE

HANDLING:

FORKLIFT / CRANE

NAMEPLATE/MIMIC:

NAMEPLATES:	WHITE PHENOLIC WITH BLACK LETTERING
NAMEPLATE ATTACHMENT:	ADHESIVE
MIMIC BUS:	RED PLASTIC
MIMIC BUS ATTACHMENT:	ADHESIVE

BATTERIES:

PLEASE REFERENCE SHEET G06 FOR ADDITIONAL INFO

CONTROL WIRING INFORMATION:

WIRING:	ALL WIRING TO BE SIS WIRE TYPE.
WIRE LABELING:	WIRES SHALL BE LABELED WITH WIRE NUMBERS AND MARKINGS CONFORMING TO THE WIRING DRAWINGS.
TERMINATIONS:	PUSH-IN TYPE TERMINAL BLOCKS SHALL BE USED (WHERE APPLICABLE) ON ALL LOW VOLTAGE TERMINAL BLOCKS AND SHALL BE PHOENIX CONTACT SERIES, 600V, IEC RATED.

LIST OF OPTIONS / ACCESSORIES:

BARE NEUTRAL BUS
SPACE HEATERS
(6) ADJUSTABLE THERMOSTAT
(6) HUMIDISTAT
STANDARD ACCESSORIES SET
AUXILIARY LIFTING YOKE
(2) SPARE TOUCH-UP PAINT
PORTABLE BREAKER LIFTING DEVICE
PRINTER

CATERPILLAR SWITCHGEAR AMERICA'S, LLC
SUBMITTAL RELEASE
CERTIFIED ENGINEERING DOCUMENT

CATERPILLAR®

PRODUCTION ENGINEER: Chealsea Canongo
APPLICATIONS ENGINEER: Brandon Darce

TITLE: NOLAND WASTE WATER TREATMENT PLANT
GENERAL NOTES-SWITCHGEAR
12.47kV UTILITY/GENERATOR PARALLELING SWITCHGEAR

NO.	REVISION	DATE
0.0	ISSUED FOR DESIGN REVIEW	08-06-2025
0.0	ISSUED FOR SUBMITTAL	08-25-25

APPROVED BY: Brandon Darce
APPROVED DATE: 08-22-2025
FILE NAME: 41659-G03

SCALE: N.T.S.
REV LEVEL: 0.0
DESIGNER: B.ASCHWANDEN
DATE CREATED: 08-21-2025
MODIFIED BY: Rohith KJ
MODIFIED DATE: 08-25-2025
SHEET NUMBER: 5 OF 38

G03

THIS DOCUMENT AND THE DETAILS EMBODIED THEREIN CONSTITUTE CONFIDENTIAL AND PROPRIETARY INFORMATION WHICH IS THE PROPERTY OF CATERPILLAR SWITCHGEAR AMERICA'S, LLC, 4855 MARCONI DRIVE, ALPHARETTA, GA, 30009, U.S.A., AND IS NOT TO BE USED OR REPRODUCED BY ANY PART EXCEPT AND TO THE EXTENT IN THE MANNER AUTHORIZED BY CATERPILLAR SWITCHGEAR AMERICAS, LLC

GENERAL NOTES

SO# 41659

PRODUCT DESCRIPTION:

MANUFACTURER:	HOFFMAN
SYSTEM AC VOLTAGE:	120VAC
SYSTEM DC VOLTAGE:	24VDC

ENCLOSURE DATA:

ENCLOSURE TYPE:	TYPE 1
ENCLOSURE:	FREE-STANDING
REGULATION:	UL 508A
COLOR:	ANSI 61 GRAY
HANDLING:	FORKLIFT/CRANE

NAMEPLATE/MIMIC:

NAMEPLATES:	WHITE PHENOLIC WITH BLACK LETTERING
NAMEPLATE ATTACHMENT:	ADHESIVE
MIMIC BUS:	NONE
MIMIC BUS ATTACHMENT:	NONE

BATTERIES:

PLEASE REFERENCE SHEET G06 FOR ADDITIONAL INFO

CONTROL WIRING INFORMATION:

WIRING:	ALL WIRING TO BE SIS WIRE TYPE.
WIRE LABELING:	WIRES SHALL BE LABELED WITH WIRE NUMBERS AND MARKINGS CONFORMING TO THE WIRING DRAWINGS.
TERMINATIONS:	PUSH-IN TYPE TERMINAL BLOCKS SHALL BE USED (WHERE APPLICABLE) ON ALL LOW VOLTAGE TERMINAL BLOCKS AND SHALL BE PHOENIX CONTACT SERIES, 600V, IEC RATED.

LIST OF OPTIONS / ACCESSORIES:

GLAND PLATES

SEISMIC MOUNTING PAD

4000 BTU AIR CONDITIONER

COMPACT LED LIGHT-MOTION, MAGNETIC MOUNTING

CATERPILLAR SWITCHGEAR AMERICAS, LLC CERTIFIED ENGINEERING DRAWING SUBMITTAL RELEASE

CATERPILLAR®

PRODUCTION ENGINEER: Chealsea Canongo
APPLICATIONS ENGINEER: Brandon Darce

NO.	REVISION	DATE
0.0	ISSUED FOR DESIGN REVIEW	08-06-2025
0.0	ISSUED FOR SUBMITTAL	08-25-25

TITLE:
NOLAND WASTE WATER TREATMENT PLANT
GENERAL NOTES-CONTROL PANELS
12.47kV UTILITY/GENERATOR PARALLELING SWITCHGEAR

REV LEVEL: 0.0
DESIGNER: B.ASCHWANDEN
DATE CREATED: 08-21-2025
MODIFIED BY: Rohith KJ
MODIFIED DATE: 08-25-2025
SHEET NUMBER: 6 OF 38

APPROVED BY: Brandon Darce
APPROVED DATE: 08-22-2025
SCALE: N.T.S.
G03A
FILE NAME: 41659-G03A

THIS DOCUMENT AND THE DETAILS EMBODIED THEREIN CONSTITUTE CONFIDENTIAL AND PROPRIETARY INFORMATION WHICH IS THE PROPERTY OF CATERPILLAR SWITCHGEAR AMERICAS, LLC. 4855 MARCONI DRIVE, ALPHARETTA, GA, 30009, U.S.A., AND IS NOT TO BE USED OR REPRODUCED BY ANY PART EXCEPT AND TO THE EXTENT IN THE MANNER AUTHORIZED BY CATERPILLAR SWITCHGEAR AMERICAS, LLC

MV CIRCUIT BREAKER, LUGGING, AND CONDUIT ENTRY SCHEDULE

CAT DEVICE ID	CUSTOMER DEVICE ID	LOCATION	MANUFACTURE CB TYPE	FRAME (A)	INTERRUPT CAP. (kA)	OPERATION	MOUNTING	CHARGE	SHUNT CLOSE	SHUNT TRIP	AUXILIARY	MOC	TOC	KIRK KEY	SPARE	SPARE	SPARE	LUGS PER PHASE	NEUTRAL LUGS	GROUND LUGS	CONDUIT ENTRY
SWGR INFO			CIRCUIT BREAKER INFORMATION								CIRCUIT BREAKER ACCESSORIES							COMPRESSION LUGS (NOTE 1)			
52N1	52U1	1D	EATON 15 VCP-W25	1200	25	E.O.	D.O.	125VDC	125VDC	125VDC	X	X	X					TBD	TBD	TBD	BOTTOM
52D2 (PROV)	52D2 (PROV)	2A	EATON 15 VCP-W25	1200	25	E.O.	D.O.	125VDC	125VDC	125VDC	X	X	X					TBD	TBD	TBD	BOTTOM
52D1	52D1	2D	EATON 15 VCP-W25	1200	25	E.O.	D.O.	125VDC	125VDC	125VDC	X	X	X					TBD	TBD	TBD	BOTTOM
52BT1	52T1	3A	EATON 15 VCP-W25	1200	25	E.O.	D.O.	125VDC	125VDC	125VDC	X	X	X					N/A	N/A	N/A	N/A
LOAD LUGS		4	EATON	1200														TBD	TBD	TBD	BOTTOM
52G1	52G1	5D	EATON 15 VCP-W25	1200	25	E.O.	D.O.	125VDC	125VDC	125VDC	X	X	X					TBD	TBD	TBD	BOTTOM
52G2	52G2	6D	EATON 15 VCP-W25	1200	25	E.O.	D.O.	125VDC	125VDC	125VDC	X	X	X					TBD	TBD	TBD	BOTTOM

NOTE 1) CABLE LUGS WILL BE SUPPLIED BY ELECTRICAL CONTRACTOR

SUBMITTAL RELEASE

CATERPILLAR SWITCHGEAR AMERICAS, LLC CERTIFIED ENGINEERING DRAWING

CATERPILLAR®

PRODUCTION ENGINEER: Chealsea Canongo
APPLICATIONS ENGINEER: Brandon Darce

TITLE:
NOLAND WASTE WATER TREATMENT PLANT
CIRCUIT BREAKER SCHEDULE
12.47kV UTILITY/GENERATOR PARALLELING SWITCHGEAR

NO.	REVISION	DATE
0.0	ISSUED FOR DESIGN REVIEW	08-06-2025
0.0	ISSUED FOR SUBMITTAL	08-25-25

APPROVED BY: Brandon Darce
APPROVED DATE: 08-22-2025
FILE NAME: 41659-G04

DESIGNER: B.ASCHWANDEN
DATE CREATED: 08-21-2025
SHEET NUMBER: 7 OF 38

MODIFIED BY: Rohith KJ
MODIFIED DATE: 08-25-2025

SCALE: N.T.S.
REV LEVEL: 0.0

G04

THIS DOCUMENT AND THE DETAILS EMBODIED THEREIN CONSTITUTE CONFIDENTIAL AND PROPRIETARY INFORMATION WHICH IS THE PROPERTY OF CATERPILLAR SWITCHGEAR AMERICAS, LLC. 4855 MARCONI DRIVE, ALPHARETTA, GA, 30009, U.S.A., AND IS NOT TO BE USED OR REPRODUCED BY ANY PART EXCEPT AND TO THE EXTENT IN THE MANNER AUTHORIZED BY CATERPILLAR SWITCHGEAR AMERICAS, LLC

DIMENSIONS – INCHES
[mm]

ESTIMATED SHIPPING WEIGHTS:

SECT 1 – 2350 LBS.
SECT 2 – 3100 LBS.
SECT 3 – 2350 LBS.
SECT 4 – 2100 LBS.
SECT 5 – 2350 LBS.
SECT 6 – 2350 LBS.

ESTIMATED SHIPPING SPLIT WEIGHTS:
SS SECT'S 1–2: 5450 LBS.
SS SECT'S 3–4: 4450 LBS.
SS SECT'S 5–6: 4700 LBS.

✳ SUPPLIED BY OTHERS

▽ SUPPLIED BY DEALER

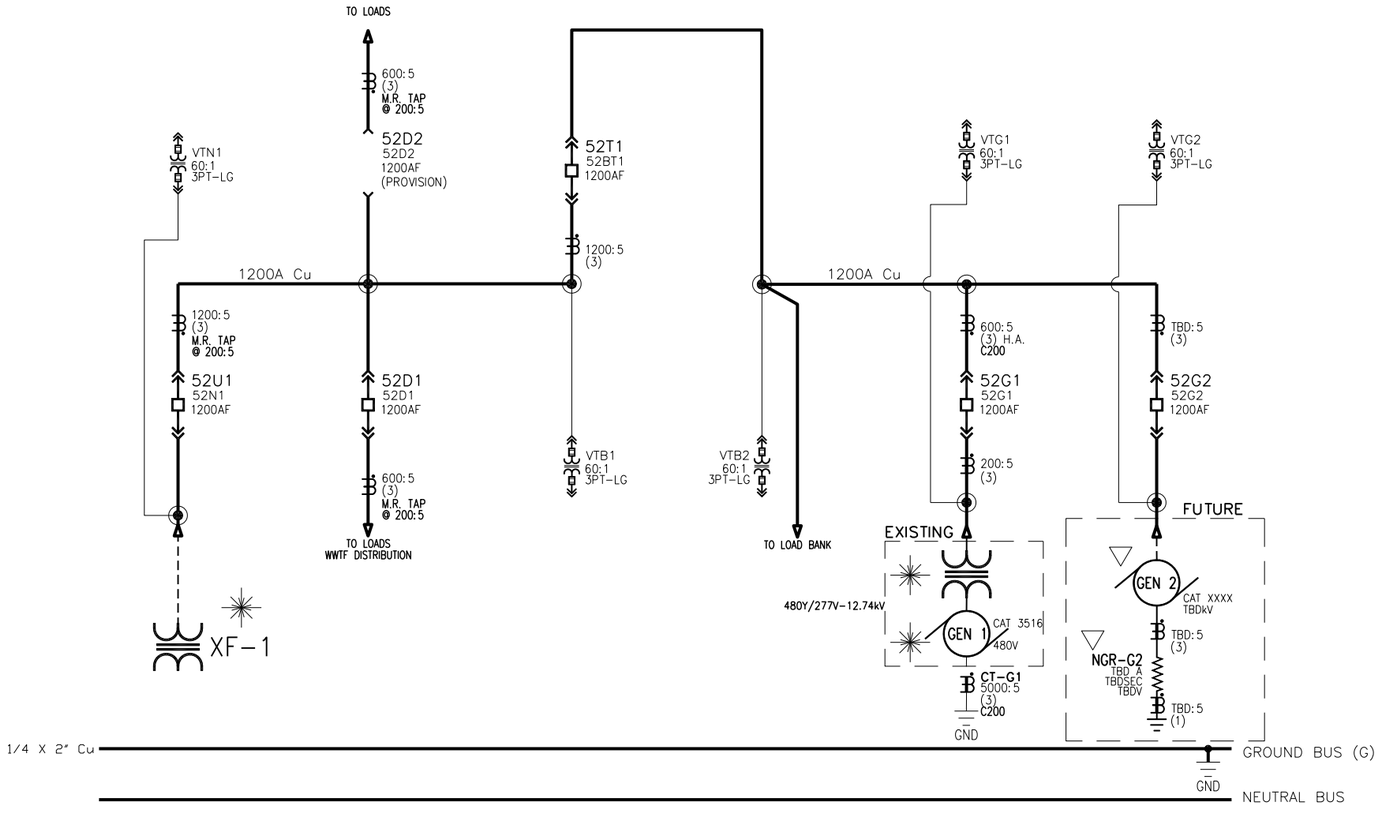

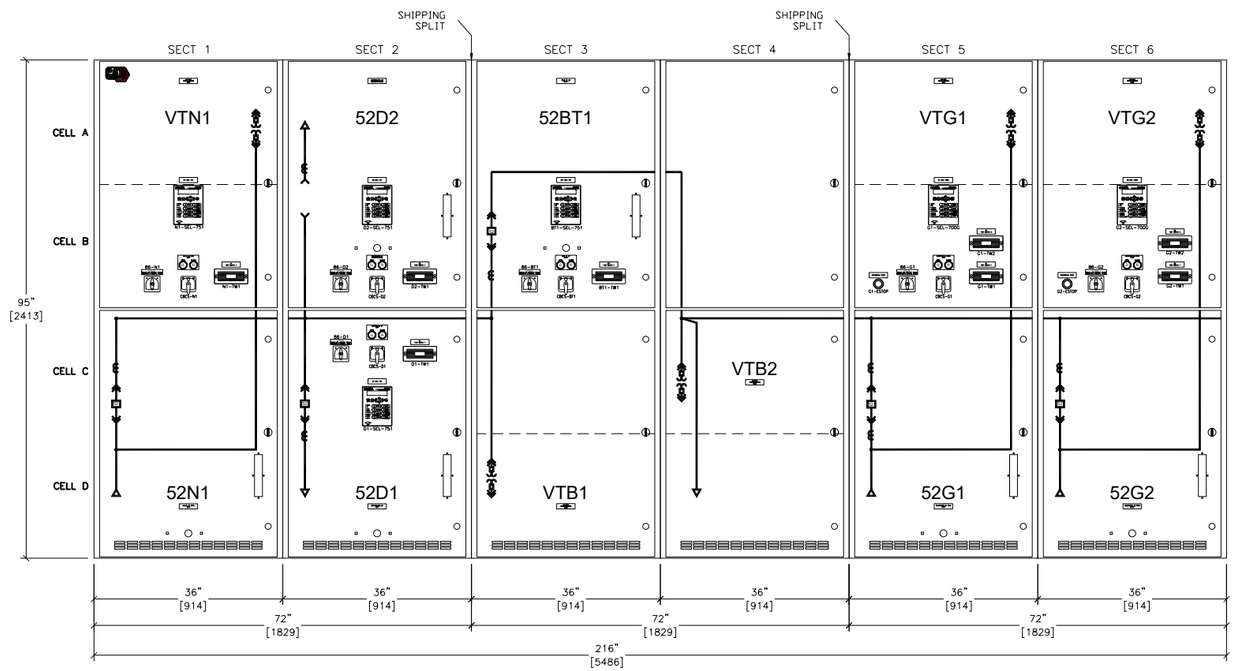

FRONT ELEVATION
PARALLELING SWITCHGEAR

SUBMITTAL RELEASE
CATERPILLAR SWITCHGEAR AMERICAS, LLC
CERTIFIED ENGINEERING DRAWING

CATERPILLAR®

PRODUCTION ENGINEER:	Chealsea Canonga
APPLICATIONS ENGINEER:	Brandon Darce
MODIFIED BY:	Rohith KJ
MODIFIED DATE:	08-25-2025
SHEET NUMBER:	8 OF 38

TITLE:
NOLAND WASTE WATER TREATMENT PLANT
FRONT ELEVATION & ONE-LINE-SWITCHGEAR
12.47kV UTILITY/GENERATOR PARALLELING SWITCHGEAR

DESIGNER:	B.ASCHWANDEN
DATE CREATED:	08-21-2025
REV LEVEL:	0.0
SCALE:	N.T.S.
APPROVED BY:	Brandon Darce
APPROVED DATE:	08-22-2025
FILE NAME:	41659-G05

G05

NO.	REVISION	DATE
0.0	ISSUED FOR DESIGN REVIEW	08-06-2025
0.0	ISSUED FOR SUBMITTAL	08-25-25

THIS DOCUMENT AND THE DETAILS EMBODIED THEREIN CONSTITUTE CONFIDENTIAL AND PROPRIETARY INFORMATION WHICH IS THE PROPERTY OF CATERPILLAR SWITCHGEAR AMERICAS, LLC. 4955 MARCON DRIVE, ALPHARETTA, GA, 30009, U.S.A., AND IS NOT TO BE USED OR REPRODUCED BY ANY PART EXCEPT AND TO THE EXTENT IN THE MANNER AUTHORIZED BY CATERPILLAR SWITCHGEAR AMERICAS, LLC

DIMENSIONS – INCHES
[mm]

ESTIMATED SHIPPING WEIGHTS:

SECT CP1 – 850 LBS
SECT CP2 – 850 LBS

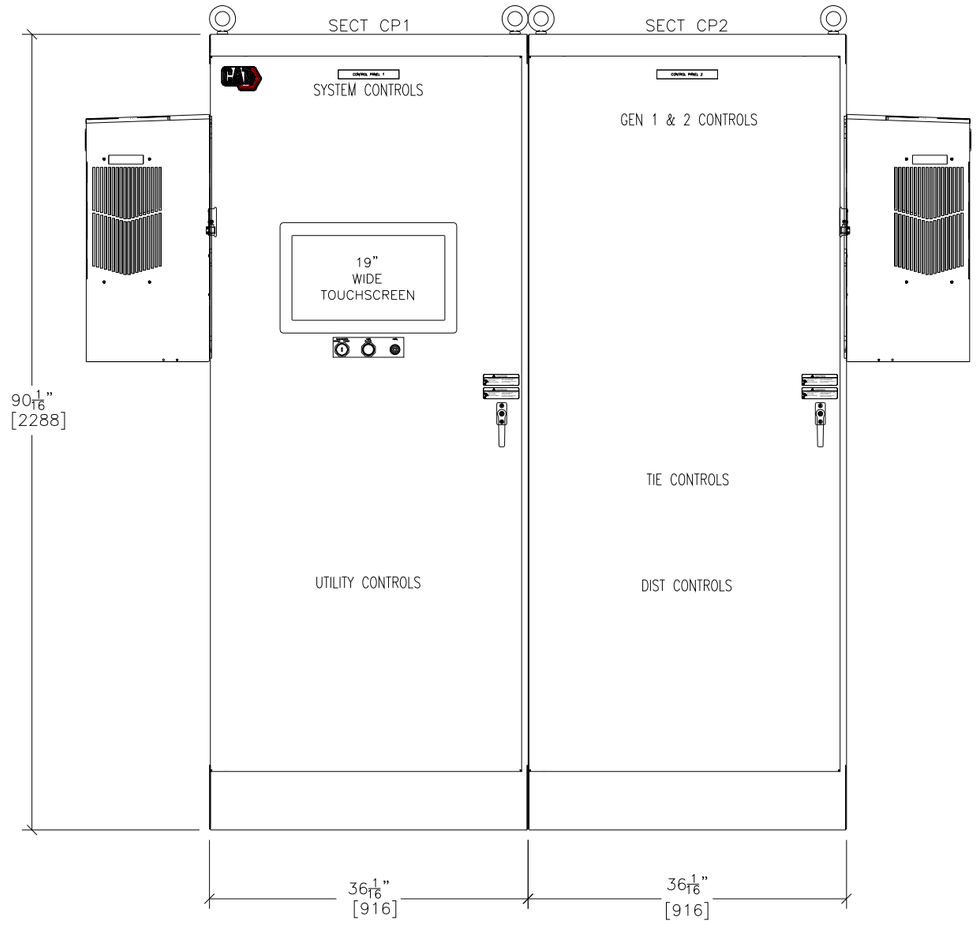

FRONT ELEVATION
CONTROL PANEL

CATERPILLAR SWITCHGEAR AMERICAS, LLC
CERTIFIED ENGINEERING DRAWING
SUBMITTAL RELEASE

CATERPILLAR®

PRODUCTION ENGINEER: Chealsea Canonga
APPLICATIONS ENGINEER: Brandon Darce

TITLE:
NOLAND WASTE WATER TREATMENT PLANT
FRONT ELEVATION–CONTROL PANELS
12.47kV UTILITY/GENERATOR PARALLELING SWITCHGEAR

APPROVED BY:	SCALE:	REV LEVEL:
Brandon Darce	N.T.S.	0.0
APPROVED DATE: 08–22–2025		G05A
FILE NAME: 41659–G05A		

DESIGNER:	MODIFIED BY:
B.ASCHWANDEN	Rohith KJ
DATE CREATED: 08–21–2025	MODIFIED DATE: 08–25–2025
SHEET NUMBER: 9	OF 38

NO.	REVISION	DATE
0.0	ISSUED FOR DESIGN REVIEW	08–06–2025
0.0	ISSUED FOR SUBMITTAL	08–25–25

THIS DOCUMENT AND THE DETAILS EMBODIED THEREIN CONSTITUTE CONFIDENTIAL AND PROPRIETARY INFORMATION WHICH IS THE PROPERTY OF CATERPILLAR SWITCHGEAR AMERICAS, LLC. 4660 MARCOM DRIVE, ALPHARETTA, GA. 30005, U.S.A., AND IS NOT TO BE USED OR REPRODUCED BY ANY PART EXCEPT AND TO THE EXTENT IN THE MANNER AUTHORIZED BY CATERPILLAR SWITCHGEAR AMERICAS, LLC

EATON VCP-W NOTES:

1. CUSTOMER'S GROUND PROVISIONS, PROVIDED AS SHOWN BY SYMBOL ON SHOP ORDER SECTIONAL SIDE VIEWS.

2. RECOMMENDED MINIMUM CLEARANCE TO REAR OF VAC-CLAD-W: 36 INCHES (914.4 MM).

3. RECOMMENDED MINIMUM CLEARANCE TO LH AND RH SIDES OF VAC-CLAD-W: 32 INCHES (812.8 MM).

4. PRIMARY CONDUIT PROJECTION MUST NOT EXCEED 2 INCHES.

5. MINIMUM CLEARANCE TO FRONT OF SWITCHGEAR: 70.00" (1778.0mm)

6. ANCHOR LOCATIONS: INDOOR-.50-INCH (12.7mm) BOLTS OR WELD

7. ANCHOR LOCATIONS: OUTDOOR-.50-INCH (12.7mm) BOLTS OR WELD

8. FINISH FOUNDATION SURFACES SHALL BE LEVEL WITHIN 0.06" (1.5mm) IN 36.00" (914.4mm) LEFT TO RIGHT, FRONT-TO-BACK AND DIAGONALLY, AS MEASURED BY A LASER LEVEL.

9. 5.0" MINIMUM FOUNDATION SUPPORTS FOR ATTACHING SWITCHGEAR

DIMENSIONS - INCHES / MM

CONDUIT ENTRY FOR DOUBLE BREAKER STRUCTURES NOTE:

CONDUIT ENTRY NOTE:
MANY DIFFERENT VERSIONS OF CONDUIT ENTRY OPENINGS ARE AVAILABLE. CONDUIT ENTRY OPENINGS ARE BASED ON HOW MANY LUGS PER PHASE. LUGS MUST BE DETERMINED AT TIME OF ORDER OR ONLY ONE LUG PER PHASE WILL BE ORDERED.

⊗ APPROXIMATE CENTER OF GRAVITY

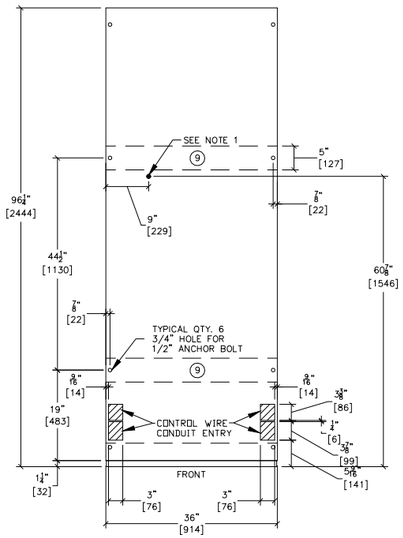

PLAN VIEW - (BOTTOM CONDUIT ENTRY)
TYPICAL FOR:
SECT 3

C & D TWO TIER, SINGLE ROW, SEISMIC BATTERY RACK
PART # RD05166BD-2TEP
125VDC SEISMIC BATTERY RACK
APPROXIMATE DIMENSIONS
HEIGHT: 34"

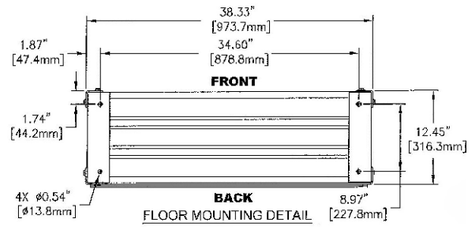

FLOOR MOUNTING DETAIL

125VDC RACK FLOOR MOUNTING DETAIL

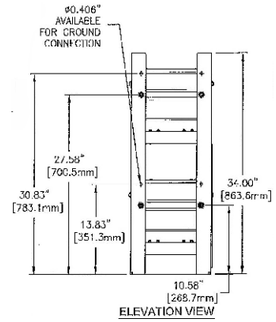

ELEVATION VIEW

125VDC RACK SIDE ELEVATION

A77DE-12-130V-ABD1-60LR
125VDC WALL-MOUNTED
BATTERY CHARGER
HEIGHT: 23.6"

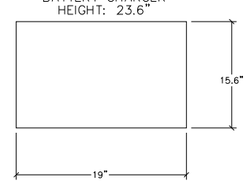

TOP VIEW

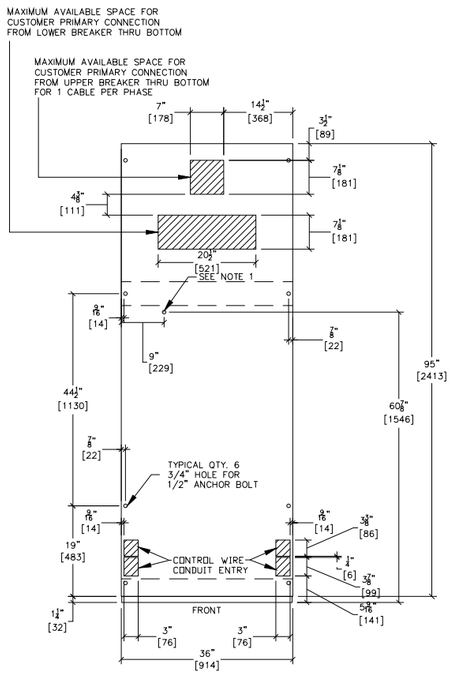

PLAN VIEW - (BOTTOM CONDUIT ENTRY)
TYPICAL FOR:
SECT 2

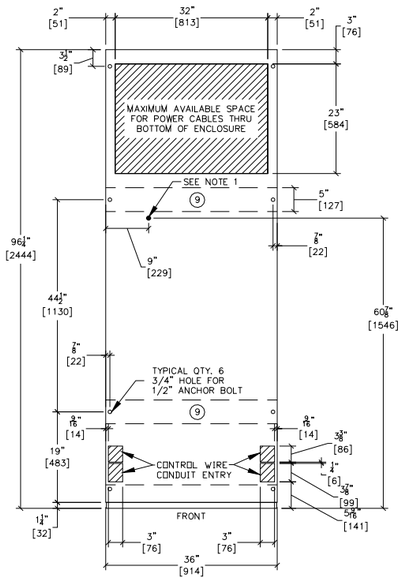

PLAN VIEW - (BOTTOM CONDUIT ENTRY)
TYPICAL FOR:
SECTs 1,4-6

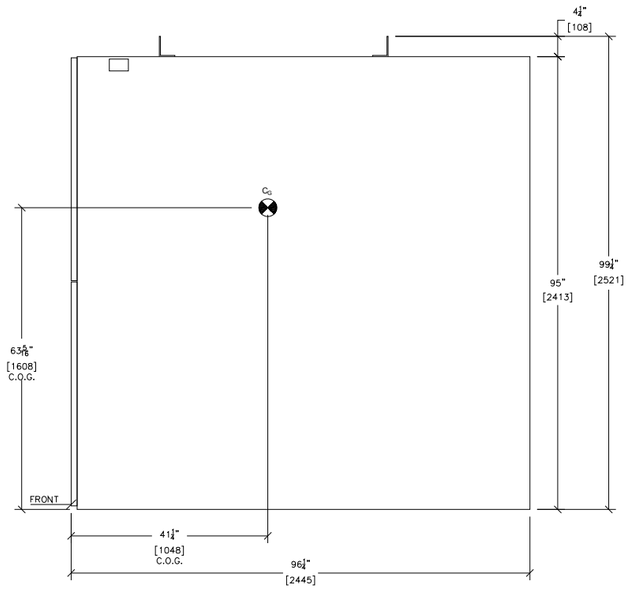

SIDE VIEW
TYPICAL FOR:
SECTs 1-6

SUBMITTAL RELEASE
CERTIFIED ENGINEERING DOCUMENT
CATERPILLAR SWITCHGEAR AMERICAS, LLC

CATERPILLAR®

PRODUCTION ENGINEER: Chealsea Canonga
APPLICATIONS ENGINEER: Brandon Darce

TITLE:
NOLAND WASTE WATER TREATMENT PLANT
CONDUIT ENTRY AND BATTERY RACK-SWITCHGEAR
12.47kV UTILITY/GENERATOR PARALLELING SWITCHGEAR

NO.	REVISION	DATE
0.0	ISSUED FOR DESIGN REVIEW	08-06-2025
0.0	ISSUED FOR SUBMITTAL	08-25-25

DESIGNER: B.ASCHWANDEN
MODIFIED BY: Rohith KJ
DATE CREATED: 08-21-2025
MODIFIED DATE: 08-25-2025
REV LEVEL: 0.0
SCALE: N.T.S.
SHEET NUMBER: 10 OF 38
C06
APPROVED BY: Brandon Darce
APPROVED DATE: 08-22-2025
FILE NAME: 41659-G06

THIS DOCUMENT AND THE DETAILS EMBODIED THEREIN CONSTITUTE CONFIDENTIAL AND PROPRIETARY INFORMATION WHICH IS THE PROPERTY OF CATERPILLAR SWITCHGEAR AMERICAS, LLC, 4651 MARCON DRIVE, ALPHARETTA, GA, 30009, U.S.A., AND IS NOT TO BE USED OR REPRODUCED BY ANY PART EXCEPT AND TO THE EXTENT IN THE MANNER AUTHORIZED BY CATERPILLAR SWITCHGEAR AMERICAS, LLC

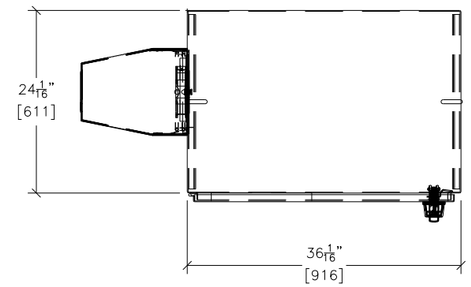

TOP VIEW
TYPICAL FOR
SECT CP1

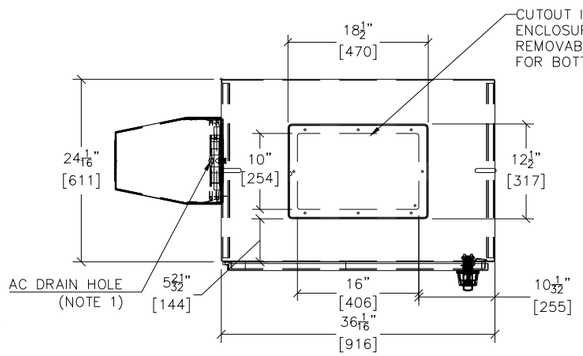

TOP VIEW
BOTTOM OR TOP AVAILABLE
CONDUIT ENTRY SPACE
TYPICAL FOR
SECT CP1

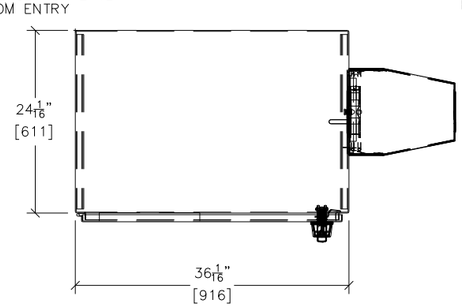

TOP VIEW
TYPICAL FOR
SECT CP2

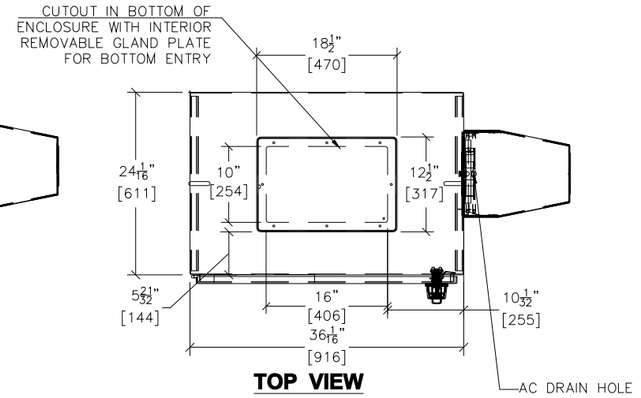

TOP VIEW
BOTTOM OR TOP AVAILABLE
CONDUIT ENTRY SPACE
TYPICAL FOR:
SECT CP2

CABINET TO PANEL
GROUND DETAIL

CONTROL PANEL GROUNDING NOTES:

1. INSERT THE ¼–20x7/8 BOLT THROUGH THE HOLE IN THE PANEL AS SHOWN

2. SECURE BOLT WITH KEPS NUT. THE KEPS NUTS MUST PENETRATE INTO THE PAINT TO INSURE ELECTRICAL CONTINUITY

3. ATTACH THE GROUND WIRE AND SECURE WITH ¼–20 HEX NUT AS SHOWN

4. INSTALL THE LOCKWASHER UNDER ONE OF THE NUTS SECURING THE PANEL TO INSURE GROUNDING BETWEEN THE PANEL AND THE ENCLOSURE.

5. ATTACH GROUNDING LABEL INCLUDED ADJACENT TO THE BOLT AS SHOWN.

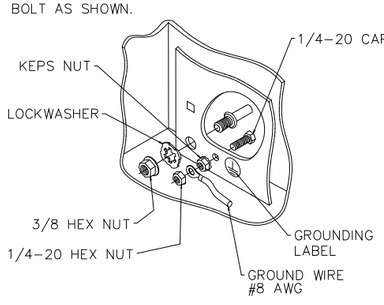

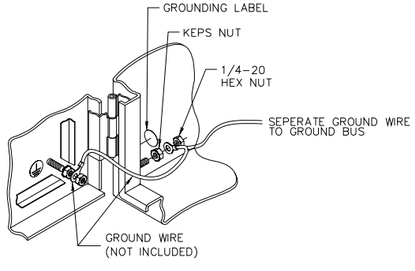

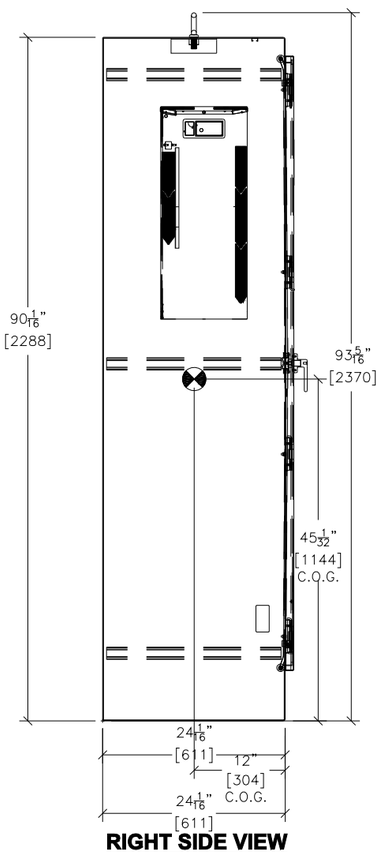

RIGHT SIDE VIEW
TYPICAL FOR:
SECT CP1

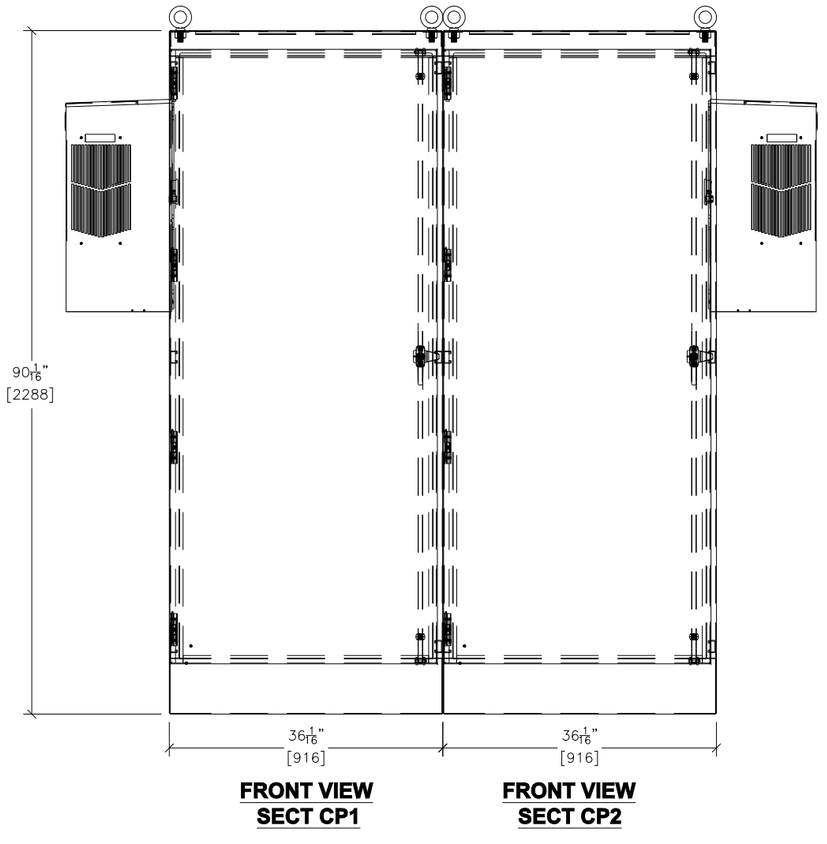

FRONT VIEW
SECT CP1

FRONT VIEW
SECT CP2

NOTE: LIFTING EYES CAN BE REMOVED AND MOUNTING HOLES USED TO ADD BRACE TO TOP OF CABINET AND WALL.

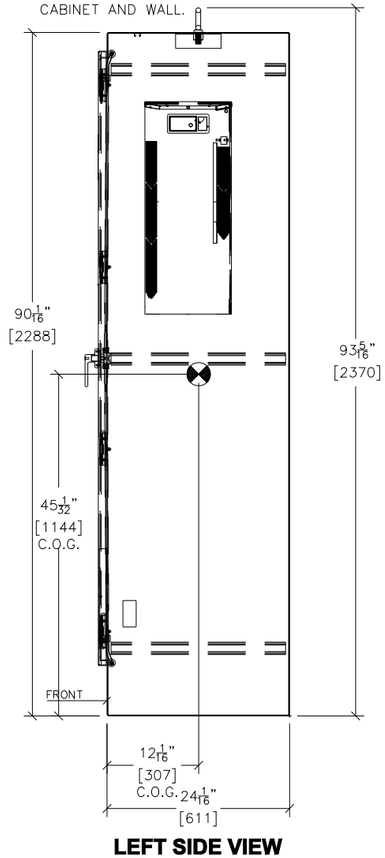

LEFT SIDE VIEW
TYPICAL FOR:
SECT CP2

NO.	REVISION	DATE
0.0	ISSUED FOR DESIGN REVIEW	08-06-2025
0.0	ISSUED FOR SUBMITTAL	08-25-25

SUBMITTAL RELEASE
CATERPILLAR SWITCHGEAR AMERICA'S, LLC
CERTIFIED ENGINEERING DRAWING

CATERPILLAR®

PRODUCTION ENGINEER: Chealsea Canonga
APPLICATIONS ENGINEER: Brandon Darce

TITLE:
NOLAND WASTE WATER TREATMENT PLANT
CONDUIT ENTRY–CONTROL PANELS
12.47kV UTILITY/GENERATOR PARALLELING SWITCHGEAR

DESIGNER: B.ASCHWANDEN
DATE CREATED: 08-21-2025
MODIFIED BY: Rohith KJ
MODIFIED DATE: 08-25-2025
REV LEVEL: 0.0
SCALE: N.T.S.
APPROVED BY: Brandon Darce
APPROVED DATE: 08-22-2025
SHEET NUMBER: 11 OF 38
FILE NAME: 41659-G06A
G06A

THIS DOCUMENT AND THE DETAILS EMBODIED THEREIN CONSTITUTE CONFIDENTIAL AND PROPRIETARY INFORMATION WHICH IS THE PROPERTY OF CATERPILLAR SWITCHGEAR AMERICA'S, LLC, 4955 MARCONI DRIVE, ALPHARETTA, GA, 30009, U.S.A., AND IS NOT TO BE USED OR REPRODUCED BY ANY PART EXCEPT AND TO THE EXTENT IN THE MANNER AUTHORIZED BY CATERPILLAR SWITCHGEAR AMERICAS, LLC

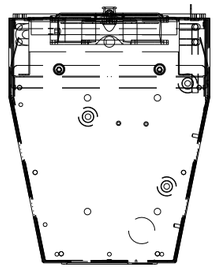

TOP/BOTTOM VIEW

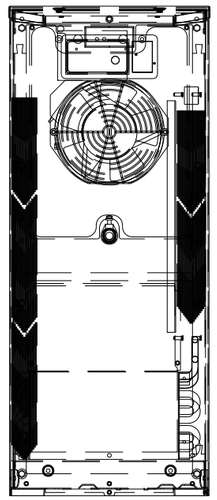

FRONT/REAR VIEW

TYPICAL FOR:
HEATING/COOLING UNIT
N280416G151 4000BTU
(SECTs CP1–CP2)

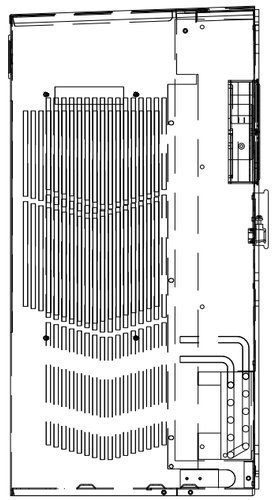

SIDES VIEW

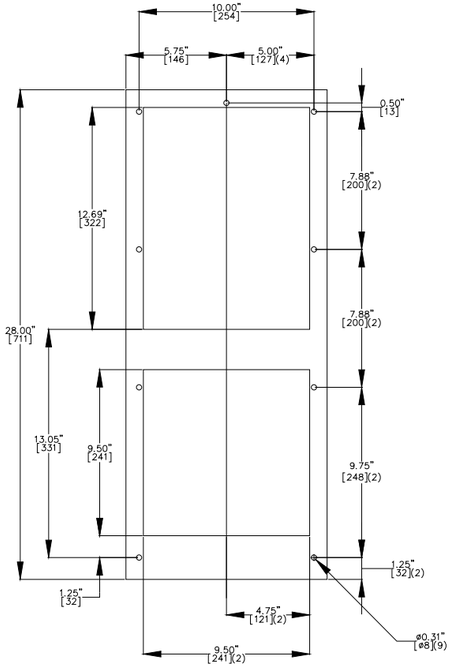

HEATING/COOLING UNIT
CUTOUT DIMENSIONS

CATERPILLAR SWITCHGEAR AMERICAS, LLC
CERTIFIED ENGINEERING DOCUMENT
SUBMITTAL RELEASE

CATERPILLAR®

PRODUCTION ENGINEER: Chealsea Canonga
APPLICATIONS ENGINEER: Brandon Darce

TITLE:
NOLAND WASTE WATER TREATMENT PLANT
AC UNIT & CONTROL PANEL VIEWS (CP1&CP2)
12.47kV UTILITY/GENERATOR PARALLELING SWITCHGEAR

SCALE:	REV LEVEL:	DESIGNER:	MODIFIED BY:
N.T.S.	0.0	B.ASCHWANDEN	Rohith KJ

	DATE CREATED:	MODIFIED DATE:
G06B	08-21-2025	08-25-2025

SHEET NUMBER: 12 OF 38

APPROVED BY: Brandon Darce
APPROVED DATE: 08-22-2025
FILE NAME: 41659-G06B

NO.	REVISION	DATE
0.0	ISSUED FOR DESIGN REVIEW	08-06-2025
0.0	ISSUED FOR SUBMITTAL	08-25-25

THIS DOCUMENT AND THE DETAILS EMBODIED THEREIN CONSTITUTE CONFIDENTIAL AND PROPRIETARY INFORMATION WHICH IS THE PROPERTY OF CATERPILLAR SWITCHGEAR AMERICAS, LLC, 4665 MARCONI DRIVE, ALPHARETTA, GA, 30009, U.S.A., AND IS NOT TO BE USED OR REPRODUCED BY ANY PART EXCEPT AND TO THE EXTENT IN THE MANNER AUTHORIZED BY CATERPILLAR SWITCHGEAR AMERICAS, LLC

APPROXIMATE CENTER OF GRAVITY

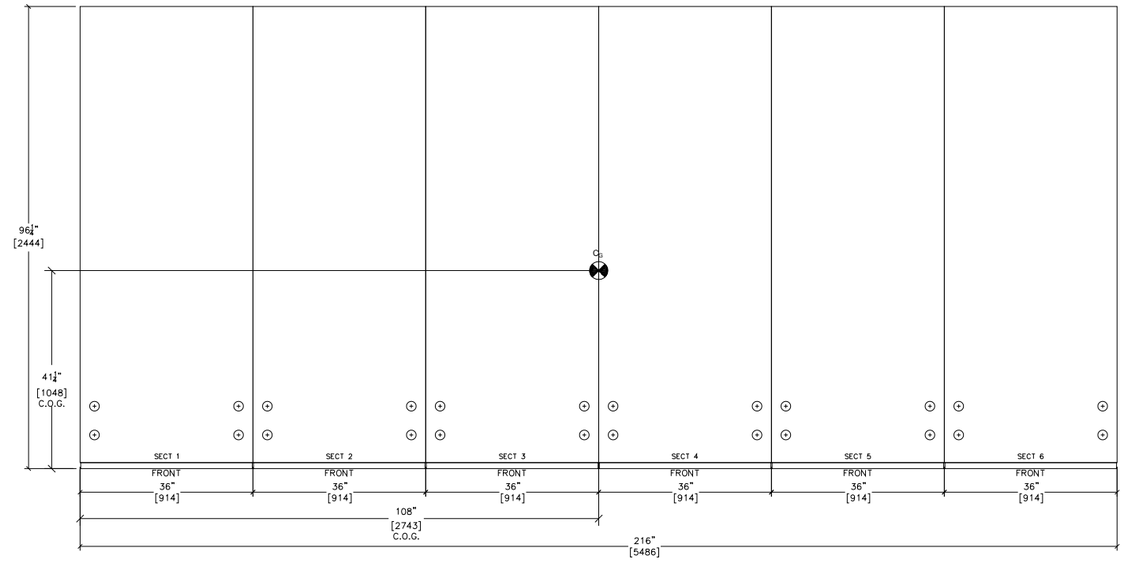

FLOOR PLAN VIEW
TOP CONDUIT ENTRY

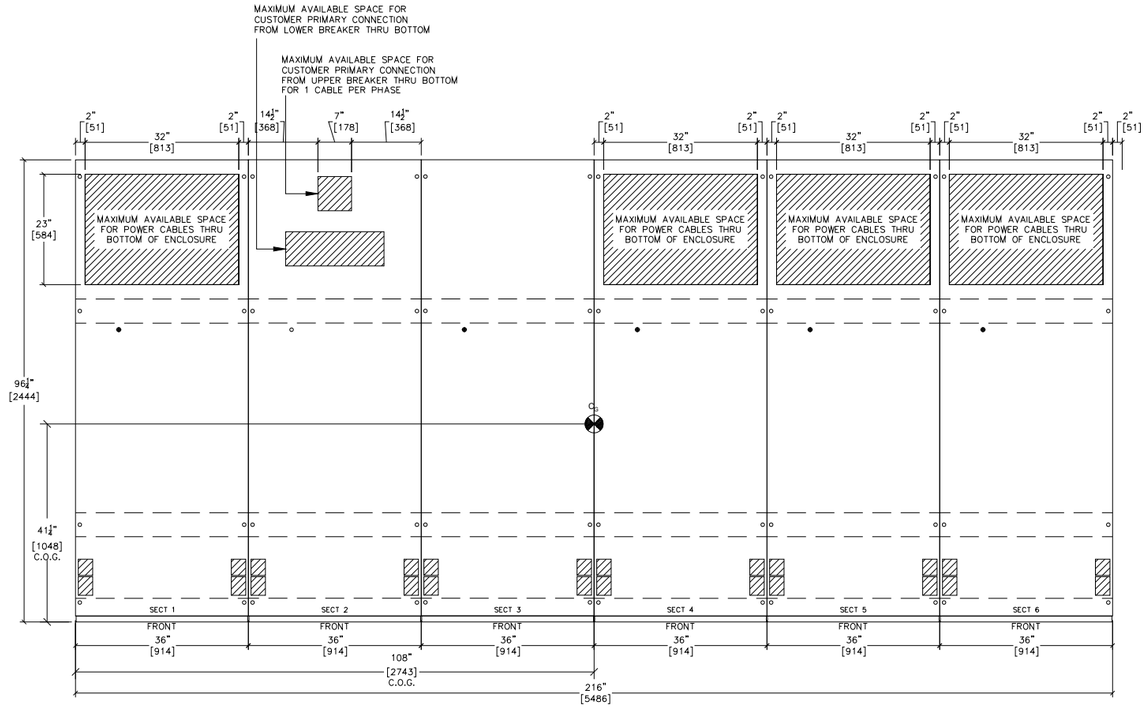

FLOOR PLAN VIEW
BOTTOM CONDUIT ENTRY

SUBMITTAL RELEASE
CERTIFIED ENGINEERING DRAWING
CATERPILLAR SWITCHGEAR AMERICAS, LLC

CATERPILLAR®

PRODUCTION ENGINEER: Chealsea Canonga
APPLICATIONS ENGINEER: Brandon Darce

TITLE:
NOLAND WASTE WATER TREATMENT PLANT
FLOOR PLAN-SWITCHGEAR
12.47kV UTILITY/GENERATOR PARALLELING SWITCHGEAR

DESIGNER:	REV LEVEL:
B.ASCHWANDEN	0.0
DATE CREATED:	MODIFIED BY:
08-21-2025	Rohith KJ
MODIFIED DATE:	
08-25-2025	
SHEET NUMBER: 13 OF 38	

SCALE:	APPROVED BY:
N.T.S.	Brandon Darce
APPROVED DATE:	
08-22-2025	
FILE NAME:	
41659-G07	

G07

NO.	REVISION	DATE
0.0	ISSUED FOR DESIGN REVIEW	08-06-2025
0.0	ISSUED FOR SUBMITTAL	08-25-25

THIS DOCUMENT AND THE DETAILS EMBODIED THEREIN CONSTITUTE CONFIDENTIAL AND PROPRIETARY INFORMATION WHICH IS THE PROPERTY OF CATERPILLAR SWITCHGEAR AMERICAS, LLC, 4665 MARCON DRIVE, ALPHARETTA, GA, 30009, U.S.A., AND IS NOT TO BE USED OR REPRODUCED BY ANY PART EXCEPT AND TO THE EXTENT IN THE MANNER AUTHORIZED BY CATERPILLAR SWITCHGEAR AMERICAS, LLC

INDOOR SWITCHGEAR NOTES:

1. THE MINIMUM NUMBER OF CABINETS IN A LINEUP MUST NOT BE LESS THAN 2. ALL CABINETS MUST BE BOLTED SIDE BY SIDE IN ONE ASSEMBLY INCLUDING THE INTERFACE AT THE SHIPPING JOINTS.
2. EACH CABINET MUST BE BOLTED TO THE FLOOR USING SIX (6) 1/2" GRADE 5 BOLTS (OR EQUIVALENT). REFER TO THE SHOP ORDER DRAWING PACKAGE FOR THE APPLICATION DRAWING, ALTERNATE (HOLES MAY BE PLUG WELDED INSTEAD OF BOLTED).
3. THE MAXIMUM LOAD PER BOLT FOR THIS ARRANGEMENT IS: 6420 LBS. TENSION AND 2120 LBS. PER SHEAR.
4. THE CASES WHERE IT IS NOT POSSIBLE TO INSTALL ALL BOLTS AND THE MAXIMUM FLOOR ACCELERATION DOES NOT EXCEED 0.6G THEN THE FOLLOWING SHALL BE THE MINIMUM MOUNTING REQUIREMENTS. ALTERNATE METHODS FOR MOUNTING OF INDOOR MV SWITCHGEAR LINEUPS.
   a. THE FIRST AND LAST CABINETS IN THE LINEUP MUST BE BOLTED TO THE FLOOR USING SIX (6) 1/2" GRADE 5 BOLTS PER CABINET. SEE FIGURE LINEUP. ALTERNATE (HOLES MAY BE WELDED INSTEAD OF BOLTED).
   b. THE INNER CABINETS MUST BE BOLTED TO THE FLOOR USING THREE (3) 1/2" GRADE 5 BOLTS PER CABINET. ONE CABINET MAY HAVE ONLY TWO (2) BOLTS AND ONE (1) CABINET MAY HAVE ONE (1) BOLT AS SHOWN IN THE FIGURE BELOW. ALTERNATE HOLES MAY BE PLUG WELDED.
   c. THE MAXIMUM LOAD PER BOLT FOR THIS ARRANGEMENT IS: 7100 LBS. OF TENSION AND 2500 LBS. OF SHEAR.

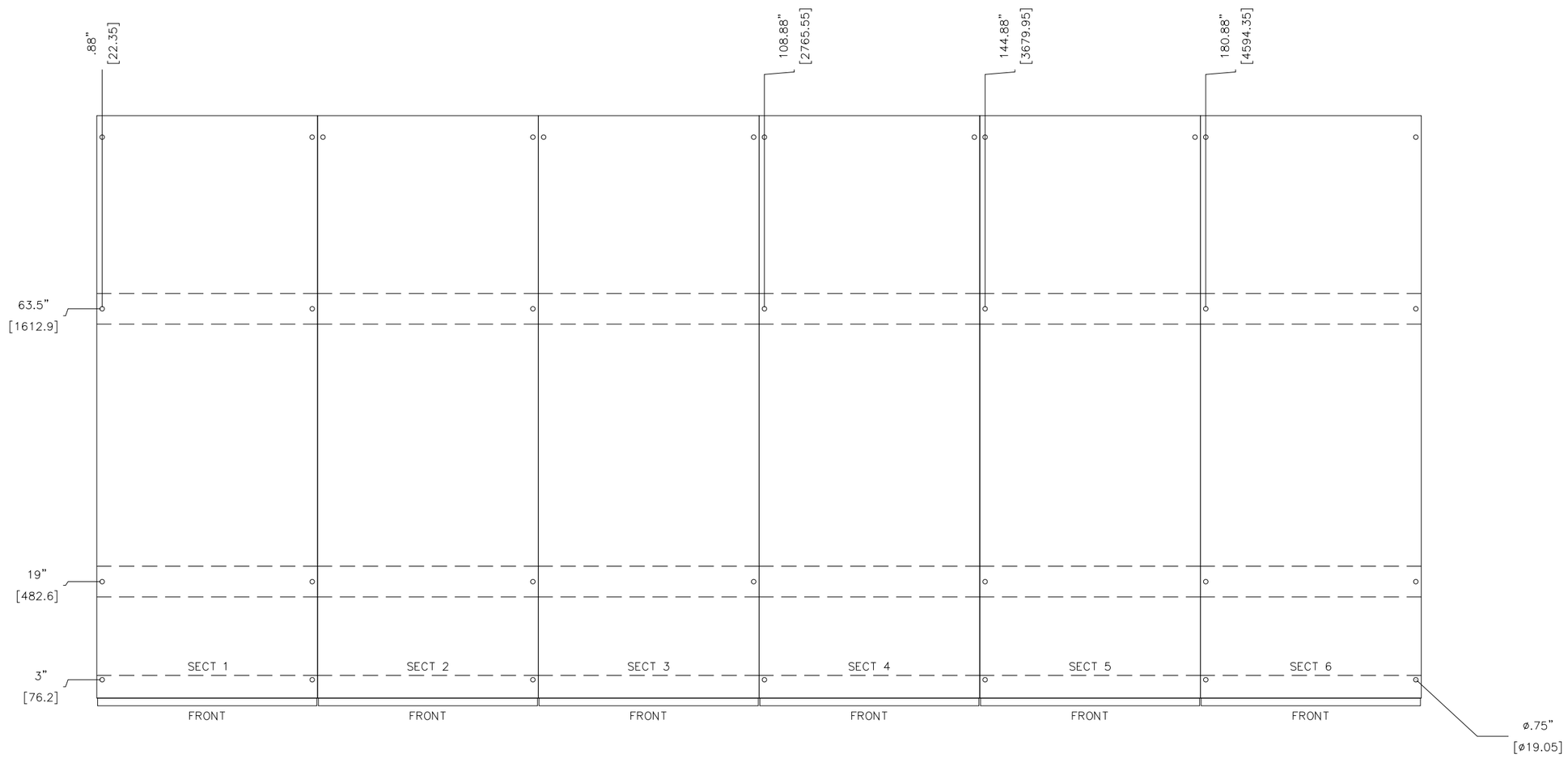

FLOOR PLAN VIEW
ANCHOR PLAN

DIMENSIONS – INCHES
[mm]

SUBMITTAL RELEASE
CATERPILLAR SWITCHGEAR AMERICA'S, LLC
CERTIFIED ENGINEERING OFFICIAL

CATERPILLAR®

PRODUCTION ENGINEER: Chealsea Canongo
APPLICATIONS ENGINEER: Brandon Darce

TITLE:
NOLAND WASTE WATER TREATMENT PLANT
ANCHOR PLAN–SWITCHGEAR
12.47kV UTILITY/GENERATOR PARALLELING SWITCHGEAR

NO.	REVISION	DATE
0.0	ISSUED FOR DESIGN REVIEW	08-06-2025
0.0	ISSUED FOR SUBMITTAL	08-25-25

APPROVED BY: Brandon Darce
APPROVED DATE: 08-22-2025
FILE NAME: 41659-G08

SCALE: N.T.S.
REV LEVEL: 0.0
DESIGNER: B.ASCHWANDEN
DATE CREATED: 08-21-2025
MODIFIED BY: Rohith KJ
MODIFIED DATE: 08-25-2025
SHEET NUMBER: 14 OF 38

G08

THIS DOCUMENT AND THE DETAILS EMBODIED THEREIN CONSTITUTE CONFIDENTIAL AND PROPRIETARY INFORMATION WHICH IS THE PROPERTY OF CATERPILLAR SWITCHGEAR AMERICA'S, LLC, 4855 MARCONI DRIVE, ALPHARETTA, GA, 30009, U.S.A., AND IS NOT TO BE USED OR REPRODUCED BY ANY PART EXCEPT AND TO THE EXTENT IN THE MANNER AUTHORIZED BY CATERPILLAR SWITCHGEAR AMERICAS, LLC

DIMENSIONS – INCHES / MM

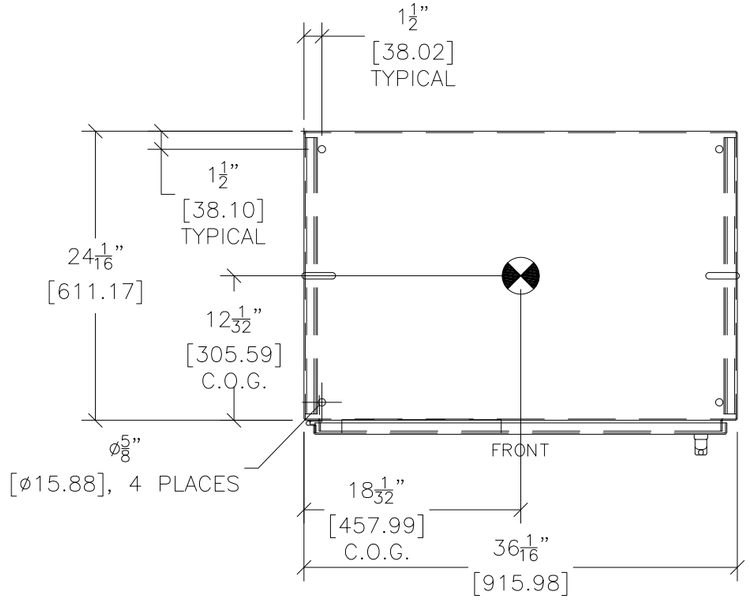

ANCHOR PLAN

TYPICAL FOR:
SECTs CP1–CP2

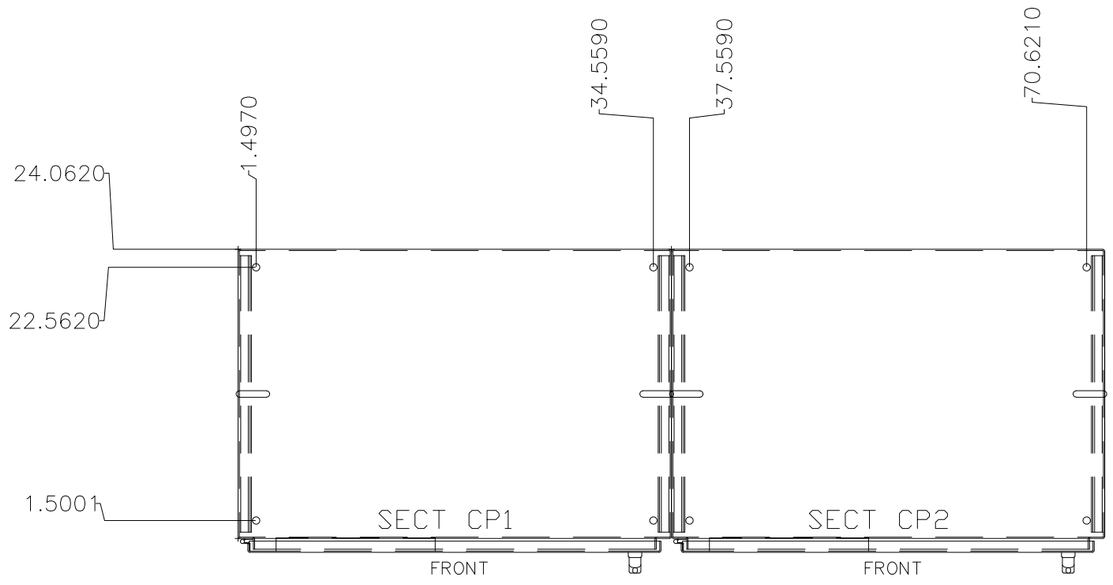

FLOOR PLAN VIEW - CONTROL PANELS

ANCHOR PLAN

SUBMITTAL RELEASE

CATERPILLAR®

NO.	REVISION	DATE
0.0	ISSUED FOR DESIGN REVIEW	08-06-2025
0.0	ISSUED FOR SUBMITTAL	08-25-25

TITLE: NOLAND WASTE WATER TREATMENT PLANT
ANCHOR PLAN–CONTROL PANELS
12.47kV UTILITY/GENERATOR PARALLELING SWITCHGEAR

PRODUCTION ENGINEER: Chealsea Canongo
APPLICATIONS ENGINEER: Brandon Darce

REV LEVEL: 0.0
DESIGNER: B.ASCHWANDEN
DATE CREATED: 08-21-2025
SHEET NUMBER: 15 OF 38
MODIFIED BY: Rohith KJ
MODIFIED DATE: 08-25-2025

APPROVED BY: Brandon Darce
APPROVED DATE: 08-22-2025
FILE NAME: 41659-G08A
SCALE: N.T.S.
G08A

THIS DOCUMENT AND THE DETAILS EMBODIED THEREIN CONSTITUTE CONFIDENTIAL AND PROPRIETARY INFORMATION WHICH IS THE PROPERTY OF CATERPILLAR SWITCHGEAR AMERICAS, LLC. 4855 MARCONI DRIVE, ALPHARETTA, GA, 30009, U.S.A., AND IS NOT TO BE USED OR REPRODUCED BY ANY PART EXCEPT AND TO THE EXTENT IN THE MANNER AUTHORIZED BY CATERPILLAR SWITCHGEAR AMERICAS, LLC

DIMENSIONS – INCHES / MM

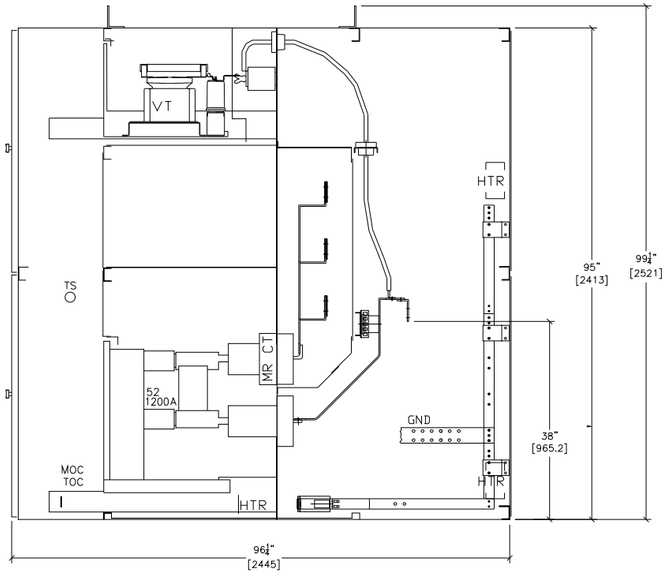

SIDE VIEW
SECT 1

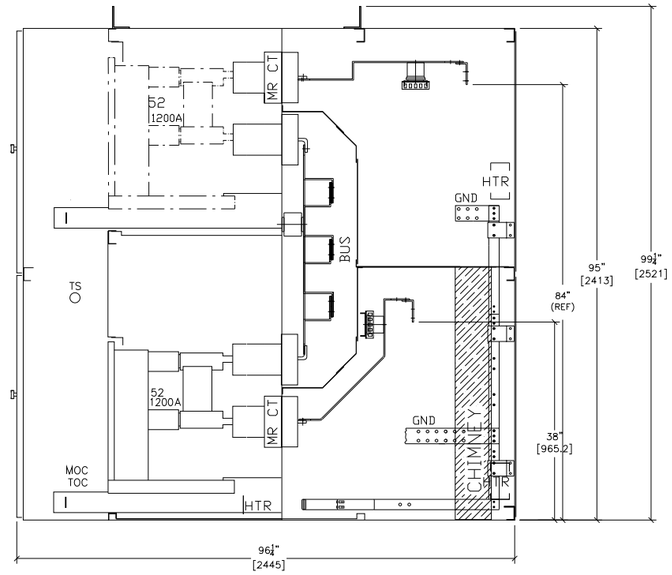

SIDE VIEW
SECT 2

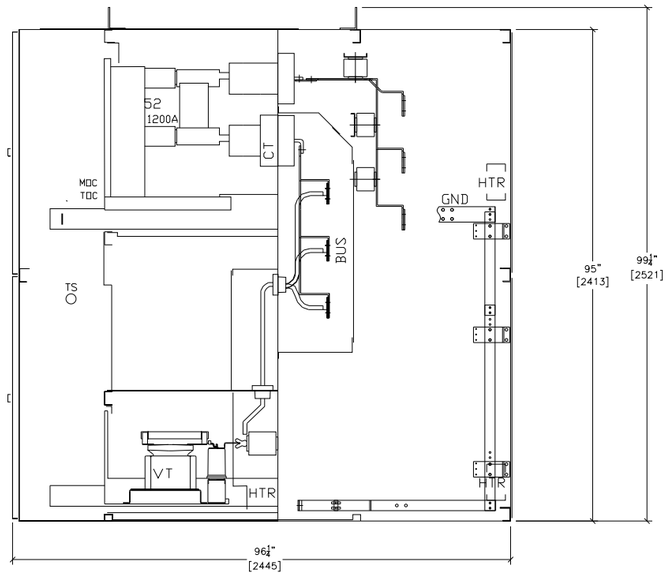

TYPICAL FOR:
SECT 3
SIDE VIEW

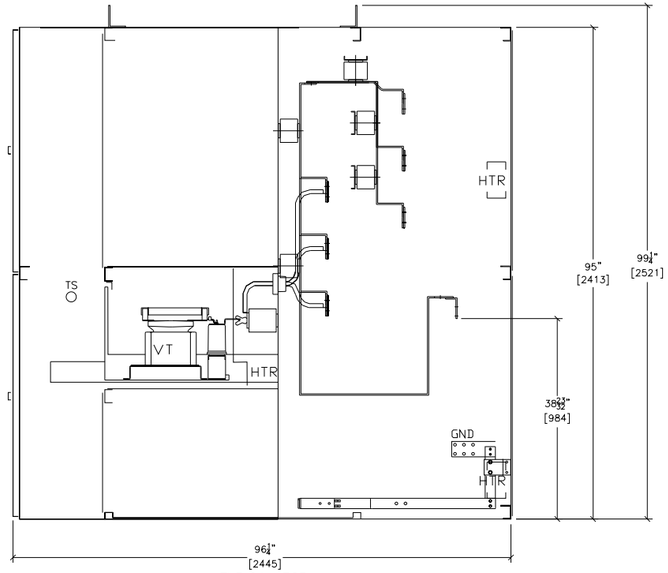

TYPICAL FOR:
SECT 4
SIDE VIEW

CATERPILLAR SWITCHGEAR AMERICAS, LLC
CERTIFIED ENGINEERING DOCUMENT
SUBMITTAL RELEASE

CATERPILLAR®

PRODUCTION ENGINEER: Chealsea Canonga
APPLICATIONS ENGINEER: Brandon Darce

TITLE:
NOLAND WASTE WATER TREATMENT PLANT
SIDE VIEWS-SWITCHGEAR
12.47kV UTILITY/GENERATOR PARALLELING SWITCHGEAR

NO.	REVISION	DATE
0.0	ISSUED FOR DESIGN REVIEW	08-06-2025
0.0	ISSUED FOR SUBMITTAL	08-25-25

APPROVED BY: Brandon Darce
APPROVED DATE: 08-22-2025
FILE NAME: 41659-G09

DESIGNER: B.ASCHWANDEN
DATE CREATED: 08-21-2025
SHEET NUMBER: 16 OF 38
MODIFIED BY: Rohith KJ
MODIFIED DATE: 08-25-2025
REV LEVEL: 0.0
SCALE: N.T.S.
G09

THIS DOCUMENT AND THE DETAILS EMBODIED THEREIN CONSTITUTE CONFIDENTIAL AND PROPRIETARY INFORMATION WHICH IS THE PROPERTY OF CATERPILLAR SWITCHGEAR AMERICAS, LLC. 4855 MARCONI DRIVE, ALPHARETTA, GA, 30009, U.S.A., AND IS NOT TO BE USED OR REPRODUCED BY ANY PART EXCEPT AND TO THE EXTENT IN THE MANNER AUTHORIZED BY CATERPILLAR SWITCHGEAR AMERICAS, LLC

DIMENSIONS – INCHES / MM

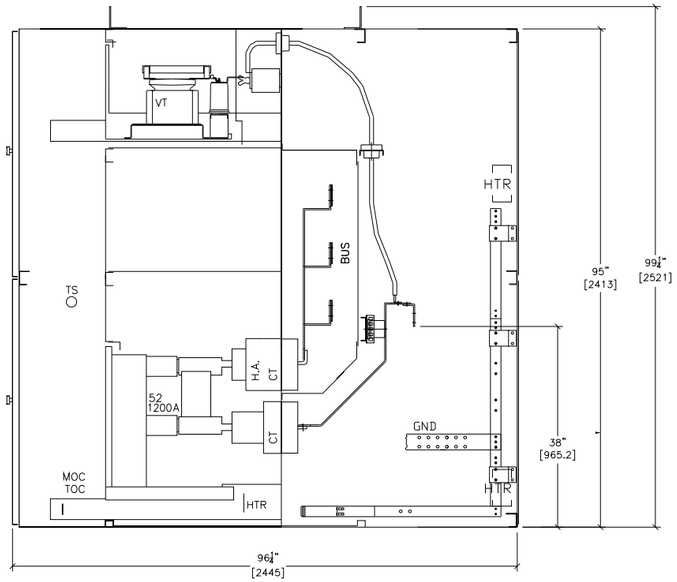

SIDE VIEW
SECT 5

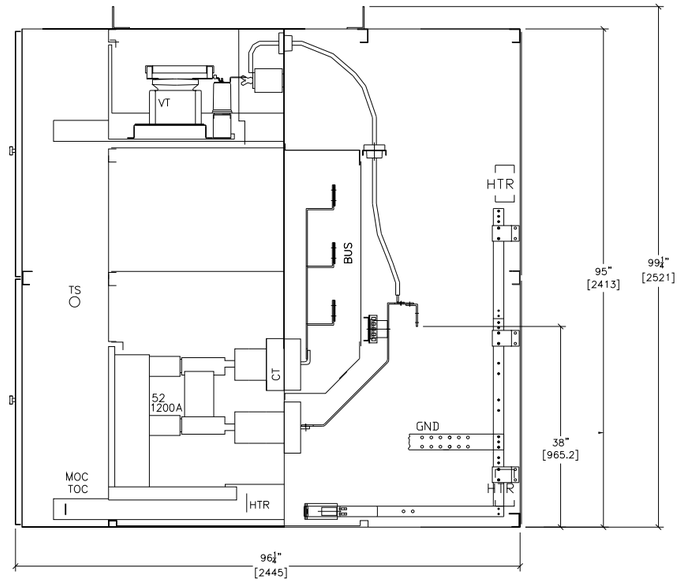

SIDE VIEW
SECT 6

SUBMITTAL RELEASE
CERTIFIED ENGINEERING DOCUMENT
CATERPILLAR SWITCHGEAR AMERICAS, LLC

CATERPILLAR®

PRODUCTION ENGINEER: Chealsea Canongo
APPLICATIONS ENGINEER: Brandon Darce

TITLE:
NOLAND WASTE WATER TREATMENT PLANT
SIDE VIEWS-SWITCHGEAR
12.47kV UTILITY/GENERATOR PARALLELING SWITCHGEAR

REV LEVEL:	DESIGNER:	MODIFIED BY:
0.0	B.ASCHWANDEN	Rohith KJ
DATE CREATED:	MODIFIED DATE:	
08-21-2025	08-25-2025	
SHEET NUMBER: 17 OF 38		

NO.	REVISION	DATE
0.0	ISSUED FOR DESIGN REVIEW	08-06-2025
0.0	ISSUED FOR SUBMITTAL	08-25-25

APPROVED BY: Brandon Darce
APPROVED DATE: 08-22-2025
SCALE: N.T.S.
G09A
FILE NAME: 41659-G09A

THIS DOCUMENT AND THE DETAILS EMBODIED THEREIN CONSTITUTE CONFIDENTIAL AND PROPRIETARY INFORMATION WHICH IS THE PROPERTY OF CATERPILLAR SWITCHGEAR AMERICAS, LLC. 4855 MARCONI DRIVE, ALPHARETTA, GA, 30009, U.S.A., AND IS NOT TO BE USED OR REPRODUCED BY ANY PART EXCEPT AND TO THE EXTENT IN THE MANNER AUTHORIZED BY CATERPILLAR SWITCHGEAR AMERICAS, LLC

LINE LEGEND

CABLE
BUS
CURRENT
VOLTAGE
CONTROL

SUPPLIED BY OTHERS
SUPPLIED BY DEALER

CONTROL ONE-LINE
PARALLELING SWITCHGEAR

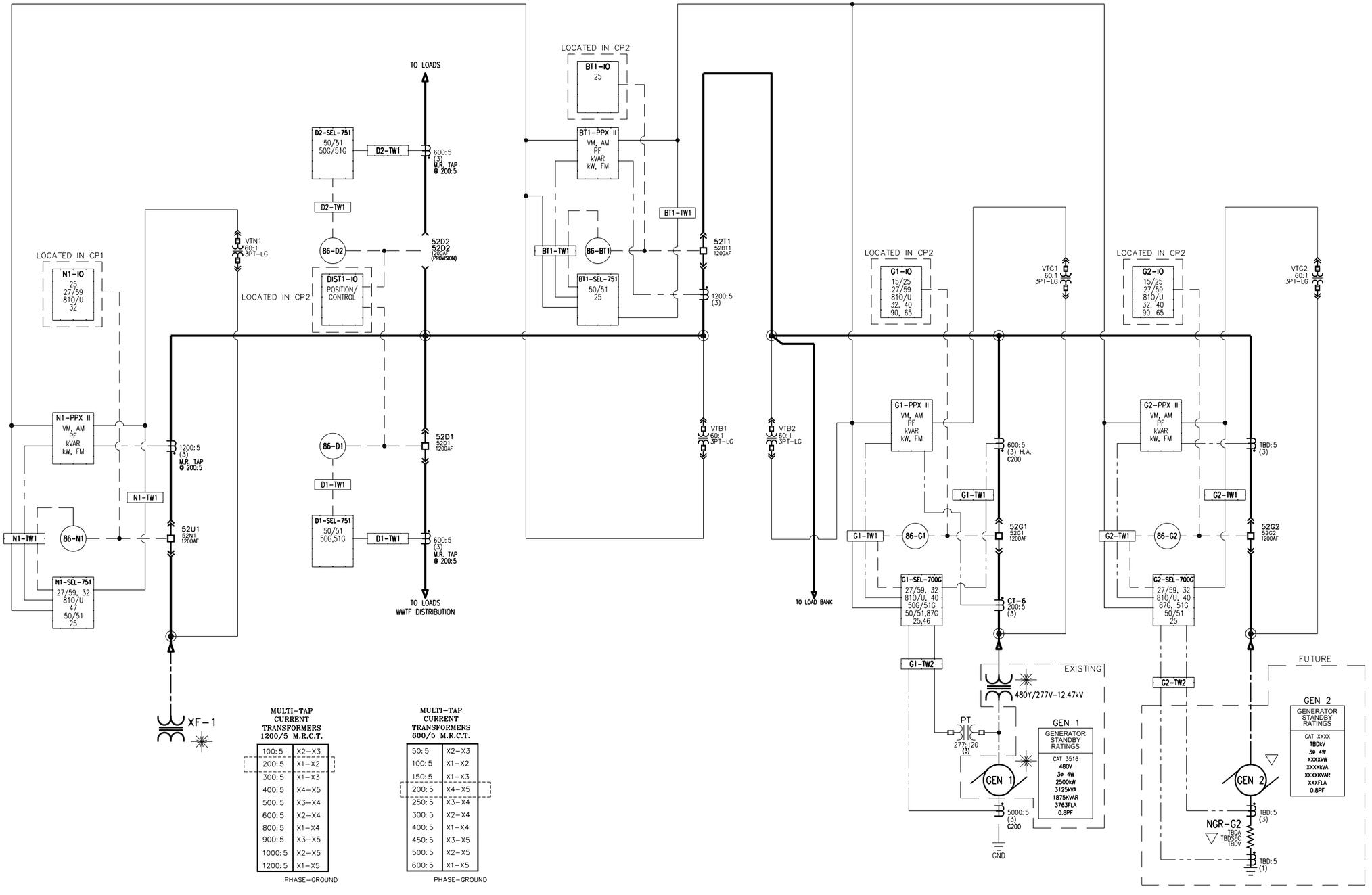

MULTI-TAP CURRENT TRANSFORMERS 1200/5 M.R.C.T.

100:5	X2-X3
200:5	X1-X2
300:5	X1-X3
400:5	X4-X5
500:5	X3-X4
600:5	X2-X4
800:5	X1-X4
900:5	X3-X5
1000:5	X2-X5
1200:5	X1-X5

PHASE-GROUND

MULTI-TAP CURRENT TRANSFORMERS 600/5 M.R.C.T.

50:5	X2-X3
100:5	X1-X2
150:5	X1-X3
200:5	X4-X5
250:5	X3-X4
300:5	X2-X4
400:5	X1-X4
450:5	X3-X5
500:5	X2-X5
600:5	X1-X5

PHASE-GROUND

SUBMITTAL RELEASE

CATERPILLAR SWITCHGEAR AMERICA'S, LLC CERTIFIED ENGINEERING DOCUMENT

CATERPILLAR®

PRODUCTION ENGINEER: Chealsea Canonga
APPLICATIONS ENGINEER: Brandon Darce

TITLE:
NOLAND WASTE WATER TREATMENT PLANT
CIRCUIT BREAKER CONTROL ONE-LINE
12.47kV UTILITY/GENERATOR PARALLELING SWITCHGEAR

REV LEVEL:	0.0
DESIGNER:	B.ASCHWANDEN
MODIFIED BY:	Rohith KJ
DATE CREATED:	08-21-2025
MODIFIED DATE:	08-25-2025
SHEET NUMBER:	18 OF 38
SCALE:	N.T.S.
APPROVED BY:	Brandon Darce
APPROVED DATE:	08-22-2025
FILE NAME:	41659-G10

G10

NO.	REVISION	DATE
0.0	ISSUED FOR DESIGN REVIEW	08-06-2025
0.0	ISSUED FOR SUBMITTAL	08-25-25

THIS DOCUMENT AND THE DETAILS EMBODIED THEREIN CONSTITUTE CONFIDENTIAL AND PROPRIETARY INFORMATION WHICH IS THE PROPERTY OF CATERPILLAR SWITCHGEAR AMERICAS, LLC. 4855 MARCON DRIVE, ALPHARETTA, GA, 30005, U.S.A., AND IS NOT TO BE USED OR REPRODUCED BY ANY PART EXCEPT AND TO THE EXTENT IN THE MANNER AUTHORIZED BY CATERPILLAR SWITCHGEAR AMERICAS, LLC

SUPPLIED BY OTHERS

SUPPLIED BY DEALER

LINE LEGEND

— — — FIELD INSTALLED CABLE

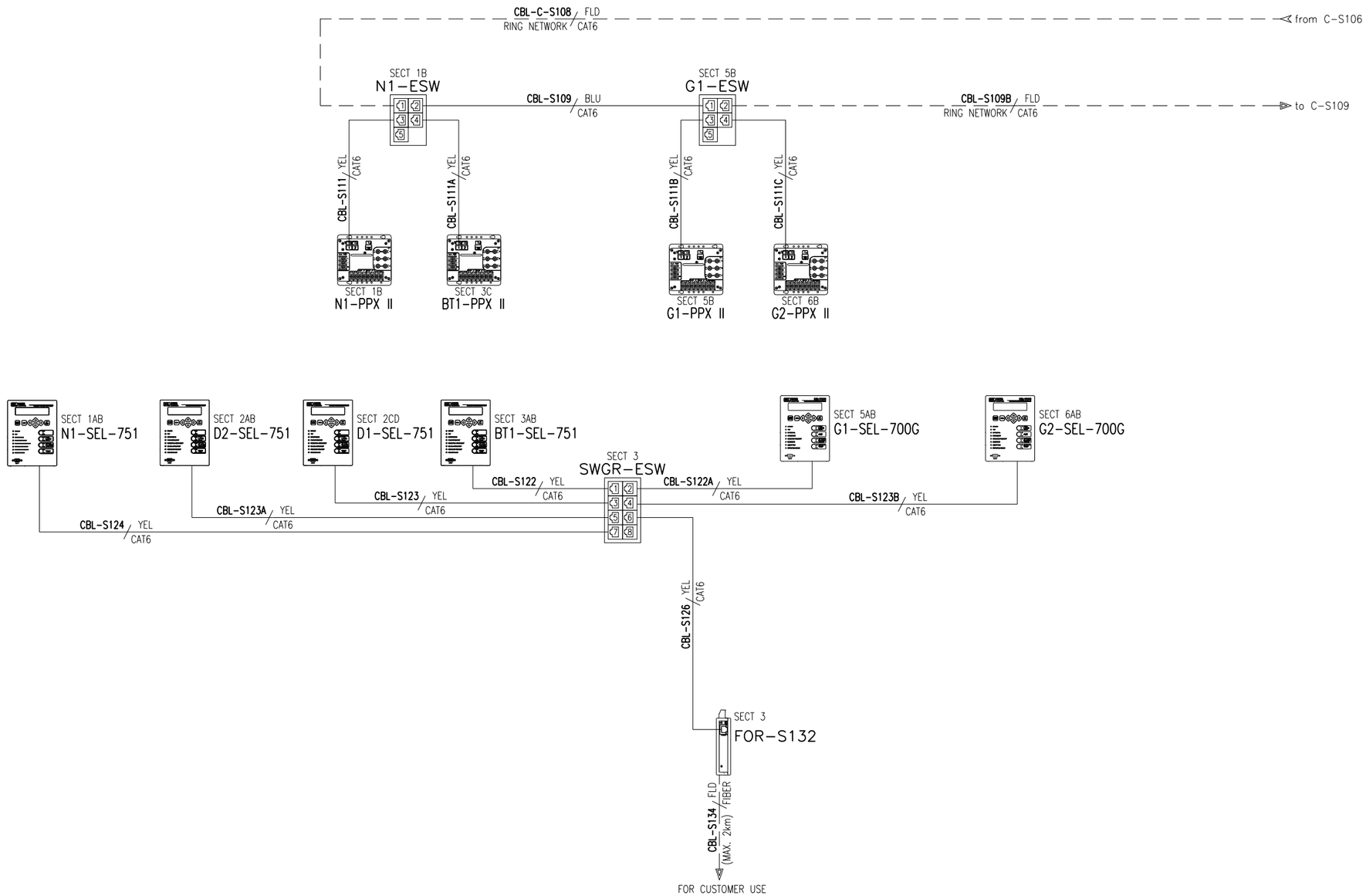

SUBMITTAL RELEASE

CATERPILLAR SWITCHGEAR AMERICA'S, LLC
CERTIFIED ENGINEERING OFFICIAL

CATERPILLAR®

PRODUCTION ENGINEER: Chealsea Canongo
APPLICATIONS ENGINEER: Brandon Darce

TITLE:
NOLAND WASTE WATER TREATMENT PLANT
AUTOMATION COMMUNICATIONS PLAN-SWITCHGEAR
12.47kV UTILITY/GENERATOR PARALLELING SWITCHGEAR

NO.	REVISION	DATE
0.0	ISSUED FOR DESIGN REVIEW	08-06-2025
0.0	ISSUED FOR SUBMITTAL	08-25-25

DESIGNER: B.ASCHWANDEN
DATE CREATED: 08-21-2025
REV LEVEL: 0.0
MODIFIED BY: Rohith KJ
MODIFIED DATE: 08-25-2025
SHEET NUMBER: 19 OF 38

APPROVED BY: Brandon Darce
APPROVED DATE: 08-22-2025
SCALE: N.T.S.
FILE NAME: 41659-G11
G11

THIS DOCUMENT AND THE DETAILS EMBODIED THEREIN CONSTITUTE CONFIDENTIAL AND PROPRIETARY INFORMATION WHICH IS THE PROPERTY OF CATERPILLAR SWITCHGEAR AMERICAS, LLC. 4855 MARCONI DRIVE, ALPHARETTA, GA, 30009, U.S.A., AND IS NOT TO BE USED OR REPRODUCED BY ANY PART EXCEPT AND TO THE EXTENT IN THE MANNER AUTHORIZED BY CATERPILLAR SWITCHGEAR AMERICAS, LLC

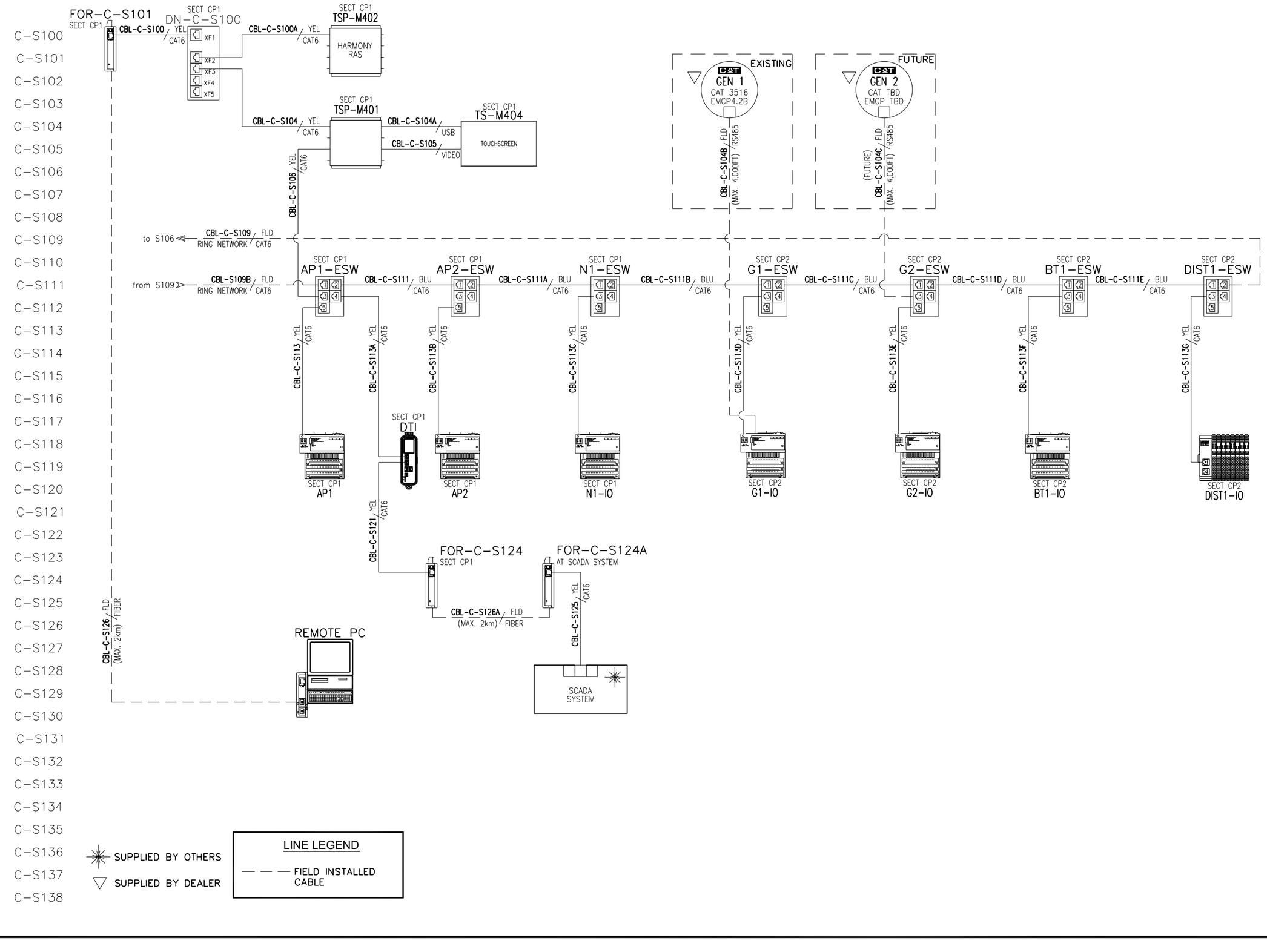

CATERPILLAR SWITCHGEAR AMERICA, LLC
SUBMITTAL RELEASE
CERTIFIED ENGINEERING DRAWING
CATERPILLAR®

PRODUCTION ENGINEER: Chealsea Canonga
APPLICATIONS ENGINEER: Brandon Darce

TITLE:
NOLAND WASTE WATER TREATMENT PLANT
AUTOMATION COMMUNICATIONS PLAN-CONTROL PANEL
12.47kV UTILITY/GENERATOR PARALLELING SWITCHGEAR

SCALE:	REV LEVEL:	DESIGNER:	MODIFIED BY:
N.T.S.	0.0	B.ASCHWANDEN	Rohith KJ
DATE CREATED:		MODIFIED DATE:	
08-21-2025		08-25-2025	
SHEET NUMBER:	20 OF 38		

G11A

NO.	REVISION	DATE
0.0	ISSUED FOR DESIGN REVIEW	08-06-2025
0.0	ISSUED FOR SUBMITTAL	08-25-25

APPROVED BY: Brandon Darce
APPROVED DATE: 08-22-2025
FILE NAME: 41659-G11A

THIS DOCUMENT AND THE DETAILS EMBODIED THEREIN CONSTITUTE CONFIDENTIAL AND PROPRIETARY INFORMATION WHICH IS THE PROPERTY OF CATERPILLAR SWITCHGEAR AMERICA, LLC, 4866 MARCONI DRIVE, ALPHARETTA, GA, 30009, U.S.A., AND IS NOT TO BE USED OR REPRODUCED BY ANY PART EXCEPT AND TO THE EXTENT IN THE MANNER AUTHORIZED BY CATERPILLAR SWITCHGEAR AMERICA, LLC

CONTROL CIRCUIT CONDUIT SCHEDULE (SEE NOTE 1)

CONDUIT			CONDUCTOR		CONDUIT	
NO.	FROM	TO	QTY-SIZE	FUNCTION	SIZE	TABLE
1	GEN 1	SECT CP2	1 - 2 COND. #18 SHIELDED TWISTED PAIR, BELDEN 3073F OR EQUIVALENT	GEN 1 EMCP4.2B (DATA LINK)	NOTE 4 & 5	TYPE D, NOTE 6
			1 - 3 COND. #16 SHIELDED TWISTED TRIPLET, BELDEN 8618 OR EQUIVALENT	GEN 1 PWM (SPEED BRICK)		
			1 - 2 COND. #16 SHIELDED TWISTED PAIR, BELDEN 8719 OR EQUIVALENT	GEN 1 CDVR (ANALOG VOLTAGE CONTROL)		
			3 - #14 AWG	GEN 1 CDVR (MANUAL VOLTAGE CONTROL)	NOTE 4 & 5	TYPE A
			4 - #10 AWG	24VDC POWER		
			15 - #14 AWG	GEN 1 DISCRETE		
2	GEN 1	SECT CP2	3 - #14 AWG	GEN 1 START COMMAND	NOTE 5 & 12	TYPE A
3	GEN 1	SECT 5	12 - #10 AWG	GEN 1 CT SIGNALS FOR DIFFERENTIAL PROTECTION	NOTE 5	TYPE C
4	GEN 1	SECT 5	4 - #10 AWG	GEN 1 PT SIGNALS	NOTE 5	TYPE C
5	GEN 2 (FUTURE)	SECT CP2	1 - CAT 6++ BELDEN 3632/3633 (FUTURE -TBD)	GEN 2 EMCP4.3 (DATA LINK) (FUTURE -TBD)	NOTE 4 & 5	TYPE D, NOTE 6
			1 - 3 COND. #16 SHIELDED TWISTED TRIPLET, BELDEN 8618 OR EQUIVALENT (FUTURE -TBD)	GEN 2 ADEM A4 (SPEED BRICK) (FUTURE -TBD)		
			1 - 2 COND. #16 SHIELDED TWISTED PAIR, BELDEN 8719 OR EQUIVALENT (FUTURE -TBD)	GEN 2 CDVR (ANALOG VOLTAGE CONTROL) (FUTURE -TBD)		
			3 - #14 AWG (FUTURE -TBD)	GEN 2 CDVR (MANUAL VOLTAGE CONTROL) (FUTURE -TBD)	NOTE 4 & 5	TYPE A
			4 - #10 AWG (FUTURE)	24VDC POWER (FUTURE)		
			15 - #14 AWG (FUTURE)	GEN 2 DISCRETE (FUTURE)		
6	GEN 2 (FUTURE)	SECT CP2	3 - #14 AWG (FUTURE)	GEN 2 START COMMAND (FUTURE)	NOTE 5 & 12	TYPE A
7	GEN 2 NGR (FUTURE)	SECT 6	2 - #10 AWG (FUTURE - TBD)	GEN 2 GROUND CT SIGNAL (FUTURE -TBD)	NOTE 5	TYPE C
8	GEN 2 (FUTURE)	SECT 6	12 - #10 AWG (FUTURE)	GEN 2 CT SIGNALS FOR DIFFERENTIAL PROTECTION (FUTURE)	NOTE 4 & 5	TYPE C
			4 - #14 AWG (FUTURE)	GEN 2 EMCP VT SIGNAL (FUTURE)		
			6 - #10 AWG (FUTURE)	GEN 2 EMCP CT SIGNAL (FUTURE)		
9	SECT 1	SECT C P1	14 - #14 AWG	52U1 (52N1) BREAKER 24VDC DISCRETE CONTROL SIGNALS	NOTE 5	TYPE A
10	SECT 1	SECT C P1	3 - #14 AWG	52U1 (52N1) BREAKER 125VDC CLOSE/TRIP SIGNALS	NOTE 5	TYPE B
11	SECT 2	SECT C P2	20 - #14 AWG	52D1, 52D2 (FUTURE) BREAKERS 24VDC DISCRETE CONTROL SIGNALS	NOTE 5	TYPE A
12	SECT 2	SECT C P2	6 - #14 AWG	52D1, 52D2 (FUTURE) BREAKERS 125VDC CLOSE/TRIP SIGNALS	NOTE 5	TYPE B
13	SECT 3	SECT C P2	10 - #14 AWG	52T1 (52BT1) BREAKER 24VDC DISCRETE CONTROL SIGNALS	NOTE 5	TYPE A
14	SECT 3	SECT C P2	3 - #14 AWG	52T1 (52BT1) BREAKER 125VDC CLOSE/TRIP SIGNALS	NOTE 5	TYPE B
15	SECT 5	SECT C P2	10 - #14 AWG	52G1 BREAKER 24VDC DISCRETE CONTROL SIGNALS	NOTE 5	TYPE A
16	SECT 5	SECT C P2	3 - #14 AWG	52G1 BREAKER 125VDC CLOSE/TRIP SIGNALS	NOTE 5	TYPE B
17	SECT 6	SECT C P2	10 - #14 AWG	52G2 BREAKER 24VDC DISCRETE CONTROL SIGNALS	NOTE 5	TYPE A
18	SECT 6	SECT C P2	3 - #14 AWG	52G2 BREAKER 125VDC CLOSE/TRIP SIGNALS	NOTE 5	TYPE B
19	SECT 5	SECT CP1	1 - CAT 6++ BELDEN 3632/3633	N1-PPX II, BT1-PPX II, G1-PPX II, G2-PPX II COMMUNICATION	NOTE 5	TYPE D
20	SECT CP1	SECT 1	1 - CAT 6++ BELDEN 3632/3633	N1-PPX II, BT1-PPX II, G1-PPX II, G2-PPX II COMMUNICATION	NOTE 5	TYPE D
21	SECT 3	FOR CUSTOMER USE	1 - FIBER OPTIC MULTIMODE CABLE(MINIMUM F-G 62.5/125 2.6 dB/km F600) SC-CONNECTORS	PROTECTIVE RELAYS COMMUNICATION	NOTE 5	TYPE E
22	SECT CP1	SCADA SYSTEM	1 - FIBER OPTIC MULTIMODE CABLE(MINIMUM F-G 62.5/125 2.6 dB/km F600) SC-CONNECTORS	DATA TABLE INTERFACE	NOTE 5	TYPE E
23	SECT CP1	REMOTE PC	1 - FIBER OPTIC MULTIMODE CABLE(MINIMUM F-G 62.5/125 2.6 dB/km F600) SC-CONNECTORS	REMOTE PC COMMUNICATIONS	NOTE 5	TYPE E
24	EMERGENCY POWER PANEL	SECT 1	2 - #10 AWG	120VAC FOR SPACE HEATERS (1Ø, 20A)	NOTE 5	TYPE C
25	EMERGENCY POWER PANEL	SECT 3	2 - #10 AWG	120VAC FOR SPACE HEATERS (1Ø, 20A)	NOTE 5	TYPE C
26	EMERGENCY POWER PANEL	SECT 5	2 - #10 AWG	120VAC FOR SPACE HEATERS (1Ø, 20A)	NOTE 5	TYPE C
27	EMERGENCY POWER PANEL	125V DC BATTERY CHARGER	3 - #10 AWG	120VAC FOR 125V DC BATTERY CHARGER (1Ø, 12A)	NOTE 5	TYPE C
28	125V DC BATTERY CHARGER	125V DC BATTERIES	2 - #10 AWG	125V DC POWER	NOTE 5	TYPE B
29	125V DC BATTERIES	SECT 1	2 - #10 AWG	125V DC POWER	NOTE 5	TYPE B
30	125V DC BATTERIES	SECT 3	2 - #10 AWG	125V DC POWER	NOTE 5	TYPE B
31	125V DC BATTERIES	SECT 5	2 - #10 AWG	125V DC POWER	NOTE 5	TYPE B
32	125V DC BATTERIES	SECT CP1	2 - #10 AWG	125V DC POWER	NOTE 5	TYPE B
33	125V DC BATTERY CHARGER	SECT CP1	2 - #14 AWG	125V DC BATTERY CHARGER FAILURE	NOTE 5	TYPE A
34	SECT CP1	SECT 1	2 - #10 AWG	24V DC POWER	NOTE 5	TYPE A
35	3RD PARTY GRID OPERATOR	SECT CP1	2 - #12 AWG	DISCRETE SIGNAL (INITIATES THE SEQUENCE TO REMOVE NOLAND WWTF FROM THE OZARKS ELECTRIC GRID DURING PEAK DEMAND)	NOTE 5	TYPE A
36	SECT 1	LOAD BANK	2 - #14 AWG	LOAD BANK DUMP SIGNAL	NOTE 5	TYPE A
37	EMERGENCY POWER PANEL	SECT CP1	2 - #10 AWG	120VAC POWER TO AC UNIT	NOTE 5	TYPE C
38	EMERGENCY POWER PANEL	SECT CP2	2 - #10 AWG	120VAC POWER TO AC UNIT	NOTE 5	TYPE C

NOT FOR CONSTRUCTION
NOT FOR CONSTRUCTION

NOTES:

1) ELECTRICAL CONTRACTOR RESPONSIBLE FOR ADHERENCE TO ALL APPLICABLE STANDARDS AND CODES.
2) ELECTRICAL CONTRACTOR MAY MODIFY ROUTING AND COMBINE CONDUITS OF THE SAME TYPE.
3) ELECTRICAL CONTRACTOR TO TERMINATE FIELD WIRING AT BOTH ENDS.
4) CONDUIT TYPES A AND D MAY BE COMBINED.
5) CONDUIT TO BE SIZED BY INSTALLER.
6) SEPARATE METALLIC CONDUIT MUST BE USED FOR EACH WIRE TYPE (A, B, C, & D). WIRE TYPES A & D MAY BE COMBINED IN THE SAME METALLIC CONDUIT.
7) SPARES TO BE LEFT 10' LONG, COILED AND TAPED IN BOTTOM OF ENCLOSURE.
8) ELECTRICAL CONTRACTOR TO PROVIDE 20% SPARES.
9) ALL CONTROL WIRING TO BE STRANDED 90°C COPPER UNLESS SPECIFIED OTHERWISE.
10) ALL WIRING TO BE 600V INSULATED.
11) DETAILED FIELD INTERCONNECT POINTS ARE PROVIDED IN THE FIELD INTERCONNECT (F) DRAWINGS.
12) PER NEC THIS MUST BE A DEDICATED CONDUIT AND CANNOT BE COMBINED WITH OTHER WIRING.

CONDUIT TABLE	
A	DC CONTROL <= 30V
B	DC CONTROL > 30V
C	AC CONTROL
D	SIGNAL LEVEL
E	FIBER OPTIC

SUBMITTAL RELEASE
CERTIFIED ENGINEERING OFFICIAL
CATERPILLAR SWITCHGEAR AMERICAS, LLC

CATERPILLAR®

PRODUCTION ENGINEER: Chealsea Canonga
APPLICATIONS ENGINEER: Brandon Darce

TITLE: NOLAND WASTE WATER TREATMENT PLANT
CONTROL CONDUIT SCHEDULE
12.47kV UTILITY/GENERATOR PARALLELING SWITCHGEAR

DESIGNED BY: B.ASCHWANDEN
MODIFIED BY: Rohith KJ
DATE CREATED: 08-21-2025
MODIFIED DATE: 08-25-2025
SHEET NUMBER: 21 OF 38
REV LEVEL: 0.0
SCALE: N.T.S.
APPROVED BY: Brandon Darce
APPROVED DATE: 08-22-2025
FILE NAME: 41659-G12
G12

NO.	REVISION	DATE
0.0	ISSUED FOR DESIGN REVIEW	08-06-2025
0.0	ISSUED FOR SUBMITTAL	08-25-25

THIS DOCUMENT AND THE DETAILS EMBODIED THEREIN CONSTITUTE CONFIDENTIAL AND PROPRIETARY INFORMATION WHICH IS THE PROPERTY OF CATERPILLAR SWITCHGEAR AMERICAS, LLC, 4866 MARCONI DRIVE, ALPHARETTA, GA, 30009, U.S.A., AND IS NOT TO BE USED OR REPRODUCED BY ANY PART EXCEPT AND TO THE EXTENT IN THE MANNER AUTHORIZED BY CATERPILLAR SWITCHGEAR AMERICAS, LLC

Note: Sequence of Operations will be shown in Submittal Package.

NO.	REVISION	DATE
0.0	ISSUED FOR DESIGN REVIEW	08-06-2025
0.0	ISSUED FOR SUBMITTAL	08-25-25

TITLE:

NOLAND WASTE WATER TREATMENT PLANT

SEQUENCE OF OPERATIONS

12.47kV UTILITY/GENERATOR PARALLELING SWITCHGEAR

APPROVED BY: Brandon Darce	SCALE: N.T.S.	REV LEVEL: 0.0	DESIGNER: B.ASCHWANDEN	MODIFIED BY: Rohith KJ	
APPROVED DATE: 08-22-2025	G13		DATE CREATED: 08-21-2025	MODIFIED DATE: 08-25-2025	
FILE NAME: 41659-G13			SHEET NUMBER: 22 OF 38		

PRODUCTION ENGINEER: Chealsea Canongo

APPLICATIONS ENGINEER: Brandon Darce

CATERPILLAR®

CERTIFIED ENGINEERING ORIGINAL — CATERPILLAR SWITCHGEAR AMERICA'S, LLC — SUBMITTAL RELEASE

THIS DOCUMENT AND THE DETAILS EMBODIED THEREIN CONSTITUTE CONFIDENTIAL AND PROPRIETARY INFORMATION WHICH IS THE PROPERTY OF CATERPILLAR SWITCHGEAR AMERICA'S, LLC, 4955 MARCONI DRIVE, ALPHARETTA, GA., 30005, U.S.A., AND IS NOT TO BE USED OR REPRODUCED BY ANY PART EXCEPT AND TO THE EXTENT IN THE MANNER AUTHORIZED BY CATERPILLAR SWITCHGEAR AMERICAS, LLC

SWITCHGEAR

Caterpillar: Confidential Green

Instruction Booklet **IB02200001E** Effective May 2018 Revision #4

Instructions for installation, operation, and maintenance of 5/15 kV type VacClad-W metal-clad switchgear indoor housings

Contents

Description	Page
Introduction	4
Installing indoor switchgear	5
Description of VacClad-W switchgear	10
Adjusting and testing	16
Operation of the system	16
Inspection and maintenance	17
Lubrication	19
Renewal parts	20
Accessories	20
Metal-clad switchgear field taping procedure (5/15 kV)	23

Powering Business Worldwide

Instruction Booklet IB02200001E
Effective May 2018
Revision #4

Instructions for installation, operation, and maintenance of 5/15 kV type VacClad-W metal-clad switchgear indoor housings

Instructions for installation, operation, and maintenance of 5/15 kV type VacClad-W metal-clad switchgear indoor housings

Instruction Booklet IB02200001E
Effective May 2018
Revision #4

Disclaimer of warranties and limitation of liability

This instruction booklet is published solely for information purposes and should not be considered all-inclusive. If further information is required, you should consult an authorized Eaton sales representative.

The sale of the product shown in this literature is subject to the terms and conditions outlined in appropriate Eaton selling policies or other contractual agreement between the parties. This literature is not intended to and does not enlarge or add to any such contract. The sole source governing the rights and remedies of any purchaser of this equipment is the contract between the purchaser and Eaton.

NO WARRANTIES, EXPRESSED OR IMPLIED, INCLUDING WARRANTIES OF FITNESS FOR A PARTICULAR PURPOSE OR MERCHANTABILITY, OR WARRANTIES ARISING FROM THE COURSE OF DEALING OR USAGE OF TRADE, ARE MADE REGARDING THE INFORMATION, RECOMMENDATIONS, AND DESCRIPTIONS CONTAINED HEREIN.

In no event will Eaton be responsible to the purchaser or user in contract, in tort (including negligence), strict liability or otherwise for any special, indirect, incidental or consequential damage or loss whatsoever, including but not limited to damage or loss of use of equipment, plant or power system, cost of capital, loss of power, additional expenses in the use of existing power facilities, or claims against the purchaser or user by its customers resulting from the use of the information, recommendations and description contained herein.

.

Instruction Booklet IB02200001E
Effective May 2018
Revision #4

Read and understand these instructions before attempting installation, operation, or maintenance of this equipment. This equipment must be installed and serviced only by qualified electrical personnel. Retain this document for future use.

⚠ WARNING

HAZARD OF ELECTRICAL SHOCK OR BURN. OPERATING THE SWITCHGEAR ASSEMBLY OUTSIDE OF ITS RATINGS MAY CAUSE FAILURE RESULTING IN PROPERTY DAMAGE, SEVERE PERSONAL INJURY, OR DEATH. THE SWITCHGEAR ASSEMBLY MUST BE OPERATED WITHIN ITS NAMEPLATE RATINGS.

⚠ WARNING

HAZARDS OF ARC FLASH, ARC BLAST, AND ELECTRIC SHOCK EXIST WHEN THIS EQUIPMENT IS ENERGIZED, WHICH MAY LEAD TO DEATH OR SEVERE INJURY.

ALL WORK ASSOCIATED WITH THIS ELECTRICAL EQUIPMENT MUST BE PERFORMED ONLY BY QUALIFIED PERSONNEL AS DEFINED IN NFPA-70. CONSULT NFPA-70E, OSHA, AND ANY OTHER APPLICABLE REGULATION PERTAINING TO OPERATOR SAFETY PRIOR TO SERVICING EQUIPMENT. THE QUALIFIED PERSONNEL MUST FOLLOW ALL APPLICABLE PERSONAL PROTECTIVE EQUIPMENT REQUIREMENTS.

DO NOT ATTEMPT ANY WORK ON THIS EQUIPMENT SUCH AS INSTALLING COMPONENTS, PERFORMING ANY EXAMINATIONS, PERFORMING ANY ADJUSTMENTS, PERFORMING ANY SERVICING, OR PERFORMING ANY MAINTENANCE WHILE IT IS ENERGIZED. BEFORE PERFORMING ANY WORK, FOLLOW ALL APPROPRIATE HAZARD ASSESSMENT AND ENERGY CONTROL PRECAUTIONS AND PROCEDURES.

VERIFY NO VOLTAGES ARE PRESENT ON ALL INCOMING AND OUTGOING CONDUCTORS, AND ANY ENERGY SOURCES CONTAINED WITHIN THE EQUIPMENT PRIOR TO SERVICING, THEN GROUND (CONNECT TO EARTH) ALL INCOMING AND OUTGOING CONDUCTORS ATTACHED TO THIS EQUIPMENT AND TO ANY INTERNAL ENERGY SOURCES.

⚠ DANGER

ALL APPLICABLE SAFETY CODES, SAFETY STANDARDS, AND SAFETY REGULATIONS MUST BE ADHERED TO WHEN INSTALLING, OPERATING, OR MAINTAINING THIS EQUIPMENT.

Instructions for installation, operation, and maintenance of 5/15 kV type VacClad-W metal-clad switchgear indoor housings

Section 1: Introduction

1.1 Purpose

This instruction bulletin covers the installation, operation, and maintenance of a 5/15 kV Type VacClad-W Metal-clad switchgear indoor housing assembly. It is not encompassing of all possible contingencies, variations, and details that may arise during installation, operation, or maintenance of this equipment.

1.2 Application and description

An Eaton 5/15 kV Type VacClad-W Metal-clad switchgear indoor housing assembly provides centralized control and protection of medium voltage power equipment and circuits in industrial, commercial, and utility installations involving generators, motors, and feeder circuits. Several built-in interlocks and safety features are provided.

The construction of the 5/15 kV type VacClad-W metal-clad switchgear allows for the placement of circuit breakers in the upper or lower positions. Breakers may be constructed as direct roll-in breakers or non-direct roll-in breakers. The design of the VCP-W direct roll-in breaker is constructed by adding a wheel kit to the standard VCP-W breaker. The upper position can be populated with any combination of auxiliary/auxiliary or a direct roll-in breaker. It is also possible to have up to four auxiliary modules in any one vertical section. The auxiliary modules can be a drawout VT, drawout CPT, or drawout fuse assembly.

If a lineup of switchgear is supplied with direct roll-in circuit breakers, both the upper and lower circuit breakers are supplied with direct roll-in wheel kits.

1.3 Documentation reference

For receiving, handling, storing and installation instructions: IB022014EN.

For VCP-W breaker: IB131006EN.

For switchgear mounting to a foundation: Job Floor plan Document.

For breaker lifting device: IB02100002E.

For sample Ground and Test Device: Refer to the document received with the device.

For AMPGARD medium voltage motor control centers: IB48076.

Refer to the customer drawing package for order specific information.

For further information on installation and application, refer to the applicable descriptive bulletins and/or industry standards publications. Download Eaton electronic information from www.eaton.com.

1.4 Eaton contact information

For additional information about Eaton products please call 1-800-525-2000 or log onto www.eaton.com. Additional Medium Voltage Switchgear information regarding Pricing/Aftermarket, Customer Service, Engineering/Technical Information, or Warranty, can be found by calling 1-800-345-4072.

Eaton Electrical Services and Systems (EESS) can be reached at 1-800-498-2678.

If further information is desired regarding this particular installation or application information, contact the local Eaton sales office, reference Eaton's Consulting Application Guide, or the appropriate industry standards.

.

Instructions for installation, operation, and maintenance of 5/15 kV type VacClad-W metal-clad switchgear indoor housings

Instruction Booklet IB02200001E
Effective May 2018
Revision #4

1.5 Safety precautions

1. Read and understand these instructions before attempting installation, operation, or maintenance of the switchgear assembly.
2. Disconnect all low voltage and medium voltage power sources to the switchgear assembly before working on the equipment per the Occupational Safety and Health Act (OSHA) and lockout procedures. Verify that the voltage has been removed. Ground the load and line side connections. Observe National Electrical Code® (NEC®), OSHA, and local procedures and standards. This includes visual inspections while the door is open, making any adjustments inside or outside the enclosure, performing maintenance, or installing replacement parts.
3. Never leave a breaker in an intermediate position in its compartment. Always crank the breaker to the fully connected position, the "TEST" position, or fully withdrawn position. Do not attempt to open the door unless the breaker is in the disconnect position.
4. Never try to disconnect or open the secondary circuit of a current transformer that is producing current, because the transformer develops a dangerous high voltage if it is open circuited.

⚠ WARNING

BEFORE ATTEMPTING ANY WORK, EITHER DE-ENERGIZE THE CIRCUIT BY OPENING THE BREAKER OR SHORT-CIRCUIT THE SECONDARY OF THE CURRENT TRANSFORMER.

5. The user is responsible for conforming to all applicable code requirements with respect to grounding the switchgear assembly.

⚠ CAUTION

BEFORE ENERGIZING THE SWITCHGEAR ASSEMBLY, ENSURE THAT:

6. The switchgear assembly is secured on a true and level surface according to the floor plan of the customer drawings.
7. Confirm that all hardware is in place and tightened per Section 2.1, Table 2.
8. Confirm that no tools or objects are left inside the enclosure.
9. Confirm that all devices, covers, doors, panels, and so on are in place.
10. Before start up, perform a field power frequency withstand (Hi-Pot) test, using test voltages given in Table 1.
11. For additional safety information and safe-use practices for your VCP-W circuit breaker, refer to IB131006EN

Table 1. Power Frequency Withstand Test Voltages

Rated Maximum Voltage (kV)	Power-frequency Withstand (rms) (kV)
4.76	14.25
8.25	27
15.0	27
27.0	45
38.0	60

Section 2: Installing indoor switchgear

For information regarding the receiving, handling, storing, and installation of the equipment, please reference IB022014EN: Instructions for receiving, handling, storing and installation of medium voltage switchgear, in addition to the customer drawing package.

Instruction bulletins and drawings are located inside the upper compartment door of the first vertical section and online at www.eaton.com.

The detail box contains kits, bus, splice-plates, boots, tape kits for taping cable to riser joints, and the hardware required for installation of the switchgear.

2.1 Floor requirements

The finished foundation surface shall be flat and level within 0.06 inch [1.6 mm] in 36 inches [914 mm] in any direction, left to right, front to back, and diagonally. Alternatively a local flatness "FF" value of 50 or higher and an accompanying "FL" value of 37 to 40 as defined in industry standard ASTM-E1155-96 and industry standard ACI 117-90 may be used to establish the flatness and levelness of the finished foundation.

2.2 Installation procedure

Step 1: Bolt the groups together through the tie bolt holes leaving the hardware loose, until all sections are placed using the following procedure.

A. Obtain the tie bolt hardware kit located in the Shop Order Detail Box. Install a flat washer on the bolt end, insert the bolt through a hole, and then install a flat washer, split-lock washer, and nut. Torque the hardware per the specifications contained in Table 2, once all units are placed.

Table 2. Bolt Tightness Values for All Hardware Connections.

Bolt Size inches (mm)	0.25 (6.35)	0.31 (7.87)	0.38 (9.65)	0.50 (12.7)	0.62 (15.75)
Bolt Material	**Torque Value in Foot Pounds (N•m)**				
High-strength Steel	5 (6.78)	12 (16.27)	20 (27.12)	50 (67.8)	95 (128.82)
Silicon Bronze	5 (6.78)	10 (13.56)	15 (20.34)	40 (54.24)	55 (74.58)

B. Remove the rear covers or open the rear doors (if applicable) of the cells on the sides of all the shipping split. Remove from these sections the angled metal barrier and vertical main bus barrier from the cable compartment in the rear of the switch-gear (see Figure 3). Remove any other components such as potheads, surge suppressors, and so on, that interfere with access to these barriers.
Note: The rear assembly of the switchgear may vary.
Install tie-bolts in the rear module section between the shipping splits. See Figure 1 for the tie-bolt locations. Bolt holes #14 - #22 can be accessed from the rear module. Holes 20-22 are used for fiber optic cables. If not used, fill with tie-bolt hardware.

C. Open all the front doors. Refer to Figure 1 for the tie bolt locations. Insert and tighten the tie bolts between the front upright members at each shipping split. Bolt holes #1 - #12 can be accessed from the front module.

Instruction Booklet IB02200001E
Effective May 2018
Revision #4

Instructions for installation, operation, and maintenance of 5/15 kV type VacClad-W metal-clad switchgear indoor housings

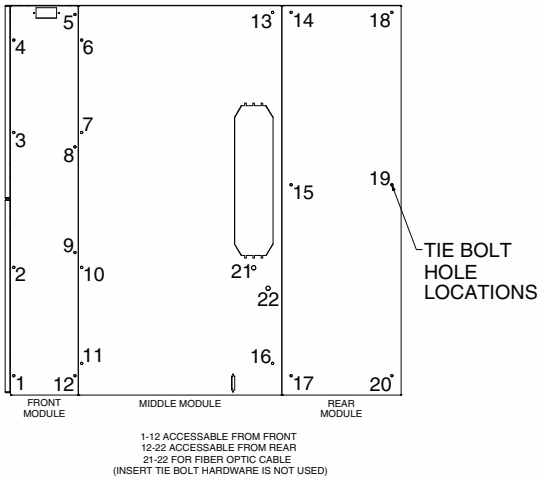

Figure 1. Typical Tie Bolt Locations.

Step 2: Check the entire lineup to make sure it is level and plumb prior to bolting or welding the base members of the vertical section frame, front, and rear to the foundation.

Step 3: Remove all shipping blocks or braces.

A. Examine all instruments, meters, relays, etc., and remove any shipping blocks or braces.

B. Remove the lifting angles from top of the units and discard them.

Step 4: Connect the ground bus.

A. The standard ground bus is a 0.25 x 2.00 inch (6.4 x 50.8 mm) (0.25 x 3.00 inch [6.4 x 76.2 mm] for equipment designed for 63 kAIC) copper busbar bolted to the cross members of the frame in the bottom of each switchgear unit. The ground bus runs through the center of each unit, through the length of the entire switchgear assembly. Install a ground link and hardware (ground link #8276A77H01, located in detail box) to connect the shipping sections (see Figure 2).

Figure 2. Ground Bus Installation.

B. Connect the switchgear assembly to the station ground. Solderless terminals are provided on the ground bus at each end of the switchgear for this purpose. The connection shall be made as direct as possible. The connection shall be large enough to carry the ground fault current of the installation. Never encase the ground bus in a metal conduit.

⚠ CAUTION

THE SWITCHGEAR INSTALLATION MUST BE PROPERLY GROUNDED.

Note: For the design and installation of a grounding system, refer to Electrical Power Distribution for Industrial Plants (Institute of Electrical and Electronics Engineers [IEEE] Std 141); Grounding of Industrial and Commercial Power Systems (IEEE Std 142); and the NFPA 70, Articles 100, 200, and 250.

For generating stations and larger substations, the ground resistance should be 1 ohm or less. For industrial plants and small substations, the ground should be less than 5 ohms (the NEC states that the ground resistance should never exceed 25 ohms).

Step 5: Connect the high voltage bus between the shipping sections.

A. Remove the horizontal metal barriers from the cable compartment in the rear of the switchgear. Remove the bus barriers. Also remove any other components, such as cable termination devices, surge protective devices, and so on, that interfere with access to the bus compartment.

Note: The rear assembly of switchgear may vary.

Figures 3 and 4 show the removal of the necessary barriers (typical).

Figure 3. Main Bus Installations with Bus Barriers Installed. Viewed from the rear with the rear covers removed (typical 1-hi construction shown).

Instructions for installation, operation, and maintenance of 5/15 kV type VacClad-W metal-clad switchgear indoor housings

Instruction Booklet IB02200001E
Effective May 2018
Revision #4

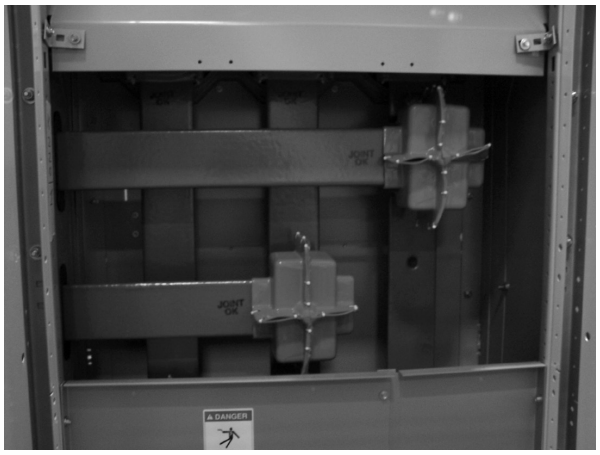

Figure 4. Main Bus Installation with the Barriers Removed.

B. Obtain the section of bus that was removed to separate the groups for shipping. Each section is labeled and shipped in the carton with the detail box.

C. The surfaces in the bus joints are plated. Clean the plated surfaces of the bus section with isopropyl alcohol if necessary.

Note: Plating may show signs of tarnish over time. This does not affect the functionality.

D. Slide the section of main bus through the supports in the side of the vertical section. Slide the rubber snubber along the bus until it fits inside the opening in the bus support.

When the bus section is disconnected for shipping, the splice plates and hardware are left bolted to the end of the bus in each of the adjoining vertical sections. Sandwich the end of the disconnected section between the splice plates and fit the other end of the section between the splice plates on the end of the bus in the adjacent section. Bolt the splice plates together on each end of the bus section. See Figure 4. Do not tighten until all joints throughout the line-up are installed.

E. Repeat these steps for each section of bus at each shipping break.

F. Torque the bolts in the splice plate to the values shown in Table 2. Make sure all structure and tie bolts (see Steps 3 and 4) are torqued prior to torquing bus-joint bolts.

G. Insulate each bus joint with plastic joint covers or insulating tape for unusual configurations.

Step 6: Connect the control wires.

A. Reconnect the wiring that was disconnected at the factory for shipping. The wiring as well as the connecting points are labeled.

B. Connect the remote apparatus wiring to the terminal blocks located in the control compartment or within the front of the vertical section.

Step 7: Replace the metal barriers and any other parts that were removed to gain access to the main bus compartments.

Step 8: Connect the main power cables.

A. Before connecting a cable, determine its phase. The switchgear system is supplied with connections for phasing 1-2-3, left to right, as viewed from the front, unless indicated otherwise on the shop order drawings.

B. If the two systems are to be paralleled, make sure the phase rotation and the phase voltages are the same. Make sure the phase angle difference between the voltages is zero. They must be the same to prevent damaging the equipment. The phase rotation must conform to the phase rotation on the shop order drawing so that the instruments, meters, and relays will operate properly.

C. Follow the instructions of the cable manufacturer to determine what minimum bending radius is permitted when forming cables to fit inside the cable compartment, and avoid sharp bending or kinking. Make sure the cables do not rest on sharp corners or edges that could damage the insulation.

D. Terminate power cables in accordance with cable manufacturer's instructions and cable termination manufacturer's instructions.

E. It is necessary to insulate all power cable connections to the switchgear terminals with suitable insulating media such as insulating tape, insulating boots, heat shrink insulation materials, insulating barrier systems, or other suitable materials to maintain the metal-clad switchgear insulation requirements as dictated in the applicable industry standards. This insulating media is not included in the standard scope of supply by Eaton. Refer to Section 10 for field taping instructions.

F. If potheads or other types of terminators are furnished, follow the instructions of the manufacturer when connecting the cable to them. Use the flexible connectors to connect the aerial lugs to the conductors. This will keep strain off the insulators of the pothead or the terminator. Tape (or otherwise insulate) the entire joint, including the flexible connectors. See Section 11.

G. If zero sequence current transformers are provided, pass the power cables through the transformer's window. Refer to Figure 38.

H. Replace all metal barriers and any other components removed during hookup of the high voltage bus. Replace them in the reverse order from which they were removed.

I. Replace all rear covers or close doors.

Step 9. Inserting breaker

A. Lower compartment direct roll-in-breaker only
Push the breaker into the breaker compartment until the breaker T-handle latches over the moving block on the levering screw assembly. In this position, the breaker is considered in the Disconnect position .

B. Lower compartment non-direct roll-in-breaker or upper compartment

1. The breaker compartment has an interlock assembly on the compartment levering assembly, located on both the left and right hand rail assemblies . The purpose of the interlock assembly is to prevent the breaker from being removed from the compartment without the extension rails in place .
2. In order to insert or remove a breaker a set of extension rails must be inserted into the left hand and right hand rail assemblies . This is achieved by inserting the appropriate rail, identified with a label, diagonally into the slot such that the extension rail, when lowered, unlocks the interlock allowing an installed circuit breaker to roll forward. The rolling surfaces of the compartment rail and extension rail are flush.
3. In this position, the breaker can be inserted or removed from the breaker compartment (see Figure 5 and Figure 6).

Instruction Booklet IB02200001E
Effective May 2018
Revision #4

Instructions for installation, operation, and maintenance of 5/15 kV type VacClad-W metal-clad switchgear indoor housings

Figure 5. Insertion of the Drawout Extension Rails.

Figure 6. Lifting and Setting the Breaker in the Housing.

Step 10: Checking pan operation

A. To operate the breaker at this time (test position mode), it is necessary to connect the secondary harness with the breaker.

   Manual secondary: For a manually engaged secondary harness, pull the secondary plug handle forward until the secondary receptacle located on the compartment levering pan fully mates with the secondary breaker wiring plug.

   Automatic secondary: For an automatically engaged secondary harness, rack the breaker into the test position identified by the Breaker position indication (BPI) label.

   In these positions, the breaker control circuit can be tested offline. (Breaker is not connected to the primary circuit.)

B. Movement of the breaker from the Disconnect or Test position to the Connect position.

   1. As the breaker is racked from Disconnect or Test, it will automatically open if it is closed.
   2. To prevent damage with a manually engaged secondary, the breaker secondary control plug must be manually engaged with the receptacle on the compartment levering system, before the breaker is moved to the connected position.
   3. Rotate the levering crank in a clockwise direction until the torque limiter on the levering crank "breaks free." As a check, the red indicator on the levering system can be seen through the window on the front of the levering system, or until the breaker cover plate aligns with the connect position location given on the BPI label (item 7, Figure 20a or 20b) if so equipped.

C. Movement of the breaker from the Connect position to the Disconnect or Test position.

⚠ CAUTION

IF THE BREAKER IS CLOSED, IT WILL OPEN AS THE LEVERING SYSTEM SLIDER (ITEM 6, FIGURE 20A) IS PUSHED TOWARDS THE REAR WALL OF THE CELL.

   1. Insert the levering crank onto the hex drive nut on the levering system. In order to engage the hex drive nut, you must push in the levering system slider..
   2. Rotate the levering crank in a counter-clockwise direction until the breaker is in the Test or the Disconnect position.

Note: The breaker secondary control receptacle on the compartment levering system is automatically disengaged from the breaker secondary plug when moved to the disconnect position.

Step 11: Test the breaker and cell interface per IB131006EN. This applies to both the direct roll-in breakers and non-direct roll-in VCP-W circuit breakers.

Step 12: Check the drawout voltage transformers, control power transformers, or fuse truck assemblies in the auxiliary compartments.

A. Before installing the drawout assembly into the enclosure, check the fuses for continuity. Make sure there is proper contact in the fuse clips.

B. Insertion of the extension rails:
   The drawout auxiliary assembly compartment has an interlock assembly on the compartment levering assembly located on the inside of both the left and right hand rail assemblies. The purpose of the interlock assembly is to prevent the drawout auxiliary assembly from being removed from the compartment without the extension rails in place. In order to insert or remove an auxiliary drawout assembly from its position, a set of extension rails must be inserted into the left hand and right hand rail assemblies. This is achieved by inserting the appropriate rail, identified with a label, diagonally into the slot such that the extension rail, when lowered, unlocks the interlock allowing the auxiliary drawout assembly to roll forward. The rolling surfaces of the compartment rail and extension rail are flush. In this position, the auxiliary draw out assembly can be inserted or removed from the auxiliary compartment (see Figure 5).

C. Installation of drawout assembly into the auxiliary compartment:

   1. Using a portable lifting device, place the drawout assembly onto the extension rails. (See Figure 7 for typical lifting of a draw out device and Figures 8, 9, and 10 for typical auxiliary drawers mounted on the extension rails.) Ensure all four wheels are on the extension rails before removing the yoke.

Instructions for installation, operation, and maintenance of 5/15 kV type VacClad-W metal-clad switchgear indoor housings

Instruction Booklet IB02200001E
Effective May 2018
Revision #4

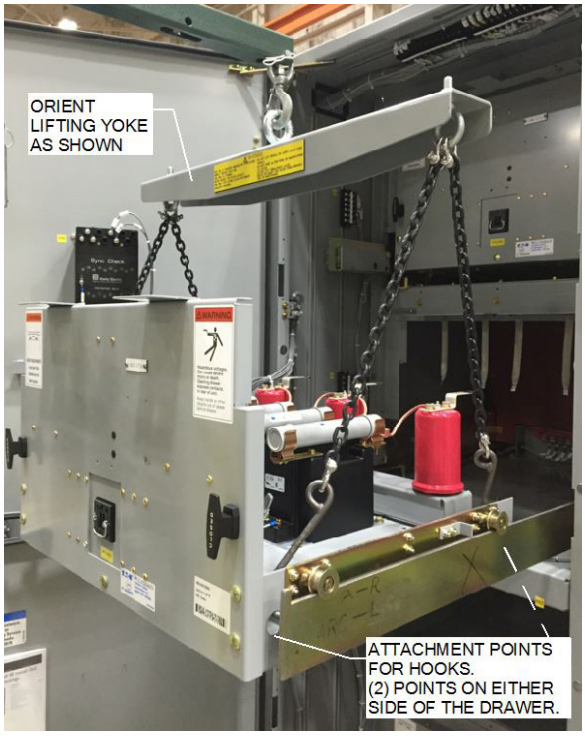

Figure 7. Lifting and Setting the Auxiliary onto the Extension Rails.

2. Push the drawout assembly into the compartment until the drawout assembly comes to a complete stop. Turn the two handles on the auxiliary drawout assembly to latch the assembly into place. In this position, the auxiliary drawout assembly is in the Connected position.
3. A cell interlock will be equipped on all CPT and/or fuse drawers (optional for VT drawers) and is mounted to the drawer (Refer to the bottom drawer of Figure 8). To engage the interlock, push the interlock bar up and turn on the secondary control breaker. For some applications, the secondary control breaker may be mounted separate from the drawer and a Kirk lock may be used. Refer to the scheme for proper Kirk lock operation.

D. Withdrawal of drawout assembly into the Disconnect position:

1. A cell interlock will be equipped on all CPT and/or fuse drawers (optional for VT drawers) and is mounted to the drawer (Refer to the bottom drawer of Figure 8). To disengage the interlock, turn off the secondary control breaker and push the interlock bar down. For some applications, the secondary control breaker may be mounted separate from the drawer and a Kirk lock may be used. Refer to the scheme for proper Kirk lock operation.
2. Turn the two handles to unlatch the drawout assembly and then pull drawout assembly out until it comes to a full stop. If the extension rails are removed, the assembly will stop on the interlock. The installation of the extension rails will allow the drawout assembly to be removed from the enclosure.

Figure 8. Typical Auxiliary with Drawers Mounted on the Extension Rails.

Figure 9. Drawout Drawer for Control Power Transformer on the Extension Rails.

E. Check the following drawout assembly functions:

1. When the auxiliary drawout assembly is fully inserted into the Connect position, check to make sure the primary contacts and secondary contacts are engaged when the auxiliary drawout assembly is Connected. Use a low voltage continuity testing device to verify the contacts are engaged. They should engage when auxiliary drawout assembly is within 1.00 inch (25.4 mm) of being fully in the Connect position.
2. Suspended from inside the compartment are three flexible, grounding straps. As the auxiliary drawout assembly is withdrawn to the Disconnect position, ensure that the grounding straps contact the fuses to momentarily ground them.

Instruction Booklet IB02200001E
Effective May 2018
Revision #4

Step 13: Perform loading check on both the control and primary circuits to assure the system is ready for operation.

Figure 10. Drawout Drawer for Voltage Transformer on the Extension Rails.

Section 3: Description of VacClad-W switchgear

3.1 Safety features

Eaton's VacClad-W switchgear is manufactured with several built-in interlocks. These built-in features are intended to protect personnel working on the equipment.

⚠ WARNING

MAKING SWITCHGEAR INTERLOCK INOPERATIVE MAY DAMAGE PROPERTY AND MAY CAUSE SEVERE INJURY OR DEATH.

Figure 11. Typical 5/15 kV Switchgear Assembly.

1. Coding plates:
   A coding plate is fastened to the bottom front edge of the breaker compartment. There is also a coding plate fastened to the front of the breaker. If the breaker has a lower interrupting rating than the rating of the compartment, or if the voltage and continuous current characteristics do not match, the coding plate on the compartment will prevent the entrance of the breaker into the compartment.

Note: Even with the coding plates, it is possible to put a breaker into the compartment who's control wiring is not coordinated with that of the compartment. Always check the shop order drawing to make sure the control wiring of the breaker and the compartment are the same.

2. Automatic shutter:
   An automatic shutter, shown in Figures 12 and 13, covers the primary disconnecting contacts when the breaker is withdrawn from the connect position. The shutter prevents persons who are working on the switch-gear from accidentally touching the primary contacts. Shutters also cover the stationary disconnects for auxiliary drawout assemblies.

Instructions for installation, operation, and maintenance of 5/15 kV type VacClad-W metal-clad switchgear indoor housings

Instruction Booklet IB02200001E
Effective May 2018
Revision #4

⚠ WARNING

DO NOT MANUALLY RAISE OR REMOVE THE SHUTTER UNLESS THE MAIN CONTACTS ARE DE-ENERGIZED AND GROUNDED, AND SAFETY PROCEDURES HAVE BEEN INITIATED TO MAKE SURE THE CIRCUITS CANNOT RE-ENERGIZE. FAILURE TO EXERCISE CAUTION MAY RESULT IN BODILY INJURY, DEATH, AND PROPERTY DAMAGE.

Figure 12. Automatic Shutters - Ring Type CTs with Shutters Closed and CT Barrier Removed.

Figure 13. Automatic Shutters - Ring Type CTs with Shutters Open and CT Barrier Removed.

3. Polyester CT barrier:
   An optional polyester CT barrier restricts inadvertent access to the CT's (see Figure 14). To remove the CT barrier, remove the two 9 inch bolts located at the top of the barrier.

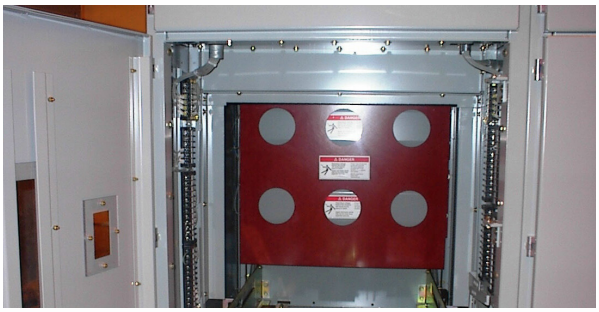

Figure 14. Ring Type CTs with Shutters Closed and CT Barrier in Place.

4. Ring-type current transformers:

   The ring-type current transformers are mounted over the primary contact insulating high voltage terminal on the rear wall of the breaker compartment. There is space for a maximum of four standard accuracy transformers per phase (two on each high voltage terminal of the breaker).

They are mounted so they can be reached from the front of the enclosure (see Figures 11 and 12). This makes it possible to add or to change transformers when the switchgear is de-energized and grounded. The polarity marks on the transformers show the relative instantaneous polarity in the primary and secondary windings. The equipment's electrical drawings show how to connect the transformers to give the polarity needed to operate relays, instruments, and meters.

5. Key interlocks:

   Key interlocks are supplied whenever a defined sequence of operation is required to ensure safe operation and access within the switchgear assembly, or with the switchgear assembly and external devices. Two typical applications within a switchgear assembly involve dummy circuit breaker elements and drawout fuse trucks. The operation of any key interlock scheme is described on the shop order drawings.

   For auxiliary drawer interlocks refer to Section 2.1. The cell interlock can be seen on the front of the bottom drawer in Figure 8

   For the circuit breaker pan key interlock refer to Figure 15.

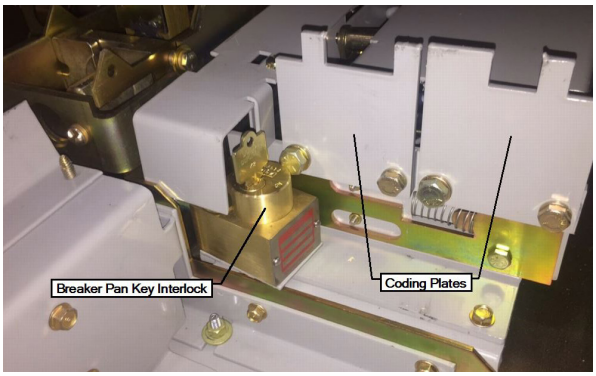

Figure 15. Circuit Breaker Pan Key Interlock

⚠ CAUTION

TO FACILITATE MANUFACTURE AND INSTALLATION PROCEDURES, A KEY IS USUALLY SUPPLIED WITH EACH LOCK. BEFORE PLACING SWITCHGEAR WITH KEY INTERLOCKS IN OPERATION, THE KEY SCHEME MUST BE CAREFULLY CHECKED AND ONLY THE PROPER KEYS LEFT IN THE LOCKS. ALL EXTRA KEYS MUST BE REMOVED AND DESTROYED OR STORED WHERE NOT AVAILABLE TO OPERATING PERSONNEL. THIS PROCEDURE IS NECESSARY BECAUSE IMPROPER USE OF SPARE KEYS WILL DEFEAT THE INTERLOCKING SCHEME.

6. Lockout-tagout features:

   a. Shutter LOTO

   Lockout-Tagout provisions are featured in the rear of the circuit breaker pan assembly. This assembly controls the opening of the shutters. In order to lockout the shutters in the closed position, a Padlockable Shutter kit is required (Refer to Figure 16).

   The padlockable Shutter Pin (Eaton Part# 1C19648) should be inserted into these provision holes according to the steps in Figure 17.

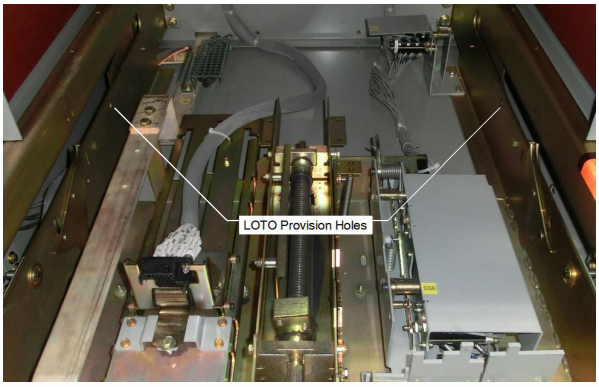

Figure 16. Lockout-tagout Provision Holes in the Circuit Breaker Pan.

⚠ CAUTION

THE SHUTTER LOTO DOES NOT LOCKOUT THE USE OF INTEGRAL RACKING WHERE APPLICABLE. USE OF THE INTEGRAL RACKING SYSTEM WHEN THE PADLOCK-ABLE SHUTTER PINS ARE INSERTED INTO THE SHUTTER LOTO PROVISION HOLES MAY CAUSE FAILURE RESULTING IN PROPERTY DAMAGE, SEVERE PERSONAL INJURY, OR DEATH.

Instructions for installation, operation, and maintenance of 5/15 kV type VacClad-W metal-clad switchgear indoor housings

Instruction Booklet IB02200001E
Effective May 2018
Revision #4

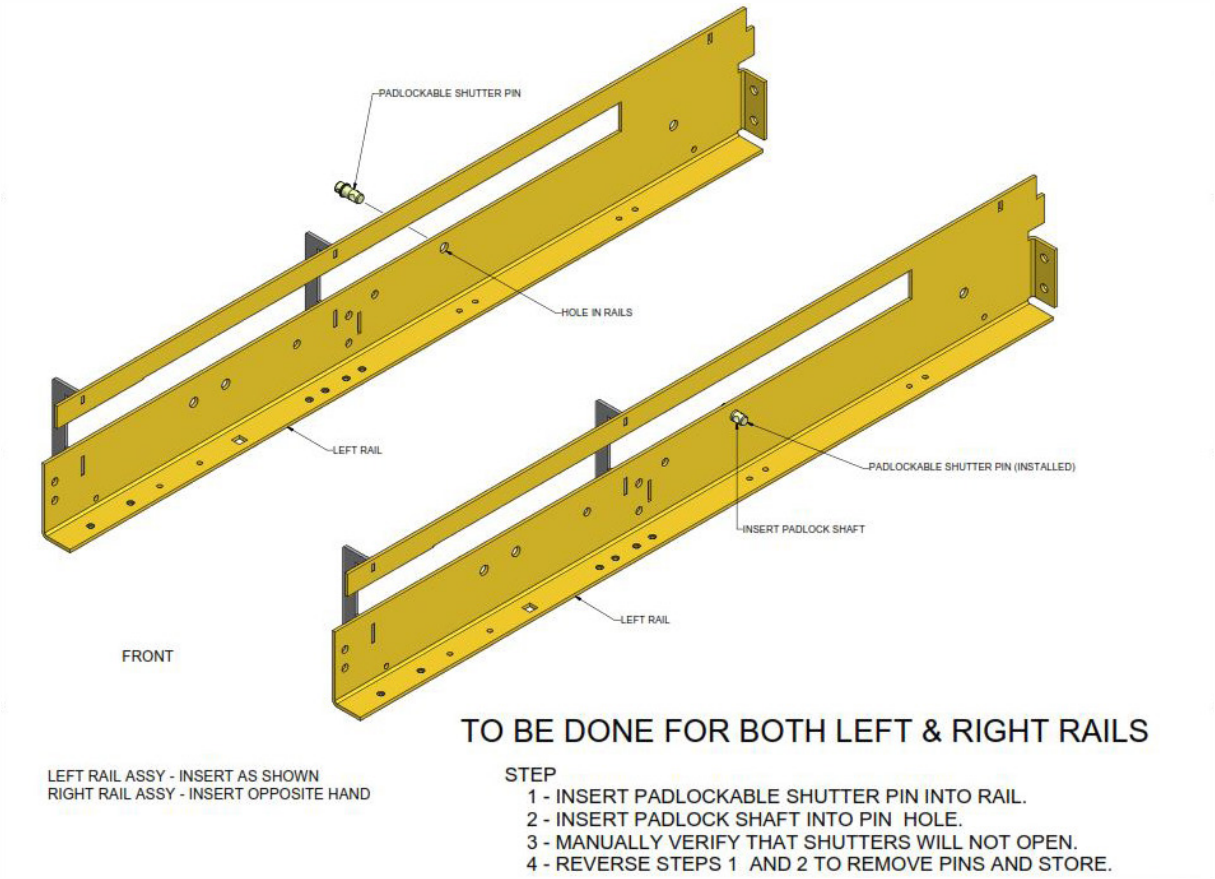

Figure 17. Lockout-tagout Provision Holes in the Circuit Breaker Pan.

b. Circuit breaker pan LOTO
Lockout-Tagout provisions are featured in the front of the circuit breaker pan assembly to prevent movement of the breaker.

1. Move the breaker to the fully withdrawn position.
2. Move the LOTO slider to the left in order for the LOTO slider to engage the slider used for racking (Refer to #6 in Figure 20b).
3. Insert a LOTO option (refer to Figure 19) into the circuit breaker pan LOTO provisions (See Figure 18).
4. When it is safe to do so, remove the lock to allow the LOTO slider to move to the right, when racking the breaker is required.

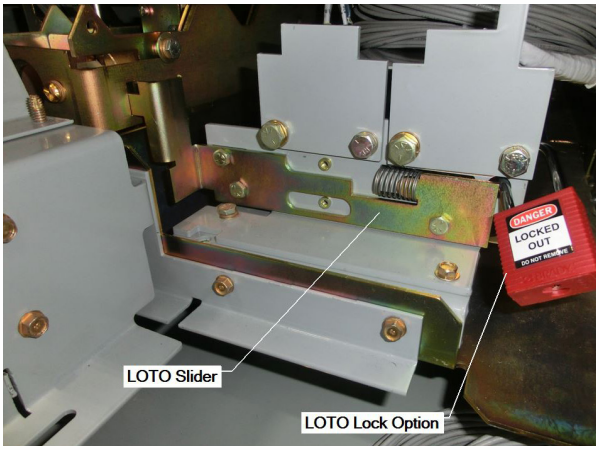

Figure 18. Lockout-tagout Provision for Circuit Breaker Lockout.

Figure 19. Several Acceptable Lockout-tagout Options.

Note: The LOTO options shown in Figure 19 only includes a handful of accepted options. Other options may also work with the Breaker Pan LOTO provision.

3.2 Breaker pan assembly

Callout descriptions for Figures 20a and 20b

1. Grounding contact grounds the breaker in all positions.
2. The levering system prevents removal of the breaker in any position other than the Disconnect (or Test) position.
3. The control wiring is arranged for pullout disconnecting by means of a 25-point female receptacle arranged to connect to a male plug on the breaker. The secondary disconnect is the connection for the control leads between the removable breaker and the stationary housing (see the breaker instruction book for further description).

   Manual secondary: Figure 20a represents a manually engaged secondary assembly that requires the customer to engage the secondary harness manually when the breaker is in the Disconnect position. When engaged, the breaker will now be in the Test position.

   Automatic secondary: Figure 20b indicates an automatically engaged secondary as offered on the BPI pan assembly and requires no manual input from the customer to engage the secondary harness. The secondary harness will engage automatically when the breaker is levered-in to the discrete Test position.

   The secondary harness, for manual and automatic types, automatically disconnects when the breaker is moved to the Disconnect position.
4. Racking screw performs breaker insertion and withdrawal.
5. Moving block couples to breaker for insertion and withdrawal.
6. Used to control access to the racking screw. In the event it is pushed in, the breaker will open per item 8.
7. Indicates when the breaker is in the fully connected position.

   Standard indication: Figure 20a represents positive indication of the breaker in the Connect position by use of a red flag that rotates into viewing position when the breaker is fully connected.

   BPI (breaker position indication) Label: Figure 20b represents positive indication of breaker location at any position through use of a colored label mounted on the top flange of the right hand rail assembly. Green indicates the Disconnect position, yellow indicates the Test position and red indicates the Connect position. Upon arriving at any of the three discrete positions; Disconnect, Test, and Connect, there is a black mark that aligns with the breaker cover to indicate exact location.
8. Slider interlock bracket.
   Figure 20a Slider cannot be used to open the breaker.
   Figure 20b Slider can be used to open the breaker.
9. The breaker MOC (mechanism-operated compartment) switch is an assembly of switches that is operated by a lever on the breaker mechanism. It can contain as many as 15 normally closed and 15 normally open contacts (beneath the cover) in the standard design.

   The MOC switch is activated by the breaker closing. It extends a plunger out the bottom of the mechanism and pushes down on the MOC switch operating mechanism. This, in turn, transmits the motion to operate the switch.
10. The TOC switch (truck operated compartment) has nine poles in the normal design – four contacts make and five break as the breaker is levered to the connected position. As the breaker is being levered into the connected position, a bracket on the breaker pushes the TOC switch lever during the last inch of travel. As a result, the TOC switch can be used to electrically indicate whether or not the breaker is in the connected position (beneath cover).
11. Coding plates: (see Safety features, Section 4.1).
12. Provision for padlocking a breaker in any position. Also a location for a key interlock.
13. Picture frame provides a closed barrier to the primary compartment when the breaker is connected.
14. Rail on which the breaker rolls.
15. MR2 Integral racking provisions for inclusion during manufacturing or aftermarket.

Instructions for installation, operation, and maintenance of 5/15 kV type VacClad-W metal-clad switchgear indoor housings

Instruction Booklet IB02200001E
Effective May 2018
Revision #4

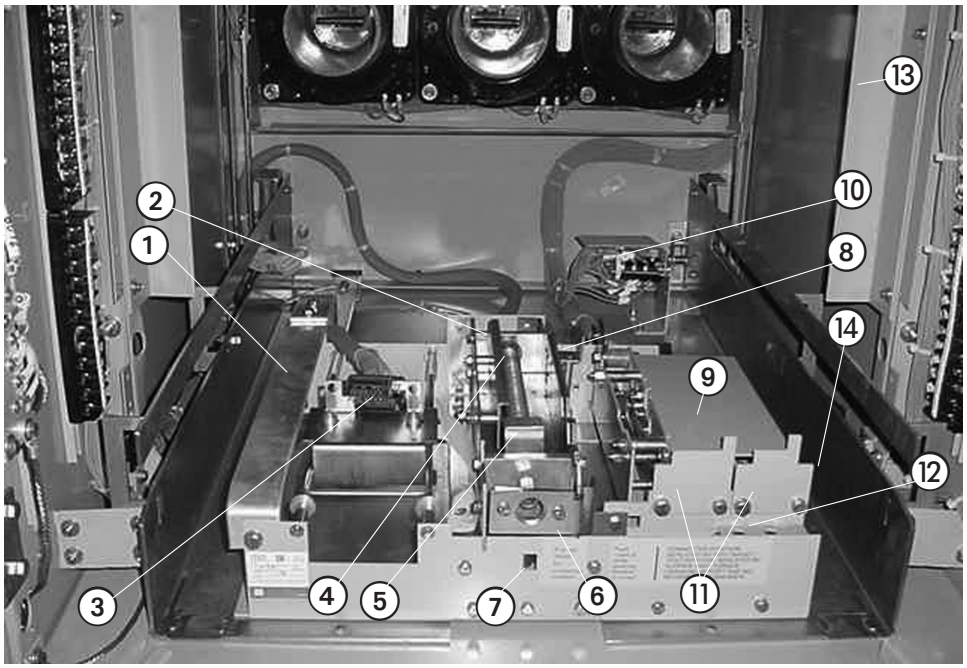

Figure 20a. Non-BPI Pan Assembly.

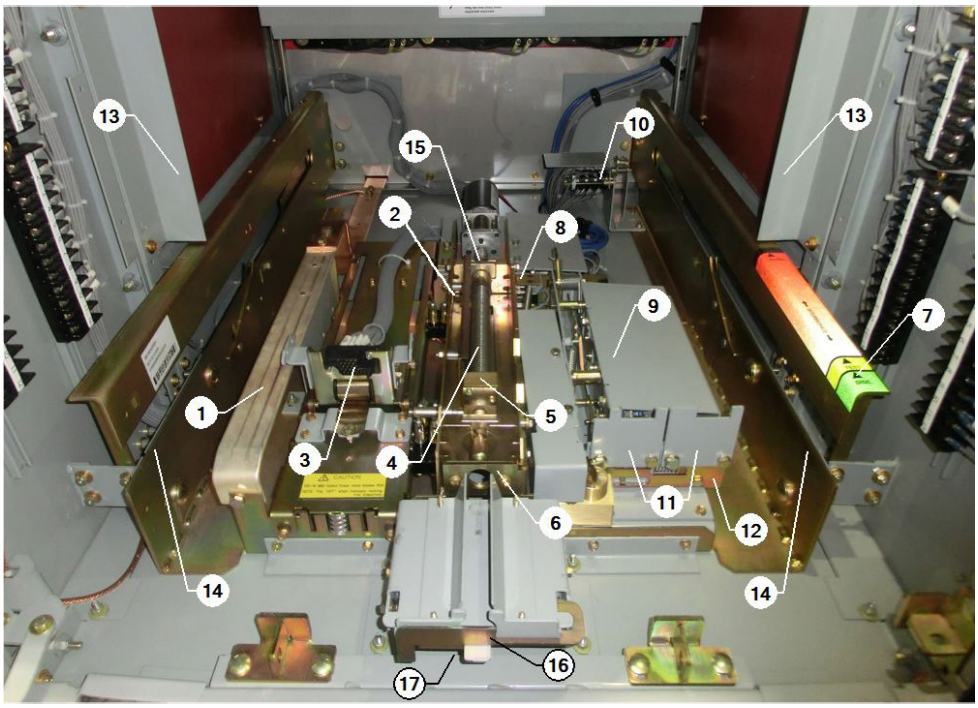

Figure 20b. BPI Pan Assembly.

Instruction Booklet IB02200001E
Effective May 2018
Revision #4

Instructions for installation, operation, and maintenance of 5/15 kV type VacClad-W metal-clad switchgear indoor housings

Section 4: Adjusting and testing

Step 1: After the switchgear has been installed and connected to the apparatus it is to control, give it a final check before it is put into service.

Note: Make sure the apparatus being controlled is not connected to the system while the tests are being carried out.

The testing equipment will depend on the size and type of installation. Use portable voltmeters. Use a low voltage continuity testing device to verify correct continuity of circuits.

Step 2: Examine all wiring circuits to make sure they have not been damaged or loosened during shipment or installation.

Step 3: Make sure all the connections are correct before the equipment is operated. "Light out" connections between the switchgear and remote apparatus such as instrument transformers, auxiliary switches, and remote control and interlock circuits.

Step 4: Coordinate the settings of the relays with other parts of the system in accordance with the standards or operating practice of the purchaser.

Step 5: If the covers are removed from meters, relays, or other devices for installation or test, handle them carefully. Replace the covers as soon as possible to keep dust and dirt out of the components.

Step 6: Perform a loading check of the control circuits. Before energizing the control circuits, check the control bus with an ohmmeter to make sure there are no short circuits in the control wiring. If an ohmmeter is not available, connect a small fuse in series with the source of the control power. This will protect the control wiring against damage. (The fuse should be one-fourth the normal rating of the circuit).

Section 5: Operation of the system

Step 1: Study and understand the electrical drawings furnished with each switchgear system.

Step 2: Install the circuit breaker in the Disconnect position.

Manual secondary: To engage secondary harness, lift and pull the secondary disconnect forward to engage the control circuit.

Automatic secondary: To engage secondary harness, rack the breaker to the test position to engage the control circuit.

Check that the breaker operates.

Step 3: A green light on the hinged instrument panel on the front of the breaker compartment shows the breaker is open. A red light shows the breaker is closed. Refer to the diagrams supplied with the switchgear for the control scheme details, indicating light colors, and functions.

Step 4: The details of the breaker control schemes vary from one installation to another. They comply with the requirements set forth by IEEE, NEMA, and ANSI. All of the electrical control schemes are designed to coordinate electrically with the mechanical design of the breaker.

Instructions for installation, operation, and maintenance of 5/15 kV type VacClad-W metal-clad switchgear indoor housings

Instruction Booklet IB02200001E
Effective May 2018
Revision #4

Section 6: Inspection and maintenance

6.1 Safety precautions

Refer to Section 1.6, "Safety precautions."

⚠ WARNING

WHEN INSPECTING, REPAIRING, AND PERFORMING MAINTENANCE ON SWITCHGEAR, THE FACT THAT DANGEROUS VOLTAGES MAY EXIST MUST BE KEPT IN MIND. PRECAUTIONS MUST BE TAKEN TO INSURE THAT PERSONNEL DO NOT COME IN CONTACT WITH ENERGIZED HIGH VOLTAGE PARTS. FAILURE TO DO SO MAY RESULT IN DEATH, PERSONAL INJURY, OR PROPERTY DAMAGE.

Some common general precautions for high voltage work are:

Connections

All connections should be considered energized until the personnel expecting to work on them is assured that the circuits are de-energized, and until every possible precaution has been taken to see that there is no chance of a circuit being energized while the crew is working.

Switches

Switches, which have been opened to de-energize a circuit to permit work on equipment, should be locked or blocked open and a suitable visible warning device placed on them.

Grounding

Do not work on parts normally carrying current at high voltage until these parts have been disconnected and grounded to the ground bus. The purchaser should make provisions for connecting adequate, flexible ground leads to every part of the switching equipment.

6.2 Access to switchgear parts

6.2.1 High voltage parts

VacClad-W switchgear is a metal-clad design. All major parts of the primary circuit are isolated by grounded metal barriers and enclosed within separate compartments. For example, the circuit breaker, main bus, and primary line and load terminations are isolated from each other and enclosed in separate compartments, which are made from grounded metal barriers and covers. Access to high voltage parts can be gained by removing the covers and barriers. The covers and barriers should not be removed unless the parts to be exposed are de-energized.

6.2.2 Main contacts

Stationary main disconnecting contacts are located behind the automatic safety shutters. Upper and/or lower stationary contacts can be exposed by manually opening the shutters (see Figures 12 and 13). Do not expose any contacts unless all upper and lower high voltage parts are de-energized.

⚠ WARNING

FAILURE TO DO SO MAY RESULT IN DEATH, PERSONAL INJURY, OR PROPERTY DAMAGE.

6.2.2.1 Manually opening the shutters

1. Insert the breaker maintenance tool (see Figure 22), such that the handle rests on the welded rail support while making contact with the hardware assembly on the manual shutter extension (Refer to Figure 21).

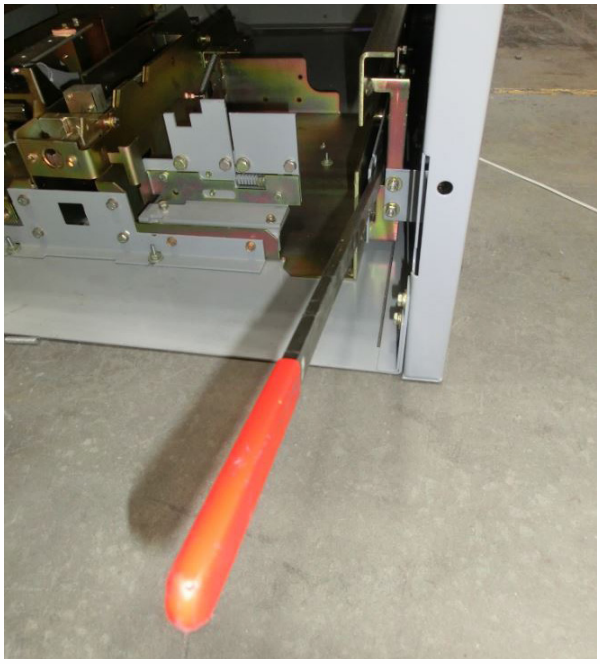

Figure 21. Insertion of Maintenance Tool into the Pan for Manually Opening the Shutters.

2. Push down on the maintenance to open the shutters (Refer to Figure 22).

Note: Shutters will close if pressure is removed from the maintenance tool. Shutters can be locked into place with the shutter lock kit or other manual means.

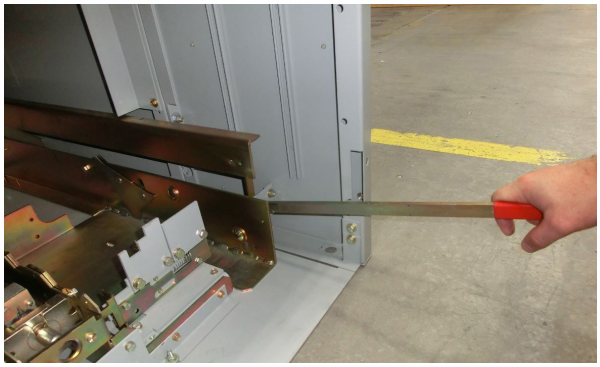

Figure 22. Hand Operation to Manually Open the Shutters

6.2.3 Current transformers

Window type current transformers are installed over the primary contact insulating tubes in the front of the unit (see Figures 12 and 13). All primary circuits must be de-energized prior to gaining access to any CTs.

6.2.4 VT and primary fuses

Disconnecting transformers and fuses:

Simply pulling out the drawer automatically disconnects and grounds the moving high voltage parts. Shutters automatically cover the primary disconnects (see Figure 23).

⚠ WARNING

DO NOT ATTEMPT TO REMOVE THE BACK COVERS OR TO OPEN OPTIONAL REAR DOORS, THE DISCONNECTING ASSEMBLIES, OR THE SHUTTERS UNLESS THE HIGH VOLTAGE CIRCUITS TO THE COMPARTMENT ARE DE-ENERGIZED AND PRECAUTIONS HAVE BEEN TAKEN TO PREVENT ENERGIZATION. FAILURE TO DE-ENERGIZE THE CIRCUIT MAY RESULT IN BODILY INJURY OR DEATH. WHEN ENERGIZED, THE CIRCUIT CARRIES LETHAL HIGH VOLTAGES.

Figure 23. Typical VT and CPT Drawer in the Upper Drawout Position.

6.2.5 Control equipment

With the exception of apparatus such as current transformers and rear-mounted heaters, control equipment and wiring is generally accessible without exposing high voltage parts.

6.3 Inspection and maintenance schedule

To assure high-quality service, a definite maintenance schedule, systematically followed, is essential. Plant, operating, and local conditions vary to such an extent that the schedule must be prepared to suit the conditions. However, the following general requirements should be helpful in setting up the program.

⚠ WARNING

BEFORE ATTEMPTING ANY INSPECTION OR MAINTENANCE, BE SURE THAT ALL PRIMARY AND CONTROL CIRCUITS HAVE BEEN DE-ENERGIZED AND GROUNDED AS REQUIRED AND THAT PROPER STEPS HAVE BEEN TAKEN TO BE SURE THAT THEY WILL REMAIN DE-ENERGIZED UNTIL ALL WORK IS COMPLETED. FAILURE TO DO SO MAY RESULT IN BODILY INJURY OR ELECTROCUTION. WHEN ENERGIZED, CIRCUIT CARRIES LETHAL HIGH VOLTAGE.

6.3.1 Individual devices

The maintenance schedule for individual devices, such as circuit breakers, relays, and so on, should be based upon recommendations contained in the individual instruction book for the device. These operations should be coordinated with the overall program to result in the least operating inconvenience and circuit shutdown.

6.3.2 Overall maintenance

The switchgear installation should be given a thorough overall maintenance check at the end of the first year in service because it provides an opportunity to evaluate conditions at an early point in the life of the equipment. Where conditions are abnormal, more frequent inspection and maintenance is necessary. Where conditions warrant, a longer period of time between maintenance periods may be used. The following require attention.

1. Buses and connections
   De-energize the primary circuits and remove the cover plates from the primary compartments. Before cleaning, take megohmmeter (megger) readings between phases and each phase to ground. Inspect for signs of overheating or weakened insulation. Remove dust from buses, connections, supports, and enclosure surfaces. A vacuum cleaner with a long nozzle will be of assistance. Wipe clean with distilled water and wipe dry.

   After buses have been dusted and wiped clean, take megger readings again between phases and each phase to ground. Keep a record of these readings for future reference in determining when trends occur that would indicate a lowering of the insulation resistance.
   Periodic high-potential tests are not required after initial start-up and are recommended only after repair of high voltage buses or installation, or when the trend of megger readings indicates it to be advisable. Refer to Table 1.

2. Primary disconnecting contacts and primary contact insulating tubes
   Remove each breaker from its compartment. De-energize the primary circuits and expose the primary contacts and their supports by manually opening automatic safety shutters. Wipe clean with a cloth moistened in a non-flammable solvent. Inspect for abnormal wear or overheating. Discoloration of the surfaces is not harmful unless corrosion due to atmospheric conditions is severe, resulting in deposits on the surface. Check each breaker while it is out of the housing for all items recommended in the instruction book applying to that particular type of breaker.

3. Other disconnecting contacts
   Inspect all secondary disconnecting contacts, such as those on auxiliary drawout assemblies, for abnormal wear, fatigue, or overheating. Replace if necessary. Otherwise treat the same as the main disconnecting contacts above.

4. Control contactors
   Contacts should be inspected and dressed or replaced when the surface becomes pitted. Unless repetitive duty has been experienced, little attention should be required.

5. Instruments, relays, and other panel mounted devices
   Individual devices should be maintained according to the specific instructions supplied for each device. Remove all relay covers and inspect the interiors for dust or dirt. Relay test personnel can easily perform this operation during periodic relay testing.

6. Secondary wiring
   Check all wiring connections for tightness, including those at the current and voltage transformers and at the terminal blocks where circuits leave the switchgear. Make sure that all secondary wiring connections are properly connected to the switchgear ground bus where so indicated.

7. Mechanical parts
   Visually check and manually operate mechanical moving parts such as the shutter, TOC and MOC switch assemblies, the position interlock, hinged doors, and the drawout features of the auxiliary drawout assemblies. Examine mechanical mating parts such as the breaker secondary contacts blocks, guide rails, and trippers. Grease the racking screw and the plunger/operating mechanism of the MOC switch, as called out in Section 4.3, items 4 and 9.

8. Ventilation
   Check all grillwork and air passages for obstructions and accumulations of dirt.

9. Battery and charging equipment (optional)
   The control battery is such an important item in switchgear operation that it must be given special periodic attention if it is to give reliable service for a long period of time. Periodic inspections and test are recommended in the battery supplier(s) instructions. At the same time the battery is checked, inspect the battery charger and remove accumulations of dust and dirt. On all chargers having a manual transfer switch for setting the charging rate, check carefully to be sure that the selector switch is returned to the value appropriate for a floating charge at the end of the periodic inspection. Serious damage to the control battery can occur if the charger is left on a high charging rate for an extended period of time.

10. Records
    The condition of each switchgear unit at the time of inspection should be listed in a permanent record to become a guide for anticipating the need for replacements or for special attention between the regular maintenance periods. Megger tests are suggested for checking the insulation. A series of these tests will indicate any tendency toward a reduction in dielectric strength of the insulation. Megger readings should be taken before and after cleaning the equipment and, where possible, under similar conditions at successive periods. Records should include the megger reading, the temperature, and the humidity.
    The readings will vary with the extent and design of the bus structure. In contrast with a small installation, the longer switchgear assemblies will have a more extensive bus structure with a greater number of insulators and, thereby, a larger number of parallel insulation resistance paths to ground which will tend to decrease megger readings. This variation in insulation resistance between different switchgear assemblies emphasizes the value of a series of readings, which can be charted to establish a normal insulation level so that progressive weakening of the insulation can be recognized.

11. Abnormal conditions
    Local conditions such as high humidity, salt-laden atmosphere, corrosive gases, heavy dust, or severe circuit operating conditions, are considered to be abnormal. They will require more frequent inspections.
    It should be emphasized that a series of inspections should be made at quarterly intervals until the progressive facts of the local conditions can be analyzed to determine a schedule which will maintain the equipment in satisfactory condition.
    In some locations, conditions may be so harsh that the frequency of maintenance will interfere with operating and production schedules. In such cases, consideration should be given to the possibility of enclosing the switchgear equipment in a relatively tight room and supplying a sufficient quantity of clean air to maintain a positive pressure in the room. Under such conditions, maintenance schedules may then be established on a more normal basis. Such an arrangement might also provide for cooling the air where the ambient temperature is relatively high, thus further improving operating conditions.

Section 7: Lubrication

VacClad-W Switchgear is designed so that lubrication in usual service is infrequently required under normal conditions. However, unusual service conditions such as high humidity, salt-laden atmosphere, corrosive gases, or severe circuit operating conditions may demand more frequent relubrication. All mechanical parts have been lubricated during assembly with molybdenum disulphide grease (Eaton Electrical Material No. 53701QB). The application of the lubricants should be held to a minimum to reduce the accumulation of dust and dirt.

7.1 Where to lubricate

1. MOC Switch (Refer to #9 in Figure 20b) – Grease (Eaton Electrical Material No. 53701QB) should be applied to the three locations where the rotary switch assemblies link to the Push Bar assembly (see Figure 24). This should be done at least every 3 years.

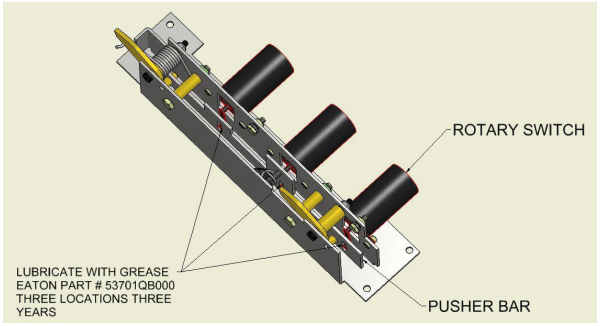

Figure 24. Lubrication Locations for the MOC Switch.

2. Racking Screw (Refer to #4 in Figure 20b) – With the breaker removed, apply grease (Eaton Electrical Material No. 53701QB) to the racking screw (see Figure 25). Grease should be applied with a brush using a motion perpendicular to the axis of the threaded shaft. It is important the grease is applied to the face of the threads. Apply to the length of the exposed threads and then move the nut from disconnect to connect to distribute the grease.

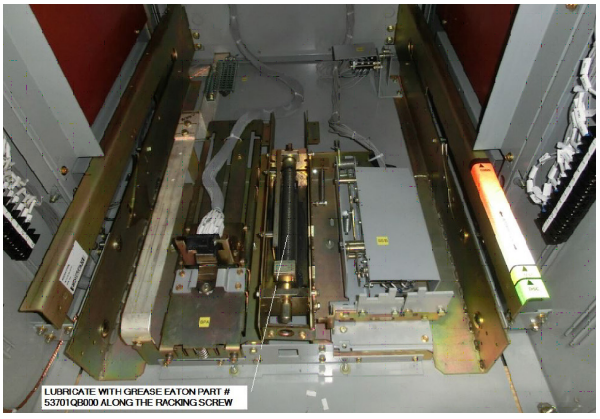

Figure 25. Lubrication Location for the Racking Screw.

Instruction Booklet IB02200001E
Effective May 2018
Revision #4

Section 9: Renewal parts

When ordering renewal or spare parts, include as much information as possible. In many cases, the style number of the new part can be obtained from identification on the old part. Always include a description of the part. Specify the rating, structure number, and shop order number of the switchgear housing in which the part is to be used. See Reference Guide RP02201001E for renewal parts list.

Section 10: Accessories

10.1 Standard accessories

Each new VacClad installation is provided with a set of accessories. Depending upon customer's specifications and the nature of the installation, the accessories will include one or more of the following.

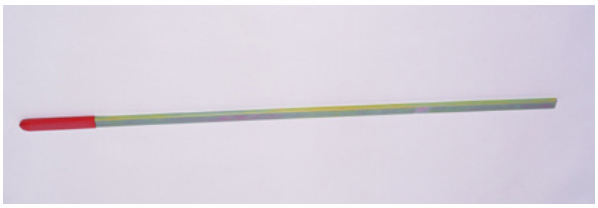

Figure 26. A Maintenance Tool.

The maintenance tool is used for manually charging the breaker closing spring and manually opening the shutter. For proper use of maintenance tool involving manual operation of the shutters, reference section 6.2.2. For other uses involving the circuit breaker, reference the VCP-W Circuit Breaker, IB131006EN.

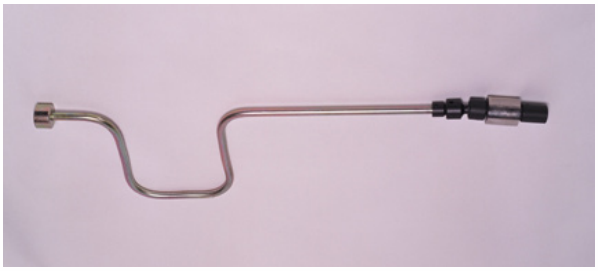

Figure 27. A Levering Crank.

The levering crank is used for moving the breaker or auxiliary drawers between the "Disconnect" and "Connect" positions.

Figure 28. Breaker Lifting Yoke.

The breaker lifting yoke is used for attachment to breaker on or off breaker compartment extension rails. I.L. 32-275-1 provides complete instructions.

Figure 29. Auxiliary Lifting Yoke.

The auxiliary lifting yoke is used to lift CPT, fuse, or VT drawout drawers off the extension rails.

Figure 30. Extension Rails.

The extension rails are used for extending the cell rails so that a breaker or auxiliary drawer can be rolled out of its compartment on extension rails for maintenance or removal.

10.2 Optional accessories - test cabinet

1. Test cabinet
   A test cabinet is used for electrically opening and closing of the breaker when it is outside its housing. For operation of the test cabinet reference I.L. 32-275-4. For operation of the accompanying test jumper, reference I.L. 32-275-5.

Figure 31. Test Cabinet and Test Jumper.

2. Portable lift device
   The portable lifting device is used for raising or lowering the breaker to the compartment extension rails and either lifting the breaker onto or off the rails (see Figure 32).

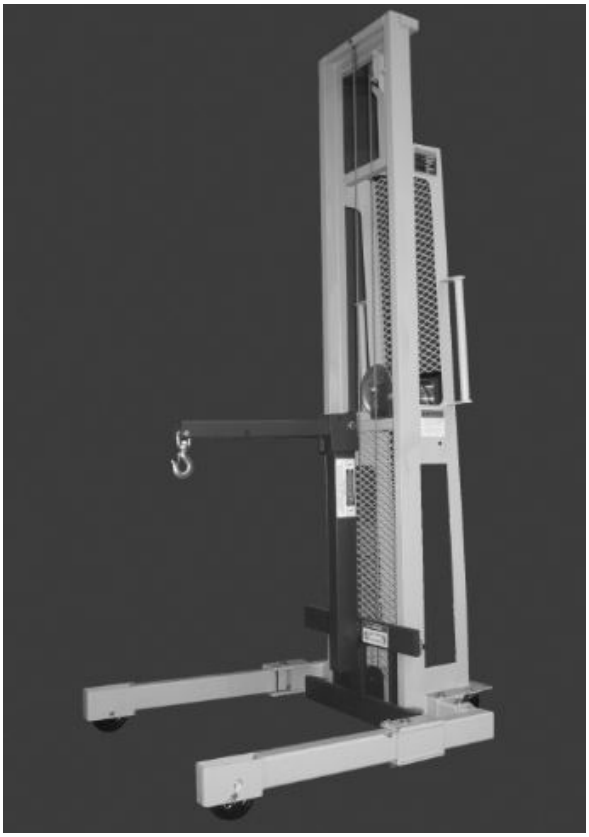

Figure 32. Portable Lift Device.

3. Dockable transport dolly

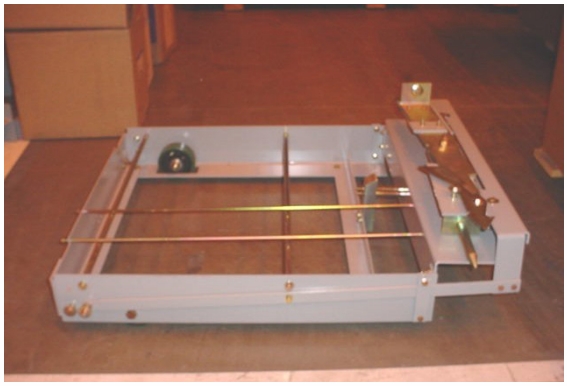

Figure 33. Dockable Transport Dolly.

The Dockable Transport Dolly is used for removing the breaker from the lower compartment without lifting (bottom compartment only). This device "docks" with the lower breaker pan assembly in place of the extension rails. I.L. 32-275-6 provides complete instructions.

4. Breaker ramp assembly

The breaker ramp assembly is used for inserting or removing a breaker from the bottom compartment of a vertical section without the need of any lifting device.

Figure 34. Breaker Ramp Assembly.

5. Ground and test device

The ground and test device provides a convenient means to ground a circuit for maintenance work, apply potential for cable testing, and access both bus and line circuits for "phasing out" tests.

Figure 35. VCP-W Manual Ground and Test Device.

Instructions for installation, operation, and maintenance of 5/15 kV type VacClad-W metal-clad switchgear indoor housings

Instruction Booklet IB02200001E
Effective May 2018
Revision #4

Section 11: Metal-clad switchgear field taping procedure (5/15 kV)

11.1 Busbar taping

Materials for taping

Reference Figure 36 and Figure 37 below for details on proper bus-bar taping.

- Filler: A putty-like material:
  Trade name: Scotchfil or Nashau 102. Pieces of insulating tape may be used.
- Insulating tape and pad – High voltage EPR insulating tape:
  Trade name: Scotch 130C.

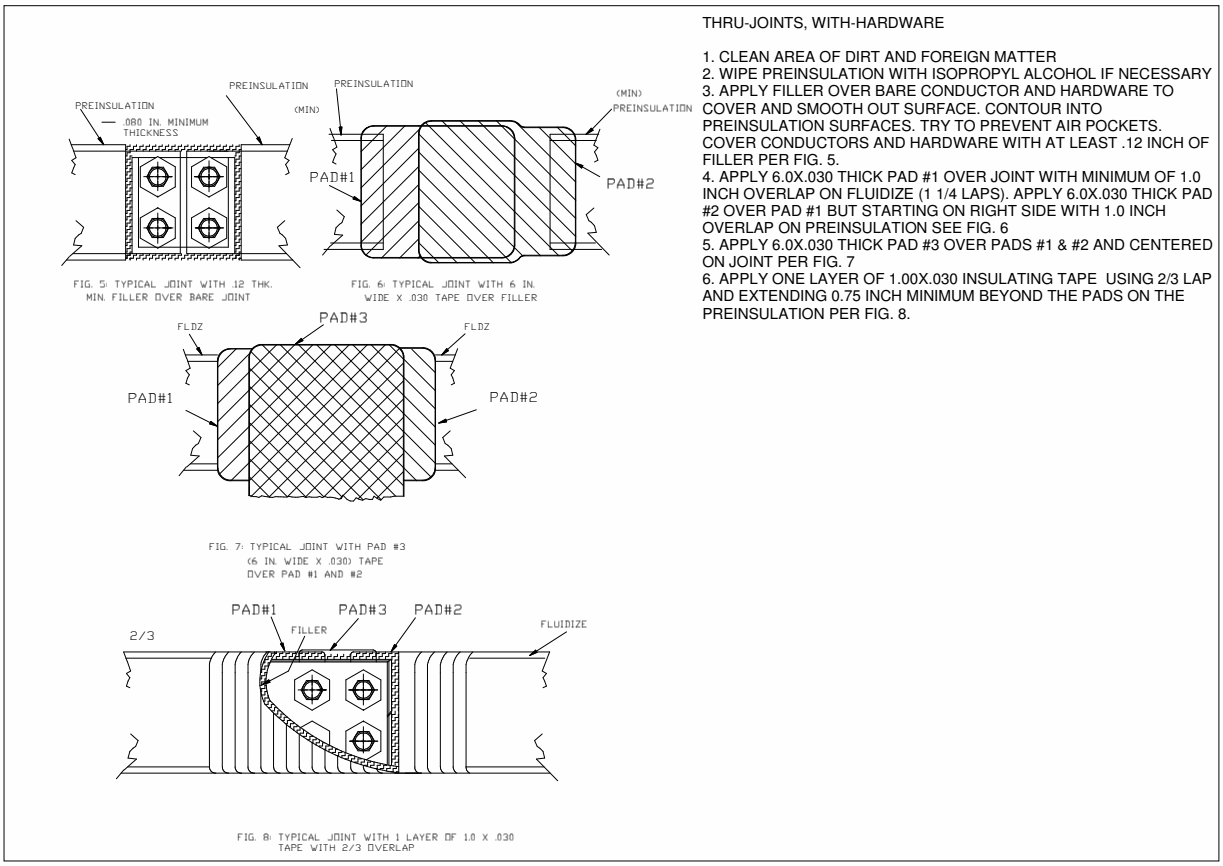

Figure 36. T-joint Field Taping Methods.

11.2 Using an insulating boot

Step 1: Clean the area of dirt and foreign matter. Use a clean, dry cloth or, if necessary, dampen slightly with distilled water. Do not use any abrasives or solvents.

Step 2: Place the boot over the joint so it fits in place. Fasten together with plastic wire ties. Cut off excess ends of plastic wire ties.

11.3 Cable termination taping

If cable termination insulation boots are not provided, Eaton recommends using tape material, Trade name: Scotch 130C, for all cable termination insulation. Refer to 3M's taping method instructions, Tape Method for Insulating Bus-Bar Connections 5-35 kV to Meet ANSI C37.20 Requirements, for installation techniques when using this tape.

Instruction Booklet IB02200001E
Effective May 2018
Revision #4

Instructions for installation, operation, and maintenance of 5/15 kV type VacClad-W metal-clad switchgear indoor housings

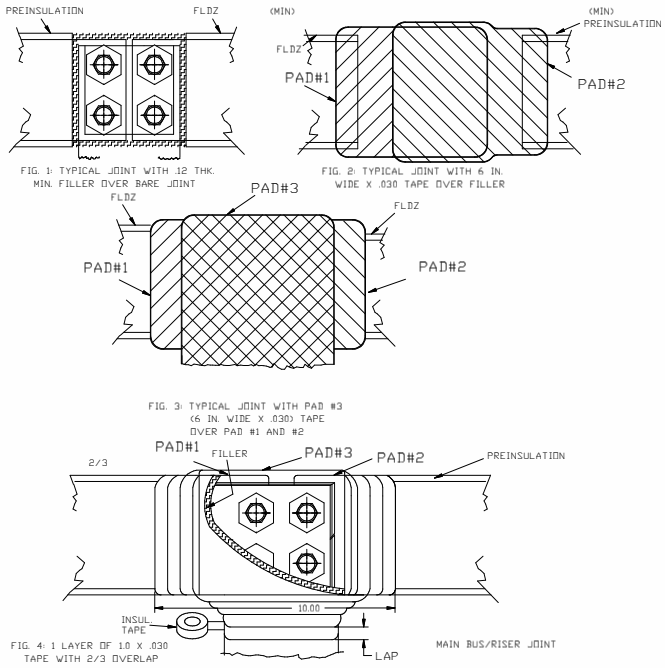

MATERIALS
FILLER - A PUTTY-LIKE MATERIAL.TRADE NAMES: DUCTSEALER, DUCT SEAL, SCOTCHFIL, EATON. NO. 53351BB AND 53351WX.

TAPE - HIGH VOLTAGE EPR INSULATING TAPE. TRADE NAME: SCOTCH 130C TAPE, EATON. 45151SE.

DEFINITIONS
JOINT - AREA TO BE COVERED WITH TAPE. CONSISTS OF BARE CONDUCTOR AND 1.5 INCHES OF ANY PRE-INSULATION NEXT TO THE BARE CONDUCTOR.

PRE-INSULATION - ANY INSULATING COVERING OR COATING SUCH AS EPOXY COATING OR INSULATING TUBING ADJACENT TO AN EXPOSED CONDUCTOR PRIOR TO TAPING.

PAD - ANY INSULATING TAPE WHICH IS WIDER THAN ONE INCH CONSISTING OF ONE LAYER OR MULTIPLE LAYERS WRAPPED DIRECTLY ON TOP OF EACH OTHER.

LAYER - INSULATING TAPE, 1 INCH WIDE, WRAPPED FROM ONE END OF THE JOINT TO THE OTHER, SO EACH SUCCEEDING TURN LAPS THE PREVIOUS TURN BY THE AMOUNT SPECIFIED IN THE METHODS PROCEDURE.

OVERLAP - A SPECIFIED DISTANCE MEASURED ALONG THE INSULATION STARTING FROM THE POINT WHERE THE INSULATION ENDS

METHODS
GENERAL
1. ELONGATE INSULATING TAPE 10 TO 25 PERCENT DURING APPLICATION TO INSURE A SMOOTH, TIGHT FIT. ON PADS ELONGATE CORNERS ONLY.
2. SHOULD A TAPE ROLL EXPIRE, START THE NEW ROLL BY OVERLAPPING THE PREVIOUS END BY .5 TURN.

"T"-JOINTS, WITH-HARDWARE
1. CLEAN AREA OF DIRT AND FOREIGN MATTER
2. WIPE PREINSULATION WITH ISOPROPYL ALCOHOL IF NECESSARY
3. APPLY FILLER OVER BARE CONDUCTOR AND HARDWARE TO COVER AND SMOOTH OUT THE SURFACE. CONTOUR INTO PRE-INSULATION SURFACES. TRY TO PREVENT AIR POCKETS. COVER CONDUCTORS AND HARDWARE WITH AT LEAST .12 INCH OF FILLER PER FIG. 1.
4. APPLY 6.00 X .030 THICK PAD #1 OVER JOINT WITH MINIMUM OF 1.0 INCH OVERLAP ON PREINSULATION. APPLY 6.00 X .030 THICK PAD #2 OVER PAD #1 BUT STARTING ON RIGHT SIDE WITH 1.0 INCH OVERLAP ON PREINSULATION SEE FIG. 2
5. APPLY 6.00 X .030 THICK PAD #3 OVER PADS #1 AND #2 AND CENTERED ON JOINT PER FIG. 3
6. APPLY ONE LAYER OF 1.00 X .030 INSULATING TAPE USING 2/3 LAP AND EXTENDING .75 INCH MINIMUM BEYOND THE PADS ON THE PREINSULATION (FIG. 4).

Figure 37. Thru-joint Field Taping Methods.

Table 3. Taping Chart.

Switchgear Voltage	Pre-insulation or Pad Overlap Minimum		Insulating Tape	
kV	in (mm)	Lap of Tape	Layers	Number of Pads
Up to 5	1.50 (38.1)	0.5	1	1
7.5 and 15	1.50 (38.1)	0.66	1	2

11.4 Responsibility of installer

- For incoming or outgoing terminations, these approved materials are not supplied by Eaton and must be obtained and installed by others as identified above in the definitions.
- For connections involving shipping splits within an assembly, or connecting to a transformer, or to an AMPGARD MCC, or to an MVA switchgear assembly, insulating materials will be supplied by Eaton only if necessary. It is the responsibility of the installer to insulate the connections in accordance with these instructions.
- For an assembly that does not have continuous insulating sleeving on the phase bus conductors, cable connections or bus connections to other apparatus, insulation of these connections must be made.

⚠ CAUTION

FAILURE TO INSTALL FIELD INSULATION WHERE NECESSARY IN ACCORDANCE WITH THESE INSTRUCTIONS WILL COMPROMISE THE ELECTRICAL RATINGS OF THE SWITCHGEAR ASSEMBLY. INSTALL FIELD INSULATION TO MAINTAIN THE ELECTRICAL RATINGS.

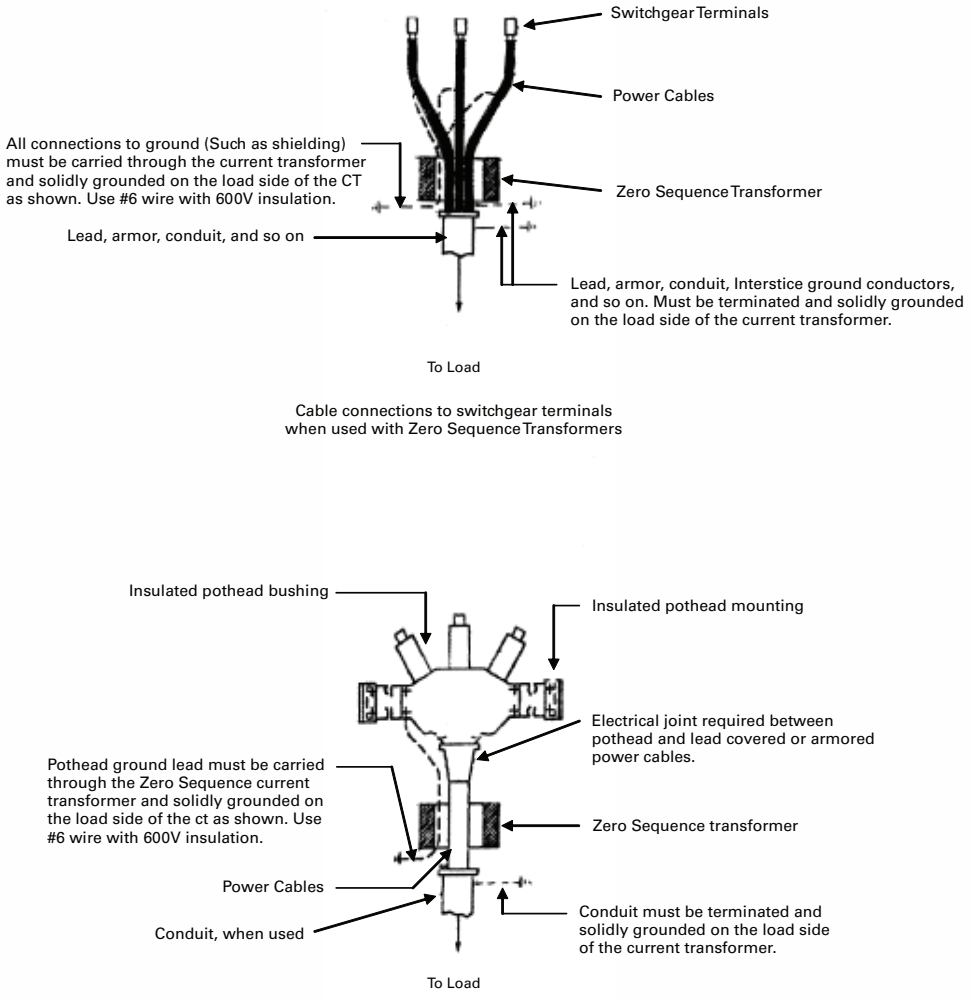

Figure 38. Zero Sequence Current Transformer Connections.

Instruction Booklet IB02200001E
Effective May 2018
Revision #4

Instructions for installation, operation, and maintenance of 5/15 kV type VacClad-W metal-clad switchgear indoor housings

Notes:

Instructions for installation, operation, and maintenance of 5/15 kV type VacClad-W metal-clad switchgear indoor housings

Instruction Booklet IB02200001E
Effective May 2018
Revision #4

Notes:

Eaton Medium Voltage Switchgear Manual

Instruction Booklet IB02200001E
Effective May 2018
Revision #4

Instructions for installation, operation, and maintenance of 5/15 kV type VacClad-W metal-clad switchgear indoor housings

Eaton
Electrical Sector
1000 Eaton Boulevard
Cleveland, OH 44122
United States
877-ETN-CARE (877-386-2273)
Eaton.com

© 2018 Eaton
All Rights Reserved
Printed in USA
Publication No. IB02200001E / TBG001214
May 2018

Powering Business Worldwide

Eaton is a registered trademark.

All other trademarks are property of their respective owners.

Instruction Booklet **IB131029EN**

Effective March 2022
Supersedes February 2022

Instructions for installation, operation, and maintenance of type VCP-W vacuum circuit breakers

Breaker types 50VCP-W, 75VCP-W, and 150VCP-W are located in IB131006EN. This IB includes the enhanced pole unit versions of these breakers and are listed as types 5VCP-W, 8VCP-W, and 15VCP-W in Tables 1 and 2.

Powering Business Worldwide

Instruction Booklet IB131029EN
Effective March 2022

Instructions for installation, operation, and maintenance of type VCP-W vacuum circuit breakers

⚠ WARNING

IMPROPERLY INSTALLING OR MAINTAINING THESE PRODUCTS CAN RESULT IN DEATH, SERIOUS PERSONAL INJURY, OR PROPERTY DAMAGE.

READ AND UNDERSTAND THESE INSTRUCTIONS BEFORE ATTEMPTING ANY UNPACKING, ASSEMBLY, OPERATION OR MAINTENANCE OF THE CIRCUIT BREAKERS.

INSTALLATION OR MAINTENANCE SHOULD BE ATTEMPTED ONLY BY QUALIFIED PERSONNEL. THIS INSTRUCTION BOOK SHOULD NOT BE CONSIDERED ALL INCLUSIVE REGARDING INSTALLATION OR MAINTENANCE PROCEDURES. IF FURTHER INFORMATION IS REQUIRED, YOU SHOULD CONTACT EATON.

⚠ WARNING

THE CIRCUIT BREAKER ELEMENTS DESCRIBED IN THIS BOOK ARE DESIGNED AND TESTED TO OPERATE WITHIN THEIR NAMEPLATE RATINGS. OPERATION OUTSIDE OF THESE RATINGS MAY CAUSE THE EQUIPMENT TO FAIL, RESULTING IN DEATH, SERIOUS PERSONAL INJURY, AND PROPERTY DAMAGE.

ALL SAFETY CODES, SAFETY STANDARDS, AND/OR REGULATIONS AS THEY MAY BE APPLIED TO THIS TYPE OF EQUIPMENT MUST BE STRICTLY ADHERED TO.

THESE CIRCUIT BREAKER ELEMENTS ARE DESIGNED TO BE INSTALLED PURSUANT TO THE AMERICAN NATIONAL STANDARDS INSTITUTE (ANSI). SERIOUS INJURY, INCLUDING DEATH, CAN RESULT FROM FAILURE TO FOLLOW THE PROCEDURES OUTLINED IN THIS MANUAL. THESE CIRCUIT BREAKER ELEMENTS ARE SOLD PURSUANT TO A NON-STANDARD PURCHASING AGREEMENT WHICH LIMITS THE LIABILITY OF THE MANUFACTURER.

These instructions do not purport to cover all possible contingencies, details, and variations which may arise during installation, operation or maintenance. If further information is desired by purchaser regarding his particular installation, operation or maintenance of particular equipment, contact an Eaton representative.

Instructions for installation, operation, and maintenance of type VCP-W vacuum circuit breakers

Instruction Booklet IB131029EN
Effective March 2022

Contents

Description	Page
1. Introduction	7
1.1 Preliminary comments and safety pre-cautions	7
1.1.1 Warranty and liability information	7
1.1.2 Safety precautions	7
1.2 General information	7
1.3 Type VCP-W vacuum circuit breaker ratings	8
1.4 Outlines and dimensions	18
2. Safe practices	21
2.1 Recommendations	22
3. Receiving, handling, and storage	21
3.1 General	21
3.2 Receiving	21
3.3 Handling	21
3.4 Storage	21
3.5 Switchgear foundation criteria	22
3.6 Shipping breakers in switchgear	22
3.7 Tools and accessories	23
3.8 Type VCP-W vacuum circuit breaker element weights (Tables 25, 26, and 27)	31
4. Initial inspection and installation	39
4.1 Introduction	39
4.2 Manual operation check	39
4.3 Vacuum interrupter integrity	39
4.4 Insulation	39
4.5 Contact erosion and wipe	39
4.6 Primary circuit resistance	39
4.7 Nameplate	39
4.8 Electrical operation check	39
4.8.1 Circuit breaker insertion and removal	39
4.8.2 Circuit breaker performance check	44
4.9 Circuit breaker/structure interfacing	45
4.9.1 Interface interlocks/interfacing check	45
5. Description and operation	47
5.1 Introduction	47
5.2 Interrupter assembly	47
5.2.1 Vacuum interrupter	48
5.2.2 Contact erosion indication	48
5.2.3 Loading spring indicator	48
5.2.4 Contact wipe and stroke	48
5.2.5 Phase barriers	48
5.3 Stored energy mechanism	50
5.3.1 Operation of stored energy mechanism	50
5.3.2 Charging	53
5.3.3 Closing operation	53
5.3.4 Tripping operation	53
5.3.5 Trip free operation	53
5.4 Control schemes	53
5.4.1 Timing	57
5.4.2 Secondary disconnects	57
5.4.3 Shunt trip device	57
5.4.4 Under-voltage trip device	57
5.5 Interlocks and interfacing	59
5.6 Levering mechanism	59
5.7 Operations counter	59

Instruction Booklet IB131029EN
Effective March 2022

Instructions for installation, operation, and maintenance of type VCP-W vacuum circuit breakers

5.8 Ground contact . . . 59
5.9 MOC and TOC switch operations . . . 59
6. Inspection, maintenance, and troubleshooting . . . 60
6.1 Introduction . . . 60
6.2 Frequency of inspection and maintenance . . . 60
6.2.1 Qualified personnel . . . 60
6.2.2 General torque guidelines . . . 61
6.3 Inspection and maintenance procedures . . . 62
6.4 Vacuum interrupter integrity test . . . 63
6.5 Contact erosion and wipe . . . 63
6.6 Insulation . . . 66
6.7 Insulation integrity check . . . 66
6.8 Primary circuit resistance check . . . 66
6.9 Mechanism check . . . 66
6.9.1 CloSure™ test . . . 66
6.10 Megger and power factor testing . . . 66
6.11 Mechanism lubrication . . . 70
6.12 Finger clusters and switchgear stab lubrication . . . 70
6.13 Main contacts to switchgear primary engagement . . . 70
6.14 How to determine the manufacturing date . . . 70
6.15 Troubleshooting chart . . . 71
6.16 End of life procedures . . . 71
6.17 Failure reporting . . . 71
7. Renewal parts . . . 72
7.1 General . . . 72
7.1.1 Ordering instructions . . . 72
8. Optional accessories . . . 92
8.1 Optional factory installed roll-on-floor wheel kit . . . 92
8.2 Optional automatic/manual hybrid secondary for BPI pan assembly . . . 92
8.3 Optional 3,000 A ball screw drive for BPI pan assembly . . . 94

List of figures

Figure Title **Page**

Figure 1. Type VCP-W (K = 1 & MVA) and VCPW-SE circuit breaker outlines and dimensions in inches (mm), enhanced pole unit shown . . . 18
Figure 2. Type 27 kV VCP-W, VCP-WC, and IEC circuit breaker outlines and dimensions in inches (mm) . . . 19
Figure 3. Type VCPW-ND circuit breaker outlines and dimensions in inches (mm) . . . 20
Figure 4. Typical VCP-W tools and accessories . . . 33
Figure 5. Typical front view VCP-W vacuum circuit breaker . . . 34
Figure 6. Typical VCP-W vacuum circuit breaker with front cover removed . . . 35
Figure 7. Typical rear view VCP-W 27 kV C-rated, IEC, and VCP-WXC . . . 36
Figure 8. Typical rear view VCP-W, 5/15 kV, k=1, MVA enhanced pole unit shown . . . 37
Figure 9. Typical VCP-W vacuum circuit breaker front cover arrangement . . . 38
Figure 10. Type VCP-W circuit breaker manual charging handle in use . . . 39
Figure 11. Insertion of the drawout extension rails . . . 40
Figure 12. Lifting and setting the breaker in the housing . . . 40
Figure 13. BPI pan assembly . . . 42
Figure 14. Non-BPI pan assembly . . . 43
Figure 15. Engaging extension rails in a lower circuit breaker compartment . . . 45
Figure 16. Typical VCP-W circuit breaker bottom view . . . 45
Figure 17. Pulling secondary disconnect cage to engage secondaries in TEST position (old version shown). New version will have BPI pan with automatic secondaries . . . 46
Figure 18. Engaging levering-in crank . . . 46
Figure 19. Typical VCP-W rear view showing vacuum interrupters and current carrying system . . . 47
Figure 20. Graphic representation of arc interruption . . . 48
Figure 21. Closing cam and trip linkage . . . 51

Instructions for installation, operation, and maintenance of type VCP-W vacuum circuit breakers

Instruction Booklet IB131029EN
Effective March 2022

Figure 22. Charging schematic. . . . 52
Figure 23. Typical VCP-W DC and AC control schemes. . . . 54
Figure 24. 15 kV VCP-WXC 63 kA 1200-3000 A special power plant breakers, styles: 4A35390G10, 4A35391G10, 4A35392G10 - DC control scheme and diagram. . . . 55
Figure 25 3 - 5 kV VCP-WXC 63 kA 1200-3000 A special power plant breakers, styles: 4A35390G10, 4A35391G10, 4A35392G10 - DC control scheme and diagram . . . 56
Figure 25. 15 kV under-voltage trip device configuration. . . . 58
Figure 26. Lubrication points. . . . 61
Figure 27. 50 VCP-W 63 - 63 kA pole unit. . . . 61
Figure 28. Vacuum interrupter showing contact erosion indicator with breaker open. . . . 64
Figure 29. Vacuum interrupter showing contact erosion indicator with breaker closed. . . . 64
Figure 30. Wipe indication procedure (performed only with the breaker closed). . . . 65
Figure 31. Starting tape at the bottom of the cam. . . . 67
Figure 32. Wrapping tape up around the cam. . . . 67
Figure 33. Attaching tape around to the back of the cam. . . . 67
Figure 34. Attaching CloSure test tool at hole "A". . . . 67
Figure 35. Attaching CloSure test tool at "B". . . . 67
Figure 36. Manually charging the closing springs. . . . 68
Figure 37. Manually closing the circuit breaker with the marker in hole "C". . . . 68
Figure 38. Top view of the cam and marker interface. . . . 68
Figure 39. Move marker 15° to the right. . . . 68
Figure 40. Move marker 15° to the left. . . . 68
Figure 41. Remove marked masking tape from the cam. . . . 69
Figure 42. Place the tape on the right side panel of the breaker. . . . 69
Figure 43. Illustrative testing tape sample. . . . 69
Figure 44. Front view of closure tool showing mounting/testing locations (6352C49H01). . . . 69
Figure 45. Typical circuit breaker front view with CloSure tool attached. . . . 69
Figure 46. Roll-on-floor wheel kit. . . . 92
Figure 47. Optional automatic/manual secondary for BPI pan assembly. . . . 93

List of tables

Table Title Page
Table 1. 5/15 kV VCP-W (k=1) vacuum circuit breaker types rated on symmetrical current rating basis, per ANSI standards. . . . 8
Table 2. 5/15 kV VCP-W (k=1) vacuum circuit breaker types rated on symmetrical current rating basis, per ANSI standards. . . . 9
Table 3. 27 kV VCP-W (k=1) vacuum circuit breaker types rated on symmetrical current rating basis, per ANSI standards . . . 10
Table 4. 27 kV VCP-WR (k=1) vacuum circuit breaker types rated on symmetrical current rating basis, per ANSI standards. . . . 12
Table 5. 5-27 kV VCP-WC (k=1) extra capability vacuum circuit breaker 5-27 kV rated symmetrical current basis, per ANSI standards. . . . 14
Table 6. 5/15 kV VCP-W (MVA) vacuum circuit breaker types rated on symmetrical current rating basis, per ANSI standards. . . . 15
Table 7. 5/15 kV VCP-W (MVA) vacuum circuit breaker types rated on symmetrical current rating basis, per ANSI standards. . . . 16
Table 8. 15 kV VCP-WXC (k=1) circuit breaker through 15 kV rated symmetrical current basis, per ANSI standards. . . . 16
Table 9. 5/15 kV VCP-WND (MVA) vacuum circuit breaker types rated on symmetrical current rating basis, per ANSI standards. . . . 17
Table 10. 5/15 kV VCP-WND (MVA) vacuum circuit breaker types rated on symmetrical current rating basis, per ANSI standards (continued). . . . 17
Table 11. (IEC-56 Standards) 17.5 kV VCP-W vacuum circuit breaker rated on symmetrical current basis. . . . 18
Table 12. Accessories for 36-inch wide breaker compartments for 29-inch frame breaker. . . . 24
Table 13. Narrow design accessories for 26-inch-wide breaker compartments. . . . 25
Table 14. 27 kV VCP-W accessories. . . . 26
Table 15. 15 kV simple manual ground and test devices—bus bar type. . . . 27
Table 16. 15 kV VCP-W simple manual ground and test device—"bail" and "ball" type. . . . 27

Table 17. 15 kV complex manual (selectable) ground and test device. . . . 27
Table 18. 15 kV simple electrically operated ground and test device. . . . 28
Table 19. 15 kV simple electrically operated ground and test device for VCP-W without key interlocks. 29
Table 20. 15 kV simple electrically operated ground and test device for VCP-WXC. . . . 29
Table 21. 15 kV VCP-W CEG&TD 1200/2000/3000 A - product code: 6078R. . . . 29
Table 22. 15 kV VCP-W CEG&TD accessories. . . . 30
Table 23. 27 kV manual ground and test device. . . . 30
Table 24. Dummy elements. . . . 31
Table 25. K=1 rated VCP-W breaker weights. . . . 31
Table 26. MVA Rated VCP-W breaker weights. . . . 32
Table 27. VCP-W IEC rated breaker weights. . . . 32
Table 28. VCP-W & VCP-WC circuit breaker barrier configurations. . . . 49
Table 29. Circuit breaker timing (made while the circuit breaker is levered to the CONNECTED position). . . . 57
Table 30. Torque guidelines. . . . 61
Table 31. Test voltage (insulation and vacuum integrity). . . . 63
Table 32. Typical resistance measurements. . . . 66
Table 33. Closure tool mounting/testing locations by circuit breaker type. . . . 70
Table 34. Recommended replacement parts for ANSI type VCP-W k=1 rated breakers. . . . 72
Table 35. Recommended replacement parts for ANSI type VCP-W MVA rated breakers. . . . 76
Table 36. Recommended replacement parts for ANSI type VCP-W 27 kV rated breakers. . . . 80
Table 37. Recommended replacement parts for ANSI type VCP-WC (Extra Capability) breakers 5-27 kV. . . . 82
Table 38. Recommended replacement parts for IEC type VCP-W rated breakers. . . . 85
Table 39. Recommended replacement parts for type VCP-W breakers. . . . 88

Instructions for installation, operation, and maintenance of type VCP-W vacuum circuit breakers

Instruction Booklet IB131029EN
Effective March 2022

1. Introduction

1.1 Preliminary comments and safety pre-cautions

This technical document is intended to cover most aspects associated with the installation, operation, and maintenance of Type VCP-W, VCPW-SE, VCP-WC,and VCPWND vacuum circuit breakers. Legacy VCP-W breakers are contained in IB131006EN and will be used for 50 Hz applications. It is provided as a guide for authorized and qualified personnel only. Please refer to the specific WARNING and CAUTION in Paragraph 1.1.2 before proceeding past Section 1. If further information is required by the purchaser regarding a particular installation, application, or maintenance activity, an Eaton representative should be contacted.

Legend of change

Legacy pole unit breakers	Enhanced pole unit breakers
50 VCP-W	5 VCP-W
75 VCP-W	8 VCP-W
150 VCP-W	15 VCP-W

Note: IEC and ND breakers - No change.

1.1.1 Warranty and liability information

NO WARRANTIES, EXPRESSED OR IMPLIED, INCLUDING WARRANTIES OF FITNESS FOR A PARTICULAR PURPOSE OF MERCHANTABILITY, OR WARRANTIES ARISING FROM COURSE OF DEALING OR USAGE OF TRADE, ARE MADE REGARDING THE INFORMATION, RECOMMENDATIONS AND DESCRIPTIONS CONTAINED HEREIN. In no event will Eaton be responsible to the purchaser or user in contract, in tort (including negligence), strict liability or otherwise for any special, indirect, incidental, or consequential damage or loss whatsoever, including but not limited to damage or loss of use of equipment, plant or power system, cost of capital, loss of power, additional expenses in the use of existing power facilities, or claims against the purchaser or user by its customers resulting from the use of the information and descriptions contained herein.

1.1.2 Safety precautions

All safety codes, safety standards, and/or regulations must be strictly observed in the installation, operation, and maintenance of this device.

⚠ WARNING

THE WARNINGS AND CAUTIONS INCLUDED AS PART OF THE PROCEDURAL STEPS IN THIS DOCUMENT ARE FOR PERSONNEL SAFETY AND PROTECTION OF EQUIPMENT FROM DAMAGE. AN EXAMPLE OF A TYPICAL WARNING LABEL HEADING IS SHOWN ABOVE TO FAMILIARIZE PERSONNEL WITH THE STYLE OF PRESENTATION. THIS WILL HELP TO INSURE THAT PERSONNEL ARE ALERT TO WARNINGS, WHICH MAY APPEAR THROUGHOUT THE DOCUMENT. IN ADDITION, CAUTIONS ARE ALL UPPER CASE AND BOLDFACE AS SHOWN BELOW.

⚠ CAUTION

COMPLETELY READ AND UNDERSTAND THE MATERIAL PRESENTED IN THIS DOCUMENT BEFORE ATTEMPTING INSTALLATION, OPERATION, OR APPLICATION OF THE EQUIPMENT. IN ADDITION, ONLY QUALIFIED PERSONS SHOULD BE PERMITTED TO PERFORM ANY WORK ASSOCIATED WITH THE EQUIPMENT. ANY WIRING INSTRUCTIONS PRESENTED IN THIS DOCUMENT MUST BE FOLLOWED PRECISELY. FAILURE TO DO SO COULD CAUSE PERMANENT EQUIPMENT DAMAGE.

1.2 General information

The purpose of this book is to provide instructions for unpacking, storage, use, operation, and maintenance of Type VCP-W, VCPW-SE, VCP-WC, and VCPW-ND vacuum circuit breakers. These circuit breakers are horizontal drawout type removable interrupting elements designed for use in VacClad-W Metal-Clad switchgear and appropriate VCP-W modules. They provide reliable control and protection for medium voltage electrical equipment and circuits. All VCP-W circuit breaker elements are designed to ANSI Standards for reliable performance, ease of handling, and simplified maintenance. In addition, some VCP-W circuit breakers have been tested in accordance with IEC Standards for applications around the world.

The VCPW-SE circuit breaker element is a VCP-W circuit breaker designed specifically for special environment applications and operating conditions through 27 kV. The VCPW-ND circuit breaker element is a narrow design VCP-W circuit breaker designed specifically for use in 5 kV applications where floor space requirements would not allow the industry standard 36 in. (914.4 mm) wide switchgear. From this point on, all circuit breaker elements will be referred to as Type VCP-W unless the reference is specific to a particular design. The VCP-WC circuit breaker element is a VCP-W circuit breaker designed and tested for extra capabilities beyond one or more of the preferred ratings of the applicable ANSI Standard.

⚠ WARNING

SATISFACTORY PERFORMANCE OF THESE BREAKERS IS CONTINGENT UPON PROPER APPLICATION, CORRECT INSTALLATION, AND ADEQUATE MAINTENANCE. THIS INSTRUCTION BOOK MUST BE CAREFULLY READ AND FOLLOWED IN ORDER TO OBTAIN OPTIMUM PERFORMANCE FOR LONG USEFUL LIFE OF THE CIRCUIT BREAKER ELEMENTS.

⚠ WARNING

THE CIRCUIT BREAKERS DESCRIBED IN THIS BOOK ARE DESIGNED AND TESTED TO OPERATE WITHIN THEIR NAMEPLATE RATINGS. OPERATION OUTSIDE OF THESE RATINGS MAY CAUSE THE EQUIPMENT TO FAIL, RESULTING IN DEATH, BODILY INJURY, AND PROPERTY DAMAGE.

Instruction Booklet IB131029EN
Effective March 2022

Instructions for installation, operation, and maintenance of type VCP-W vacuum circuit breakers

1.3 Type VCP-W vacuum circuit breaker ratings

Table 1. 5/15 kV VCP-W (k=1) vacuum circuit breaker types rated on symmetrical current rating basis, per ANSI standards.

Identification	Rated values ①②			Insulation level			Short-circuit ratings (reference C37.04-2018 and C37.09-2018 except where noted)							
Drawout circuit breaker type	Maximum voltage (V)	Nominal three-phase MVA class	Rated voltage range factor	Power frequency withstand voltage (1 min.)	Lightning impulse withstand voltage (1.2 x 50 µs)	Rated continuous current at 60 Hz	Symmetrical interrupting current (I)	%dc component	Asymmetrical interrupting current (It)	Closing and latching current	Short-time withstand current	Interrupting time	Interrupting time (cycles at 60 Hz)	No-load (mechanical endurance)
Units	kV rms		K	kV rms	kV peak	A rms ①③	kA rms sym	% (4)	kA rms asym. total④	kA peak ⑤	kA rms ⑥	ms	Cycles ⑦	⑧
5VCP-W25	4.76	N/A	1	19	60	1200	25	43	29	65	25	83/50	5/3	10,000
	4.76	N/A	1	19	60	2000	25	43	29	65	25	83/50	5/3	10,000
	4.76	N/A	1	19	60	3000	25	43	29	65	25	83/50	5/3	10,000
5VCP-W32	4.76	N/A	1	19	60	1200	31.5	43	37	82	31.5	83/50	5/3	10,000
	4.76	N/A	1	19	60	2000	31.5	43	37	82	31.5	83/50	5/3	10,000
	4.76	N/A	1	19	60	3000	31.5	43	37	82	31.5	83/50	5/3	10,000
5VCP-W40	4.76	N/A	1	19	60	1200	40	43	47	104	40	83/50	5/3	10,000
	4.76	N/A	1	19	60	2000	40	43	47	104	40	83/50	5/3	10,000
	4.76	N/A	1	19	60	3000	40	43	47	104	40	83/50	5/3	10,000
5VCP-W50	4.76	N/A	1	19	60	1200	50	43	58.5	130	50	83/50	5/3	10,000
	4.76	N/A	1	19	60	2000	50	43	58.5	130	50	83/50	5/3	10,000
	4.76	N/A	1	19	60	3000	50	43	58.5	130	50	83/50	5/3	10,000
50VCP-W63 ⑨	4.76	N/A	1	19	60	1200	63	55	80	164	63	83/50	5/3	10,000
	4.76	N/A	1	19	60	2000	63	55	80	164	63	83/50	5/3	10,000
	4.76	N/A	1	19	60	3000	63	55	80	164	63	83/50	5/3	10,000
8VCP-W40	8.25	N/A	1	36	95	1200	40	43	47	104	40	83/50	5/3	10,000
	8.25	N/A	1	36	95	2000	40	43	47	104	40	83/50	5/3	10,000
	8.25	N/A	1	36	95	3000	40	43	47	104	40	83/50	5/3	10,000
8VCP-W50	8.25	N/A	1	36	95	1200	50	43	58.5	130	50	83/50	5/3	10,000
	8.25	N/A	1	36	95	2000	50	43	58.5	130	50	83/50	5/3	10,000
	8.25	N/A	1	36	95	3000	50	43	58.5	130	50	83/50	5/3	10,000
15VCP-W25	15	N/A	1	36	95	1200	25	43	29	65	25	83/50	5/3	10,000
	15	N/A	1	36	95	2000	25	43	29	65	25	83/50	5/3	10,000
	15	N/A	1	36	95	3000	25	43	29	65	25	83/50	5/3	10,000
15VCP-W32	15	N/A	1	36	95	1200	31.5	43	37	82	31.5	83/50	5/3	10,000
	15	N/A	1	36	95	2000	31.5	43	37	82	31.5	83/50	5/3	10,000
	15	N/A	1	36	95	3000	31.5	43	37	82	31.5	83/50	5/3	10,000
15VCP-W40	15	N/A	1	36	95	1200	40	43	47	104	40	83/50	5/3	10,000
	15	N/A	1	36	95	2000	40	43	47	104	40	83/50	5/3	10,000
	15	N/A	1	36	95	3000	40	43	47	104	40	83/50	5/3	10,000
15VCP-W50	15	N/A	1	36	95	1200	50	43	58.5	130	50	83/50	5/3	10,000
	15	N/A	1	36	95	2000	50	43	58.5	130	50	83/50	5/3	10,000
	15	N/A	1	36	95	3000	50	43	58.5	130	50	83/50	5/3	10,000
150VCP-W63 ⑨	15	N/A	1	36	95	1200	63	55	80	164	63	83/50	5/3	10,000
	15	N/A	1	36	95	2000	63	55	80	164	63	83/50	5/3	10,000
	15	N/A	1	36	95	3000	63	55	80	164	63	83/50	5/3	10,000

① All circuit breakers are tested at 60 Hz and can not be applied at 50 Hz per C37.09-2018. If 50 Hz is required, use VCP-W Legacy breaker offering. Contact Eaton for required ratings.
② All breakers listed in this chart are UL Listed.
③ 3000 A rated breakers can be fan-cooled for use in 4000 A rated switchgear.
④ All breakers tested to C37.09-2018 meet the requirements for the last pole to clear during asymmetrical T100a tests defined by Table 2, and can safely be applied at the rated asymmetrical interrupting current and % dc offset as calculated by the equations within C37.09-2018 and C37.04-2018. Ratings are based on a dc time constant of 45 ms (corresponding to X/R of 17 for 60 Hz) and determined using the circuit breaker minimum opening time plus the assumed minimum relay time of ½ cycle (8.33 ms for 60 Hz).
⑤ These breakers were tested to (2.6 * I) for Close and Latch.
⑥ Duration of short-time current and maximum permissible tripping delay are both two seconds for all circuit breakers listed in this table, as required in C37.04-2018 and C37.09-2018.
⑦ All circuit breakers are available as 3 or 5 cycle breakers.
⑧ Each operation consists of one closing plus one opening.
⑨ These circuit breakers do not come with the upgraded pole units and were tested to earlier versions of the IEEE standards and can be applied at 50 Hz with no derating.

Instructions for installation, operation, and maintenance of type VCP-W vacuum circuit breakers

Instruction Booklet IB131029EN
Effective March 2022

Table 2. 5/15 kV VCP-W (k=1) vacuum circuit breaker types rated on symmetrical current rating basis, per ANSI standards.①

Identification	Rated values ②																
Drawout circuit breaker type	Continuous current	Operating duty	TRV peak voltage (E2) = (Uc)	TRV time to peak (T2 = t3 x 1.137)	TRV rise time (t3)	RRRV = uc/t3	Cable-charging	Cable-charging current	Isolated shunt capacitor bank	"Isolated shunt capacitor bank current"	Back-to-back capacitor bank	Back-to-back capacitor bank current	Inrush current	Inrush frequency	Out-of-phase voltage = 1.44 x V	Out-of-phase current = 0.25 x I
Units	A rms	Duty cycle③	kV peak	µsec	µsec	kV/ µsec	Class	A rms	Class	A rms	Class	A rms	kA peak	kHz	kV rms	kA rms
5VCP-W25	1200	O-0.3s-CO-3m-CO	8.2	50	44	0.19	C2	3-10	C2	75-630	C2	75-630	6	0.8	7	6.3
	2000	O-0.3s-CO-3m-CO	8.2	50	44	0.19	C2	3-10	C2	75-1000	C2	75-1000	6	0.5	7	6.3
	3000	O-0.3s-CO-3m-CO	8.2	50	44	0.19	C2	3-10	C2	75-1600	C2	75-1600	6	0.3	7	6.3
5VCP-W32	1200	O-0.3s-CO-3m-CO	8.2	50	44	0.19	C2	3-10	C2	75-630	C2	75-630	6	0.8	7	10
	2000	O-0.3s-CO-3m-CO	8.2	50	44	0.19	C2	3-10	C2	75-1000	C2	75-1000	6	0.5	7	10
	3000	O-0.3s-CO-3m-CO	8.2	50	44	0.19	C2	3-10	C2	75-1600	C2	75-1600	6	0.3	7	10
5VCP-W40	1200	O-0.3s-CO-3m-CO	8.2	50	44	0.19	C2	3-10	C2	75-630	C2	75-630	6	0.8	7	10
	2000	O-0.3s-CO-3m-CO	8.2	50	44	0.19	C2	3-10	C2	75-1000	C2	75-1000	6	0.5	7	10
	3000	O-0.3s-CO-3m-CO	8.2	50	44	0.19	C2	3-10	C2	75-1600	C2	75-1600	6	0.3	7	10
5VCP-W50	1200	O-0.3s-CO-3m-CO	8.2	50	44	0.19	C2	3-10	C2	75-630	C2	75-630	6	0.8	7	12.5
	2000	O-0.3s-CO-3m-CO	8.2	50	44	0.19	C2	3-10	C2	75-1000	C2	75-1000	6	0.5	7	12.5
	3000	O-0.3s-CO-3m-CO	8.2	50	44	0.19	C2	3-10	C2	75-1600	C2	75-1600	6	0.3	7	12.5
50VCP-W63④	1200	O-0.3s-CO-3m-CO	8.2	50	44	0.19	C2	7.5-25	C2	75-630	C2	75-630	6	0.8	7	15.8
	2000	O-0.3s-CO-3m-CO	8.2	50	44	0.19	C2	7.5-25	C2	75-1000	C2	75-1000	6	0.5	7	15.8
	3000	O-0.3s-CO-3m-CO	8.2	50	44	0.19	C2	7.5-25	C2	75-1600	C2	75-1600	6	0.3	7	15.8
8VCP-W40	1200	O-0.3s-CO-3m-CO	14.1	59	52	0.27	C2	7.5-25	C2	75-630	C2	75-630	6	0.8	12	10
	2000	O-0.3s-CO-3m-CO	14.1	59	52	0.27	C2	7.5-25	C2	75-1000	C2	75-1000	6	0.5	12	10
	3000	O-0.3s-CO-3m-CO	14.1	59	52	0.27	C2	7.5-25	C2	75-1600	C2	75-1600	6	0.3	12	10
8VCP-W50	1200	O-0.3s-CO-3m-CO	14.1	59	52	0.27	C2	7.5-25	C2	75-630	C2	75-630	6	0.8	12	12.5
	2000	O-0.3s-CO-3m-CO	14.1	59	52	0.27	C2	7.5-25	C2	75-1000	C2	75-1000	6	0.5	12	12.5
	3000	O-0.3s-CO-3m-CO	14.1	59	52	0.27	C2	7.5-25	C2	75-1600	C2	75-1600	6	0.3	12	12.5
15VCP-W25	1200	O-0.3s-CO-3m-CO	25.7	75	66	0.39	C2	7.5-25	C2	75-630	C2	75-630	6	0.8	22	6.3
	2000	O-0.3s-CO-3m-CO	25.7	75	66	0.39	C2	7.5-25	C2	75-1000	C2	75-1000	6	0.5	22	6.3
	3000	O-0.3s-CO-3m-CO	25.7	75	66	0.39	C2	7.5-25	C2	75-1600	C2	75-1600	6	0.3	22	6.3
15VCP-W32	1200	O-0.3s-CO-3m-CO	25.7	75	66	0.39	C2	7.5-25	C2	75-630	C2	75-630	6	0.8	22	10
	2000	O-0.3s-CO-3m-CO	25.7	75	66	0.39	C2	7.5-25	C2	75-1000	C2	75-1000	6	0.5	22	10
	3000	O-0.3s-CO-3m-CO	25.7	75	66	0.39	C2	7.5-25	C2	75-1600	C2	75-1600	6	0.3	22	10
15VCP-W40	1200	O-0.3s-CO-3m-CO	25.7	75	66	0.39	C2	7.5-25	C2	75-630	C2	75-630	6	0.8	22	10
	2000	O-0.3s-CO-3m-CO	25.7	75	66	0.39	C2	7.5-25	C2	75-1000	C2	75-1000	6	0.5	22	10
	3000	O-0.3s-CO-3m-CO	25.7	75	66	0.39	C2	7.5-25	C2	75-1600	C2	75-1600	6	0.3	22	10
15VCP-W50	1200	O-0.3s-CO-3m-CO	25.7	75	66	0.39	C2	7.5-25	C2	75-630	C2	75-630	6	0.8	22	12.5
	2000	O-0.3s-CO-3m-CO	25.7	75	66	0.39	C2	7.5-25	C2	75-1000	C2	75-1000	6	0.5	22	12.5
	3000	O-0.3s-CO-3m-CO	25.7	75	66	0.39	C2	7.5-25	C2	75-1600	C2	75-1600	6	0.3	22	12.5
150VCP-W63④	1200	O-0.3s-CO-3m-CO	28	75	66	0.39	C2	7.5-25	C2	75-630	C2	75-630	6	0.8	22	15.8
	2000	O-0.3s-CO-3m-CO	28	75	66	0.39	C2	7.5-25	C2	75-1000	C2	75-1000	6	0.5	22	15.8
	3000	O-0.3s-CO-3m-CO	28	75	66	0.39	C2	7.5-25	C2	75-1600	C2	75-1600	6	0.3	22	15.8

① Circuit breakers shown in this table were tested in accordance with IEEE standard C37.09-2018.
② All circuit breakers were tested at 60 Hz, and can not be applied at 50 Hz per C37.09-2018. If 50 Hz is required, use VCP-W Legacy breaker offering. Contact Eaton for required ratings.
③ For reclosing service, there is No derating necessary for Eaton's VCP-W family of circuit breakers. R = 100 % Type VCP-W breaker can perform the O-C-O per IEEE C37.09; O-0.3s-CO-15s-CO per IEC 56; and some VCP-Ws have performed O-0.3s-CO-15s-CO-15s-CO-15s-CO; all with no derating. Contact Eaton for special reclosing requirements.
④ These circuit breakers do not come with the upgraded pole units and were tested to earlier versions of the IEEE standards and can be applied at 50 Hz with no derating.

Instruction Booklet IB131029EN
Effective March 2022

Table 3. 27 kV VCP-W (k=1) vacuum circuit breaker types rated on symmetrical current rating basis, per ANSI standards (continued on next page).

Identification	Rated values①						Short-circuit ratings (reference C37.04-1999 and C37.06-2009 except as noted①)							
Drawout circuit breaker type	Maximum voltage (V)	Nominal three-phase MVA class	Rated voltage range factor	Insulation level: Power frequency withstand voltage (1 min.)	Insulation level: Lightning impulse withstand voltage (1.2 x 50 µs)	Rated continuous current at 60 Hz	Symmetrical interrupting current (I)	% dc component	Asymmetrical interrupting current (It)	Closing and latching current	Short-time withstand current	Interrupting time	Interrupting time (cycles at 60 Hz)	No-load (mechanical endurance)
Units	kV rms		K	kV rms	kV peak	A rms	kA rms sym.②	%③	kA rms asym. total④	kA peak⑤	kA rms⑥	ms	Cycles	⑦
270 VCP-W 16	27 27 27	750 750 750	1 1 1	60 60 60	125 125 125	600 1200 2000	16 16 16	50 50 50	19.5 19.5 19.5	43 43 43	16 16 16	50 or 83 50 or 83 50 or 83	3 or 5 3 or 5 3 or 5	2500 2500 2500
270 VCP-W 22	27 27 27	1000 1000 1000	1 1 1	60 60 60	125 125 125	600 1200 2000	22 22 22	50 50 50	26.8 26.8 26.8	59 59 59	22 22 22	50 or 83 50 or 83 50 or 83	3 or 5 3 or 5 3 or 5	2500 2500 2500
270 VCP-W 25	27 27 27	1250 1250 1250	1 1 1	60 60 60	125 125 125	600 1200 2000	25 25 25	50 50 50	30.5 30.5 30.5	68 68 68	25 25 25	50 or 83 50 or 83 50 or 83	3 or 5 3 or 5 3 or 5	2500 2500 2500
270 VCP-W 32	27 27	1500 1500	1 1	60 60	125 125	1200 2000	31.5 31.5	50 50	38.4 38.4	85 85	31.5 31.5	50 or 83 50 or 83	3 or 5 3 or 5	2500 2500
270 VCP-W 40	27 27	1870 1870	1 1	60 60	125 125	1200 2000	40 40	50 50	48.8 48.8	106 106	40 40	50 or 83 50 or 83	3 or 5 3 or 5	2500 2500
270 VCP-W 25C	27 27	1200 1600	1 1	60 60	125 125	1200 1600	25 25	75 75	36 36	85 85	25 25	50 50	3 3	5000 5000
270 VCP-W 32C	27 27	1200 1600	1 1	60 60	125 125	1200 1600	31.5 31.5	55 55	40 40	100 100	31.5 31.5	50 50	3 3	5000 5000
270 VCP-W 40C	27 27	1200 1600	1 1	60 60	125 125	1200 1600	40 40	50 50	49 49	112 112	40 40	50 50	3 3	5000 5000

① All circuit breakers are tested at 60 Hz; however, they can also be applied at 50 Hz with no derating.
② Because the voltage range factor K = 1, the short-time withstand current and the maximum symmetrical interrupting current are equal to the rated symmetrical interrupting current.
③ Based on the standard dc time constant of 45 ms (corresponding to X/R of 17 for 60 Hz) and the minimum contact parting time as determined from the minimum opening time plus the assumed minimum relay time of 1/2 cycle (8.33 ms for 60 Hz).
④ The asymmetrical interrupting current, I total, is given by (I_t) = I x Sqrt (1 + 2 x % dc x % dc) kA rms asymmetrical total.
⑤ K=1 breakers were tested to 2.6 * I and K>1 breakers were tested to 2.7 * I.
⑥ Duration of short-time current and maximum permissible tripping delay are both two seconds for all circuit breakers listed in this table, as required in C37.04-1999, C37.06-2000 and C37.06-2009.
⑦ Each operation consists of one closing plus one opening.

Instructions for installation, operation, and maintenance of type VCP-W vacuum circuit breakers

Instruction Booklet IB131029EN
Effective March 2022

Table 3. 27 kV VCP-W (k=1) vacuum circuit breaker types rated on symmetrical current rating basis, per ANSI standards.①

Identification	Rated values②															
Drawout circuit breaker type	Continuous current	Operating duty	TRV peak voltage (E2) = (Uc)	TRV time to peak (T2 = t3 x 1.137)	TRV rise time (t3)	RRRV = uc/t3	Cable-charging④	Cable-charging current	Isolated shunt capacitor bank④	Isolated shunt capacitor bank current	Back-to-back capacitor bank current④	Back-to-back capacitor bank current	Inrush current	Inrush frequency	Out-of-phase voltage = 1.44 x V	Out-of-phase current = 0.25 x I
Units	A rms	Duty cycle③	kV peak	µsec	µsec	kV/µsec	Class	A rms	Class	A rms	Class	A rms	kA peak	kHz	kV rms	kA rms
270 VCP-W 16	600	CO-15s-CO	51	105	92.3	0.55	—	—	—	—	—	—	—	—	—	—
	1200	CO-15s-CO	51	105	92.3	0.55	—	—	—	—	—	—	—	—	—	—
	2000	CO-15s-CO	51	105	92.3	0.55	—	—	—	—	—	—	—	—	—	—
270 VCP-W 22	600	CO-15s-CO	51	105	92.3	0.55	—	—	—	—	—	—	—	—	—	—
	1200	CO-15s-CO	51	105	92.3	0.55	—	—	—	—	—	—	—	—	—	—
	2000	CO-15s-CO	51	105	92.3	0.55	—	—	—	—	—	—	—	—	—	—
270 VCP-W 25	600	CO-15s-CO	51	105	92.3	0.55	—	—	—	—	—	—	—	—	—	—
	1200	CO-15s-CO	51	105	92.3	0.55	—	—	—	—	—	—	—	—	—	—
	2000	CO-15s-CO	51	105	92.3	0.55	—	—	—	—	—	—	—	—	—	—
270 VCP-W 32	1200	CO-15s-CO	51	52	45.7	1.12	DP	31.5	GP	160	—	—	—	—	—	—
	2000	CO-15s-CO	51	52	45.7	1.12	DP	31.5	GP	160	—	—	—	—	—	—
270 VCP-W 40	1200	CO-15s-CO	51	52	45.7	1.12	DP	31.5	GP	160	—	—	—	—	—	—
	2000	CO-15s-CO	51	52	45.7	1.12	DP	31.5	GP	160	—	—	—	—	—	—
270 VCP-W 25C	1200	O-0.3s-CO-15s-CO	50	50	44	1.14	—	—	GP	400	DP	400	20	4.2	—	—
	1600	O-0.3s-CO-15s-CO	50	50	44	1.14	—	—	GP	400	DP	400	20	4.2	—	—
270 VCP-W 32C	1200	O-0.3s-CO-15s-CO	50	50	44	1.14	—	—	GP	400	DP	400	20	4.2	—	—
	1600	O-0.3s-CO-15s-CO	50	50	44	1.14	—	—	GP	400	DP	400	20	4.2	—	—
270 VCP-W 40C	1200	O-0.3s-CO-15s-CO	50	50	44	1.14	—	—	GP	400	DP	400	20	4.2	—	—
	1600	O-0.3s-CO-15s-CO	50	50	44	1.14	—	—	GP	400	DP	400	20	4.2	—	—

① Circuit breakers shown in this table were tested in accordance with IEEE standard C37.09-1979.
② All circuit breakers are tested at 60 Hz; however, they can also be applied at 50 Hz with no derating.
③ For reclosing service, there is No derating necessary for Eaton's VCP-W family of circuit breakers. R = 100%. Contact Eaton for special reclosing requirements.
④ General Purpose (GP) and Definite Purpose (DP) are defined in C37.09-1999. Based on the definitions of these terms, GP is similar to C0 and DP is similar to C1 as defined in C37.09a-2005.

Instruction Booklet IB131029EN
Effective March 2022

Table 4. 27 kV VCP-WR (k=1) vacuum circuit breaker types rated on symmetrical current rating basis, per ANSI standards (continued on next page)

Identification	Rated values①													
Drawout circuit breaker type				Insulation level			Short-circuit ratings (reference C37.04-1999 and C37.06-2009 except as noted①)							
	Maximum	Nominal MVA class	Rated voltage	Power frequency (1 min.)	Lightning impulse (1.2 x 50 µs)	Rated continuous current at 60 Hz	Symmetrical Current (I)	% dc	Asymmetrical current (It)	Closing and latching current	Short-time current	Interrupting time	Interrupting time (cycles at 60 Hz)	No-load mechanical endurance)
Units	kV rms		K	kV rms	kV peak	A rms	kA rms sym.②	%③	kA rms asym. total④	kA peak⑤	kA rms⑥	ms	Cycles⑦	⑧
270 VCP-WR 16	27	750	1	60	125	600	16	50	19.5	43	16	83 or 50	5 or 3	2500
	27	750	1	60	125	1200	16	50	19.5	43	16	83 or 50	5 or 3	2500
	27	750	1	60	125	2000	16	50	19.5	43	16	83 or 50	5 or 3	2500
270 VCP-WR 22	27	1000	1	60	125	600	22	50	26.8	59	22	83 or 50	5 or 3	2500
	27	1000	1	60	125	1200	22	50	26.8	59	22	83 or 50	5 or 3	2500
	27	1000	1	60	125	2000	22	50	26.8	59	22	83 or 50	5 or 3	2500
270 VCP-WR 25	27	1250	1	60	125	600	25	50	30.5	68	25	83 or 50	5 or 3	2500
	27	1250	1	60	125	1200	25	50	30.5	68	25	83 or 50	5 or 3	2500
	27	1250	1	60	125	2000	25	50	30.5	68	25	83 or 50	5 or 3	2500
270 VCP-WR 32	27	1500	1	60	125	1200	31.5	50	38.4	85	31.5	83 or 50	5 or 3	2500
	27	1500	1	60	125	2000	31.5	50	38.4	85	31.5	83 or 50	5 or 3	2500
270 VCP-WR 40	27	1870	1	60	125	1200	40	50	48.8	106	40	83 or 50	5 or 3	2500
	27	1870	1	60	125	2000	40	50	48.8	106	40	83 or 50	5 or 3	2500
270 VCP-WR 25C	27	—	1	60	125	1200	25	75	36	85	25	83 or 50	5 or 3	5000
	27	—	1	60	125	2000	25	75	36	85	25	83 or 50	5 or 3	5000
270 VCP-WR 32C	27	—	1	60	125	1200	31.5	55	40	100	31.5	83 or 50	5 or 3	5000
	27	—	1	60	125	2000	31.5	55	40	100	31.5	83 or 50	5 or 3	5000
270 VCP-WR 40C	27	—	1	60	125	1200	40	50	49	112	40	83 or 50	5 or 3	5000
	27	—	1	60	125	2000	40	50	49	112	40	83 or 50	5 or 3	5000

① All circuit breakers are tested at 60 Hz; however, they can also be applied at 50 Hz with no derating.
② Because the voltage range factor K = 1, the short-time withstand current and the maximum symmetrical interrupting current are equal to the rated symmetrical interrupting current.
③ Based on the standard dc time constant of 45 ms (corresponding to X/R of 17 for 60 Hz) and the minimum contact parting time as determined from the minimum opening time plus the assumed minimum relay time of 1/2 cycle (8.33 ms for 60 Hz).
④ The asymmetrical interrupting current, I total, is given by $(I_t) = I \times Sqrt(1 + 2 \times \%\ dc \times \%\ dc)$ kA rms asymmetrical total.
⑤ K=1 breakers were tested to 2.6 * I and K>1 breakers were tested to 2.7 * I.
⑥ Duration of short-time current and maximum permissible tripping delay are both two seconds for all circuit breakers listed in this table, as required in C37.04-1999, C37.06-2000 and C37.06-2009.
⑦ All circuit breakers are available as 3 or 5 cycle breakers.
⑧ Each operation consists of one closing plus one opening.

Instructions for installation, operation, and maintenance of type VCP-W vacuum circuit breakers

Instruction Booklet IB131029EN
Effective March 2022

Table 4: 27 kV VCP-WR (k=1) vacuum circuit breaker types rated on symmetrical current rating basis, per ANSI standards.

Identification	Rated values②															
Drawout circuit breaker type	Continuous current	Operating duty	TRV peak voltage (E2) = (Uc)	TRV time to peak (T2 = t3 x 1.137)	TRV rise time (t3)	RRRV = uc/t3	Cable-charging④	Cable-charging current	Isolated shunt capacitor bank④	Isolated shunt capacitor bank current	Back-to-back capacitor bank current④	Back-to-back capacitor bank current	Inrush current	Inrush frequency	Out-of-phase voltage = 1.44 x V	Out-of-phase current = 0.25 x I
Units	A rms	Duty cycle③	kV peak	µsec	µsec	kV/µsec	Class	A rms	Class	A rms	Class	A rms	kA peak	kHz	kV rms	kA rms
270 VCP-WR 16	600	CO-15s-CO	51	105	92.3	0.55	—	—	—	—	—	—	—	—	—	—
	1200	CO-15s-CO	51	105	92.3	0.55	—	—	—	—	—	—	—	—	—	—
	2000	CO-15s-CO	51	105	92.3	0.55	—	—	—	—	—	—	—	—	—	—
270 VCP-WR 22	600	CO-15s-CO	51	105	92.3	0.55	—	—	—	—	—	—	—	—	—	—
	1200	CO-15s-CO	51	105	92.3	0.55	—	—	—	—	—	—	—	—	—	—
	2000	CO-15s-CO	51	105	92.3	0.55	—	—	—	—	—	—	—	—	—	—
270 VCP-WR 25	600	CO-15s-CO	51	105	92.3	0.55	—	—	—	—	—	—	—	—	—	—
	1200	CO-15s-CO	51	105	92.3	0.55	—	—	—	—	—	—	—	—	—	—
	2000	CO-15s-CO	51	105	92.3	0.55	—	—	—	—	—	—	—	—	—	—
270 VCP-WR 32	1200	CO-15s-CO	51	52	45.7	1.12	DP	31.5	GP	160	—	—	—	—	—	—
	2000	CO-15s-CO	51	52	45.7	1.12	DP	31.5	GP	160	—	—	—	—	—	—
270 VCP-WR 40	1200	CO-15s-CO	51	52	45.7	1.12	DP	31.5	GP	160	—	—	—	—	—	—
	2000	CO-15s-CO	51	52	45.7	1.12	DP	31.5	GP	160	—	—	—	—	—	—
270 VCP-WR 25C	1200	O-0.3s-CO-15s-CO	50	50	44	1.14	—	—	GP	400	DP	400	20	4.2	—	—
	2000	O-0.3s-CO-15s-CO	50	50	44	1.14	—	—	GP	400	DP	400	20	4.2	—	—
270 VCP-WR 32C	1200	O-0.3s-CO-15s-CO	50	50	44	1.14	—	—	GP	400	DP	400	20	4.2	—	—
	2000	O-0.3s-CO-15s-CO	50	50	44	1.14	—	—	GP	400	DP	400	20	4.2	—	—
270 VCP-WR 40C	1200	O-0.3s-CO-15s-CO	50	50	44	1.14	—	—	GP	400	DP	400	20	4.2	—	—
	2000	O-0.3s-CO-15s-CO	50	50	44	1.14	—	—	GP	400	DP	400	20	4.2	—	—

① Circuit breakers shown in this table were tested in accordance with IEEE standard C37.09-1979.
② All circuit breakers are tested at 60 Hz; however, they can also be applied at 50 Hz with no derating.
③ For reclosing service, there is No derating necessary for Eaton's VCP-W family of circuit breakers. R = 100%. Contact Eaton for special reclosing requirements.
④ General Purpose (GP) and Definite Purpose (DP) are defined in C37.09-1999. Based on the definitions of these terms, GP is similar to C0 and DP is similar to C1 as defined in C37.09a-2005.

Instruction Booklet IB131029EN
Effective March 2022

Table 5. 5-27 kV VCP-WC (k=1) extra capability vacuum circuit breaker rated symmetrical current basis, per ANSI standards.

Identification	Rated voltage																		
Circuit breaker type	Voltage		Insulation level withstand test		Continuous current at 60 Hz	Short circuit current					Interrupting time ①	Max. permissible tripping delay	Transient recovery voltage (RRRV) ③	Capacitor switching ratings				Mechanical endurance
														General purpose	Definite purpose			
															Back to back capacitor switching			
	Max. voltage V	Voltage range factor K	Power frequency (1 min.)	Lightening impulse 1.2x50us		Sym interrupting at V (Isc)	% DC component (Idc)	Asym. interrupting (It)	Closing & latching capability	Short- time current for 3 sec.				Isolated shunt capacitor bank current	Capacitor bank current	Inrush current	Inrush frequency	No-load operations
	KV rms		kV rms	kV peak	A rms	kA rms total	%	kA rms	kA peak	kA rms	Cycles	Sec.	kV / µs	A rms	A rms	kA peak	kHz	
50 VCP-W 40C	5.95	1	24	75	1200 2000 3000	40	75.	58	139	40	3	2	0.9 0.9 0.8		630⑤ 1000⑤ —	15 18 —	3.5 2.7 —	10,000 10,000 5,000
50 VCP-W 50C	5.95	1	24	75	1200 2000 3000	50	57 57 52	64 64 62	139	50	3	2	0.9 0.9 0.8		630⑤ 1000⑤ —	15 18 —	3.5 2.7 —	10,000 10,000 5,000
75 VCP-W 50C	10.3	1	42	95	1200 2000 3000	50	57 57 52	64 64 62	139	50	3	2	0.9 0.9 0.8		630⑤ 1000⑤ —	15 18 —	3.5 2.7 —	10,000 10,000 5,000
150 VCP-W 25C	17.5	1	42	95	1200 2000 3000	25	50 75 75	31 36 36	97 ②	25	3	2	0.95 0.9 0.8		600④ 1000⑤⑥ —	20 18 —	3.5 2.7 —	10,000 10,000 5,000
150 VCP-W 40C	17.5	1	42	95	1200 2000 3000	40	75	58	139	40	3	2	0.9 0.9 0.8	630 ④ 630 ④ 250 ④	630⑤⑥ 1000⑤⑥ —	15 18 —	3.5 2.7 —	10,000 10,000 5,000
150 VCP-W 50C	17.5	1	42	95	1200 2000 3000	50	57 57 52	64 64 62	139	50	3	2	0.9 0.9 0.8	630 ④ 630 ④ 250 ④	630⑤⑥ 1000⑤⑥ —	15 18 —	3.5 2.7 —	10,000 10,000 5,000
150 VCP-W 63C	17.5	1	42	95	1200 2000 3000	63	61 61 61	83 83 83	175	63	3	2	1.07 1.07 1.07		200, 1600⑨ 200, 1600⑨ 200, 1600⑨	7.7 7.7 7.7	465 465 465	10,000 10,000 10,000
270 VCP-W 25C	27	1	60	125	1200 1600	25	75	36	85	25⑧	3	2	1.1		400	20	4.2	2,500
270 VCP-W 32C	27	1	60	125	1200 1600	31.5	57	40	97	32⑦	3	1	1.1		400	20	4.2	2,500
270 VCP-W 40C	27	1	60	125	1200 1600	40	50	49	104	40⑦	3	1	1.1		400	20	4.2	2,500

① 3 cycles
② Close & latch current for 1200 A Type 150 VCP-W 25C is proven at 15 kV. For sealed interrupters at high altitudes, switching voltage is not de-rated.
③ For higher RRRV contact Eaton for more information.
④ Breaker tested to 2700 A single bank switching for momentary load (Thermal derating must consider harmonic content of current waveform).
⑤ Breaker tested to 1270 A back-to-back switching for momentary load (Thermal derating must consider harmonic content of current waveform)
⑥ Capacitor switching ratings are proven at 15 kV. For sealed interrupters at high altitudes, switching voltage is not de-rated.
⑦ 1 second
⑧ 2 second
⑨ C37.04a-2003 class C2 @ 15 kV

Instructions for installation, operation, and maintenance of type VCP-W vacuum circuit breakers

Instruction Booklet IB131029EN
Effective March 2022

Table 6. 5/15 kV VCP-W (MVA) vacuum circuit breaker types rated on symmetrical current rating basis, per ANSI standards.

Identification	Rated values①②			Insulation level			Short-circuit ratings (reference C37.04-1999 and C37.06-2009 except as noted)①							
Drawout circuit breaker type	Maximum voltage (V)	Nominal three-phase MVA class	Rated voltage range factor	Power frequency withstand voltage (1 min.)	Lightning impulse withstand voltage (1.2 x 50 µs)	Rated continuous current at 60 Hz	Symmetrical interrupting current (I)	%dc Component	Asymmetrical interrupting current (It)	Closing and latching current	Short-time withstand current	Interrupting time	Interrupting time (cycles at 60 Hz)	No-load (mechanical endurance)
Units	kV rms		K	kV rms	kV peak	A rms①③	kA rms sym.	%④	kA rms asym. total④	kA peak⑤	kA rms⑥	ms	Cycles⑦	⑧
5VCP-W250	4.76	250	1	19	60	1200	36	40	41	97	36	83/50	5/3	10,000
	4.76	250	1	19	60	2000	36	40	41	97	36	83/50	5/3	10,000
	4.76	250	1	19	60	3000	36	39	41	97	36	83/50	5/3	10,000
5VCP-W350	4.76	350	1	19	60	1200	49	40	56	132	49	83/50	5/3	10,000
	4.76	350	1	19	60	2000	49	40	56	132	49	83/50	5/3	10,000
	4.76	350	1	19	60	3000	49	39	56	132	49	83/50	5/3	10,000
8VCP-W500	8.25	500	1	36	95	1200	41	40	47	108	41	83/50	5/3	10,000
	8.25	500	1	36	95	2000	41	40	47	108	41	83/50	5/3	10,000
	8.25	500	1	36	95	3000	41	39	47	111	41	83/50	5/3	10,000
15VCP-W500	15	500	1	36	95	1200	23	41	26	62	23	83/50	5/3	10,000
	15	500	1	36	95	2000	23	41	26	62	23	83/50	5/3	10,000
	15	500	1	36	95	3000	23	39	26	62	23	83/50	5/3	10,000
15VCP-W750	15	750	1	36	95	1200	36	40	41	97	36	83/50	5/3	10,000
	15	750	1	36	95	2000	36	40	41	97	36	83/50	5/3	10,000
	15	750	1	36	95	3000	36	39	41	97	36	83/50	5/3	10,000
15VCP-W1000	15	1000	1	36	95	1200	48	40	55	130	48	83/50	5/3	10,000
	15	1000	1	36	95	2000	48	40	55	130	48	83/50	5/3	10,000
	15	1000	1	36	95	3000	48	39	55	130	48	83/50	5/3	10,000

① All circuit breakers are tested at 60 Hz and can not be applied at 50 Hz per C37.09-2018. If 50 Hz is required use VCP-W Legacy breaker offering. Contact Eaton for required ratings.

② All breakers listed in this chart are UL Listed.

③ 3000 A rated breakers can be fan-cooled for use in 4000 A rated switchgear.

④ All breakers tested to C37.09-2018 meet the requirements for the last pole to clear during asymmetrical T100a tests defined by Table 2, and can safely be applied at the rated asymmetrical interrupting current and % dc offset as calculated by the equations within C37.09-2018 and C37.04-2018. Ratings are based on a dc time constant of 45 ms (corresponding to X/R of 17 for 60 Hz) and determined using the circuit breaker minimum opening time plus the assumed minimum relay time of ½ cycle (8.33 ms for 60 Hz).

⑤ These breakers were tested to (2.6 * I) for Close and Latch.

⑥ Duration of short-time current and maximum permissible tripping delay are both two seconds for all circuit breakers listed in this table, as required in C37.04-2018 and C37.09-2018.

⑦ All circuit breakers are available as 3 or 5 cycle breakers.

⑧ Each operation consists of one closing plus one opening.

Instruction Booklet IB131029EN
Effective March 2022

Instructions for installation, operation, and maintenance of type VCP-W vacuum circuit breakers

Table 7. 5/15 kV VCP-W (MVA) vacuum circuit breaker types rated on symmetrical current rating basis, per ANSI standards.①

Identification	Rated values②																
Drawout circuit breaker type	Continuous current	Operating duty	TRV peak voltage (E2) = (Uc)	TRV time to peak (T2 = t3 x 1.137)	TRV rise time (t3)	RRRV = uc/t3	Cable-charging	Cable-charging current	Isolated shunt capacitor bank	Isolated shunt capacitor bank current	Back-to-back capacitor bank	Back-to-back capacitor bank current	Inrush current	Inrush frequency	Out-of-phase voltage = 1.44 x V	Out-of-phase current = 0.25 x I
Units	A rms	Duty cycle③	kV peak	µsec	µsec	kV/µsec	Class	A rms	Class	A rms	Class	A rms	kA peak	kHz	kV rms	kA rms
5VCP-W250	1200	O-0.3s-CO-3m-CO	8.9	50	44	0.20	C2	3-10	C2	75-630	C2	75-630	6	0.8	7	10
	2000	O-0.3s-CO-3m-CO	8.9	50	44	0.20	C2	3-10	C2	75-1000	C2	75-1000	6	0.5	7	10
	3000	O-0.3s-CO-3m-CO	8.9	50	44	0.20	C2	3-10	C2	75-1600	C2	75-1600	6	0.3	7	10
5VCP-W350	1200	O-0.3s-CO-3m-CO	8.9	50	44	0.20	C2	3-10	C2	75-630	C2	75-630	6	0.8	7	12.5
	2000	O-0.3s-CO-3m-CO	8.9	50	44	0.20	C2	3-10	C2	75-1000	C2	75-1000	6	0.5	7	12.5
	3000	O-0.3s-CO-3m-CO	8.9	50	44	0.20	C2	3-10	C2	75-1600	C2	75-1600	6	0.3	7	12.5
5VCP-W500	1200	O-0.3s-CO-3m-CO	8.9	50	44	0.20	C2	3-10	C2	75-630	C2	75-630	6	0.8	7	10
	2000	O-0.3s-CO-3m-CO	8.9	50	44	0.20	C2	3-10	C2	75-1000	C2	75-1000	6	0.5	7	10
	3000	O-0.3s-CO-3m-CO	8.9	50	44	0.20	C2	3-10	C2	75-1600	C2	75-1600	6	0.3	7	10
8VCP-W500	1200	O-0.3s-CO-3m-CO	15.5	60	53	0.29	C2	3-10	C2	75-630	C2	75-630	6	0.8	12	10
	2000	O-0.3s-CO-3m-CO	15.5	60	53	0.29	C2	3-10	C2	75-1000	C2	75-1000	6	0.5	12	10
	3000	O-0.3s-CO-3m-CO	15.5	60	53	0.29	C2	3-10	C2	75-1600	C2	75-1600	6	0.3	12	10
15VCP-W500	1200	O-0.3s-CO-3m-CO	28	75	66	0.42	C2	3-10	C2	75-630	C2	75-630	6	0.8	22	6.3
	2000	O-0.3s-CO-3m-CO	28	75	66	0.42	C2	3-10	C2	75-1000	C2	75-1000	6	0.5	22	6.3
	3000	O-0.3s-CO-3m-CO	28	75	66	0.42	C2	3-10	C2	75-1600	C2	75-1600	6	0.3	22	6.3
15VCP-W750	1200	O-0.3s-CO-3m-CO	28	75	66	0.42	C2	3-10	C2	75-630	C2	75-630	6	0.8	22	10
	2000	O-0.3s-CO-3m-CO	28	75	66	0.42	C2	3-10	C2	75-1000	C2	75-1000	6	0.5	22	10
	3000	O-0.3s-CO-3m-CO	28	75	66	0.42	C2	3-10	C2	75-1600	C2	75-1600	6	0.3	22	10
15VCP-W1000	1200	O-0.3s-CO-3m-CO	28	75	66	0.42	C2	3-10	C2	75-630	C2	75-630	6	0.8	22	12.5
	2000	O-0.3s-CO-3m-CO	28	75	66	0.42	C2	3-10	C2	75-1000	C2	75-1000	6	0.5	22	12.5
	3000	O-0.3s-CO-3m-CO	28	75	66	0.42	C2	3-10	C2	75-1600	C2	75-1600	6	0.3	22	12.5

① Circuit breakers shown in this table were tested in accordance with IEEE standard C37.09-2018.
② All circuit breakers were tested at 60 Hz, and can not be applied at 50 Hz per C37.09-2018.
③ For reclosing service, there is No derating necessary for Eaton's VCP-W family of circuit breakers. R = 100% Type VCP-W breaker can perform the O-C-O per IEEE C37.09; O-0.3s-CO-15s-CO per IEC 56; and some VCP-Ws have performed O-0.3s-CO-15s-CO-15s-CO-15s-CO; all with no derating. Contact Eaton for special reclosing requirements.

Table 8. 15 kV VCP-WXC (k=1) circuit breaker rated on symmetrical current basis (standard ratings), per ANSI Standards①.
See Figure 24 for control schemes and diagram that apply to this breaker. This breaker differs from the standard breaker with the addition of a third motor cut-off switch and addition of two wires.

Identification	Rated voltage																	
Circuit breaker type	Voltage		Insulation level withstand test		Continuous current at 60 Hz	Short circuit current					Interrupting time ②	Max. permissible tripping delay	Transient recovery voltage (RRRV) ③	Capacitor switching ratings				Mechanical endurance
														General purpose	Definite purpose			
															Back to back capacitor switching			
	Max. voltage V	Voltage range factor K	Power frequency (1 min.)	Lightening impulse 1.2x50us		Sym. interrupting at V (Isc)	% DC component (Idc)	Asym.interrupting (It)	Closing & latching capability	Short- time current for 3 sec.				Isolated shunt capacitor bank current	Capacitor bank current	Inrush current	Inrush freqency	No-load operations
	kV rms		kV rms	kV peak	A rms	kA rms total	%	kA rms	kA peak	kA rms	Cycles	Sec.	kV / µs	A rms	A rms	kA peak	kHz	
150 VCP-WXC 63	17.5	1	42	95	1200	63	61	83	175s	63	5	2	1.07		200,1600(9)	7.7	465	10,000
					2000		61	83					1.07		200,1600(9)	7.7	465	10,000
					3000		61	83					1.07		200,1600(9)	7.7	465	5,000

① All circuit breakers are tested to 60 Hz; however, they can also be applied at 50 Hz with no derating.
② Optional interrupting time of 3 cycles is available.
③ For higher RRRV contact Eaton for more information.

Instructions for installation, operation, and maintenance of type VCP-W vacuum circuit breakers

Instruction Booklet IB131029EN
Effective March 2022

Table 9. 5/15 kV VCP-WND (MVA) vacuum circuit breaker types rated on symmetrical current rating basis, per ANSI standards.

Identification	Rated values①														
				Insulation level			Short-circuit ratings (reference C37.04-1999 and C37.06-2009 except as noted①)								
Drawout circuit breaker type	Maximum voltage (V)	Nominal three-phase MVA class	Rated voltage range factor	Power frequency withstand voltage (1 min.)	Lightning impulse withstand voltage (1.2 x 50 µs)	Rated continuous current at 60 Hz	Symmetrical interrupting current (I)	%dc component	Asymmetrical interrupting current (It)	Closing and latching current	Short-time withstand current	Interrupting time	Interrupting time (cycles at 60 Hz)	No-load (mechanical endurance)
Units	kV rms		K②	kV rms	kV peak	A rms③	kA rms sym④	%⑤	kA rms asym total⑥	kA peak⑦	kA rms⑧	ms	Cycles⑨	⑩
50VCP-WND250⑪	4.76	250	1.24	19	60	1,200	29	50	35	97	36	83/50	5/3	10,000

① All circuit breakers are tested at 60 Hz; however, they can also be applied at 50 Hz with no derating.

② For three-phase and line-to-line faults, the symmetrical interrupting capability at an operating voltage

$$I_{sc} = \frac{V}{V_o}$$ (Rated short-circuit current)

But not to exceed KI.
Single line-to-ground fault capacity at an operating voltage.

$$I_{sc} = 1.15\frac{V}{V_o}$$ (Rated short-circuit current)

But not to exceed KI.

The above apply on predominately inductive or resistive three-phase circuits with normal-frequency line-to-line recovery voltage equal to the operating voltage.

③ 4000 A fan-cooled rating is available for 3000 A circuit breakers.

④ Where the voltage range factor K = 1, the short-time withstand current and the maximum symmetrical interrupting current are equal to the rated symmetrical interrupting current.

⑤ Based on the standard dc time constant of 45 ms (corresponding to X/R of 17 for 60 Hz) and the minimum contact parting time as determined from the minimum opening time plus the assumed minimum relay time of 1/2 cycle (8.33 ms for 60 Hz).

⑥ The asymmetrical interrupting current, I total, is given by (It) = I x Sqrt (1 + 2 x %dc x %dc) kA rms asymmetrical total.

⑦ K=1 breakers were tested to 2.6 * I and K>1 breakers were tested to 2.7 * KI.

⑧ Duration of short-time current and maximum permissible tripping delay are both 2 seconds for all circuit breakers listed in this table, as required in C37.04-1999, C37.06-2000 and C37.06-2009.

⑨ All circuit breakers are available as 3 or 5 cycle breakers.

⑩ Each operation consists of one closing plus one opening.

⑪ This breaker is UL listed.

Table 10. 5/15 kV VCP-WND (MVA) vacuum circuit breaker types rated on symmetrical current rating basis, per ANSI standards (continued). ①

Identification	Rated values②																
Drawout circuit breaker type	Continuous current	Operating duty	TRV peak voltage (E2) = (Uc)	TRV time to peak (T2 = t3 x 1.137)	TRV rise time (t3)	RRRV = uc/t3	Cable-charging④	Cable-charging current	Isolated shunt capacitor bank④	Isolated shunt capacitor bank current	Back-to-back capacitor bank④	Back-to-back capacitor bank current	Inrush current	Inrush frequency	Out-of-phase voltage = 1.44 x V	Out-of-phase current = 0.25 x I
Units	A rms	Duty cycle③	kV peak	µsec	µsec	kV/ µsec	Class	A rms	Class	A rms	Class	A rms	kA peak	kHz	kV rms	kA rms
50VCP-WND250	1200	CO—15s—CO	8.9	44	0.2	—	—	—	—	—	—	—	—	—	—	—

① Circuit breakers shown in this table were tested in accordance with IEEE standard C37.09-1979.

② All circuit breakers are tested at 60 Hz; however, they can also be applied at 50 Hz with no derating.

③ For reclosing service, there is No derating necessary for Eaton's VCP-W family of circuit breakers. R = 100%. Type VCP-W breaker can perform the O-C-O per ANSI C37.09; O-0.3s-CO-15s-CO per IEC 56; and some VCP-Ws have performed O-0.3s-CO-15s-CO-15s-CO-15s-CO; all with no derating. Contact Eaton for special reclosing requirements.

④ General Purpose (GP) and Definite Purpose (DP) are defined in C37.09-1999. Based on the definitions of these terms, GP is similar to C0 and DP is similar to C1 as defined in C37.09a-2005.

Instruction Booklet IB131029EN
Effective March 2022

Instructions for installation, operation, and maintenance of type VCP-W vacuum circuit breakers

Table 11. (IEC-56 Standards①) 17.5 kV VCP-W vacuum circuit breaker rated on symmetrical current basis.

Identification	Rated values							
Circuit breaker type	Voltage class	Insulation level		Normal current	Short circuit breaking current	3 second short time current	Short circuit making current	Cable charging breaking amps
		Power frequency	Impulse withstand					
	kV rms	kV rms	kV peak	Amperes	kA rms	kA rms	kV peak	Amperes
36VCPW-ND25	3.6	10	40	630, 1250	25	25	63	25
36VCPW-ND32	3.6	10	40	630, 1250	31.5	31.5	79	25
72VCPW-ND25	7.2	20	60	630, 1250	25	25	63	25
72VCPW-ND32	7.2	20	60	630, 1250	31.5	31.5	79	25
36VCP-W25	3.6	10	40	630, 1250, 2000	25	25	63	25
36VCP-W32	3.6	10	40	1250, 2000	31.5	31.5	79	25
36VCP-W40	3.6	10	40	1250, 2000	40	40	100	25
72VCP-W25	7.2	20	60	630, 1250, 2000	25	25	63	25
72VCP-W32	7.2	20	60	1250, 2000	31.5	31.5	79	25
72VCP-W40	7.2	20	60	1250, 2000	40	40	100	25
120VCP-W25	12.0	28	75	630, 1250, 2000	25	25	63	25
120VCP-W32	12.0	28	75	1250, 2000	31.5	31.5	79	25
120VCP-W40	12.0	28	75	1250, 2000	40	40	100	25
175VCP-W25	17.5	38	95	1250, 2000	25	25	63	31.5
175VCP-W32	17.5	38	95	1250, 2000	31.5	31.5	79	31.5
175VCP-W40	17.5	38	95	1250, 2000	40	40	100	31.5

① Interrupting time is 3 cycles at 50/60 Hz. Rated operating sequence 0-3 min- CO-3 min-CO.

1.4 Outlines and dimensions

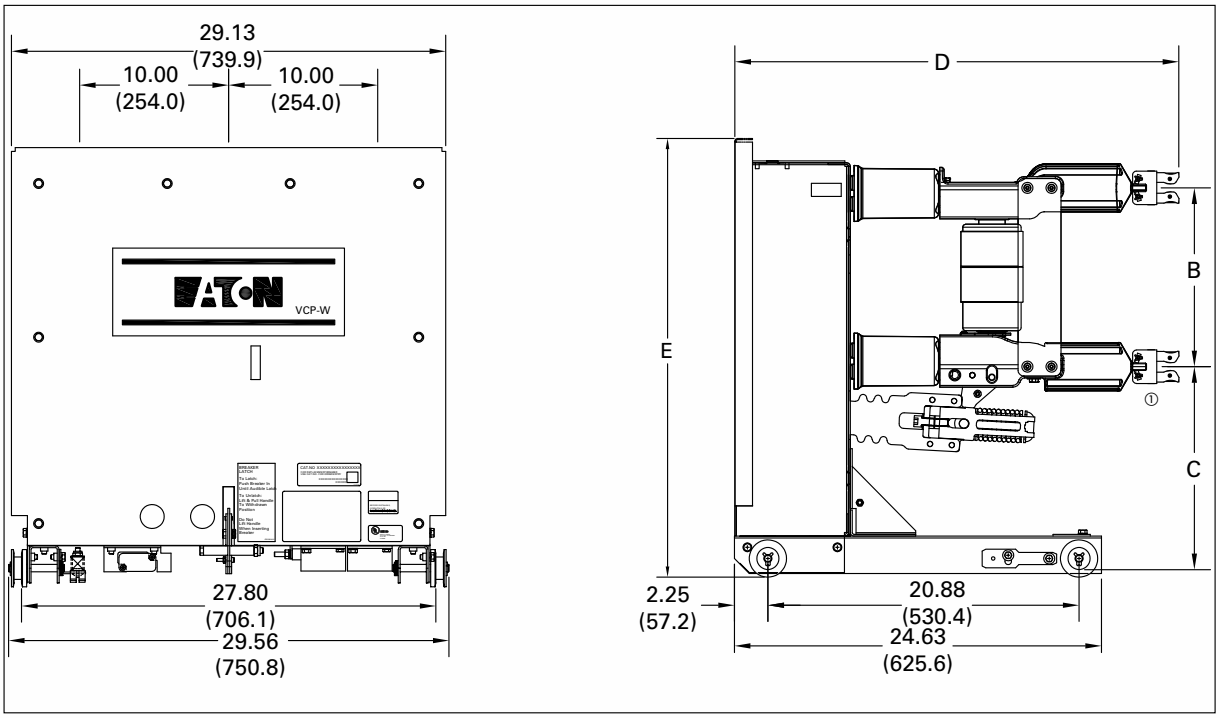

Breaker Identification	A	B	C	D	E
1200/2000 A 5, 8, 15 VCP-W & VCP-WSE <=40 kA	10 (254.00)	12 (304.80)	13.63 (346.20)	29.81 (757.17)	29.44 (747.78)
1200/2000 A 5, 8, 15 VCP-W & VCP-WSE 50 kA	10 (254.00)	12 (304.80)	13.63 (346.20)	29.81 (757.17)	31.44 (798.58)
All 3000 A VCP-W, VCPW-SE.	10 (254.00)	12 (304.80)	13.63 (346.20)	29.94 (760.48)	31.44 (798.58)

① All 63kA & 3000A have round finger clusters.

Figure 1. Type VCP-W (K = 1 & MVA) and VCPW-SE circuit breaker outlines and dimensions in inches (mm), enhanced pole unit shown.

Instructions for installation, operation,
and maintenance of type
VCP-W vacuum circuit breakers

Instruction Booklet IB131029EN
Effective March 2022

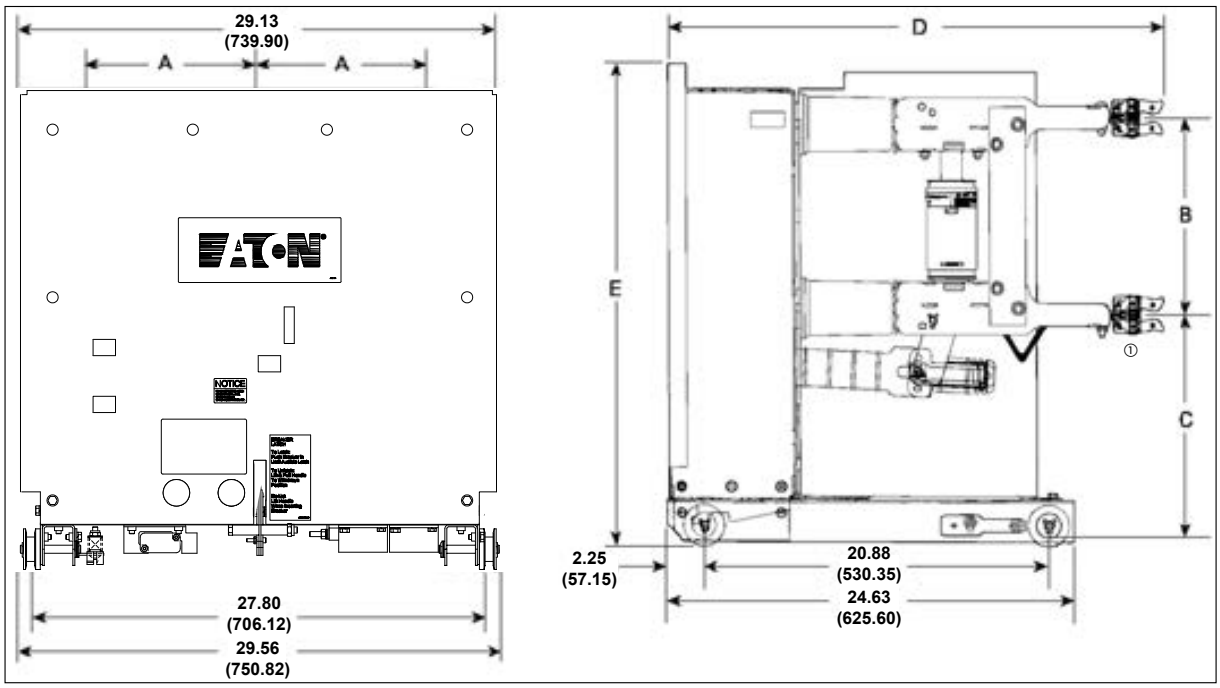

Breaker Identification	A	B	C	D	E
240 VCP-W, 270 VCP-W & 270 VCP-WC	10 (254.00)	14 (355.60)	16.25 (412.75)	34.80 (883.92)	35.22 (894.59)
50 VCP-W350C, 150 VCP-W1000C, 150 VCP-W63, all 3000 A VCP-WC and IEC except those immediately below	10 (254.00)	12 (304.80)	13.63 (346.20)	29.94 (760.48)	31.44 (798.58)
50 VCP-W25C & 150 VCP-W75C, 1200 A	10 (254.00)	12 (304.80)	13.63 (346.20)	29.81 (757.17)	29.44 (747.78)

① All 63kA, 3000A, & 27 kV have round finger clusters.

Figure 2. Type VCP-W, VCP-WC, and IEC circuit breaker outlines and dimensions in inches (mm).

Instruction Booklet IB131029EN
Effective March 2022

Instructions for installation, operation, and maintenance of type VCP-W vacuum circuit breakers

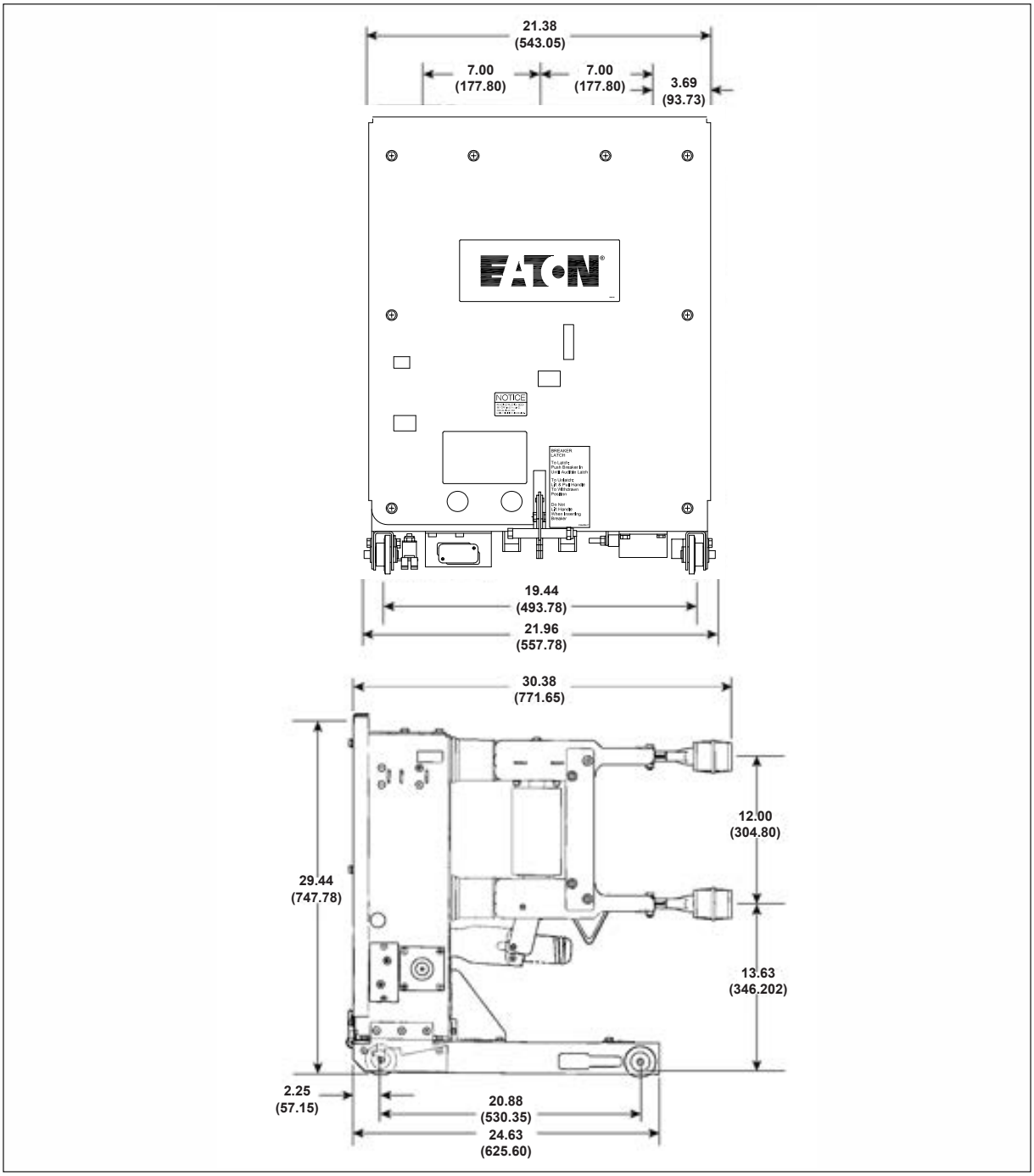

Figure 3. Type VCPW-ND circuit breaker outlines and dimensions in inches (mm).

Instructions for installation, operation, and maintenance of type VCP-W vacuum circuit breakers

Instruction Booklet IB131029EN
Effective March 2022

2. Safe practices

2.1 Recommendations

Type VCP-W vacuum circuit breaker elements are equipped with high speed, high energy operating mechanisms. They are designed with several built-in interlocks and safety features to provide safe and proper operating sequences.

⚠ WARNING

TO PROTECT THE PERSONNEL ASSOCIATED WITH INSTALLATION, OPERATION, AND MAINTENANCE OF THESE CIRCUIT BREAKER ELEMENTS, THE FOLLOWING PRACTICES MUST BE FOLLOWED.

- Only qualified persons as defined in section 6.2.1 and with respect to the local electric code, who are familiar with the installation and maintenance of medium voltage circuits and equipment, should be permitted to work on these circuit breaker elements.
- Read these instructions carefully before attempting any installation, operation or maintenance of these breakers.
- Always remove the breakers from the enclosure before performing any maintenance. Failure to do so could result in electrical shock leading to death, severe personal injury, or property damage.
- BE EXTREMELY CAREFUL while the circuit breaker is on the extension rails. Use provided rail clamps to firmly hold the circuit breaker on the extension rails while performing such activities as charging, closing, and tripping. Carelessness could cause the circuit breaker to fall from the rails resulting in personal injury to those in the area.
- Do not work on a closed breaker or a breaker with closing springs charged. The closing spring should be discharged and the main contacts open before working on the breaker. Failure to do so could result in cutting or crushing injuries.
- Do not use a circuit breaker by itself as the sole means of isolating a high voltage circuit. Remove the breaker to the DISCONNECT position and follow good lockout and tagging rules, as well as all applicable codes, regulations, and work rules.
- Do not leave the breaker in an intermediate position in the cell. Always have the breaker either in the TEST or CONNECTED position. Failure to do so could result in a flash over and possible death, personal injury, or property damage.
- Always remove the maintenance tool from the breaker after charging the closing springs.
- Breakers are equipped with safety interlocks. Do not defeat them. This may result in death, bodily injury, or equipment damage.

3. Receiving, handling, and storage

3.1 General

Type VCP-W vacuum circuit breaker elements are subjected to complete factory production tests and inspection before being packed. They are shipped in packages designed to provide maximum protection to the equipment during shipment and storage and at the same time to provide convenient handling. Tools, such as the maintenance tool, are shipped separately.

3.2 Receiving

If the circuit breaker element is not to be used immediately but is to be placed in storage, maximum protection can be obtained by keeping it packed as shipped.

Upon receipt of the equipment, inspect the containers for any signs of damage or rough handling. Open the containers carefully to avoid any damage to the contents. Use a nail puller rather than a crow bar when required. When opening the containers, be careful to save any loose items or hardware that may be otherwise discarded with the packing material. Check the contents of each package against the packing list.

Examine the circuit breaker element for any signs of shipping damage such as broken, missing, or loose hardware, damaged or deformed insulation, and other components. File claims immediately with the carrier if damage or loss is detected and notify the nearest Eaton office.

3.3 Handling

⚠ CAUTION

DO NOT USE ANY LIFTING DEVICE AS A PLATFORM FOR PERFORMING MAINTENANCE, REPAIR, OR ADJUSTMENT OF THE BREAKER OR FOR OPENING, CLOSING THE CONTACTS OR CHARGING THE SPRINGS. THE CIRCUIT BREAKER ELEMENT MAY SLIP OR FALL CAUSING SEVERE PERSONAL INJURY. ALWAYS PERFORM MAINTENANCE, REPAIR, AND ADJUSTMENTS ON A SOLID WORK SURFACE CAPABLE OF SUPPORTING THE BREAKER ELEMENT.

When a breaker element is ready for installation, a lifting yoke in conjunction with an overhead lifter or portable floor lifter can be used to move a breaker element. When a breaker element is to be lifted, position the lifting yoke over the breaker element and insert lifters into the breaker element side openings with the lifting hole toward the interrupters. Once the lifting yoke is securely seated in the holes, the breaker element can be carefully lifted and moved. Also, a breaker lift pan in conjunction with the portable floor lifter can be used to create a breaker lifter. The breaker can be placed or rolled onto the lift pan with the conductors arms pointing away from the lifter (see IB022015EN for more details).

3.4 Storage

If the circuit breaker element is to be placed in storage, maximum protection can be obtained by keeping it packed as shipped. Before placing it in storage, checks should be made to make sure that the breaker element is free from shipping damage and is in satisfactory operating condition.

The circuit breaker element is shipped with its contacts open and closing springs discharged. The indicators on the front panel should confirm this. Insert the maintenance tool in the manual charge socket opening (Figure 6). Charge the closing springs by pumping the handle up and down approximately 28 to 38 times until a crisp metallic “click” is heard. This indicates that the closing springs are charged and is shown by the closing spring “charged” (yellow) indicator. Remove the maintenance tool. Operate the push-to-close button. The breaker element will close as shown by the breaker contacts “closed” (red) indicator. Operate the push-to-open button. The breaker element will trip as shown by the breaker contacts “open” (green) indicator. After completing this initial check, leave the closing springs “discharged” and breaker contacts “open”.

Instruction Booklet IB131029EN
Effective March 2022

Outdoor storage of the breaker element is NOT recommended. If unavoidable, the outdoor location must be well drained and a temporary shelter from sun, rain, snow, corrosive fumes, dirt, falling objects, and excessive moisture must be provided. Containers should be arranged to permit free circulation of air on all sides and temporary heaters should be used to minimize condensation. Moisture can cause rusting of metal parts and deterioration of high voltage insulation. A heat level of approximately 400 watts for each 100 cubic feet (2.83 cubic meters) of volume is recommended with the heaters distributed uniformly throughout the structure near the floor.

Indoor storage should be in a building with sufficient heat and air circulation to prevent condensation. If the building is not heated, the same general rule for heat as for outdoor storage should be applied.

3.5 Switchgear foundation criteria

The equipment must be placed on a true and level surface to allow for proper functioning of the doors and drawout components. The finished foundation surface is defined as flat and level within 0.06 in. (1.6 mm) in 36 in. (914 mm) in any direction, left to right, front to back, and diagonally. Alternatively, a local flatness "FF" value of 50 or higher and an accompanying "FL" value of 37 to 40 as defined in industry standard American Society for Testing and Materials (ASTM) E1155-96 and industry standard American Concrete Institute (ACI) 117-90 may be used to establish the flatness and levelness of the finished foundation.

Design the foundation so it will be strong enough to support the weight of the switchgear without sagging. Be sure to take into account the shock or impact weight that occurs when the breaker trips and when it closes. The impact weight is 1.5 times the weight of the breaker.

Careful preparation of the foundation is important for simplicity of erection, ease of operation, and good performance. The recommended foundation consists of steel channels embedded in a level concrete floor for indoor switchgear. The channels shall be level within 0.06 in. over 36 in.(0.318 mm in 914.4 mm) left to right, front to rear, and diagonally, as measured by a laser level. In no case may the non-supporting areas of the concrete floor be higher than the tops of the steel channels. For outdoor switchgear, the same levelness and flatness criteria should apply to the supporting foundation for the outdoor house.

The anchor bolts, channels, and other materials are to be furnished by the purchaser of the switchgear. A 4 in.(106.6 mm) structural channel is recommended as the minimum size for the average indoor switchgear system.

3.6 Shipping breakers in switchgear

Eaton has received inquiries from both OEMs and end-use customers regarding whether it is acceptable to ship 5 kV to 27 kV breakers installed in switchgear cells. The answer depends on the construction of the switchgear and the weight of the breakers being shipped in the switchgear.

The OEM and the end-use customer will need to determine if the structure is rigid enough to handle shipping breakers of varying weights in their switchgear without causing any permanent damage to the switchgear structure, breaker cell parts, breakers and accessories. This is true for both one high and two high switchgear configurations. **Eaton does not recommend shipping stand-alone NEMA 1 switchgear with the breakers installed.**

The OEM and the end-use customer should consider the following when they are making the decision on whether or not to ship the breakers in the switchgear cells:

1. A welded structure is more rigid than a bolted structure;
2. Switchgear installed in an outdoor house consisting of a rigid structural base and walls that prevent bowing during shipping and installation will have less chance of being damaged. Also, the wall construction should prevent the switchgear from going out of square during shipping;
3. The quality of the roads that will be used to ship the outdoor house to the site; and
4. Will the switchgear require any type of ocean travel? Depending on the time of year, ocean travel can be much more demanding on a structure than road travel.

After the determination has been made to ship the breakers in the switchgear cells, then the following criteria should be followed.

- The breaker should be shipped in the "Connected" position with the breaker "Open".
- The accessories like the truck operated cell (TOC) switch and the mechanism operated cell (MOC) switch must have temporary restrictions (tie downs) designed and installed to prevent interaction with the breaker while being shipped and installed. Only after the switchgear has been placed in its permanent location should these tie downs be removed.

Once the switchgear has been installed on the site, it is the responsibility of the OEM or end-use customers to ensure that no damage has occurred to the following items in the breaker switchgear cell and the breaker:

- Ground contacts;
- Secondary disconnect;
- Close floor tripper;
- Levering latch;
- Trip floor tripper;
- Breaker cell rails;
- Code plates;
- MOC operator; and
- TOC operator.

Depending on the construction site location, the road conditions may require additional shipping bracing be added to protect the breakers, even more than normal. It is up to the OEM or end-use customers to determine the conditions of the roads that the trucking company will utilize and if any additional shipping bracing is required.

If the OEM or end-use customers decides that their structure is rigid enough to safely support the weight of the breakers during shipping, then they need to take pictures of all the cells with the breakers fully racked in to the "Connect" position and the breaker "Open". Also, they need to take pictures of all the shipping bracing that was installed per cell prior to shipping and then after the switchgear is installed prior to removal of the shipping tie downs. If for some reason the breakers or the switchgear cell parts are damaged, then Eaton will request to see these pictures first prior to going to the site to investigate any damage to the breakers, cell components or accessories. **All repair cost associated with resolving these issues due to shipping damage will be the responsibility of the OEM or end-use customers to collect against their shipper.**

3.7 Tools and accessories

Tools and accessories, both standard and optional, are available for use with the circuit breaker element (Figure 4). If not specified accessories can be used for 36 in. wide and 26 in. wide breakers.

Spin-free levering-in crank: Used to crank breaker between DISCONNECT, TEST, and CONNECTED positions (Required).

Extension rails: Permits breaker to be withdrawn from its compartment (Required).

Rail clamps: Used to secure breaker to extension rails.

Lifting yoke: Used to lift breaker (Required).

Manual charging handle: Used to charge closing springs manually (Required).

Portable lifter: Used to lift breaker to or from extended rails.

Breaker lift pan: This accessory enables the breaker to be lifted from the ground to any height cell without the extension rails. It consists of a portable lifter and a MV breaker lift pan.

- Portable lifter;
- MV breaker lift pan with short extension rail kit for 36"or 26" wide breaker.

Drawout ramp: Used to insert or withdraw breaker from lower compartment without portable lifter.

Docking transport dolly: Used to insert or withdraw breaker from lower compartment without portable lifter or move breaker from one location to another.

Electrical levering-in device:

BPI pan assembly:

Integral Motorized Racking (MR2) used to electrically move breaker between DISCONNECT/TEST, or DISCONNECT, TEST, and CONNECTED positions is available. Specified by description as opposed to a style number.

If the external electric levering-in device which mounts to the door or pan assembly is used, then the breaker can be moved between the DISCONNECT and CONNECTED positions.

The process of levering the breaker from the DISCONNECT to the TEST position would need to be performed manually (approximately 6 turns).

Non-BPI pan assembly:

Used to electrically move the breaker between DISCONNECT/TEST and CONNECTED positions.

Truck operated cell (TOC) switch: Indicates when breaker is in the CONNECT position. Furnished with standard push on wire terminals. Optional ring tongue terminals are available.

Mechanism operated cell (MOC) switch: Provides additional normally open and closed contacts for when control and protection scheme exceeds the available auxiliary contacts in the breaker. Furnished with standard push on wire terminals. Optional ring tongue terminals are available.

This feature is available in two different configurations:

1.) Functions in both the TEST and CONNECT positions, or

2.) Functions only in the CONNECT position.

Eaton strongly recommends use of the TEST and CONNECT position configuration.

Test jumper: Used to operate breaker electrically while breaker is on extension rails or transport dolly.

Test cabinet: Used to provide power to operate breaker outside its compartment for the purpose of testing functionality.

Key provisions with positional interlock: This enables locking of the levering-in cage when the breaker is in the TEST position with a padlock or keyed cylinder lock.

Wheel conversion kit (MG & TD only): Due to how the manual ground and test device is designed this is the best direct roll-in wheel kit to use.

Wheel conversion kit for direct roll-in: This wheel kit can be used to convert a standard breaker or electrical ground and test device to a direct roll-in version.

Conversion kit ROF to non-ROF: This kit is used to convert a direct roll-in cell to a non direct roll-in cell. It provides the teeter totter feature that prevents removing a breaker from the breaker cell when the extension rails or MV breaker lift pan are not in place. Also, the short ramp feature in the front of each rail would need to be removed.

Conversion kit non-ROF to ROF: This kit is used to convert a non-direct roll-in cell to a direct roll-in cell. It provides the ramp feature that goes on the end of each rail to help guide the steel wheels on the side of the breaker up onto the rail rolling surface. This is only to be used in the lower switchgear cells that are level with the floor. The teeter totter feature that keeps the breaker from being rolled out of the cell would need to be removed.

Secondary conversion kit: This kit converts an automatic secondary in a BPI pan assembly to a manual enabled automatic secondary. When the release lever is raised above the stop feature the secondaries will slide forward to automatically connect, see section 8.2 for more details.

Closed door racking guide: This feature can be added to the front of the BPI pan assembly to provide a guide for the manual levering-in tool when the switchgear door is closed to guide the levering-in crank socket onto the levering-in drive screw nut.

Instruction Booklet IB131029EN
Effective March 2022

Instructions for installation, operation, and maintenance of type VCP-W vacuum circuit breakers

Table 12. Accessories for 36-inch wide breaker compartments for 29-inch frame breaker.

5A/5B TOC switch

5A/5B MOC switch

Standard set of accessories

Portable lifter

Portable lifter and lift pan

Optional accessories include (clockwise): lifting yoke, test cabinet, spin-free levering crank, and test jumper

Description	Style number
TOC (truck-operated cell) switch 4A/5B contacts	1C20006G12
TOC (truck-operated cell) switch 4A/5B contacts ring-tongue terminals	1C20006G15
MOC (mechanism-operated cell) switch	
5A/4B contacts (test and connect)	1C20007G12
5A/4B contacts (connect only)	1C20007G13
10A/8B contacts (test and connect)	1C20007G14
10A/8B contacts (connect only)	1C20007G15
15A/12B contacts (test and connect)	1C20007G16
15A/12B contacts (connect only)	1C20007G17
5A/4B contacts (test and connect) ring-tongue terminals	1C20007G28
5A/4B contacts (connect only) ring-tongue terminals	1C20007G29
10A/8B contacts (test and connect) ring-tongue terminals	1C20007G30
10A/8B contacts (connect only) ring-tongue terminals	1C20007G31
15A/12B contacts (test and connect) ring-tongue terminals	1C20007G32
15A/12B contacts (connect only) ring-tongue terminals	1C20007G33
Spin-free levering-in crank with clutch	701B601G11
Extension rails (right and left, one set)	7813C41G03
Set of rail clamps	6511C83G11
Lifting yoke	691C607G11
Manual charging handle	8064A02G11
Standard set of accessories Spin-free levering-in crank with clutch Extension rails (right and left, one set) Manual charging handle Set of rail clamps	1A30136G02
Portable lifter (26-/36-inch convertible)	1C19086H01
MV breaker lift pan	1C20220G01
Drawout ramp	1C14163G08
Docking transport dolly	6510C71G21
Electrical external levering-in device	1A30257G01
Test jumper	6526C23G11
Test cabinet Any DC close and any trip AC or DC close and DC trip 120 Vac close and capacitor trip 240 Vac close and capacitor trip AC or DC charge, DC close and trip	 8346A28G21 8346A28G22 8346A28G23 8346A28G60 8346A28G24
Key provisions with positional Interlock This allows for key locking the levering-in cage when the breaker is in the TEST position.	6510C48G22
Wheel conversion kit (MG & TD only)	68C5010G41
Wheel conversion kit for direct roll-in	68C5010G42
Conversion kit ROF to NON-ROF	1C19779G101
Conversion kit NON- ROF to ROF	1C19779G102
Secondary conversion kit: to convert automatic secondary to manual operation	1C20335G01
Closed door racking guide	1C20339G02
Grease in 14oz. container (Prod. code - U0497)	53702AML00
Contact wax (Prod. code - U0497)	83342CE

Instructions for installation, operation, and maintenance of type VCP-W vacuum circuit breakers

Instruction Booklet IB131029EN
Effective March 2022

Table 13. Narrow design accessories for 26-inch-wide breaker compartments.

	Description	Style number
Set of ND accessories	TOC (truck-operated cell) switch 4A/3B contacts	7797C20G01
	MOC (mechanism-operated cell) switch	
	4A/3B contacts (test and connect)	7797C24G02
	4A/3B contacts (connect only)	7797C24G03
	8A/6B contacts (test and connect)	7797C24G04
	8A/6B contacts (connect only)	7797C24G05
	12A/9B contacts (test and connect)	7797C24G06
	Spin-free levering-in crank with clutch	701B601G11
	Primary contact spanner wrench	502A850G01
	Extension rails (right and left, one set)	7813C41G03
	Set of rail clamps	6511C83G12
	Lifting yoke	691C607G02
ND 4A/3B TOC switch ND 4A/3B MOC switch	Manual charging handle	8064A02G11
	Set of ND accessories Spin-free levering-in crank with clutch Primary contact spanner wrench Extension rails (right and left, one set) Manual charging handle Set of rail clamps	1A30136G04
	Portable lifter (26-/36-inch convertible)	1C19086H01
	MV breaker lift pan and short extension rail kit	1C19086G01
	Drawout ramp	1C14163G01
	Docking transport dolly	6510C71G02
Electric levering-in device Padlock/key interlock	Electrical external levering-in device	1A30257G01
	Test jumper	1C15331G01
	Test cabinets	
	Any DC close and any trip	8346A28G41
	AC or DC close and DC trip	8346A28G42
	120 Vac close and capacitor trip	8346A28G43
	240 Vac close and capacitor trip	8346A28G60
	Padlock/key provisions with positional interlock Includes the padlock assembly plus a positional interlock. This allows for key locking the levering-in cage when the breaker is locked in the DISCONNECT position	6510C48G01
	Grease in 14oz. container (Prod. code - U0497)	53702AML00
	Contact wax (Prod. code - U0497)	83342CE

Instruction Booklet IB131029EN
Effective March 2022

Instructions for installation, operation, and maintenance of type VCP-W vacuum circuit breakers

Table 14. 27 kV VCP-W accessories.

Description		Style number
TOC (truck operated cell) switch	5A/5B contacts	6510C49G12
TOC (direct roll-in)		691C568G06
MOC (mechanism operated cell) switch	5A/4B contacts (test and connect)	6529C58G02
	5A/4B contacts (connect only)	6529C58G03
	10A/8B contacts (test and connect)	6529C58G04
	10A/8B contacts (connect only)	6529C58G05
	15A/12B contacts (test and connect)	6529C58G06
	15A/12B contacts (connect only)	6529C58G07
Spin-free levering-in crank		701B601G11
Standard levering-in crank		701B601G12
Extension rails (right and left—one set)		7813C41G03
Set of rail clamps		6511C83G11
Lifting yoke		691C607G11
Manual charging handle		8064A02G11
Standard set of 27 kV accessories	Levering-in crank with clutch manual charging handle	1A30136G02
	Wheel kit (for direct roll-in)	68C5010G42
Portable lifter		1C19086H01
MV breaker lift pan		1C20220G01
Drawout ramp		1C14163G02
Docking transport dolly		6510C71G11
Electrical external levering-in device		1A30257G01
Test cabinet	Any DC close and any trip	8346A28G21
	AC or DC close and DC trip	8346A28G22
	120 Vac close and capacitor trip	8346A28G23
	240 Vac close and capacitor trip	8346A28G60
Test jumper		6526C23G11
120 Vac capacitor trip device		3A39175G01
240 Vac capacitor trip device		3A39175G02
27 kV epoxy cable support		7799C52H01
8.25 inch epoxy stand-off insulator		1A34286H01
Grease in 14oz. container (Prod. code - U0497)		53702AML00
Contact wax (Prod. code - U0497)		83342CE

Epoxy stand-off insulator

Epoxy cable support

Capacitor trip device

5A/5B TOC switch

5A/5B MOC switch

Electrical levering-in device

Standard accessories include (clockwise): Left and right removable extension rails, manual charging handle, and levering crank

Optional accessories include (clockwise): lifting yoke, test cabinet, spin-free levering crank, and test jumper

Portable lifter

Portable lifter and lift pan

Instructions for installation, operation, and maintenance of type VCP-W vacuum circuit breakers

Instruction Booklet IB131029EN
Effective March 2022

Ground and test device (G&TD) accessories: Eaton offers a broad spectrum of manual and electrical G&TDs. All of the manual G&TDs provide access to all the line and load terminals to enable phase checking. Also, they provide the ability to verify operation of the voltage sensing equipment against a live source while verifying that the other connection does not have any voltage present prior to applying the grounds. The simple electrical G&TDs only provide access to line or load terminals. One of the designs provides the ability to perform cable testing as well as grounding the desired circuit.

Table 15. 15 kV simple manual ground and test devices—bus bar type.

Simple manual ground and test device

Description	25 and 40 kA Style number	50 kA Style number	63 kA Style number
Upper and lower terminals 1200 A (26" narrow design)	4A35130G01	—	—
Upper and lower terminals 1200/2000 A	66A5092G42	66A5092G02	66A5092G12
Upper and lower terminals 3000 A	66A5092G43	66A5092G03	66A5092G13
Upper terminals only 1200/2000 A	66A5092G44	66A5092G04	66A5092G14
Lower terminals only 1200/2000 A	66A5092G45	66A5092G05	66A5092G15
Upper terminals only 3000 A	66A5092G46	66A5092G06	66A5092G16
Lower terminals only 3000 A	66A5092G47	66A5092G07	66A5092G17
Upper and lower terminals 1200/2000 A with ROF wheels installed	66A5092G82	66A5092G62	66A5092G72
Upper and lower terminals 3000 A with ROF wheels installed	66A5092G83	66A5092G63	66A5092G73
Upper terminals only 1200/2000 A with ROF wheels installed	66A5092G84	66A5092G64	66A5092G74
Lower terminals only 1200/2000 A with ROF wheels installed	66A5092G85	66A5092G65	66A5092G75
Upper terminals only 3000 A with ROF wheels installed	66A5092G86	66A5092G66	66A5092G76
Lower terminals only 3000 A with ROF wheels installed	66A5092G87	66A5092G67	66A5092G77

Table 16. 15 kV VCP-W simple manual ground and test device—"bail" and "ball" type ① .

Bail type manual ground and test device

Bail connector

Ball connector

Description	Style number
Bail 1200/2000 A upper/lower	66A5201G01
Bail 3000 A upper/lower	66A5201G02
Ball 1200/2000 A upper/lower	66A5291G01
Ball 3000 A upper/lower	66A5291G02
Bail 1200/2000 A upper/lower with ROF wheels installed	66A5201G11
Bail 3000 A upper/lower with ROF wheels installed	66A5201G12
Ball 1200/2000 A upper/lower with ROF wheels installed	66A5291G11
Ball 3000 A upper/lower with ROF wheels installed	66A5291G12

① Cables are not provided

Table 17. 15 kV complex manual (selectable) ground and test device.

Ground and test device

Description	Style number
1200/2000/3000 A, 50 kA with ROF	94G7092G712
1200/2000/3000 A, 50 kA (standard, non-ROF)	94G7091G711

Table 18. 15 kV simple electrically operated ground and test device.

Simple electrically operated ground and test device

Description	25 and 40 kA Style number	50 kA Style number	63 kA Style number
Without roll-on-floor wheels (ROF) factory installed			
Upper terminal			
1200/2000 A, 48 Vdc	66A5302G75	—	—
1200/2000 A, 125 Vdc or 120 Vac	66A5302G76	—	—
1200/2000 A, 250 Vdc or 240 Vac	66A5302G77	—	—
1200/2000 A, 48 Vdc	—	66A5302G02	—
1200/2000 A, 125 Vdc or 120 Vac	—	66A5302G03	—
1200/2000 A, 250 Vdc or 240 Vac	—	66A5302G04	—
3000 A, 48 Vdc	—	66A5302G05	—
3000 A, 125 Vdc or 120 Vac	—	66A5302G06	—
3000 A, 250 Vdc or 240 Vac	—	66A5302G07	—
1200/2000/3000 A, 48 Vdc	—	—	66A5302G12
1200/2000/3000 A, 125 Vdc or 120 Vac	—	—	66A5302G13
1200/2000/3000 A, 250 Vdc or 240 Vac	—	—	66A5302G14
Lower terminal			
1200/2000 A, 48 Vdc	66A5302G85	—	—
1200/2000 A, 125 Vdc or 120 Vac	66A5302G86	—	—
1200/2000 A, 250 Vdc or 240 Vac	66A5302G87	—	—
1200/2000 A, 48 Vdc	—	66A5302G22	—
1200/2000 A, 125 Vdc or 120 Vac	—	66A5302G23	—
1200/2000 A, 250 Vdc or 240 Vac	—	66A5302G24	—
3000 A, 48 Vdc	—	66A5302G25	—
3000 A, 125 Vdc or 120 Vac	—	66A5302G26	—
3000 A, 250 Vdc or 240 Vac	—	66A5302G27	—
1200/2000/3000 A, 48 Vdc	—	—	66A5302G32
1200/2000/3000 A, 125 Vdc or 120 Vac	—	—	66A5302G33
1200/2000/3000 A, 250 Vdc or 240 Vac	—	—	66A5302G34
With roll-on-floor wheels (ROF) factory installed			
Upper terminal			
1200/2000 A, 48 Vdc with ROF	66A5302G53	—	—
1200/2000 A, 125 Vdc or 120 Vac with ROF	66A5302G54	—	—
1200/2000 A, 250 Vdc or 240 Vac with ROF	66A5302G55	—	—
1200/2000 A, 48 Vdc with ROF	—	66A5302G35	—
1200/2000 A, 125 Vdc or 120 Vac with ROF	—	66A5302G36	—
1200/2000 A, 250 Vdc or 240 Vac with ROF	—	66A5302G37	—
3000 A, 48 Vdc with ROF	—	66A5302G38	—
3000 A, 125 Vdc or 120 Vac with ROF	—	66A5302G39	—
3000 A, 250 Vdc or 240 Vac with ROF	—	66A5302G40	—
1200/2000/3000 A, 48 Vdc with ROF	—	—	66A5302G41
1200/2000/3000 A, 125 Vdc or 120 Vac with ROF	—	—	66A5302G42
1200/2000/3000 A, 250 Vdc or 240 Vac with ROF	—	—	66A5302G43
Lower terminal			
1200/2000 A, 48 Vdc with ROF	66A5302G57	—	—
1200/2000 A, 125 Vdc or 120 Vac with ROF	66A5302G58	—	—
1200/2000 A, 250 Vdc or 240 Vac with ROF	66A5302G59	—	—
1200/2000 A, 48 Vdc with ROF	—	66A5302G44	—
1200/2000 A, 125 Vdc or 120 Vac with ROF	—	66A5302G45	—
1200/2000 A, 250 Vdc or 240 Vac with ROF	—	66A5302G46	—
3000 A, 48 Vdc with ROF	—	66A5302G47	—
3000 A, 125 Vdc or 120 Vac with ROF	—	66A5302G48	—
3000 A, 250 Vdc or 240 Vac with ROF	—	66A5302G49	—
1200/2000/3000 A, 48 Vdc with ROF	—	—	66A5302G50
1200/2000/3000 A, 125 Vdc or 120 Vac with ROF	—	—	66A5302G51
1200/2000/3000 A, 250 Vdc or 240 Vac with ROF	—	—	66A5302G52

Instructions for installation, operation, and maintenance of type VCP-W vacuum circuit breakers

Instruction Booklet IB131029EN
Effective March 2022

Table 19. 15 kV simple electrically operated ground and test device for VCP-W without key interlocks.

	Description	Style number
Electrically operated ground and test device	**Lower terminal**	
	1200/2000 A, 125 Vdc or 120 Vac, 40 kA with ROF	66A5312G45

Note: These units are also available as direct-roll-on-the-floor products via a separately purchased wheel kit.

Table 20. 15 kV simple electrically operated ground and test device for VCP-WXC.

	Description	Style number
Electrically operated ground and test device	**Upper terminal**	
	1200/2000/3000 A, 125 Vdc or 120 Vac, 63 kA	66A5302G83
	Lower terminal	
	1200/2000/3000 A, 125 Vdc or 120 Vac, 63 kA	66A5302G93

Note: These units are also available as direct-roll-on-the-floor products via a separately purchased wheel kit.

Table 21. 15 kV VCP-W CEG&TD 1200/2000/3000 A - product code: 6078R.

	Description	25 and 40 kA Style number	50 kA Style number
VCP-W CEG&TD 1200/2000/3000 A	**Without roll-on-floor wheels (ROF) factory installed**		
	1200/2000 A, 48 Vdc	83C4950G21	83C4950G01
	1200/2000 A, 125/120	83C4950G22	83C4950G02
	1200/2000 A, 250/240	83C4950G23	83C4950G03
	3000 A, 48 Vdc	–	83C4950G11
	3000 A, 125/120	–	83C4950G12
	3000 A, 250/240	–	83C4950G13
	With roll-on-floor wheels (ROF) factory installed		
	1200/2000 A, 48 Vdc	83C4950G71	83C4950G51
	1200/2000 A, 125/120	83C4950G72	83C4950G52
	1200/2000 A, 250/240	83C4950G73	83C4950G53
	3000 A, 48 Vdc	–	83C4950G61
	3000 A, 125/120	–	83C4950G62
	3000 A, 250/240	–	83C4950G63

Instruction Booklet IB131029EN
Effective March 2022

Table 22. 15 kV VCP-W CEG&TD accessories.

	Description	Style number
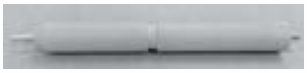 692C899H03	Replacement voltage probe – 1 probe (692C899H01)	81A4936G01
	Replacement voltage probe – 3 probes (692C899H01)	81A4936G02
	Replacement CEGTD SP probe - 1 probe (692C899H03)	81A4936G05
	Replacement CEGTD SP probe - 3 probes (692C899H03)	81A4936G06
	SP. No insert probe - 1 probe (692C899H11)	81A4936G11
	SP. No insert probe - 3 probes (692C899H11)	81A4936G12
	15kV, 50kA 1200/2000A finger cluster conversion kit	83C4864G03
	15kV, 25/40kA 1200/2000A finger cluster conversion kit	83C4864G04
	BPI cell position indication label for CEG&TD ①	1C19649H13

692C899H01

692C899H11

① One of these is required for every switchgear cell that will accommodate a CEG&TD.

Table 23. 27 kV manual ground and test device.

	Description	Style number
27 kV simple manual ground and test device—bus bar type	1200/2000 A, bus bar type—top and bottom studs	1C94354G01
	1200/2000 A, bus bar type—top and bottom studs with factory installed wheel kit	1C94354G11
	1200/2000 A, ball type—top and bottom studs	66A5296G01
	1200/2000 A, ball type—top and bottom studs with factory installed wheel kit	66A5296G11

Ball type

Ball connector

Instructions for installation, operation, and maintenance of type VCP-W vacuum circuit breakers

Instruction Booklet IB131029EN
Effective March 2022

Table 24. Dummy elements①.

Description	Style number
5 kV, 1200 A (up to 50 kA)	691C605G03
5 kV, 2000 A (up to 50 kA)	691C605G04
5 kV, 3000 A (up to 63 kA)	691C605G05
15 kV, 1200 A (up to 50 kA)	691C605G06
15 kV, 2000 A (up to 50 kA)	691C605G07
15 kV, 3000 A (up to 63 kA) ②	691C605G08
27 kV, 1200 A	694C651G01
27 kV, 2000 A	694C651G02

① Dummy elements applicable for breakers rated VCP-W MVA, VCP-W K = 1, and VCP-WSE.

② Dummy element also applicable for VCP-WXC breaker.

3.8 Type VCP-W vacuum circuit breaker element weights (Tables 25, 26, and 27).

Table 25. K=1 rated VCP-W breaker weights①.

Rating	Amperes	Lbs. (kg)
15VCP-W 25 15VCP-WSE 25	1200	343 (156)
	2000	353 (160)
	3000	426 (193)
15VCP-W 40 15VCP-WSE 40	1200	353 (160)
	2000	353 (160)
	3000	426 (193)
15VCP-W 50 15VCP-WSE 50	1200	374 (170)
	2000	374 (170)
	3000	426 (193)
150VCP-W 63	1200	460 (209)
	2000	490 (222)
	3000	525 (238)
8VCP-W 40 8VCP-WSE 40	1200	353 (160)
	2000	353 (160)
	3000	426 (193)
8VCP-W 50 8VCP-WSE 50	1200	374 (170)
	2000	374 (170)
	3000	426 (193)
5VCP-W 25 5VCP-WSE 25	1200	343 (156)
	2000	353 (160)
	3000	426 (193)
5VCP-W 40 5VCP-WSE 40	1200	353 (160)
	2000	353 (160)
	3000	426 (193)
5VCP-W 50 5VCP-W 50SE	1200	374 (170)
	2000	374 (170)
	3000	426 (193)
50VCP-W 63	1200	460 (209)
	2000	490 (222)
	3000	525 (238)
270VCP-W16	600	460 (209)
	1200	480 (218)
	2000	500 (227)
270VCP-W22	600	460 (209)
	1200	480 (218)
	2000	500 (227)
270VCP-W25	600	460 (209)
	1200	480 (218)
	2000	500 (227)
270VCP-W32	1200	545 (245)
	2000	560 (252)
270VCP-W40	1200	545 (245)
		560 (252)

① Does not include shipping carton.

Instruction Booklet IB131029EN
Effective March 2022

Instructions for installation, operation, and maintenance of type VCP-W vacuum circuit breakers

Table 26. MVA Rated VCP-W breaker weights①.

Rating	Amperes	Lbs. (kg)
50VCPW-ND250	1200	345 (157)
5VCP-W250 5VCPW-SE250	1200	353 (160)
	2000	353 (160)
	3000	426 (193)
5VCP-W350 5VCPW-SE350	1200	374 (170)
	2000	374 (170)
	3000	426 (193)
8VCP-W500 8VCPW-SE500	1200	353 (160)
	2000	353 (160)
	3000	426 (193)
15VCP-W500 15VCPW-SE500	1200	343 (156)
	2000	353 (160)
	3000	426 (193)
15VCP-W750 15VCPW-SE750	1200	353 (160)
	2000	353 (160)
	3000	426 (193)
15VCP-W1000 15VCPW-SE1000	1200	374 (170)
	2000	374 (170)
	3000	426 (193)
270VCP-W750	600	460 (209)
	1200	480 (218)
	2000	500 (227)
270 VCP-W1000	600	460 (209)
	1200	480 (218)
	2000	500 (227)
270 VCP-W1250	600	460 (209)
	1200	480 (218)
	2000	500 (227)
270 VCP-W1600	1200	545 (245)
	2000	560 (252)
270VCP-W2000	1200	545 (245)
	2000	560 (252)

① Does not include shipping carton.

Table 27. VCP-W IEC rated breaker weights①.

Rating	Nominal current amperes	Lbs. (kg)
36VCPW-ND25	630	350 (159)
	1250	350 (159)
36VCPW-ND32	630	350 (159)
	1250	350 (159)
72VCPW-ND25	630	350 (159)
	1250	350 (159)
72VCPW-ND32	630	350 (159)
	1250	350 (159)
36VCP-W25	630	350 (159)
	1250	350 (159)
	2000	410 (186)
36VCP-W32	1250	350 (159)
	2000	410 (186)
36VCP-W40	1250	375 (170)
	2000	410 (186)
72VCP-W25	630	350 (159)
	1250	350 (159)
	2000	410 (186)
72VCP-W32	1250	350 (159)
	2000	410 (186)
72VCP-W40	1250	375 (170)
	2000	410 (186)
120VCP-W25	630	350 (159)
	1250	350 (159)
	2000	410 (186)
120VCP-W32	1250	350 (159)
	2000	410 (186)
120VCP-W40	1250	375 (170)
	2000	410 (186)
175VCP-W25	630	350 (159)
	1250	350 (159)
	2000	410 (186)
175VCP-W32	1250	375 (170)
	2000	410 (186)
175VCP-W40	1250	375 (170)
	2000	410 (186)
240 VCP-W16	630	462 (210)
	1250	484 (220)
	2000	506 (230)
240 VCP-W20	630	462 (210)
	1250	484 (220)
	2000	506 (230)
40 VCP-W25	630	462 (210)
	1250	484 (220)
	2000	506 (230)

① Does not include shipping carton.

Instructions for installation, operation,
and maintenance of type
VCP-W vacuum circuit breakers

Instruction Booklet IB131029EN
Effective March 2022

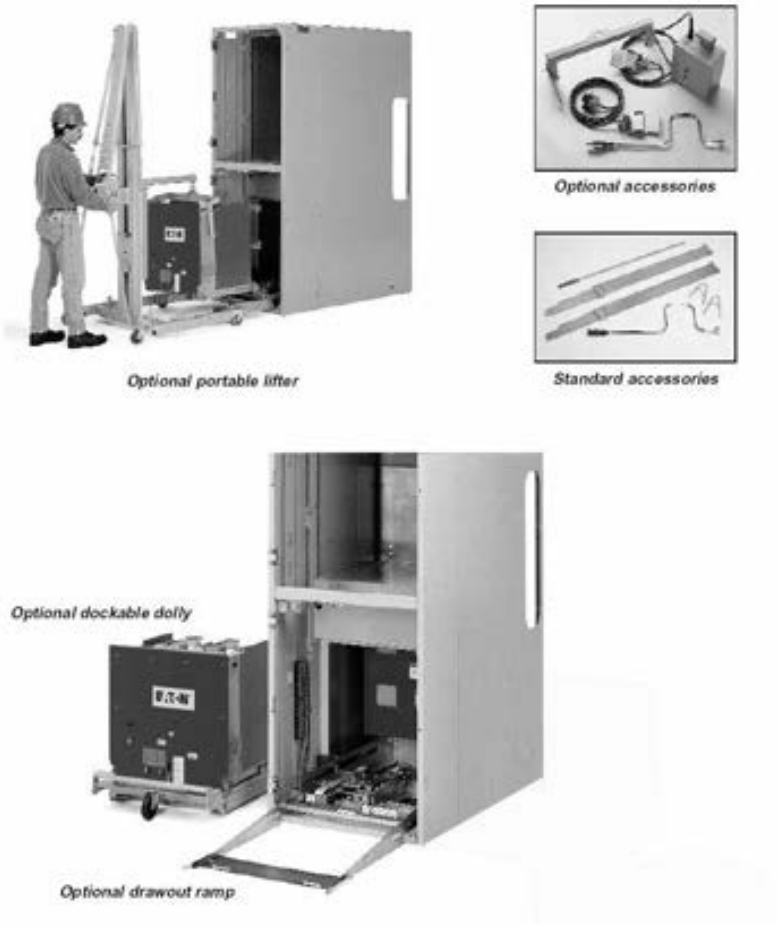

Figure 4. Typical VCP-W tools and accessories. (Note: products shown for representation only. New products may include design improvements and alternate nameplate configurations.)

Instruction Booklet IB131029EN
Effective March 2022

Instructions for installation, operation, and maintenance of type VCP-W vacuum circuit breakers

1. Front panel
2. Lift/pull handle
3. Wheel
4. Extension rail interlock
5. Mechanism enclosure
6. Lifting yoke opening
7. Primary disconnect (1200/2000)
8. Ground contact

Figure 5. Typical front view VCP-W vacuum circuit breaker. (See Figure 46 for an example of a roll on the floor wheel kit.)

Note: Not all products depicted by picture.

Instructions for installation, operation,
and maintenance of type
VCP-W vacuum circuit breakers

Instruction Booklet IB131029EN
Effective March 2022

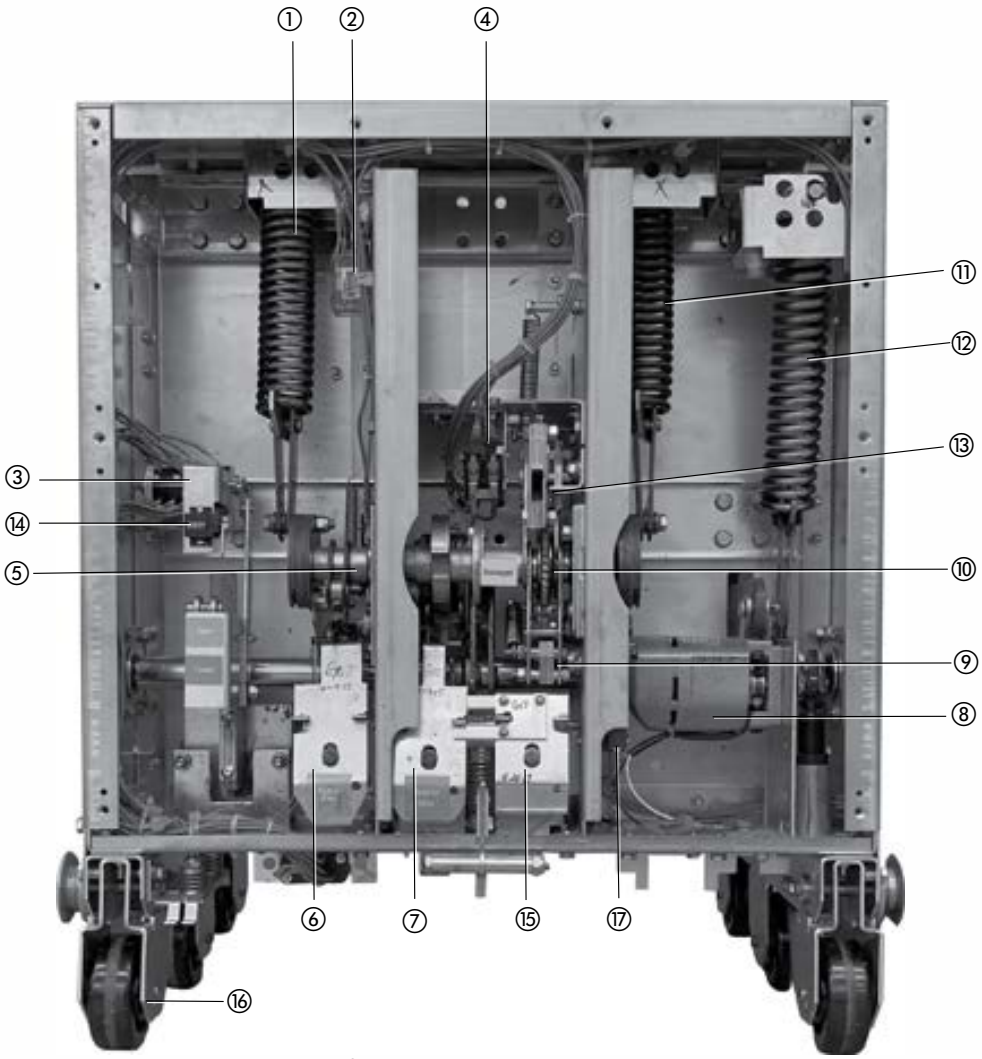

1. L.H. closing spring
2. Anti-pump relay
3. Auxiliary switch
4. Motor cutoff switch
5. Closing cam
6. Spring release (close coil) assembly
7. Shunt trip assembly
8. Charging motor
9. Charging pawl
10. Ratchet wheel
11. R. H. closing spring
12. Opening spring
13. Manual charge socket
14. Operation counter
15. Optional second shunt trip
16. Optional roll on floor wheels
17. Position switches

Figure 6. Typical VCP-W vacuum circuit breaker with front cover removed.

Instruction Booklet IB131029EN
Effective March 2022

Instructions for installation, operation, and maintenance of type VCP-W vacuum circuit breakers

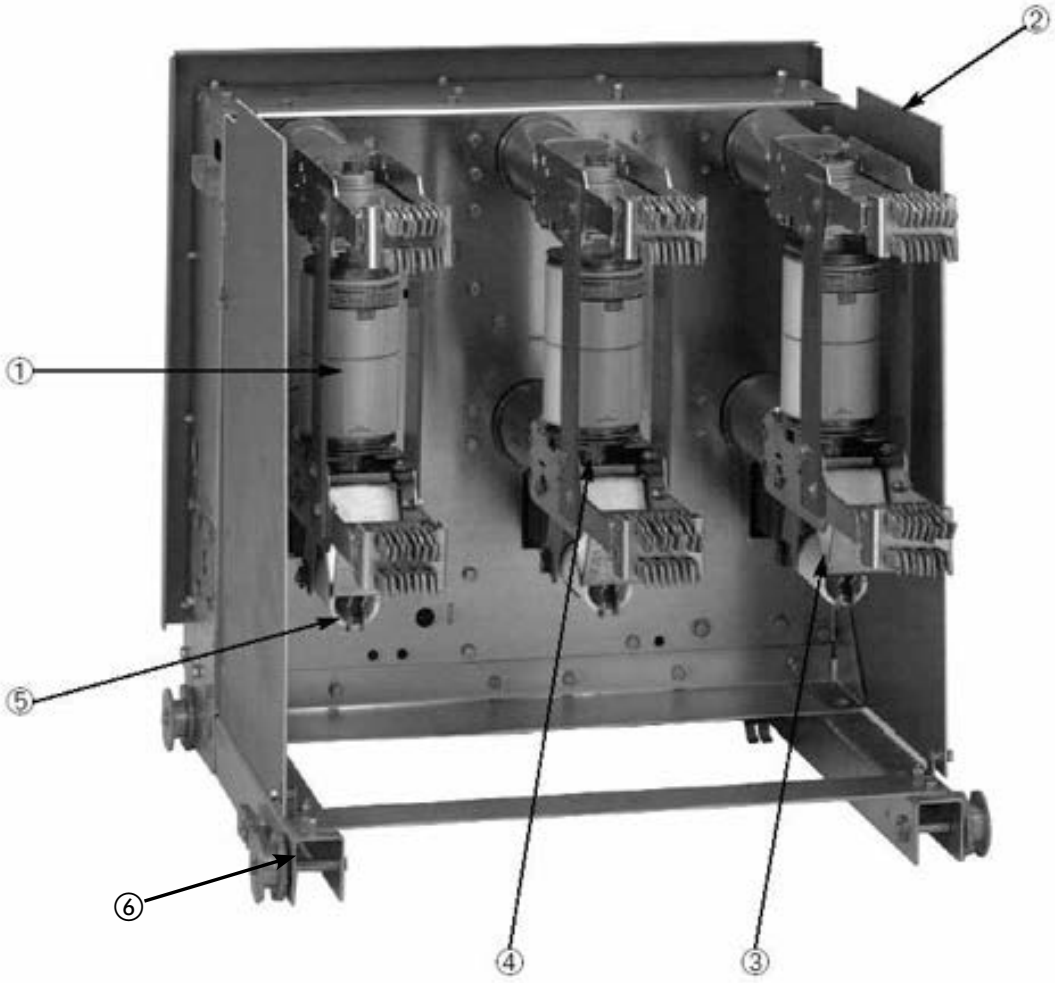

1. Vacuum interrupter
2. Phase barrier
3. V-flex current transfer system
4. Direct reading contact erosion indicator
5. Contact loading spring (wipe spring)
6. TOC operator (BPI pan assembly)

Figure 7. Typical rear view VCP-W 27 kV C-rated, IEC, and VCP-WXC.

Instructions for installation, operation,
and maintenance of type
VCP-W vacuum circuit breakers

Instruction Booklet IB131029EN
Effective March 2022

1. Vacuum interrupter
2. Direct reading contact erosion indicator
3. Contact loading spring (wipe spring)

Figure 8. Typical rear view VCP-W, 5/15 kV, k=1, MVA enhanced pole unit shown.

Instruction Booklet IB131029EN
Effective March 2022

Instructions for installation, operation, and maintenance of type VCP-W vacuum circuit breakers

1. Front panel
2. Nameplate
3. Operation counter
4. Open /closed indicator
5. Manual charge socket
6. Spring charge/discharge indicator
7. Manual open button
8. Manual close button
9. Catalog number label (Note: not on all breakers)

Figure 9. Typical VCP-W vacuum circuit breaker front cover arrangement.

Instructions for installation, operation, and maintenance of type VCP-W vacuum circuit breakers

Instruction Booklet IB131029EN
Effective March 2022

4. Initial inspection and installation

4.1 Introduction

⚠ WARNING

BEFORE PLACING THE CIRCUIT BREAKER IN SERVICE, CAREFULLY FOLLOW THE INSTALLATION PROCEDURE GIVEN BELOW. NOT FOLLOWING THE PROCEDURE CAN FAIL TO UNCOVER SHIPPING DAMAGE THAT MAY RESULT IN INCORRECT CIRCUIT BREAKER OPERATION LEADING TO DEATH, BODILY INJURY, AND EQUIPMENT DAMAGE.

Before attempting to put a circuit breaker in service, it should be carefully examined and operated manually and electrically. In addition, carefully examine the breaker for loose or obviously damaged parts. The following information is a guide for performing recommended checks and tests.

4.2 Manual operation check

Refer to Figures 10 and 11 and then proceed by placing the maintenance tool into the manual charge socket opening. Charge the closing springs with about 28 to 38 up and down strokes of the handle. When charging is complete, the closing crank goes over center with an audible CLICK and the springs Charged/Discharged indicator shows "Charged."

NOTICE

IF THE SPRINGS ARE TO BE CHARGED ON A CLOSED CIRCUIT BREAKER, NO CLICK IS HEARD AT THE END OF CHARGING OPERATION. DISCONTINUE CHARGING AND REMOVE THE MAINTENANCE TOOL AS SOON AS "CHARGED" FLAG IS FULLY VISIBLE. CONTINUED ATTEMPTS TO CHARGE FURTHER MAY RESULT IN DAMAGE TO THE MECHANISM.

Remove the maintenance tool. Close and trip the circuit breaker. Repeat several times.

4.3 Vacuum interrupter integrity

Using a dry, lint free cloth or paper towel, clean all the accessible insulating surfaces of the pole units. Conduct a vacuum interrupter integrity check as described in Section 6.

4.4 Insulation

Check the circuit breaker's primary and secondary insulation as described in Section 6.

4.5 Contact erosion and wipe

Manually charge the closing springs and close the circuit breaker. Check contact erosion and wipe as described in Section 6.

4.6 Primary circuit resistance

Check the primary circuit resistance as described in Section 6. The resistance should not exceed the values specified. Record the values obtained for future reference.

4.7 Nameplate

Compare the circuit breaker nameplate information with switchgear drawings for compatibility.

Figure 10. Type VCP-W circuit breaker manual charging handle in use.

4.8 Electrical operation check

After having completed all previous checks and tests, the circuit breaker is ready to be operated electrically. It is preferred that this check be made with the circuit breaker in a TEST position or by using a test cable, if the circuit breaker is outside the cell structure.

⚠ CAUTION

BEFORE INSERTING THE CIRCUIT BREAKER, EXAMINE THE INSIDE OF THE CELL STRUCTURE FOR EXCESSIVE DIRT OR ANYTHING THAT MIGHT INTERFERE WITH THE CIRCUIT BREAKER MOVEMENT.

⚠ WARNING

EXTREME CAUTION MUST BE EXERCISED TO INSURE THAT PRIMARY CIRCUITS ARE NOT ENERGIZED WHILE CHECKS ARE PERFORMED IN THE CIRCUIT BREAKER COMPARTMENT. FAILURE TO DO SO MAY RESULT IN PERSONAL INJURY OR DEATH.

The circuit breaker is normally tested electrically in its cell structure in the TEST position. To achieve the TEST position, first determine if the breaker cell has a BPI Pan Assembly, Figure 13 or a non-BPI Pan Assembly, Figure 14. Then follow the appropriate instructions in section 4.8.1 to move/lever the circuit breaker into the TEST position.

4.8.1 Circuit breaker insertion and removal

⚠ CAUTION

DO NOT USE ANY TOOL OTHER THAN THE LEVERING-IN CRANK PROVIDED TO LEVER THE CIRCUIT BREAKER FROM TEST OR CONNECTED POSITIONS. CORRECT OPERATION OF SOME OF THE INTERLOCKS IS DEPENDENT ON USE OF THE PROVIDED LEVERING-IN CRANK. PERSONAL INJURY OR EQUIPMENT DAMAGE COULD RESULT FROM THE USE OF A TOOL OTHER THAN THE PROPER LEVERING-IN CRANK.

Instruction Booklet IB131029EN
Effective March 2022

Instructions for installation, operation, and maintenance of type VCP-W vacuum circuit breakers

NOTICE

THE CIRCUIT BREAKER AND INTEGRAL LEVERING MECHANISM INCLUDES ALL NECESSARY INTERLOCKS THAT, WHEN INTERFACED WITH A COMPATIBLE STRUCTURE, WILL RENDER THE CIRCUIT BREAKER MECHANISM MECHANICALLY AND ELECTRICALLY TRIP-FREE DURING THE LEVERING PROCESS. FOR INFORMATION PERTAINING TO INDIVIDUAL INTERLOCKS, REFER TO PARAGRAPH 4.9 IN THIS SECTION.

Inserting breaker:

A. Lower compartment direct roll-in-breaker
Push the breaker into the breaker compartment until the breaker "T" handle latches over the moving block on the levering screw assembly. In this position, the breaker is considered in the DISCONNECT position.

B. Upper compartment or non-direct roll-in-breaker

1. The breaker compartment has an interlock assembly on the compartment levering assembly, located on both the left and right hand rail assemblies. The purpose of the interlock assembly is to prevent the breaker from being removed from the compartment without the extension rails in place.
2. In order to insert or remove a non-direct roll-in breaker, a set of extension rails must be inserted into the left hand and right hand rail assemblies. This is achieved by inserting the appropriate rail, identified with a label, diagonally into the slot such that the extension rail, when lowered, unlocks the interlock allowing an installed circuit breaker to roll forward. The rolling surfaces of the compartment rail and extension rail are flush.
3. In this position, the breaker can be inserted or removed from the breaker compartment (see Figures 11 and 12).

Figure 11. Insertion of the drawout extension rails.

Figure 12. Lifting and setting the breaker in the housing.

Checking pan operation:

A. TEST or DISCONNECT/TEST position

To operate the breaker at this time (TEST position mode), it is necessary to connect the secondary harness with the breaker.

Automatic secondary: For an automatically engaged secondary harness, lever the breaker into the TEST position identified by the breaker position indication (BPI) label.

Manual secondary: For a manually engaged secondary harness, pull the secondary plug handle forward until the secondary receptacle, located on the compartment levering pan, fully mates with the secondary breaker wiring plug.

Note: It is recommended that the power to the secondary connector be de-energized prior to manually engaging the secondaries to prevent damage to the secondary pins associated with the spring charging motor circuit.

Note: To prevent damage never rely on racking to engage secondary on a manually engaged secondary.

In these positions, the breaker control circuit can be tested offline (breaker is not connected to the primary circuit).

B. Racking the breaker to the CONNECTED position

1. Movement of the breaker from the TEST or DISCONNECT/TEST position to the CONNECTED position.
   a. The breaker will trip as the levering-in crank is pushed in to gain access to the hex drive nut on the levering system.
   b. Rotate the levering-in crank in a clockwise direction until the torque limiter on the levering-in crank "breaks free." As a position verification;
      - BPI pan assembly: the breaker cover plate MUST align with the black line associated with the CONNECTED position, location shown on the BPI label (Figure 13 item 7).
      - Non-BPI pan assembly: the red indicator on the levering system as shown through the window below the levering-in crank on the front of the levering system (Figure 14, item 7).

C. Racking the breaker from CONNECTED position to TEST or DISCONNECT/TEST position

BPI pan assembly:

1. Insert the levering-in crank onto the hex drive nut on the levering system. In order to engage the hex drive nut, you must push in the levering system slider.

Note: If the breaker is closed, it will trip as the levering-in crank is pushed in to gain access to the hex drive nut in the levering system.

2. Rotate the levering-in crank in a counterclockwise direction until the breaker is in the TEST or the DISCONNECT position.

Note: The breaker secondary control receptacle on the compartment levering system is automatically disengaged from the breaker secondary plug when moved to the DISCONNECT position.

Non-BPI pan assembly:

1. If the breaker is closed in the CONNECTED position, then access to the hex drive nut on the levering system will be denied. The breaker must be opened prior to levering operation being performed.
2. Insert the levering-in crank onto the hex drive nut on the levering system. In order to engage the hex drive nut, you must push in the levering system slider.
3. Rotate the levering-in crank in a counterclockwise direction until the breaker is in the DISCONNECT/TEST position.

Note: The breaker secondary control receptacle on the compartment levering system is automatically disengaged from the breaker secondary plug when moved to the DISCONNECT/TEST position.

Automatic/manual hybrid BPI pan assembly:

1. If the breaker is closed in the CONNECTED position, then access to the hex drive nut on the levering system will be denied. The breaker must be opened prior to levering operation being performed.
2. Insert the levering-in crank onto the hex drive nut on the levering system. In order to engage the hex drive nut, you must push in the levering system slider.
3. Rotate the levering-in crank in a counterclockwise direction until the breaker is in the DISCONNECT/TEST position.

Note: The breaker secondary control receptacle on the compartment levering system is automatically disengaged from the breaker secondary plug when moved to the DISCONNECT/TEST position.

Note: The legend for Figures 13 and 14 follow Figure 14.

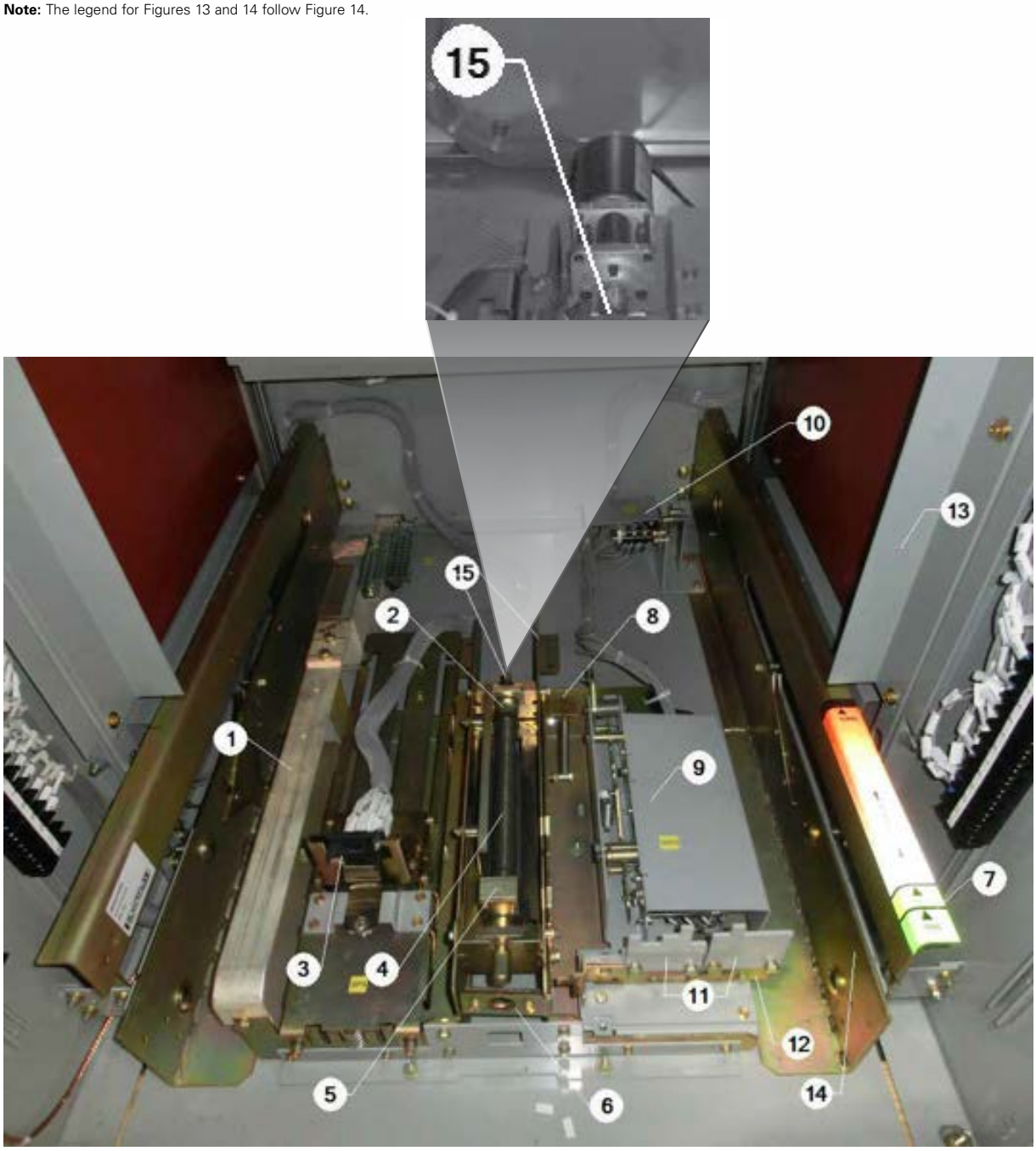

Figure 13. BPI pan assembly.

Instructions for installation, operation,
and maintenance of type
VCP-W vacuum circuit breakers

Instruction Booklet IB131029EN
Effective March 2022

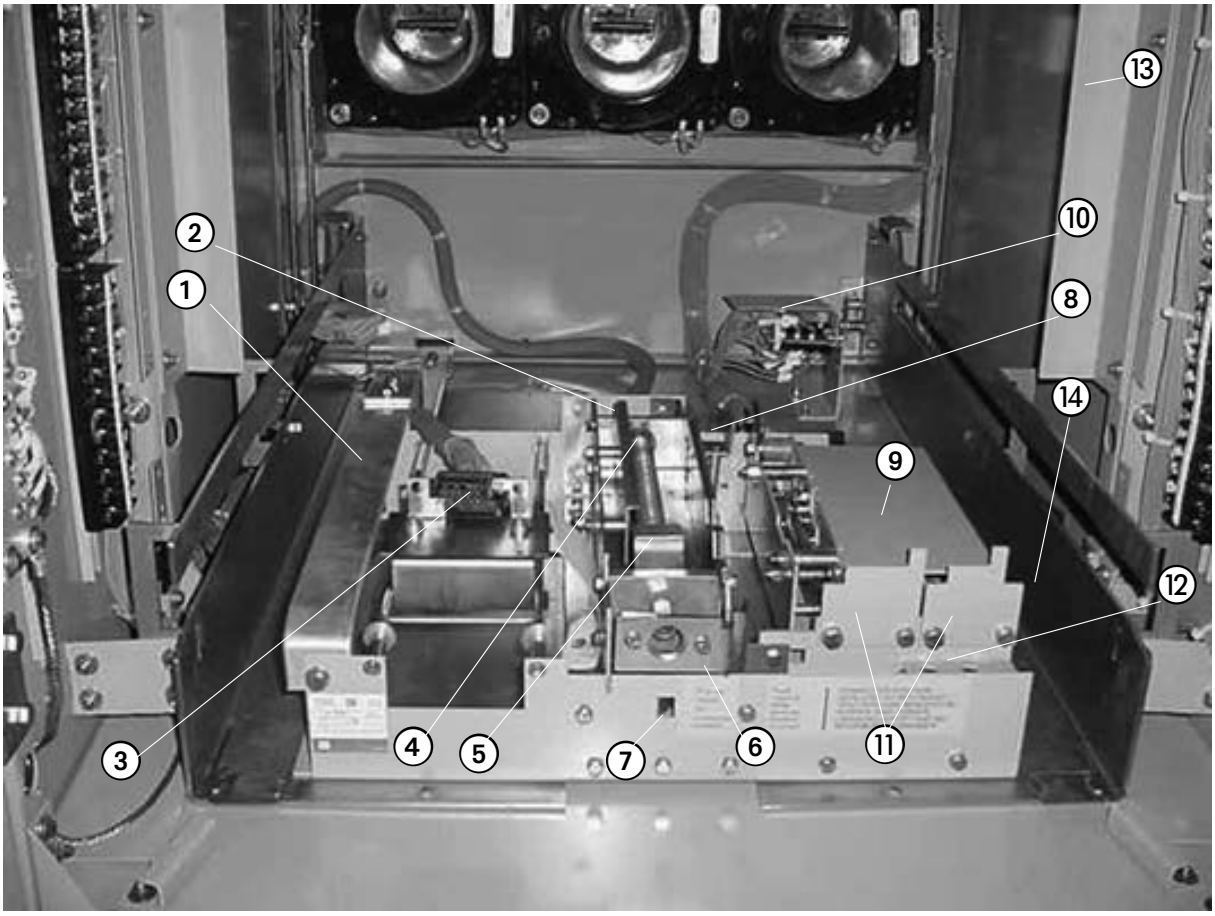

Legends for Figures 14 & 15.

1. Ground contacts
2. Levering system.
3. Automatic (BPI) or manual (non-BPI) secondary
4. Racking screw
5. Moving block
6. Slider
7. Breaker position indication
8. Slider interlocks
9. MOC switch
10. TOC switch
11. Coding plates
12. Provision for padlocking
13. Picture frame
14. Breaker rail
15. MR2 integral racking provisions (optional)

Figure 14. Non-BPI pan assembly.

Instruction Booklet IB131029EN
Effective March 2022

Breaker pan assembly:

Call out descriptions for Figure 13 and 14.

1. Grounding contact grounds the breaker in the DISCONNECT, TEST, and CONNECTED positions.
2. The levering system prevents removal of the breaker in any position other than the DISCONNECT position (BPI pan) or DISCONNECT/TEST position (non-BPI pan).
3. The control wiring is arranged for pullout disconnecting by means of a 25-point female receptacle arranged to connect to a male plug on the breaker. The secondary disconnect is the connection for the control leads between the removable breaker and the stationary housing.

   Automatic secondary: Figure 13 represents an automatically engaged secondary, as offered on the BPI pan assembly, requires no manual input from the customer to engage the secondary harness. The secondary harness will engage automatically when the breaker is levered-in to the discrete TEST position.

   The secondary harness will then disengage automatically when the breaker returns to the DISCONNECT position.

   Manual secondary: Figure 14 represents a manually engaged secondary assembly which requires the customer to engage the secondary harness manually when the breaker is in the DISCONNECT position. When engaged, the breaker will now be in the TEST position.

   Automatic/manual hybrid secondary (optional): Figure 47 represents an automatic engaging secondary with a manual release feature incorporated into the BPI pan assembly. It requires the customer to manually lift up the secondary release lever to allow the secondary harness to engage the breaker in the DISCONNECT/TEST position.

   The secondary harness will then disengage automatically when the breaker returns to the DISCONNECT/TEST position.
4. Racking screw performs breaker insertion and withdrawal.
5. Moving block couples to breaker for insertion and withdrawal.
6. Slider is used with #8 to prevent levering a closed breaker. May also be used in conjunction with #12 to padlock a breaker in either position.
7. Indicates when the breaker is in the fully connected position.

   Breaker position indication (BPI) label: Figure 13 represents positive indication of breaker location at any position through use of a colored label mounted on the top flange of the right hand rail assembly. Green indicates the DISCONNECT position, yellow indicates the TEST position, and red indicates the CONNECT position. Upon arriving at any of the three discrete positions; DISCONNECT, TEST, and CONNECT, there is a black mark that aligns with the breaker cover to indicate exact location.

   Standard indication: Figure 14 represents positive indication of the breaker in the CONNECT position by use of a red flag that rotates into viewing position when the breaker is fully connected.
8. **Slider interlocks:**
   BPI pan assembly: Figure 13 displays the "L" shaped slider interlock that enables tripping of a closed breaker by pushing in on the slider (item 6) that prevents access to the racking screw.

   Non-BPI pan assembly: Figure 14 displays the "Z" shaped slider interlock that prevents a closed breaker from being levered out of the cell.
9. The breaker mechanism-operated cell (MOC) switch is an assembly of switches that is operated by a lever on the breaker mechanism. It can contain as many as 15 normally closed and 15 normally open contacts (beneath the cover) in the standard design.

   The MOC switch is activated by the breaker closing. It extends a plunger out the bottom of the mechanism and pushes down on the MOC switch operating mechanism. This, in turn, transmits the motion to operate the switch.
10. The truck operated cell (TOC) switch has nine poles - four normally open and five normally closed contacts that change state as the breaker is levered to the connected position. As the breaker is being levered into the connected position, a bracket on the breaker pushes the TOC switch lever during the last inch of travel. As a result, the TOC switch can be used to electrically indicate whether or not the breaker is in the connected position (beneath cover).
11. Code plates: (see Interface interlocks/interfacing check, Section 4.9.1).
12. Provision for padlocking a breaker in any position. Also a location for a key interlock.
13. Picture frame provides a closed barrier to the primary compartment when the breaker is connected.
14. Rail on which the breaker rolls.
15. Optional MR2 integral racking provisions for inclusion during manufacturing or aftermarket.

For additional information on the levering mechanism, refer to paragraph 5.6 in this manual.

4.8.2 Circuit breaker performance check

1. Study and understand the electrical drawings furnished with each switchgear system.
2. Install the circuit breaker in the DISCONNECT position.
3. Engage secondaries or lever breaker to TEST position to automatically engage secondaries:

   Automatic secondary: To engage secondary harness, lever the breaker to the TEST position to engage the control circuit.

   Manual secondary: To engage secondary harness, lift and pull the secondary disconnect forward to engage the control circuit.

   Note: It is recommended that the power to the secondary connector be de-energized prior to manually engaging the secondaries to prevent damage to the secondary pins associated with the spring charging motor circuit.

   Automatic/manual hybrid secondary (optional): To engage secondary harness, lift and release the secondary disconnect so that it automatically slides forward to engage the control circuit.
4. Verify breaker operation; once the secondaries are engaged the closing springs will automatically charge unless inhibited by the switchgear control circuit, the condition will be indicated by a Spring Charged/Discharged indicator on the front of the circuit breaker (Figure 9). In addition, the status of the main contacts, open or closed, is indicated on the front of the circuit breaker.

   Close and trip the circuit breaker several times to verify closing and tripping operations. Conclude by closing the circuit breaker. The circuit breaker is now closed in the TEST position with springs charged.

Instructions for installation, operation, and maintenance of type VCP-W vacuum circuit breakers

Instruction Booklet IB131029EN
Effective March 2022

Figure 15. Engaging extension rails in a lower circuit breaker compartment.

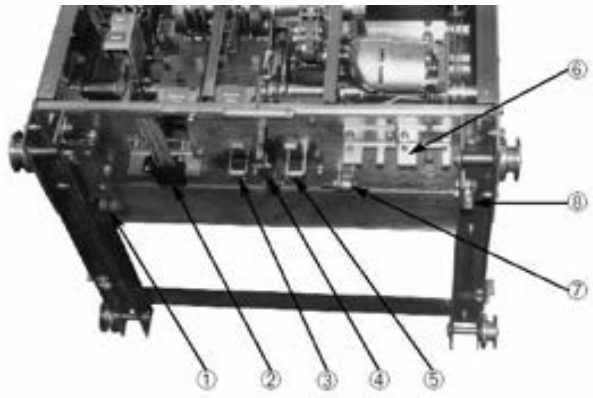

1. Ground contact
2. Secondary disconnect
3. Close floor tripper
4. Levering latch
5. Trip floor tripper
6. Code plates
7. MOC operator
8. TOC operator (Non-BPI pan assembly

Figure 16. Typical VCP-W circuit breaker bottom view.

4.9 Circuit breaker/structure interfacing

⚠ WARNING

NEVER DISABLE OR DEFEAT ANY INTERLOCKS. THEY ARE INTENDED FOR PROPER AND SAFE OPERATION. FAILURE TO COMPLY COULD RESULT IN DEATH, SEVERE PERSONAL INJURY, AND/OR PROPERTY DAMAGE DUE TO THE HAZARDOUS VOLTAGE PRESENT.

Type VCP-W circuit breakers are supplied with a series of interlocks to insure safe and proper interfacing between the circuit breaker and its compartment. Specific interlocks are described in the next paragraph to provide proper familiarization. An interfacing check should be performed as also described in the next paragraph.

4.9.1 Interface interlocks/interfacing check

Refer to Figures 11, 13, and 18 for visual interlock and interface check references. The following interlocks are provided to ensure safe and proper operation.

Code plates

A coding plate is fastened to the bottom front edge of the breaker compartment. There is also a coding plate fastened to the front of the breaker. If the breaker has a lower interrupting rating than the rating of the compartment, or if the voltage and continuous current characteristics do not match, the coding plate on the compartment will prevent the entrance of the breaker into the compartment. In general, per the IEEE standards, a higher rated breaker is always permitted to be inserted into a lower rated cell; however, there are certain physical characteristics of the breakers that may still prevent this from happening.

NOTICE

EVEN WITH THE CODING PLATES, IT IS POSSIBLE TO PUT A BREAKER INTO THE COMPARTMENT THAT'S CONTROL WIRING IS NOT COORDINATED WITH THAT OF THE COMPARTMENT. ALWAYS CHECK THE SHOP ORDER DRAWING TO MAKE SURE THE CONTROL WIRING OF THE BREAKER AND THE COMPARTMENT ARE THE SAME.

Maintenance interlock

This interlock trips, closes, and trips the circuit breaker if it is closed and charged as the circuit breaker is withdrawn from the DISCONNECT (BPI pan assembly) or DISCONNECT/TEST position on to the extension rails or rolled out of the cell for the direct roll-in-breaker. The circuit breaker open and closing springs are, therefore, discharged. A closed breaker cannot be moved into the DISCONNECT (BPI pan assembly) or DISCONNECT/TEST position from the extension rails, or from the floor as a roll-on-floor breaker. This interlock consists of the interaction between the switchgear cell features and the close floor tripper and the trip floor tripper found under the breaker per Figure 16.

Instruction Booklet IB131029EN
Effective March 2022

Figure 17. Pulling secondary disconnect cage to engage secondaries in TEST position (old version shown). New version will have BPI pan with automatic secondaries.

Figure 18. Engaging levering-in crank.

Levering interlock

If the breaker is closed in the TEST position, then as the levering-in crank is pushed in to gain access to the hex drive nut on the levering system the breaker will trip Open automatically.

If the circuit breaker is closed as the levering-in crank is engaged to move the circuit breaker from the CONNECTED to the TEST position, the circuit breaker will do one of the following.

1. **BPI pan assembly (Figure 13):** If the breaker is closed in the CONNECTED position, then as levering-in crank is pushed in to gain access to the hex drive nut on the levering system the breaker will trip Open automatically.
2. **Non-BPI pan assembly (Figure 14):** If the breaker is closed in the CONNECTED position, then access to the hex drive nut on the levering system will be denied when pushing in the levering-in crank. The breaker must be opened prior to the levering operation being performed.

   Automatic/manual hybrid secondary (optional - Figure 47): It will function the same as the Non-BPI pan assembly above.

Positive Interlock

BPI pan assembly (Figure 13): The "L" shaped slider interlock that enables tripping of a closed breaker by pushing in on the slider (item 6) that protects the racking screw. If desired, the customer can request the "Z" bracket to be added to the BPI pan assembly if the switchgear design permits it.

Non-BPI pan assembly (Figure 14): The "Z" shaped slider interlock that prevents a closed breaker from being levered out of the cell.

Automatic/manual hybrid secondary (optional - Figure 47): It will function the same as the Non-BPI pan assembly above due to the replacement of the "L" bracket with the "Z" bracket.

Negative interlock

The negative interlock prevents the circuit breaker from closing between the CONNECTED and TEST positions.

Position closing interlock

The circuit breaker is prevented from closing automatically when it is moved from the TEST to the CONNECTED position if the closing switch is maintained during the levering-in operation.

Position withdrawal interlock

This interlock prevents the circuit breaker from being withdrawn by pulling unless it is in the DISCONNECT or DISCONNECT/TEST position.

Extension rail interlock

The extension rail interlock prevents the circuit breaker from being withdrawn out of its compartment unless the extension rails or the breaker lifter are properly engaged to the fixed rails, or the lower cell is configured for a direct roll-in-breaker.

Overall system interlock check

The correct operation of provided interlocks should be confirmed. Keep in mind that an interfacing check is made with a compatible structure. As such, the instructions provided here may overlap with the instructions provided with the assembly. In any case, all provided interlocks should be confirmed. Review paragraph 4.8.1 before proceeding if additional instructions are needed on insertion and removal of a circuit breaker.

At the conclusion of the operations check as described in paragraph 4.8.2, the circuit breaker was closed in the TEST position with its springs charged. Perform one of the following depending on the slider interlock (also called positive interlock) style.

BPI pan assembly:

Engage the levering-in crank and the circuit breaker will automatically trip and the MOC switches will operate if the circuit breaker cell is equipped with MOC switches designed to operate in the TEST position.

Lever the circuit breaker towards the CONNECTED position. As the circuit breaker moves, protective compartment shutters will automatically begin to open uncovering fixed primary contacts.

TOC switches will also operate once the CONNECTED position is reached, if TOC switches are provided in the structure. Remove the levering-in crank at this point.

Close the circuit breaker. Any provided MOC switches will operate and the motor closing springs will charge if control power is available.

Engage the levering-in crank. The slider can be pushed in to engage the levering-in crank and the circuit breaker will automatically trip. Lever the circuit breaker out approximately halfway towards the TEST position.

Attempt to lift the circuit breaker lift/pull handle to pull the circuit breaker out. The position withdrawal interlock will prevent lifting the handle high enough to disengage the levering latch from the nut. This prevents the circuit breaker from being pulled out.

Non-BPI pan assembly:

Engage the levering-in crank and the circuit breaker will automatically trip and the MOC switches will operate if the circuit breaker cell is equipped with MOC switches designed to operate in the TEST position.

Lever the circuit breaker towards the CONNECTED position. As the circuit breaker moves, protective compartment shutters will automatically begin to open uncovering fixed primary contacts. TOC switches will also operate once the CONNECTED position is reached. TOC switches are provided in the structure. Remove the levering-in crank at this point, if equipped with this option.

Close the circuit breaker. Any provided MOC switches will operate and the motor closing springs will charge if control power is available.

Attempt to engage the levering crank. The slider cannot be pushed far enough to engage the levering-in crank. Trip the circuit breaker, engage the levering-in crank, and lever the circuit breaker out approximately halfway towards the DISCONNECT/TEST position.

Attempt to lift the circuit breaker lift/pull handle to pull the circuit breaker out. The position withdrawal interlock will prevent lifting the handle high enough to disengage the levering latch from the nut. This prevents the circuit breaker from being pulled out.

Attempt to close the circuit breaker by pushing the manual close button. The circuit breaker will go trip free (springs discharge but circuit breaker will not close). Lever the circuit breaker to the DISCONNECT/TEST position. The secondary contacts will disengage automatically.

BPI and non-BPI pan assembly:

If the extension rails are installed, then remove the extension rails. Disengage the levering latch by lifting the handle on the circuit breaker and attempt to pull the circuit breaker out. The circuit breaker will not move out more than two inches beyond the DISCONNECT or DISCONNECT/TEST position. Push the circuit breaker back to the DISCONNECT or DISCONNECT/TEST position. Engage the extension rails. Once again disengage the levering latch and pull the circuit breaker out. The circuit breaker will trip, close and trip as it comes out on to the extension rails from the DISCONNECT or DISCONNECT/TEST position.

Automatic/manual hybrid secondary (optional - Figure 47):

It will function the same as the Non-BPI pan assembly above due to the replacement of the "L" bracket with the "Z" bracket.

NOTICE

THE INTERFACE CHECKS OUTLINED IN THIS MANUAL AND THE MANUAL PROVIDED WITH THE ASSEMBLY STRUCTURE ARE INTENDED TO VERIFY SAFE AND PROPER OPERATION. IF OBSERVED CONDITIONS ARE NOT AS DESCRIBED, CONTACT EATON FOR ASSISTANCE.

5. Description and operation

5.1 Introduction

Type VCP-W, VCPW-SE, VCP-WC, and VCPW-ND vacuum circuit breakers are horizontal drawout designs for use in metal-clad switchgear compartments. Most ratings can be stacked two high in a vertical section resulting in a considerable savings of floor space.

Vacuum interrupters are used with all circuit breakers to close and open the primary circuit. All VCP-W circuit breakers are operated by a front mounted spring type stored energy mechanism (Figure 6). The stored energy mechanism is normally charged by an electric motor, but can be charged manually with the manual maintenance tool. Since the same basic, front accessible mechanism is used for all VCP-W circuit breakers, a minimum investment in spare parts is required.

The primary insulation used with Type VCP-W circuit breakers is flame retardant and track resistant glass polyester except for the Type VCPW-SE circuit breaker. The VCPW-SE special environment circuit breaker design utilizes cycloaliphatic epoxy for its primary insulation. "Fast On" type secondary control terminations are used on Types VCP-W, VCP-WC, and VCPW-ND circuit breakers, while the Type VCPW-SE circuit breaker utilizes ring type secondary control terminations.

The rest of this section describes the overall operation of the VCP-W circuit breaker as well as the function and operation of all major sub-assemblies and/or parts. Keep in mind that VCP-W will be used throughout the text when referring to any one of the three types of circuit breakers, unless there is a specific difference between VCP-W, VCPW-SE, VCP-WC, and VCPW-ND.

5.2 Interrupter assembly

Vacuum interrupters are mounted vertically and supported from the fixed stem which is clamped or bolted to the top conductor. The current transfer system consists either of a series of plated, high conductivity copper leaf conductors that are pressed on the movable interrupter stem or a plated high conductivity copper shunt bolted to the movable interrupter stem. These designs provide current flow with low electrical and thermal resistance. Utilizing these non-sliding current transfer systems between the movable stem and the breaker main conductor eliminates the need for maintenance. Multiple finger, floating type primary disconnecting contacts at the ends of the top and bottom conductors provide a means for interfacing with the primary conductors mounted in the switchgear (Figure 19).

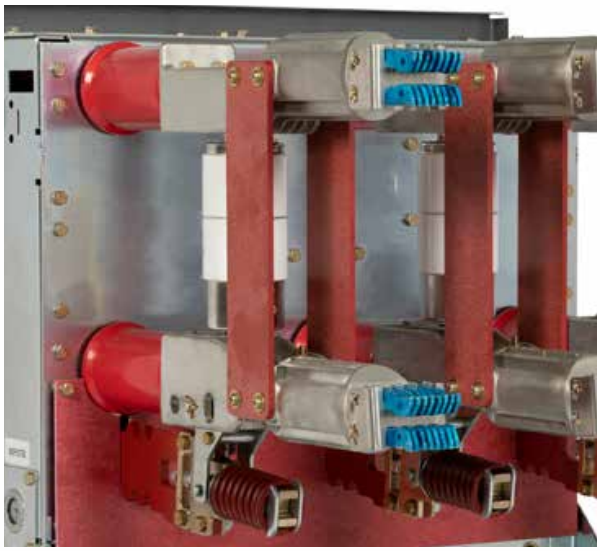

Figure 19. Typical VCP-W rear view showing vacuum interrupters and current carrying system.

Direct acting insulated operating rods in conjunction with the circuit breaker's mechanism provide a fixed amount of interrupter movable stem motion. This motion is directly related to the interrupter's "wipe" and "stroke," each of which is discussed in detail later in this section.

5.2.1 Vacuum interrupter

Type VCP-W vacuum circuit breakers utilize vacuum interrupters for interruption and switching functions. The vacuum interrupters use petal type copper chrome contacts for superior dielectric strength, better performance characteristics, and lower chop current. Vacuum interruption provides the advantages of enclosed interrupters, reduced size and weight, short interrupting time, long life, reduced maintenance, and environmental compatibility.

Arc interruption is simple and fast (Figure 18). In the closed position, current flows through the interrupter. When the contacts are opened, the arc is drawn between the contact surfaces. It is moved rapidly around the slotted contact surfaces by a self-induced magnetic force, which prevents gross contact erosion as well as the formation of hot spots on contact surfaces. The arc burns in an ionized metal vapor which continually leaves the contact area and condenses on the surrounding metal shield.

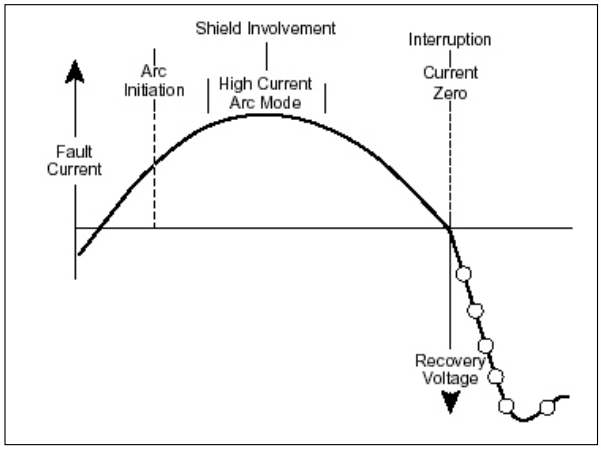

Figure 20. Graphic representation of arc interruption.

At current zero, the arc is extinguished and vapor production ceases. Very rapid dispersion, cooling, recombination, and deionization of the metal vapor plasma, together with the fast condensation of metal vapor products, cause the vacuum to be quickly restored. Hence, the opened contacts withstand the transient recovery voltage.

5.2.2 Contact erosion indication

The purpose of a contact erosion indicator is to monitor the erosion of the vacuum interrupter contacts, which is very minimal over time with vacuum interrupters utilizing copper-chrome contact material. If contact erosion reaches 1/8 in. (3.18 mm), the interrupter must be replaced. A horizontal contact erosion indicator mark is located on the moving stem of the interrupter (Figures 28 and 30).

In order to determine if the contacts have eroded to the extent that the interrupter must be replaced, observe the erosion mark placed on each moving stem from the rear of the breaker with the breaker closed. The interrupter is satisfactory if the mark on the stem is visible with the breaker closed. The vacuum interrupter must be replaced if the mark is no longer visible.

In order to determine if the contacts have eroded to the extent that the interrupter must be replaced, observe the erosion mark placed on each moving stem from the rear of the breaker with the breaker closed. The interrupter is satisfactory if the mark on the stem is visible with the breaker closed. The entire interrupter assembly must be replaced if the mark is no longer visible.

5.2.3 Loading spring indicator

The loading spring indicator on the breaker drive rods is an additional method provided to indicate conditions within the interrupter. The indicator is used to indicate whether the contact springs are maintaining the adequate contact pressure (wipe) to keep the contacts closed. Severe contact erosion would result in an unacceptable wipe indication from the indicator (Figure 30). Depending upon the structural design, a small mirror may be required to inspect all three poles.

Note that the actual drive rod design and appearance of the indicator can vary from one circuit breaker rating to another, but all designs are considered in Figure 30. When making this inspection, observe the color of the contact springs and the indication geometry and match to the corresponding images in Figure 30. Figure 30 illustrates what the actual indicator appearance will be for satisfactory wipe and unsatisfactory wipe.

5.2.4 Contact wipe and stroke

Contact wipe is the indication of (1) the force holding the vacuum interrupter contacts closed and (2) the energy available to hammer the contacts open with sufficient speed for interruption.

Stroke is the gap between fixed and moving contacts of a vacuum interrupter with the circuit breaker open.

The circuit breaker mechanism provides a fixed amount of motion to the operating rods. The first portion of the motion is used to close the contacts (i.e. stroke) and the remainder is used to further compress the pre-loaded wipe spring. This additional compression is called wipe. Wipe and stroke are thus related to each other. As the stroke increases due to the erosion of contacts, the wipe decreases.

The advanced design of all VCP-W vacuum circuit breakers eliminates the need for field adjustments of wipe or stroke. In the unlikely event wipe needs to be adjusted, the latest design of the 5, 8 and 15 VCP-W breakers extend breaker life by providing the ability to re-adjust wipe in the field. **REFERENCE INSTRUCTIONAL LEAFLET 81A7010H01 FOR INSTRUCTIONS FOR DRIVE ROD WIPE ADJUSTMENT FOR TYPE 5VCP-W, 8VCP-W, AND 15VCP-W BREAKERS.**

⚠ CAUTION

EXCEPT FOR TYPE 5 VCP-W, 8 VCP-W, AND 15 VCP-W BREAKERS, THERE IS NO PROVISION FOR IN-SERVICE ADJUSTMENTS OF CONTACT WIPE AND STROKE. ALL SUCH ADJUSTMENTS ARE FACTORY SET AND SHOULD NOT BE ATTEMPTED IN THE FIELD.

5.2.5 Phase barriers

Phase barriers on all VCP-W circuit breakers are made of glass polyester. Table 29 gives the number and configuration of the barriers required for each circuit breaker rating.

Instructions for installation, operation, and maintenance of type VCP-W vacuum circuit breakers

Instruction Booklet IB131029EN
Effective March 2022

Table 28. VCP-W & VCP-WC circuit breaker barrier configurations.

ANSI breaker identification	Amps	Reference vacuum interrupter diameter inches	Number of barriers
50VCPW-ND250	1200	4	0
5VCP-W250	1200	4.2	0
	2000	4.2	0
	3000	5	0
5VCP-W350	1200	5	0
	2000	5	0
	3000	5	0
8VCP-W500	1200	4.2	0
	2000	4.2	0
	3000	5	0
15VCP-W500	1200	3.3	0
	2000	4.2	0
	3000	5	0
15VCP-W750	1200	4.2	0
	2000	4.2	0
	3000	5	0
15VCP-W1000	1200	5	0
	2000	5	0
	3000	5	0
150VCP-W63	1200	7	2 (INNER) 2 in cell
	2000	7	2 (INNER) 2 in cell
	3000	7	2 (INNER) 2 in cell
270VCP-W	630	4	2 (INNER) 2 in cell
	1200	4 or 5	2 (INNER) 2 in cell
	2000	5	2 (INNER) 2 in cell
50VCP-W25C	1200	4	2 (INNER) 2 in cell
	2000	5	2 (INNER) 2 in cell
	3000	7	2 (INNER) 2 in cell
150VCP-W25C	1200	4	2 (INNER) 2 in cell
	2000	5	4
	3000	7	2 (INNER) 2 in cell
50VCP-W40C 150VCP-W40C 50VCP-W50C 150VCP-W50C	1200	5	2 (INNER) 2 in cell
	2000	5	2 (INNER) 2 in cell
	3000	7	2 (INNER) 2 in cell
50VCP-W63C 150VCP-W63C	1200	7	2 (INNER) 2 in cell
	2000	7	2 (INNER) 2 in cell
	3000	7	2 (INNER) 2 in cell

Note: Although only standard ANSI rated VCP-W breakers are given in these configurations, all VCPW-SE and IEC rated breakers follow the same barrier configurations based on the diameter of the vacuum interrupter.

VCP-W (K = 1) circuit breaker barrier configurations.

ANSI breaker identification	Amps	Reference vacuum interrupter diameter inches	Number of barriers
5VCP-W25	1200	3.3	0
	2000	4.2	0
	3000	5	0
5VCP-W40	1200	4.2	0
	2000	4.2	0
	3000	5	0
5VCP-W50	1200	5	0
	2000	5	0
	3000	5	0

VCP-W (K = 1) circuit breaker barrier configurations.

ANSI breaker identification	Amps	Reference vacuum interrupter diameter inches	Number of barriers
50VCP-W63	1200	7	2 (INNER), 2 in cell
	2000	7	2 (INNER), 2 in cell
	3000	7	2 (INNER), 2 in cell
8VCP-W40	1200	4.2	0
	2000	4.2	0
	3000	5	0
8VCP-W50	1200	5	0
	2000	5	0
	3000	5	0
15VCP-W25	1200	3.3	0
	2000	4.2	0
	3000	5	0
15VCP-W40	1200	4.2	0
	2000	4.2	0
	3000	5	0
15VCP-W50	1200	5	0
	2000	5	0
	3000	5	0
150VCP-W63	1200	7	2 (INNER), 2 in cell
	2000	7	2 (INNER), 2 in cell
	3000	7	2 (INNER), 2 in cell

⚠ WARNING

DO NOT PLACE THE CIRCUIT BREAKER IN ITS COMPARTMENT WITHOUT THE PHASE BARRIERS IN PLACE. THE ABSENCE OF THE BARRIERS COULD CAUSE A CATASTROPHIC FAILURE DURING INTERRUPTION OR OPERATION RESULTING IN DEATH, SEVERE PERSONAL INJURY, AND/OR PROPERTY DAMAGE.

The multiple finger primary disconnect contacts are silver plated and waxed. In order to provide visual indication of the presence of wax, a blue dye is added during the waxing process to give a bluish color to the disconnect contacts. The wax acts as a conductive lubricant without attracting dirt. For this reason the contacts do not require any additional lubricant.

Instruction Booklet IB131029EN
Effective March 2022

5.3 Stored energy mechanism

⚠ WARNING

KEEP HANDS AND FINGERS AWAY FROM THE CIRCUIT BREAKER'S INTERNAL PARTS WHILE THE CIRCUIT BREAKER CONTACTS ARE CLOSED OR THE CLOSING SPRINGS ARE CHARGED. THE CIRCUIT BREAKER CONTACTS MAY OPEN OR THE CLOSING SPRINGS DISCHARGE CAUSING A CRUSHING INJURY. DISCHARGE THE SPRINGS AND OPEN THE CIRCUIT BREAKERS BEFORE PERFORMING ANY CIRCUIT BREAKER MAINTENANCE, INSPECTION, OR REPAIR.

The spring stored energy operating mechanism is arranged vertically in front of all VCP-W circuit breakers (Figure 5). It includes all the elements for storing the energy, closing and tripping of the circuit breaker, as well as manual and electrical controls. The manual controls are all front accessible. Motion to close and open the interrupter contacts is provided through operating rods connecting the mechanism pole shaft to the bell cranks of the interrupter assemblies.

5.3.1 Operation of stored energy mechanism

The mechanism stores the closing energy by charging the closing springs. The mechanism may rest in any one of the four positions shown in Figure 19 and as follows:

a. Breaker element open, closing springs discharged;
b. Breaker element open, closing springs charged;
c. Breaker element closed, closing springs discharged; and
d. Breaker element closed, closing springs charged.

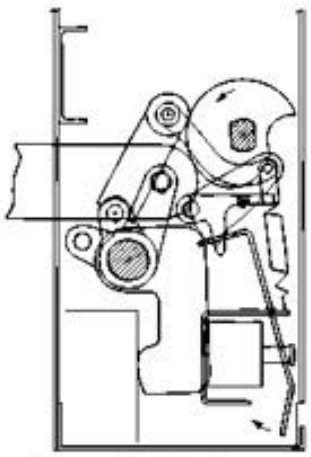

Figure 20a Breaker open and closing spring discharged

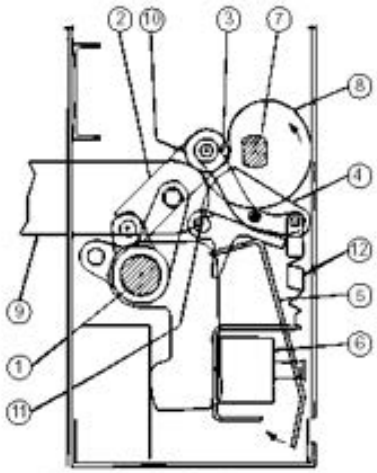

Figure 20b Breaker open and closing spring discharged

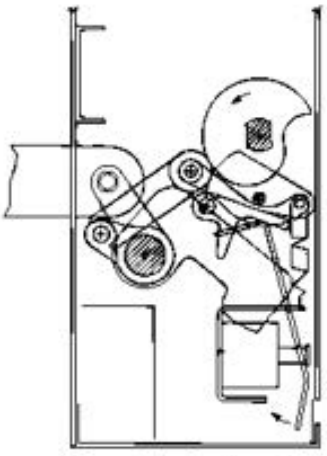

Figure 20c Breaker closed and closing spring discharged

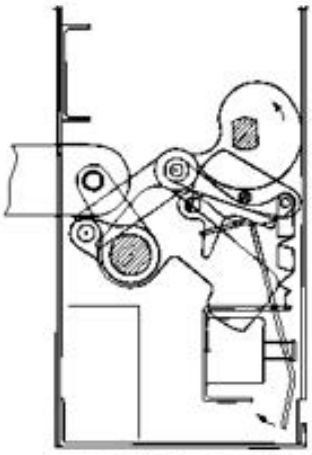

Figure 20d Breaker closed and closing spring discharged

1. Pole shaft
2. Main link
3. Banana link
4. Trip latch
5. Shunt trip lever
6. Shunt trip coil
7. Cam shaft
8. Closing cam
9. Operating rod
10. Main link roller
11. Trip bar "D" shaft
12. Trip latch reset spring

Figure 21. Closing cam and trip linkage.

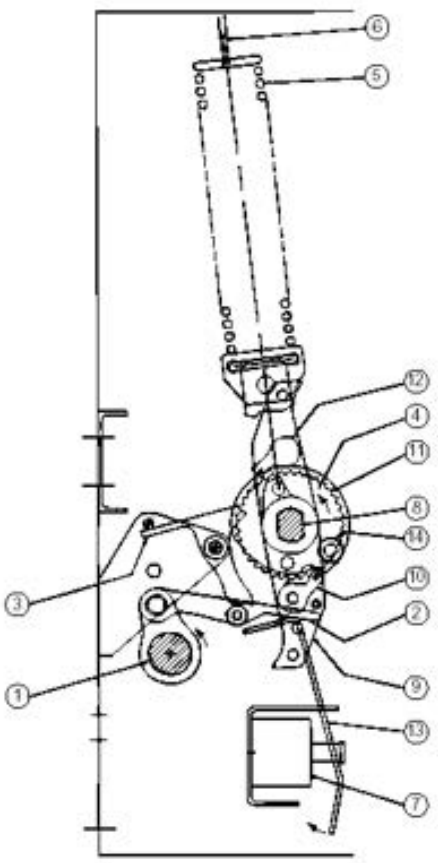

Breaker open, springs discharged

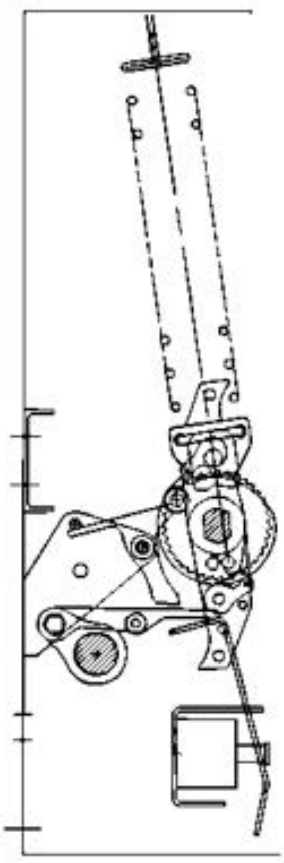

Breaker closed, springs discharged

1. Pole shaft
2. Anti-close interlock
3. Spring release (close) latch
4. Spring crank
5. Closing spring
6. Closing spring fixed end
7. Spring release (close) coil
8. Cam shaft
9. Motor ratchet lever
10. Drive pawl
11. Ratchet wheel
12. Holding pawl
13. Spring release (close) clapper
14. Spring release latch (close roller)

Figure 22. Charging schematic.

5.3.2 Charging

Figure 20 is a schematic view of the spring charging parts of the stored energy mechanism.

The major component of the mechanism is a cam shaft assembly which consists of a drive shaft to which are attached two closing spring cranks (one on each end), the closing cam, drive plates, and a free-wheeling ratchet wheel. The ratchet wheel is actuated by an oscillating mechanism driven by the motor eccentric. As the ratchet wheel rotates, it pushes the drive plates which in turn rotate the closing spring cranks and the closing cam with it.

The closing spring cranks have spring ends connected to them, which are in turn coupled to the closing springs. As the cranks rotate, the closing springs are charged. When the closing springs are completely charged, the spring cranks go over dead center, and the closing stop roller comes against the spring release latch. The closing springs are now held in the fully charged position.

Closing springs may also be charged manually. Insert the maintenance tool in the manual charging socket. Move it up and down approximately 28 to 38 times until a clicking sound is heard, and the closing springs charging indicator indicates "Charged." Any further motion of the maintenance tool will result in free wheeling of the ratchet wheel.

5.3.3 Closing operation

Figure 19 shows the position of the closing cam and tripping linkage. Note that in Figure 19a in which the circuit breaker is open and the closing springs are discharged, the trip "D" shaft and trip latch are in the unlatched position.

Once charged, the closing springs can be released to close the circuit breaker by moving the spring release latch out of the way. This is done electrically or manually by depressing the spring release lever, which turns the spring release latch out of the way of the closing stop roller. The force of the closing spring rotates the cam shaft through the spring cranks. The closing cam, being attached to the camshaft, in turn rotates the pole shaft through the main link to close the circuit breaker.

In Figure 19c the linkage is shown with the circuit beaker in the closed position before the closing springs have been recharged. Interference of the trip "D" shaft with the trip latch prevents the linkage from collapsing, and the circuit breaker is held closed.

Figure 19d shows the circuit breaker in the closed position after the closing springs have been recharged. Note that the spring charging rotates the closing cam by one-half turn. Since the cam surface in contact with the main link roller is cylindrical in this region, the spring charging operation does not affect the mechanism linkage.

Since the primary contacts are completely enclosed in the vacuum interrupter and not adjustable in any way, a "Slow Close" capability is not provided with VCP-W circuit breakers.

5.3.4 Tripping operation

When the trip "D" shaft is turned either by the trip button or trip coil, all links return to the original "Open" condition shown in Figure 19a.

5.3.5 Trip free operation

When the manual trip button is held depressed, any attempt to close the circuit breaker results in the discharge of the closing springs without any movement of the pole shaft or vacuum interrupter stem.

5.4 Control schemes

There are two basic control schemes for VCP-W circuit breakers: one for DC control and one for AC control voltages (Figure 21), however, there are many other more advanced control schemes that can be configured by the switchgear provider. There may be different control voltages or more than one tripping element, but the principal mode of operation is as follows.

As soon as the control voltage is applied, the spring charging motor automatically starts charging the closing springs. When the springs are charged, the motor cut off LS1/bb switch turns the motor off. The circuit breaker may be closed by making the control switch close (CS/C) contact. Automatically upon closing of the circuit breaker, the motor starts charging the closing springs. The circuit breaker may be tripped at any time by making the control switch trip (CS/T) contact.

Note the position switch (PS1) contact in the spring release circuit in the scheme. The contact remains made while the circuit breaker is being levered between the TEST and CONNECTED positions. Consequently, it prevents the circuit breaker from closing automatically, even though the control close contact (CS/C) may have.

Instruction Booklet IB131029EN
Effective March 2022

Instructions for installation, operation, and maintenance of type VCP-W vacuum circuit breakers

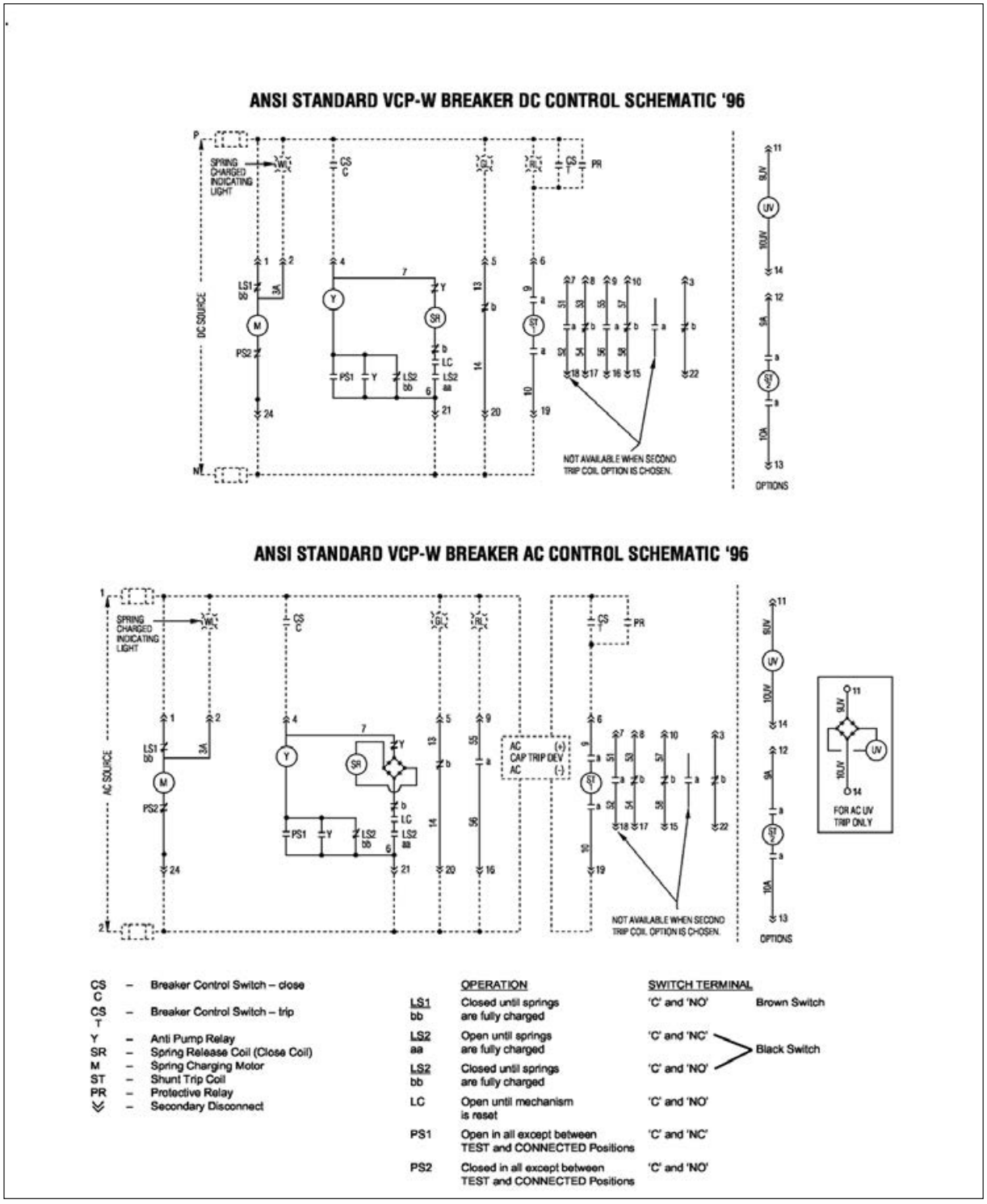

Figure 23. Typical VCP-W DC and AC control schemes. (Dashed lines represent customer wiring and components. This is just one of the many wiring methods that can be used to control the breaker.)

Instructions for installation, operation,
and maintenance of type
VCP-W vacuum circuit breakers

Instruction Booklet IB131029EN
Effective March 2022

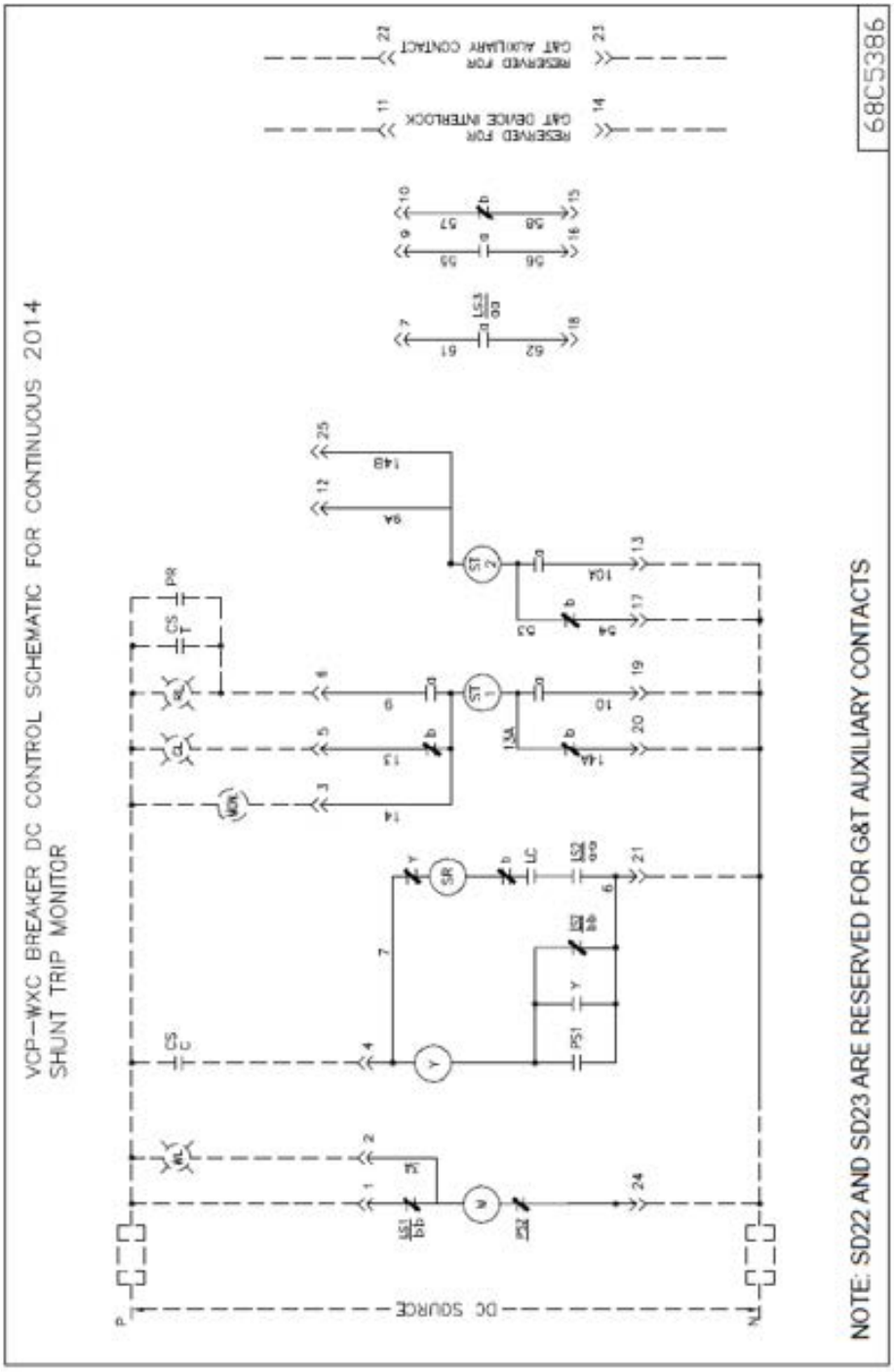

Figure 24. 15 kV VCP-WXC 63 kA 1200-3000 A special power plant breakers, styles: 4A35390G10, 4A35391G10, 4A35392G10 - DC control scheme and diagram. (Dashed lines represent customer wiring and components.)

Note: This differs from the standard VCP-W breaker with the addition of a third motor-cut-off switch and other wiring changes.

Instruction Booklet IB131029EN
Effective March 2022

Instructions for installation, operation, and maintenance of type VCP-W vacuum circuit breakers

⚠ WARNING

15 KV VCP-WXC 63 KA 1200-3000 A SPECIAL POWER PLANT BREAKERS STYLES: 4A35390G10, 4A35391G10, 4A35392G10 CIRCUIT BREAKERS ARE CONFIGURED FOR POWER PLANT SPECIFIC APPLICATIONS ONLY. POTENTIALLY SEVERE UNINTENDED CONSEQUENCES COULD RESULT IF THESE DEVICES ARE MISAPPLIED. PLEASE CONSULT AN EATON APPLICA TION ENGINEER FOR ANY QUESTIONS BEFORE USE OF THESE PRODUCTS.

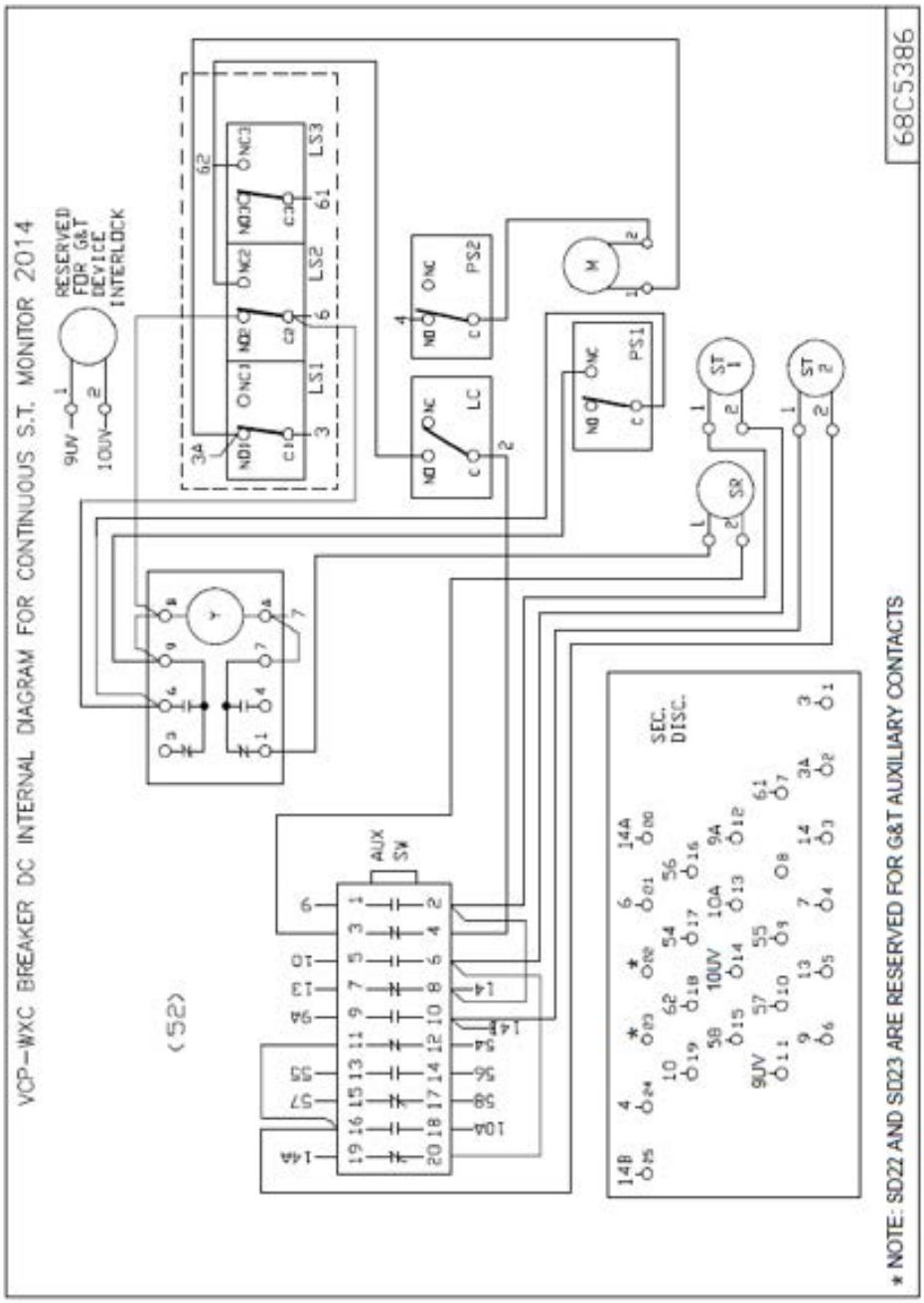

Figure 25 3 - 5 kV VCP-WXC 63 kA 1200-3000 A special power plant breakers, styles: 4A35390G10, 4A35391G10, 4A35392G10 - DC control scheme and diagram (continued from previous page).

When the CS/C contact is made, the SR closes the circuit breaker. If the CS/C contact is maintained after the circuit breaker closes, the Y relay is picked up. The Y/a contact seals in Y until CS/C is opened. The Y/b contact opens the SR circuit, so that even though the circuit breaker would subsequently open, it could not be reclosed before CS/C was released and remade. This is the anti-pump function.

5.4.1 Timing

The opening and closing times for the circuit breakers vary depending upon the control voltage and the power rating. Typical values for VCP-W breaker elements are shown in Table 30.

Table 29. Circuit breaker timing (made while the circuit breaker is levered to the CONNECTED position).

Event	Milliseconds (maximum)
Closing time (From Initiation of close signal to contact make)	45-60
Opening time (Initiation of trip signal to contact break)	30-45
Reclosing time (Initiation of trip signal to contact make)	140-165

5.4.2 Secondary disconnects

The circuit breaker control wiring is arranged to connect a standard 25 point male plug with a corresponding switchgear compartment mounted female plug. The circuit breaker plug is fixed mounted on the left side under the bottom pan of the mechanism (Figure 14). The female plug is mounted in the compartment on a movable carriage (Figure 12).

To engage secondary contacts:

- **For BPI:** secondary contacts engage automatically in TEST position
- **For non-BPI:** raise the handle and pull the carriage all the way towards the front (Figure 15).
- **For automatic/manual hybrid:** raise the handle, spring pressure will force the carriage all the way towards the front. Check contacts fully engaged.

To disengage secondary contacts:

- **For BPI:** rack the breaker to the DISCONNECT position.
- **For non-BPI:** push the carriage to the rear, contacts will disengage.
- **For automatic/manual hybrid:** push the carriage to the rear against spring pressure, contacts will disengage. Allow carriage handle to catch in latch cutout of mechanism.

5.4.3 Shunt trip device

The shunt trip device is an electro-mechanical device that operates to open the circuit breaker. When the coil is energized by some external source, it will trip the breaker open. The shunt trip device is available with rated voltages of 24 Vdc, 48 Vdc, 125 Vdc, 250 Vdc, 120 Vac, and 240 Vac. A cap trip device must be used with the 120 Vac and 240 Vac options. If needed, continuous trip coil monitoring is available. Also there is an option to have a second shunt trip which can be rated at a different voltage other than the voltage specified for the primary shunt trip.

5.4.4 Under-voltage trip device

The under-voltage trip device for VCP-W circuit breakers is an electro-mechanical device that operates to open the circuit breaker at 30% or less of the voltage rating of the trip coil. The device does not open the circuit breaker at values above 60% of the voltage rating of its trip coil. It may operate, however, to open the circuit breaker when the voltage across the trip coil is greater than 30%, but less than 60% of the voltage rating of its trip coil. The circuit breaker can be closed as long as the voltage to the trip coil is maintained at 85% or above the rated level. The under-voltage trip device is available only as an instantaneous type with rated voltages of 48 Vdc, 125 Vdc, 250 Vdc, 120 Vac, and 240 Vac.

For a basic understanding of the operation of the under-voltage trip device refer to the specific items identified in Figure 23 and the following operation description.

1. With the circuit breaker closed and sufficient voltage on the under-voltage trip device coil, the moving clapper (1) is held to the stationary yoke (2) by the magnetic force produced by the coil (3) against the extension springs (4) pulling the moving clapper apart from the yoke.
2. The moving clapper is connected to the mechanism trip "D" shaft lever (5) by a slotted link (6).
3. When the voltage to the under-voltage trip coil goes down as described earlier, the extension springs force overcomes the reduced magnetic force and pulls the moving clapper up. The slotted link in turn upsets the trip "D" shaft and the circuit breaker trips open.
4. As the circuit breaker opens, the reset lever (8) connected to the pole shaft lever (7) operates to reset the moving clapper. As long as the circuit breaker remains open, the reset lever holds down the moving clapper to the yoke.
5. When the circuit breaker closes, the reset lever moves away from the moving clapper. If the under-voltage trip device coil has at least 85% of the rated voltage applied, the moving clapper is held to the yoke by the magnetic force, even though the reset lever has moved up.

Instruction Booklet IB131029EN
Effective March 2022

Instructions for installation, operation, and maintenance of type VCP-W vacuum circuit breakers

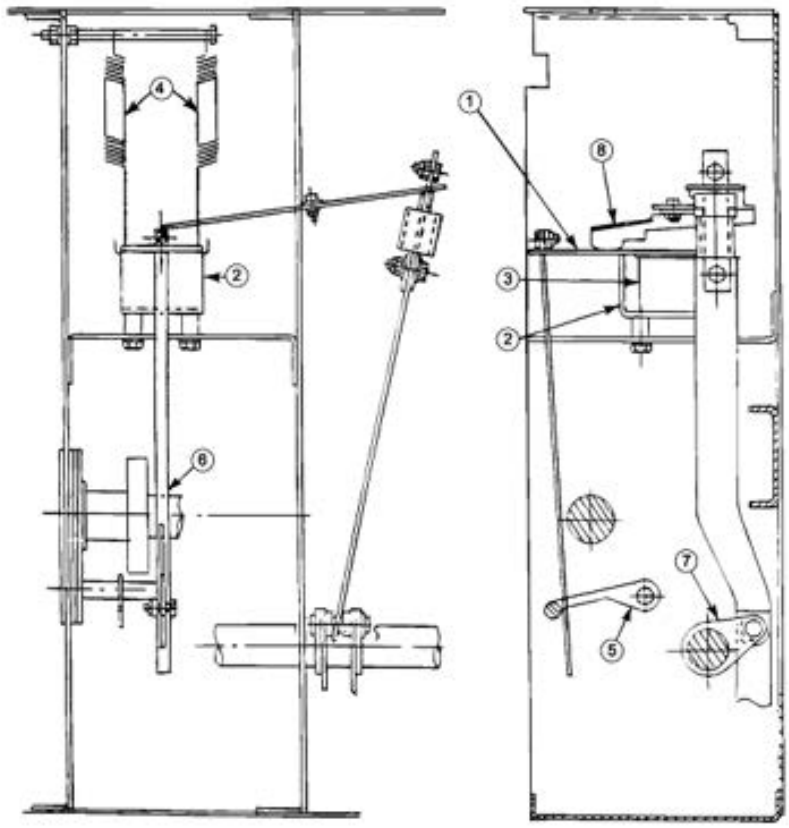

1. Moving clapper
2. Stationary yoke
3. UV trip device coil
4. Extension springs
5. Trip D shaft lever
6. Slotted link
7. Pole shaft lever
8. Reset lever

Figure 25. 15 kV under-voltage trip device configuration.

5.5 Interlocks and interfacing

Refer to Paragraph 4.9 of this manual for detailed information concerning circuit breaker interlocks and their interfacing with a switchgear structure compartment. In addition, refer to the instruction manual supplied with the switchgear assembly.

5.6 Levering mechanism

BPI pan assembly: (Figure 12)

The purpose of the levering device is to move the circuit breaker between the DISCONNECT, TEST, and CONNECTED positions. For Type VCP-W circuit breakers, the device is a racking screw, racking nut, and moving block.

Although the device is mounted in the switchgear compartment, a brief description here will help understand the operation (Figures 13 and 17). For additional information on the insertion and removal of a circuit breaker from its compartment, refer to paragraph 4.8.1 in this manual.

The levering device consists of a racking screw, a racking nut, moving block, two side rails, and a slider. In the DISCONNECT position, the moving block is all the way to the front of the racking screw. As the circuit breaker is pushed into the breaker cell, the levering latch snaps on the moving block. In this position the front cover of the breaker will be aligned with the black line associated with the green area of the label. In order to turn the racking nut, push on the slider with the levering-in crank until fully engaged. Turning the levering-in crank clockwise while still pushing forward on the slider advances the circuit breaker toward the TEST (approximately six full turns) position. In this position, the front cover of the breaker will be aligned with the black line associated with the yellow area of the label. During this travel, the trip floor tripper is lifted up holding the circuit breaker trip free. When the circuit breaker reaches the TEST position, the breaker can be closed. Turning the levering-in crank clockwise while pushing forward advances the circuit breaker toward the CONNECT position.

Rotate the levering-in crank in a clockwise direction until the torque limiter on the levering-in crank "breaks free." As a position verification:

- **BPI pan assembly:** the breaker cover plate MUST align with the black line associated with the CONNECTED position, location shown on the BPI label (Figure 12, item 7).

If the circuit breaker is closed in the CONNECTED position, the slider can be pushed forward to permit engagement of the levering-in crank which will trip the breaker by pushing up on the trip floor tripper. This functionality is enabled by the "L" shaped slider interlock.

The breaker can be moved to the TEST position by pushing forward on the levering-in crank and turning the racking screw counterclockwise until the breaker reaches the TEST position.

The breaker can be moved to the DISCONNECT position by pushing forward on the levering-in crank and turning the racking screw counterclockwise until the breaker reaches the DISCONNECT position (approximately six full turns).

The circuit breaker levering latch can be disengaged only when the circuit breaker is in the DISCONNECT position by lifting the lift/pull handle. As the circuit breaker is withdrawn, it comes out with the contacts open and the springs discharged because of the close floor tripper and trip floor tripper interlocks.

Non-BPI pan assembly: (Figure 14)

The purpose of the levering device is to move the circuit breaker between the TEST and CONNECTED positions. For Type VCP-W circuit breakers, the device is a racking screw, racking nut, and moving block.

Although the device is mounted in the switchgear compartment, a brief description here will help understand the operation (Figures 14 and 16). For additional information on the insertion and removal of a circuit breaker from its compartment, refer to paragraph 4.8.1 in this manual.

The levering device consists of a racking screw, a racking nut, moving block, two side rails, and a slider. In the TEST position, the moving block is all the way to the front of the racking screw. As the circuit breaker is pushed into the breaker cell, the levering latch snaps on the moving block. In order to turn the racking nut, push on the slider with the levering-in crank until fully engaged. Turning the levering-in crank clockwise while still pushing forward on the slider advances the circuit breaker toward the CONNECTED position. During this travel, the Trip Floor Tripper is lifted up holding the circuit breaker trip free. When the circuit breaker reaches the CONNECTED position, the levering-in crank will "spin-free" and cannot advance the breaker any further. A red flag indicates that the circuit breaker is fully engaged.

If the circuit breaker is closed in the CONNECTED position, the slider cannot be pushed forward to permit engagement of the levering-in crank due to the "Z" shaped slider interlock.

After tripping the circuit breaker, push on the slider with the levering-in crank until fully engaged. Turning the levering-in crank clockwise while still pushing forward on the slider advances the circuit breaker toward the DISCONNECT position. This position is indicated by no further motion of the crank and by the green flag indicating that the circuit breaker has reached the TEST position

Automatic/manual hybrid secondary (optional - Figure 45): It will function the same as the Non-BPI pan assembly above due to the replacement of the "L" bracket with the "Z" bracket.

5.7 Operations counter

All circuit breakers are equipped with a mechanical operations counter. As the circuit breaker opens, the linkage connected to the pole shaft lever advances the counter reading by one (Figure 5).

5.8 Ground contact

The ground contact is an assembly of spring loaded fingers providing a disconnectable means for grounding the circuit breaker chassis, after it has been inserted into a switchgear structure. The ground contact is located on the left side of the circuit breaker under the mechanism bottom pan. An extension of the switchgear ground bus is secured to the cell floor in such a position to engage the ground contact automatically, when the circuit breaker is moved into the DISCONNECT or DISCONNECT / TEST position. It remains engaged in all other circuit breaker positions within the cell (Figures 13, 14, and 16).

5.9 MOC and TOC switch operations

The mechanism operated cell (MOC) switch operator is coupled to the pole shaft (Figure 14). In the TEST and CONNECTED positions of the circuit breaker, the operator aligns directly above the MOC switch bell crank levers in the cell. As the circuit breaker closes, the operator moves down and pushes the bell crank lever to change the MOC switch contact position. Thus, the MOC switch contacts operate in the same manner as the auxiliary switch contacts in the circuit breaker. Although the MOC switch operator is provided on all circuit breakers, the cell mounted MOC switches are only provided when specified with the switchgear order. The standard electrical connector for the control wires is a plug on style connector. Optional ring tongue lug connectors can be provided.

The truck operated cell (TOC) switch operator is mounted inside the right corner of the circuit breaker cell (Figure 14). It operates the TOC switch as the circuit breaker moves to the CONNECTED position in the switchgear cell.

Instruction Booklet IB131029EN
Effective March 2022

6. Inspection, maintenance, and trouble-shooting

6.1 Introduction

⚠ WARNING

- **DO NOT WORK ON A BREAKER ELEMENT WITH PRIMARY POWER APPLIED.**
- **DO NOT WORK ON A BREAKER ELEMENT WITH SECONDARY CONTACTS CONNECTED.**
- **DO NOT WORK ON A BREAKER ELEMENT WITH SPRINGS CHARGED OR CONTACTS CLOSED.**
- **DO NOT DEFEAT ANY SAFETY INTERLOCKS.**
- **DO NOT LEAVE MAINTENANCE TOOL IN THE SOCKET AFTER CHARGING THE CLOSING SPRINGS.**
- **DO NOT STAND LESS THAN ONE METER AWAY FROM THE BREAKER ELEMENT WHEN TESTING FOR VACUUM INTEGRITY.**

FAILURE TO FOLLOW ANY OF THESE INSTRUCTIONS MAY CAUSE DEATH, SERIOUS BODILY INJURY, OR PROPERTY DAMAGE. SEE SECTION 2 - SAFE PRACTICES - FOR MORE INFORMATION.

6.2 Frequency of inspection and maintenance

Periodic inspections and associated maintenance are essential to the safe and reliable operation of VCP-W vacuum circuit breaker elements. The inspection frequency and associated maintenance recommended are intended to insure the best possible ongoing service. It is imperative that an established schedule be followed. To establish an exact schedule for a specific installation, use the following guidelines.

1. Customers such as utilities having extensive experience with power distribution components should schedule their inspection and maintenance intervals using well established best practices in their industry.
2. All other customers should use the following guidelines as good conservative practice:
   a. For installations defined as normal service conditions per IEEE C37.20.2 and considered clean, non-corrosive environments, inspect, and maintain each circuit breaker every 500 operations or 10 years, whichever comes first. If it is determined after completing the "Inspection and maintenance procedures" in section 6.3 of this manual that the breaker is still like new based on visual inspection and performance, then the next maintenance interval shouldn't exceed 500 operations or 10 years from the date of the inspection.
   b. For special conditions such as frequent circuit breaker element operation, contaminated environments, and high temperature/humidity conditions, the inspection frequency should be a minimum of twice per year.
3. Fault interruptions have the greatest impact on contact erosion inside of the vacuum interrupters. Circuit breakers that have been subjected to 15 full rated fault interruptions should be immediately inspected and the schedule for inspection and maintenance should be re-evaluated based upon the inspection results. Additionally, because of the variability of system fault characteristics, if there are any customer uncertainties in the records of the magnitude, duration, or other fault details, increased inspection frequency should be considered.
4. Follow the steps presented in paragraph 6.3 entitled "Inspection and Maintenance Procedures" for scheduled programs.
5. Create and maintain a dated permanent record of all inspections, maintenance performed, actions taken, observations made, and measurements taken. Not only will this provide valuable historical information, it can help to establish whether or not the present schedule needs to be adjusted.
6. Perform ongoing visual inspections, when possible, of all equipment on a regular basis. Be alert for an accumulation of dirt in and around the circuit breaker elements, loose hardware or discolored insulation.

For assistance in establishing or updating a detailed inspection and maintenance schedule for a specific application, please contact your local Eaton representative.

Eaton's vacuum interrupters are tested to exceed the minimum fault interruptions as required by IEEE/ANSI and IEC Standards without inspection. Please contact your local Eaton representative if you would like a copy of the life curve of the vacuum interrupters in your specific circuit breakers.

In addition to the instructions in this instruction book, Eaton has created a visual tool to assist maintenance personnel. Contact Eaton for the **Visual Instruction Booklet Essentials (VIBE)** which is an interactive PDF with embedded videos to show how to perform many common types of field testing and part replacements.

6.2.1 Qualified personnel

For the purpose of operating this type of equipment, only individuals thoroughly trained in the operation of power circuit breakers and associated equipment, and having knowledge of connected loads may be considered to be qualified.

Refer to further definitions in the National Electrical Safety Code.

For the purpose of inspecting and maintaining such equipment, a qualified person must also be trained in regard to the hazards inherent to working with electricity and the proper way to perform such work. Such an individual should be able to de-energize, clear, and tag circuits in accordance with established safety practices. In addition, these individuals should have access to and be trained in the use of protective equipment, such as rubber gloves and flash clothes.

All personnel should be familiar with and understand the material presented in this instruction manual and other related manuals.

6.2.2 General torque guidelines

Bolts and screws must be properly torqued. This is especially true if part(s) and/or accessory(ies) are added or replaced. Table 31 provides guidelines on torque levels. The table is intended as a general guideline and should be applied in conjunction with the experience and good judgment of the individual performing the work.

⚠ CAUTION

OVER TORQUING CAN CAUSE PERMANENT DAMAGE WHILE UNDER TORQUING WILL NOT PROVIDE THE PROPER CLAMPING FORCE AND MAY EVENTUALLY WORK LOOSE.

Table 30. Torque guidelines.

Bolt size	Torque lb-in (lb-ft)
8 - 32	24
10 - 32	36
1/4 - 20	72 (6 lb-ft)
5/16 - 18	144 (12 lb-ft)
3/8 - 16	300 (25 lb-ft)
1/2 - 13	540 (45 lb-ft)

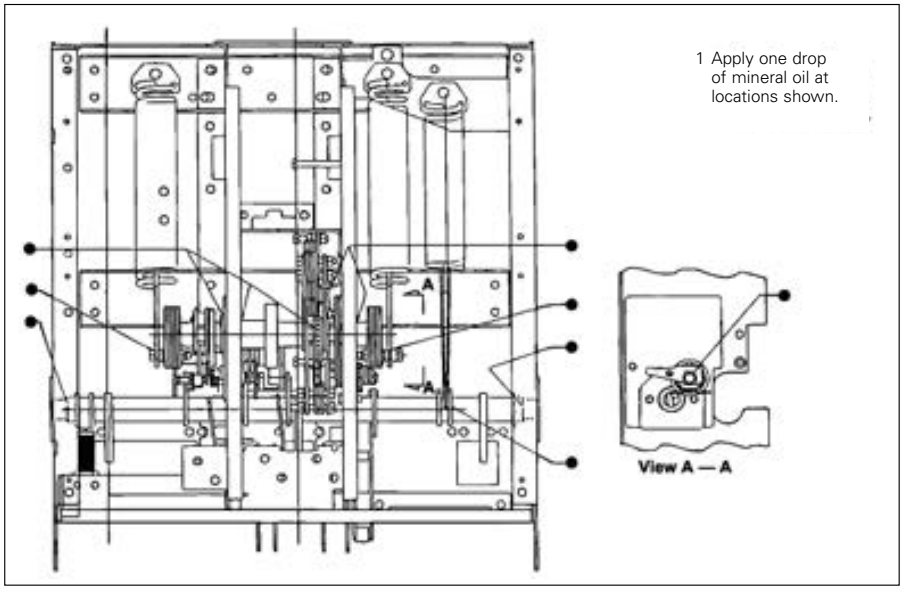

Figure 26. Lubrication points.

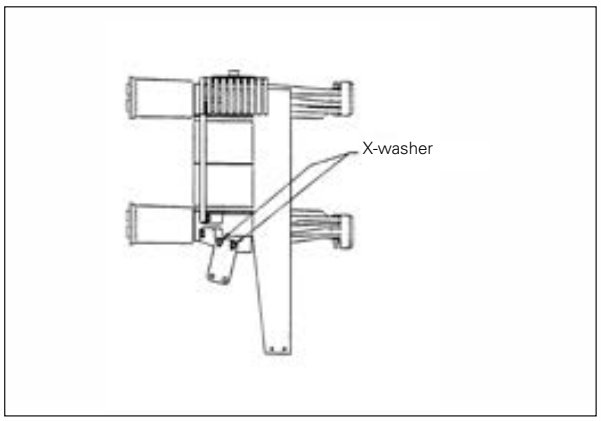

Figure 27. 50 VCP-W 63 - 63 kA pole unit.

6.3 Inspection and maintenance procedures

No./section	Inspection item	Criteria	Inspection method	Corrective action
1.Insulation	Drive insulator, barriers, and stand-off insulators	No dirt and No cracking	Visual check Visual check	Clean with lint-free cloth or replace cracked piece.
Insulation integrity	Main circuit to ground	Withstand	Hipot tester	Clean and retest or replace .
	Between main circuit terminals	Withstand	Hipot tester	Clean and retest or replace.
	Control circuit to ground	Withstand	Hipot tester	Clean and retest or replace.
2. Power elements	Vacuum interrupters	Visibility of contact erosion marks	Visual - Close the circuit breaker and observe if all black, blue or machined groove marks on moving stems are visible	If a mark is not visible, then check if the pole unit plastic bushing is intact on the moving stem of the VI just below the cup plate. If the bushing is intact, then replace the interrupter assembly and perform contact wipe check. If the bushing is NOT intact, then glue back the bushing to the cup plate and observe the mark again.
		Contact wipe indicator visible	Refer to paragraph 6.5	Replace interrupter assembly.
		Adequate vacuum	Proceed with integrity check as described in Paragraph 6.4	If integrity check is not satisfactory, replace interrupter assembly.
	Primary disconnects	Dirt on ceramic body	Visual check	Clean with lint-free cloth.
		No burning or damage	Visual check	Replace if burned, damaged or eroded.
	Pole unit X-washers for 150 VCP-W 63	Every 1000 operations	Operation counter	Replace all X-washers per Figure 25.
3. Control circuit parts	Closing and tripping device including disconnects	Smooth and correct operation by control power	Test closing and tripping of the circuit breaker twice	Replace any defective device. Identify per trouble-shooting chart .
	Wiring	Securely tied in proper place	Visual check	Repair or tie as necessary.
	Terminals	Tight	Visual check	Tighten or replace if necessary.
	Motor	Smooth, normal operation	Functional test	Replace brushes or motor.
4. Operating mechanism	Tightness of hardware	No loose or missing parts	Visual and by feel	Refer to Table 31 and tighten or reinstate if necessary with appropriate tools.
	Dust or foreign matter	No dust or foreign matter	Visual check	Clean as necessary.
	Lubrication	Smooth operation and no excessive wear	Sight, feel and per maintenance schedule	Refer to Figure 24 and paragraph 6.10 and lubricate very sparingly with mineral oil.
	Deformation or excessive wear	No excessive deformation or wear	Visual and operational	Remove cause and replace parts.
	Manual operation	Smooth operation	Manual charging, closing and tripping	Correct per troubleshooting chart if necessary.
	CloSure test	0.6 inch over-travel	CloSure Test (6.9.1)	If < 0.6, contact your local Eaton Sales and Service Center.

6.4 Vacuum interrupter integrity test

Vacuum interrupters used in Type VCP-W vacuum circuit breaker elements are highly reliable interrupting elements. Satisfactory performance of these devices is dependent upon the integrity of the vacuum in the interrupter and the internal dielectric strength. Both of these parameters can be readily checked by a one minute AC high potential test. Refer to Table 31 for the appropriate test voltage. During this test, the following warning must be observed.

⚠ WARNING

APPLYING ABNORMALLY HIGH VOLTAGE ACROSS A PAIR OF CONTACTS IN VACUUM MAY PRODUCE X-RADIATION. THE RADIATION MAY INCREASE WITH THE INCREASE IN VOLTAGE AND/OR DECREASE IN CONTACT SPACING. X-RADIATION PRODUCED DURING THIS TEST WITH RECOMMENDED VOLTAGE AND NORMAL CONTACT SPACING IS EXTREMELY LOW AND WELL BELOW MAXIMUM PERMITTED BY STANDARDS. HOWEVER, AS A PRECAUTIONARY MEASURE AGAINST POSSIBILITY OF APPLICATION OF HIGHER THAN RECOMMENDED VOLTAGE AND/OR BELOW NORMAL CONTACT SPACING, IT IS RECOMMENDED THAT ALL OPERATING PERSONNEL STAND AT LEAST 13 FEET (4 METERS) AWAY IN FRONT OF THE BREAKER ELEMENT.

With the breaker element open, connect all top primary studs (bars) together and to the high potential machine lead. Connect all bottom studs together and ground them along with the breaker frame. Start the machine at zero potential, increase to appropriate test voltage and maintain for one minute.

A successful withstand indicates that all interrupters have a satisfactory vacuum level. If there is a break-down, the defective interrupter or interrupters should be identified by an individual test and replaced before placing the breaker in service.

⚠ WARNING

AFTER THE HIGH POTENTIAL IS REMOVED, AN ELECTRICAL CHARGE MAY BE RETAINED BY THE VACUUM INTERRUPTERS. FAILURE TO DISCHARGE THIS RESIDUAL ELECTROSTATIC CHARGE COULD RESULT IN AN ELECTRICAL SHOCK. ALL SIX PRIMARY TERMINALS AND THE CENTER RING OF EACH VACUUM INTERRUPTER OF THE CIRCUIT BREAKER SHOULD BE GROUNDED TO REDUCE THIS ELECTRICAL CHARGE BEFORE COMING IN CONTACT WITH THE PRIMARY CIRCUIT.

To avoid any ambiguity in the AC high potential test due to leakage or displacement (capacitive) current, the test unit should have sufficient volt-ampere capacity. It is recommended that the equipment be capable of delivering 25 milliamperes for one minute.

ONLY AC HIGH POTENTIAL TESTS ARE RECOMMENDED.

EATON DOES NOT RECOMMEND DC POWER FREQUENCY WITHSTAND VOLTAGE TEST.

Table 31. Test voltage (insulation and vacuum integrity).

Breaker rated maximum voltage	Vacuum interrupter integrity test voltage AC 60 Hz
Up to and including 5 kV	15 kV
7.5 kV - 17.5 kV	27 kV
24 kV and 27 kV	45 kV

The current delivery capability of 25 mA AC and 5 mA DC apply when all three vacuum interrupters are tested in parallel. If individual vacuum interrupters are tested, current capability may be one third of these values.

⚠ CAUTION

SOME DC HIGH POTENTIAL UNITS, OPERATING AS UNFILTERED HALF-WAVE RECTIFIERS, ARE NOT SUITABLE FOR USE TO TEST VACUUM INTERRUPTERS BECAUSE THE PEAK VOLTAGE APPEARING ACROSS THE INTERRUPTERS CAN BE SUBSTANTIALLY GREATER THAN THE VALUE READ ON THE METER.

6.5 Contact erosion and wipe

Since the contacts are contained inside the interrupter, they remain clean and require no maintenance. However, during high current interruptions there may be a minimum amount of erosion from the contact surfaces. Maximum permitted erosion is about 1/8 in. (3.18 mm). To determine contact erosion, close the breaker and observe the vacuum interrupter moving stem from the rear of the breaker. If the mark on each stem is visible, erosion has not reached maximum value thus indicating satisfactory contact surface of the interrupter (see Figure 29). If the mark is not visible, either the vacuum interrupter assembly or the pole unit assembly must be replaced.

The adequacy of contact wipe can be determined by observing the vacuum interrupter side of the operating drive rod assembly on a closed circuit breaker. Figure 30 shows the procedure for determining the contact wipe. If the wipe is not adequate, the vacuum interrupter assembly or pole unit assembly must be replaced. A field adjustment is not possible. Refer to IL131030EN for the pole unit replacement procedure.

⚠ WARNING

FAILURE TO REPLACE A POLE UNIT ASSEMBLY, WHEN CONTACT EROSION MARK IS NOT VISIBLE OR WIPE IS UNSATISFACTORY, WILL CAUSE THE BREAKER TO FAIL TO INTERRUPT AND THEREBY CAUSE PROPERTY DAMAGE OR PERSONAL INJURY.

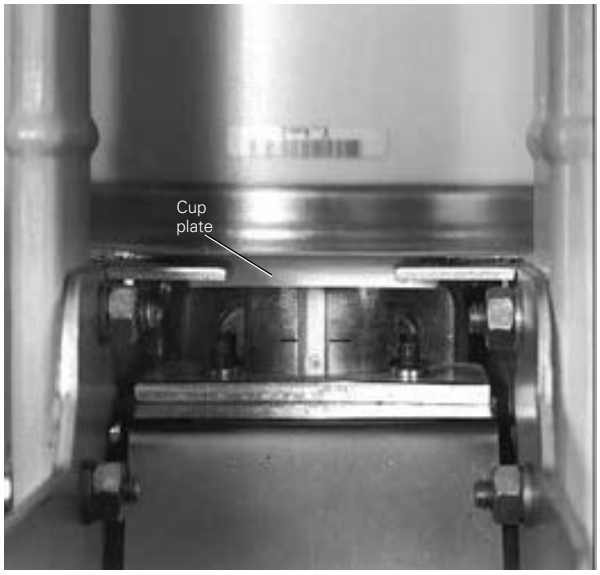

Figure 28. Vacuum interrupter showing contact erosion indicator with breaker open (shown here for clarity purposes only).

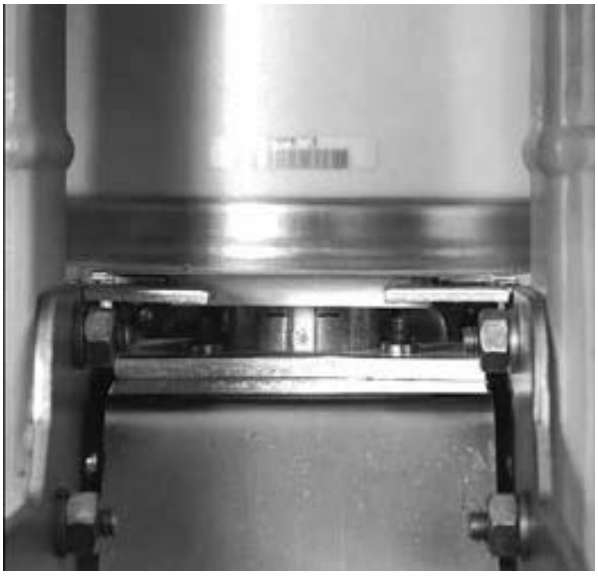

Figure 29. Vacuum interrupter showing contact erosion indicator with breaker closed (indicators are checked only when the breaker is closed).

Instructions for installation, operation,
and maintenance of type
VCP-W vacuum circuit breakers

Instruction Booklet IB131029EN
Effective March 2022

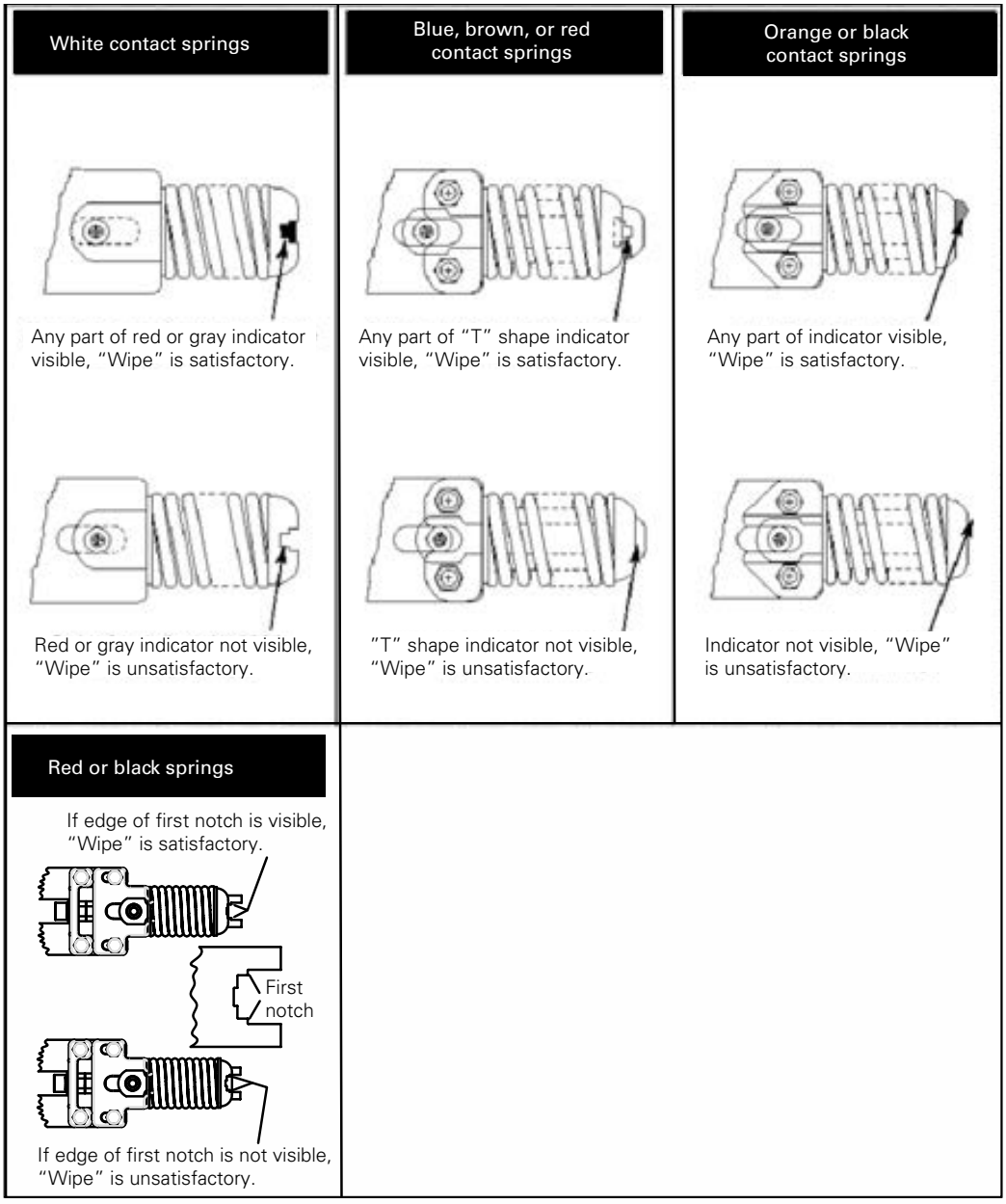

Figure 30. Wipe indication procedure (performed only with the breaker closed).

Instruction Booklet IB131029EN
Effective March 2022

6.6 Insulation

Type VCP-W circuit breaker insulation maintenance primarily consists of keeping all insulating surfaces clean. This can be done by wiping off all insulating surfaces with a dry lint free cloth or dry paper towel. In case there is any tightly adhering dirt that will not come off by wiping, it can be removed with mild solvent or distilled water. Be sure that the surfaces are dry before placing the circuit breaker in service. If a solvent is required to cut dirt, use Stoddard's Solvent Eaton 55812CA or commercial equivalent. Secondary control wiring also requires inspection for insulation damage.

6.7 Insulation integrity check

Primary circuit:

The integrity of primary insulation may be checked by the 60 Hz AC high potential test. The test voltage depends upon the maximum rated voltage of the breaker. For the breaker elements rated 4.76 kV, 8.25 kV, 15 kV, and 27 kV, the test voltages are 15 kV, 27 kV, 27 kV, and 45 kV RMS respectively. Conduct the test as follows.

Close the breaker. Connect the high potential lead of the test machine to one of the poles of the breaker. Connect the remaining poles and breaker frame to ground. Start the machine with output potential at zero and increase to the test voltage. Maintain the test volt-age for one minute. Repeat for the remaining poles. Successful withstand indicates satisfactory insulation strength of the primary circuit.

If a DC high potential machine is used, make certain that the peak voltage does not exceed the peak of the corresponding AC RMS test voltage.

Secondary circuit:

Isolate the motor by pulling apart the two insulated quick discon-necting terminals in the two motor leads provided for this purpose, or remove the two motor wires from the ring tongue terminals (Figure 5). Connect all points of the secondary disconnect pins with shooting wire. Connect this wire to the high potential lead of the test machine. Ground the circuit breaker frame. Starting with zero, increase the voltage to 1125 Vac RMS, 60 Hz. Maintain the voltage for one minute. Successful withstand indicates satisfactory insula-tion strength of the secondary control circuit. Remove the shooting wire and reconnect motor leads.

6.8 Primary circuit resistance check

Since the main contacts are inside the vacuum chamber, they remain clean and require no maintenance at any time. Unlike many typical circuit breaker designs, VCP-W breakers do not have sliding contacts at the moving stem either. Instead they use a highly reli-able and unique flexible clamp design that eliminates the need for lubrication and inspection for wear.

If desired, the DC resistance of the primary circuit may be measured as follows:

- Close the circuit breaker, pass at least 100 amps DC current through the circuit breaker. With a low resistance instrument, measure resistance across the studs on the circuit breaker side of the disconnects for each pole.

The resistance should not exceed the values shown in Table 33.

Table 32. Typical resistance measurements.

Rated continuous current (amperes)	Resistance (microohms)
1200	60
2000	40
3000	35

6.9 Mechanism check

Make a careful visual inspection of the mechanism for any loose parts such as bolts, nuts, pins, and rings. Check for excessive wear or damage to the circuit breaker components. Operate the circuit breaker several times manually and electrically. Check the closing and opening times to verify that they are in accordance with the limits in Table 30.

6.9.1 CloSure™ test

Introduction

The CloSure test is a simple yet extremely effective means to deter-mine and monitor the ability of the mechanism to close the breaker contacts fully. It provides a quantitative measure of the extra energy available in terms of over travel in inches to close the breaker contacts to their full extent. It maybe used periodically to monitor the health of the mechanism.

At times, circuit breakers are called upon to operate mechanism operated cell (MOC) switches that place extra load upon the closing mechanism of the circuit breaker. If this load is excessive, it can prevent the circuit breaker from closing fully. In such a case, it is important to determine that the circuit breaker will close fully. The CloSure test provides this assurance.

General information

The CloSure test can be per-formed on the VCP-W, VCP-WR, VCPW-ND, DHP-VR, W-VACR, and W-VAC lines of vacuum circuit breakers. Refer to Table 34 a for list of circuit breakers. If the CloSure travel obtained is as specified, the mechanism performance is satisfactory. If the CloSure travel does not conform as shown in Figure 35, con-tact Eaton for further information (see Step 13).

⚠ WARNING

DO NOT ATTEMPT TO INSTALL OR PERFORM MAINTENANCE OR TESTS ON THE EQUIPMENT WHILE IT IS ENERGIZED. NEVER PUT YOUR HANDS NEAR THE MECHANISM WHEN THE CIRCUIT BREAKER IS IN THE CHARGED OR CLOSED POSITION. DEATH OR SEVERE PERSONAL INJURY CAN RESULT FROM CONTACT WITH ENERGIZED EQUIPMENT. ALWAYS VERIFY THAT NO VOLTAGE IS PRESENT BEFORE PROCEEDING WITH THE TASK AND ALWAYS FOLLOW GENERALLY ACCEPTED SAFETY PROCEDURES.

6.10 Megger and power factor testing

Both the megger and power factor type testing of high voltage insulation are not recognized by IEEE as a design, production, or conformance test for determining product acceptance during initial commissioning. If an end user wishes to use these tests for trend-ing purposes, then they should record the initial readings during commissioning along with temperature and humidity during the testing. The trend of the test results should be tracked over the life of the product and any abnormalities should be investigated.

Safety precautions

Read and understand these instructions before attempting any main-tenance, repair, or testing on the breaker. The user is cautioned to observe all recommendations, warnings, and cautions relating to the safety of personnel and equipment.

The recommendations and information contained herein are based on Eaton experience and judgment, but should not be considered to be all-inclusive or covering every application or circumstance which may arise. If further information is required, you should consult Eaton.

Instructions for installation, operation, and maintenance of type VCP-W vacuum circuit breakers

Instruction Booklet IB131029EN
Effective March 2022

Testing procedures

Assuming that the breaker is safely pulled out to the Test/Disconnect position in the enclosure or placed on the workbench, follow this procedure to perform the CloSure test. For further instructions on disconnecting the circuit breaker consult Section 4 of this manual. If the enclosure is equipped with the MOC operating in the test position also, make certain that the MOC is connected to operate.

1. On the front cover identify the status indicators. **Make sure the closing spring status indicates "Discharged" and the main contact indicator shows "Open"** (Figure 7).
2. Remove the circuit breaker front cover. **Be sure to save the original fasteners for reassembly.**
3. Cut a piece of one-inch (25.4 mm) wide drafting/masking tape approximately 8 to 10 in. (203 to 254 mm) long.

Figure 31. Starting tape at the bottom of the cam.

Figure 32. Wrapping tape up around the cam.

4. Place the tape around the cam starting from the bottom up. Make certain that the tape adheres well to the cam surface (see Figures 31, 32, and 33).

Figure 33. Attaching tape around to the back of the cam.

Figure 34. Attaching CloSure test tool at hole "A".

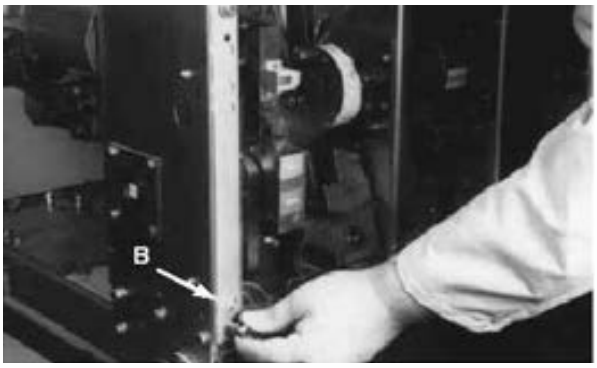

Figure 35. Attaching CloSure test tool at "B".

5. Mount the transparent CloSure test tool with two bolts and washers. Refer to Figures 44, 45, and Table 34 for appropriate mounting holes. Hand tighten the bolts (Figures 34, 35, 44, and 45).

6. A Sanford® Sharpie® black fine point permanent marker, item no. 30001, is recommended for this next step. Place the marker tip in the proper hole ("C"). Refer to Figure 42 and make a heavy mark on the tape as shown in Figure 33.

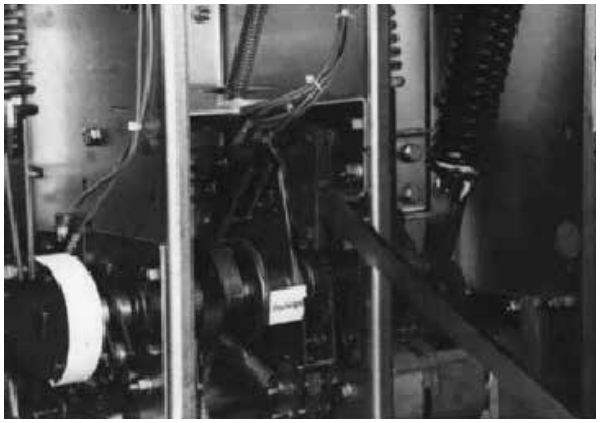

Figure 36. Manually charging the closing springs.

7. Charge the closing springs with the maintenance tool. Continue charging the closing springs until a "click" is heard and the status indicator shows "Charged" (Figure 34).
8. While holding the marker tip on the tape, close the breaker (Figure 35).
9. Move the marker back and forth horizontally approximately 15 degrees in both directions to create a line on the tape that identifies the closed rest position (Figures 38, 44, and 40).

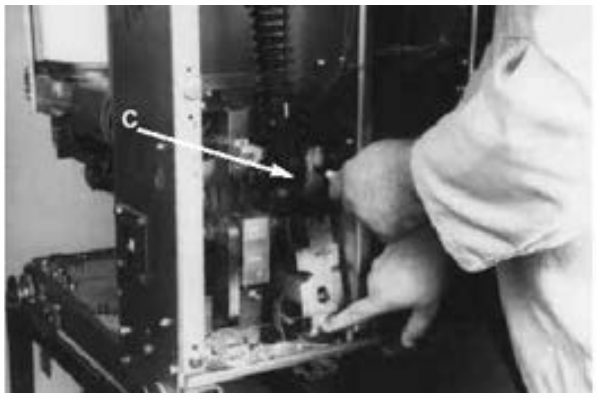

Figure 37. Manually closing the circuit breaker with the marker in hole "C".

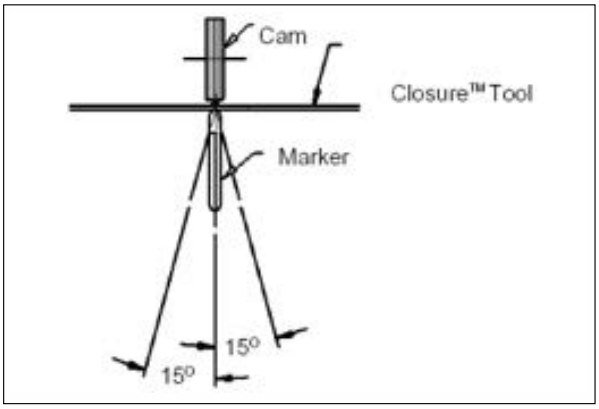

Figure 38. Top view of the cam and marker interface.

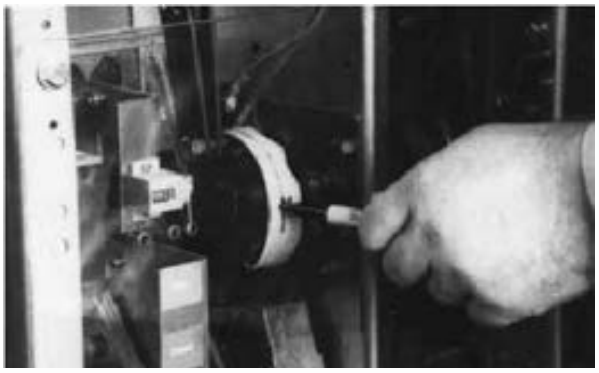

Figure 39. Move marker 15° to the right.

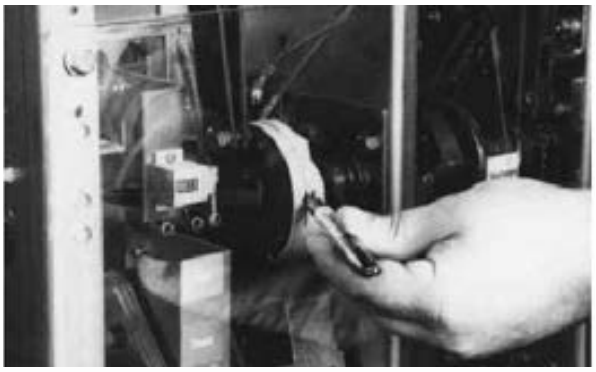

Figure 40. Move marker 15° to the left.

Instructions for installation, operation, and maintenance of type VCP-W vacuum circuit breakers

Instruction Booklet IB131029EN
Effective March 2022

Figure 41. Remove marked masking tape from the cam.

Figure 42. Place the tape on the right side panel of the breaker.

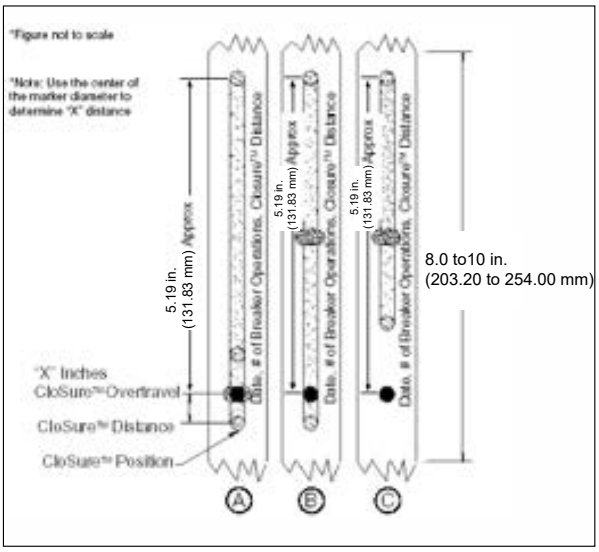

Figure 43. Illustrative testing tape sample.

10. Remove the marker from hole "C".
11. Push the "push to open" clapper to open the circuit breaker.

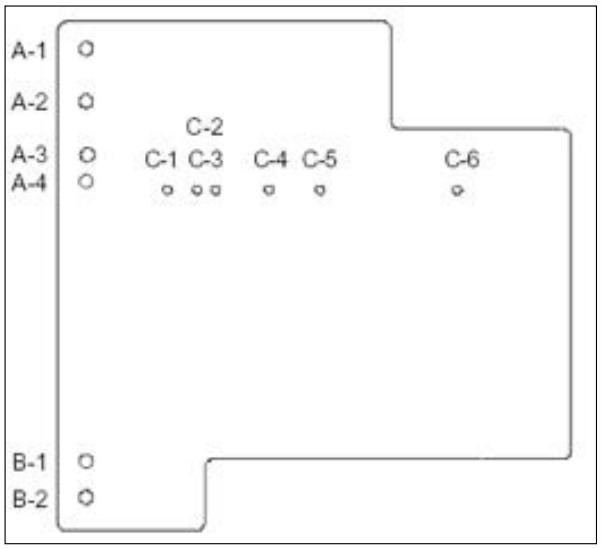

Figure 44. Front view of closure tool showing mounting/testing locations (6352C49H01).

12. Inspect the circuit breaker to assure it is in the open position and the closing springs are discharged. Remove the transparent CloSure tool. Remove the tape from the cam and stick the tape on the front right side sheet of the circuit breaker. Record the date of the test and the operations counter reading on the tape (Figures 41, 42 and 43).

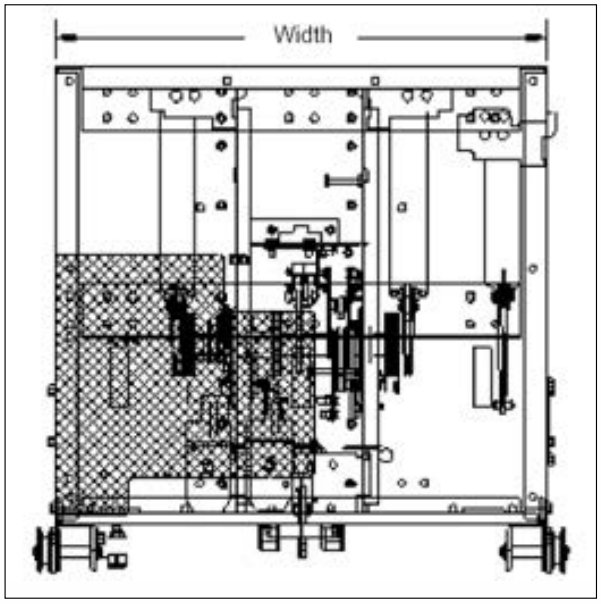

Figure 45. Typical circuit breaker front view with CloSure tool attached (approximate mechanism chassis width).

13. Evaluate the CloSure performance by comparing the test tape with the illustrations in Figure 40. If the marking is similar to 42, detail A, measure the over travel "x". If "x" is greater than or equal to 0.6 in. (15.2 mm), the circuit breaker performance is satisfactory. If "x" is less than 0.6 in. (15.2 mm) or if the marking is similar to 42, detail B or 42, detail C, immediately contact the Product Integrity Center for Technical Support at (412) 787-6518.
14. Remove the CloSure tool. Reassemble the front cover onto the circuit breaker. Return the circuit breaker to its original configuration and setup.

6.11 Mechanism lubrication

For breakers built prior to 01/01/18

All parts that require lubrication have been lubricated during the assembly with molybdenum disulfide grease (Eaton Material No. 53701 QB) which is no longer available. Over a period of time, this lubricant may be pushed out of the way or degrade. Proper lubrication at regular intervals is essential for maintaining the reliable performance of the mechanism. Once a year or every 500 operations whichever comes first, the circuit breaker should be lubricated, as shown in Figure 23, with a drop of mineral oil.

The mineral oil shall be "3-In-One" Multi-Purpose Oil. Fluorosilicone oil is not compatible with Eaton's grease and **shall not** be used in the lubrication of Eaton breakers.

Table 33. Closure tool mounting/testing locations by circuit breaker type.

Breaker line	Approximate mechanism cabinet width (inch)	Upper mounting hole	Lower mounting hole	Marker placement hole
DHP-VR	20 29	A1 A1	B2 B1	C2 C5
VCPW-ND	20/21	A1	B2	C2
VCP-W,	29 33	A1 A2	B2 B2	C5 C6
VCP-WR	18 20 29	A1 A1 A1	B2 B2 B2	C1 C2 C5
W-VAC, W-VACR	18 25 33	A1 A1 A2	B2 B1 B2	C1 C4 C6

After lubrication, operate the circuit breaker several times manually and electrically.

Roller bearings are used on the pole shaft, the cam shaft, the main link, and the motor eccentric. These bearings are packed at the factory with a top grade grease, as specified by code, which normally should be effective for many years. They should not be disturbed unless there is definite evidence of sluggishness, dirt, or parts are dismantled for some reason.

If it becomes necessary to disassemble the mechanism, the bearings and related parts should be thoroughly cleaned. Remove old grease in a good grease solvent. **Do not use carbon tetrachloride.** They should then be washed in light machine oil until the cleaner is removed. After the oil has been drawn off, the bearings should be packed with Eaton's synthetic grease.

Eaton's synthetic grease can be mixed with the molybdenum disulfide grease with no side effects.

For breakers built after 1/1/2018

All parts that require lubrication have been lubricated during the assembly with Eaton's new synthetic grease. Over a period of time, this lubricant may be pushed out of the way or degrade. Proper lubrication at regular intervals is essential for maintaining the reliable performance of the mechanism. Every 500 operations or 10 years whichever comes first, the circuit breaker should be lubricated.

Roller bearings are used on the pole shaft, the cam shaft, the main link, and the motor eccentric. These bearings are packed at the factory with a top grade synthetic grease which will be effective for 10 years. They should not be disturbed.

If it becomes necessary to disassemble the mechanism, the bearings and related parts should be thoroughly cleaned. Remove old grease in a good grease solvent. **Do not use carbon tetrachloride.** They should then be washed in light machine oil until the cleaner is removed. After the oil has been drawn off, the bearings should be packed with Eaton's synthetic grease.

6.12 Finger clusters and switchgear stab lubrication

The breaker finger clusters are shipped with a lubricating blue wax applied from the factory and the switchgear stabs are shipped with a lubricating blue wax applied from the factory. The blue wax is used instead of grease lubrication purposes for the following reasons:

1. The blue wax has a higher melting point and a lower viscosity point then grease. So the blue wax will stay on warm contact surfaces instead of dripping off like some greases.
2. Dust particles are less likely to stick to blue wax as opposed to grease. Dirty grease can be a poor conductor.
3. The blue additive is added by Eaton to provide the ability to perform visual checks of the breaker finger cluster engagement on the switchgear stabs.

The breaker should never be levered into the cell when the blue wax has been removed from the breaker finger clusters or the switchgear stabs.

When routine maintenance is performed on the breaker or switchgear, the blue wax can be reapplied under de-energized conditions. The blue wax can be purchased from Eaton by ordering material code number 83342CE.

6.13 Main contacts to switchgear primary engagement

When the circuit breaker is in the complete and fully connected position, the circuit breaker main contacts should be engaged on the flat portion of the stationary primary contacts and not on the leading radius.

6.14 How to determine the manufacturing date

The date code is located in the serial number - see the example:

Serial no. X X X X X X X XX

The first four characters provide the date information. The first two characters are the year and the next two characters are the month. The last five characters are the production unit identifier.

6.15 Troubleshooting chart

Symptom	Inspection	Probable defects
Fails to close		
• Closing springs not charged	• Control circuit	• Control power (fuse blown or switch off) • Secondary disconnects • Motor cut-off switch (poor or burned contacts, lever not operational) • Terminals and connectors (poor or burned contacts) • Motor (brushes worn or commutator segment open)
	• Mechanism	• Pawls (slipping or broken) • Ratchet wheel (teeth worn or broken) • Cam shaft assembly (sluggish or jammed) • Oscillator (reset spring off or broken)
• Closing spring charged but breaker does not close	• No closing sound (close coil does not pick up)	• Control power (fuse blown or switch off) • Secondary disconnects • Anti-pump relay Y relay N. C. (contact open or burned or relay picks up) • Close coil (open or burned) • Latch check switch (contact open-bad switch or trip bar not reset) • Auxiliary switch (B contact open or burned) • Motor cut-off (contacts open or burned) • Trip coil assembly (clapper fails to reset)
	• Closing sound but no close	• Pole shaft (not open fully) • Trip latch reset spring (damaged or missing) • Trip bar-d shaft (fails to remain reset) • Trip latch-hatchet (fails to remain reset) • Trip floor tripper (fails to remain reset) • Close latch (binding) • Close latch roller (binding) • Trip circuit energized
Undesirably closes		
	• Control circuit	• Close circuit (CS/C getting shorted)
	• Mechanism	• Close release latch (fails to reset) • Close floor tripper (fails to reset)
Fails to trip		
• No trip sound	• Control circuit	• Control power (fuse blown or switch off) • Secondary disconnect • Auxiliary switch (A contact not making, poor or burned) • Trip coil (burned or open) • Terminals and connections (poor or burned or open)
	• Trip mechanism	• Trip clapper (jammed)
• Trip sound but no trip	• Trip mechanism	• Trip bar, trip latch (jammed) • Pole shaft (jammed) • Operating rod assembly (broken or pins out)
	• Vacuum interrupter (one or more welded)	
Undesirably trips		
	• Control circuit	• Control Power (CS/T Switch, remains made)
	• Mechanism	• Trip coil clapper (not resetting) • Trip bar or trip latch (poor engagement of mating or worn surfaces) • Trip bar reset spring (loss of torque)

6.16 End of life procedures

This circuit breaker design does not contain SF_6, asbestos, or other hazardous materials that require special handling. On removal from service, the contacts shall be open and the closing spring discharged. The unit can be discarded/destroyed in a similar manner as the switchgear that it is contained within. The breaker raw materials in general are made from copper, steel, aluminum, and plastic.

6.17 Failure reporting

It is important to learn the field failures. To aid in this process, it is recommended that IEEE Std C37.10 (section A.1) and the reporting form IEEE Std 1325 be considered for reporting the breaker failure event to EATON.

Instruction Booklet IB131029EN
Effective March 2022

7. Renewal parts

7.1 General

In order to minimize production downtime, it is recommended that an adequate quantity of spare parts be carried in stock. The quantity will vary from customer to customer, depending upon the service severity and continuity requirements. Each customer should develop their own stock level based on operating experience. Refer to Tables 35 and 36 for guidance.

7.1.1 Ordering instructions

1. Always specify the breaker rating information and shop order number.
2. Describe the item, give the style number, and specify the quantity required.
3. Provide the style number from the interrupter assembly.
4. Specify the voltage for electrical components.
5. Specify the method of shipping desired.
6. Send all orders or correspondence to the nearest Eaton sales office.

Table 34. Recommended replacement parts for ANSI type VCP-W k=1 rated breakers (see Table 39 for common items not listed here) (continued next page).

Line no.	Description	Style number VCP-W K=1	Qty. per breaker	Typical view
	Pole Unit Assembly			
1 2	5/25, 1200 A 5/25 SE 1200 A	81A7040G01 81A7041G01	3	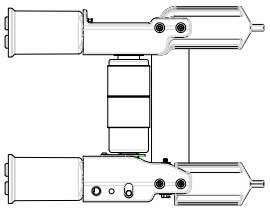 25/32/40 kA 1200/2000 A
3 4	5/25, 2000 A 5/25 SE 2000 A	81A7040G02 81A7041G02	3	
5 6	5/25, 3000 A 5/25 SE, 3000 A	81A7040G03 81A7041G03	3	
7 8	5/32, 1200 A 5/32 SE, 1200 A	81A7040G04 81A7041G04	3	
9 10	5/32, 2000 A 5/32 SE, 2000 A	81A7040G05 81A7041G05	3	
11 12	5/32, 3000 A 5/32 SE, 3000 A	81A7040G06 81A7041G06	3	
13 14	5/40, 1200 A 5/40 SE, 1200 A	81A7040G07 81A7041G07	3	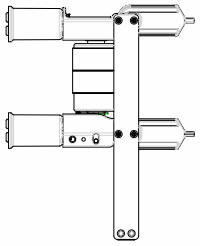 50 kA 1200/2000 A
15 16	5/40, 2000 A 5/40 SE, 2000 A	81A7040G08 81A7041G08	3	
17 18	5/40, 3000 A 5/40 SE, 3000 A	81A7040G09 81A7041G09	3	
19 20	5/50, 1200 A 5/50 SE, 1200 A	81A7040G10 81A7041G10	3	
21 22	5/50, 2000 A 5/50 SE, 2000 A	81A7040G11 81A7041G11	3	
23 24	5/50, 3000 A 5/50 SE, 3000 A	81A7040G12 81A7041G12	3	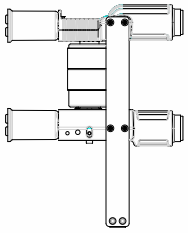 3000 A
25	50/63, 1200 A	8297A29H31	3	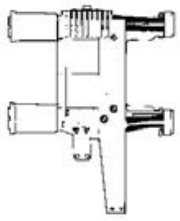
26	50/63, 2000 A	8297A30H31	3	
27	50/63, 3000 A	8297A31H31	3	

Instructions for installation, operation, and maintenance of type VCP-W vacuum circuit breakers

Instruction Booklet IB131029EN
Effective March 2022

Table 34. Recommended replacement parts for ANSI type VCP-W k=1 rated breakers (see Table 39 for common items not listed here) (continued next page).

Line no.	Description	Style number VCP-W K=1	Qty. per breaker	Typical view
28 29	8/40, 1200 A 8/40 SE, 1200 A	81A7040G13 81A7041G13	3	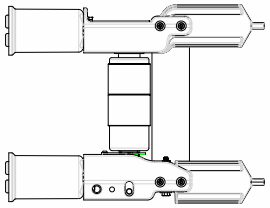
30 31	8/40, 2000 A 8/40 SE, 2000 A	81A7040G14 81A7041G14	3	
32 33	8/40, 3000 A 8/40 SE, 3000 A	81A7040G15 81A7041G15	3	
34 35	8/50, 1200 A 8/50 SE, 1200 A	81A7040G16 81A7041G16	3	
36 37	8/50, 2000 A 8/50 SE, 2000 A	81A7040G17 81A7041G17	3	
38 39	8/50, 3000 A 8/50 SE, 3000 A	81A7040G18 81A7041G18	3	25/32/40 kA 1200/2000 A
40 41	15/25, 1200 A 15/25 SE 1200 A	81A7040G19 81A7041G19	3	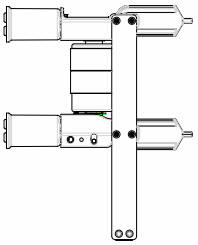
42 43	15/25, 2000 A 15/25 SE 2000 A	81A7040G20 81A7041G20	3	
44 45	15/25, 3000 A 15/25 SE, 3000 A	81A7040G21 81A7041G21	3	
46 47	15/32, 1200 A 5/32 SE, 1200 A	81A7040G22 81A7041G22	3	
48 49	15/32, 2000 A 15/32 SE, 2000 A	81A7040G23 81A7041G23	3	
50 51	15/32, 3000 A 15/32 SE, 3000 A	81A7040G24 81A7041G24	3	50 kA 1200/2000 A
52 53	15/40, 1200 A 15/40 SE, 1200 A	81A7040G25 81A7041G25	3	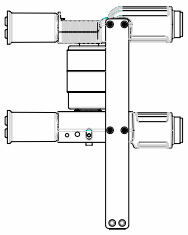
54 55	15/40, 2000 A 15/40 SE, 2000 A	81A7040G26 81A7041G26	3	
56 57	15/40, 3000 A 15/40 SE, 3000 A	81A7040G27 81A7041G27	3	
58 59	15/50, 1200 A 15/50 SE, 1200 A	81A7040G28 81A7041G28	3	
60 61	15/50, 2000 A 15/50 SE, 2000 A	81A7040G29 81A7041G29	3	
62 63	15/50, 3000 A 15/50 SE, 3000 A	81A7040G30 81A7041G30	3	3000 A
64	150/63, 1200 A	8297A29H31	3	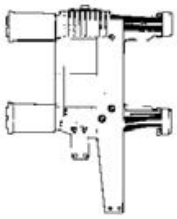
65	150/63, 2000 A	8297A30H31	3	
66	150/63, 3000 A	8297A31H31	3	

Table 34. Recommended replacement parts for ANSI type VCP-W k=1 rated breakers (see Table 39 for common items not listed here) (continued next page).

Line no.	Description	Style number VCP-W K=1	Qty. per breaker	Typical view
	Primary disconnects			
67	Up to 50 kA 1200 A & 2000 A	508B022G01	6	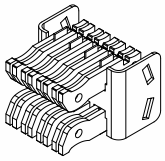
68	All 63 kA All 3000 A	692C037G01	6	
	Vacuum interupter kits			
69	25 kA, 1200 A	81A7042G01	3	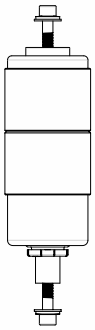
70	25 kA, 2000 A	81A7042G02	3	
71	25 kA, 3000 A	81A7042G03	3	
72	32 kA, 1200 A	81A7042G04	3	
73	32 kA, 2000 A	81A7042G05	3	
74	32 kA, 3000 A	81A7042G06	3	
75	40 kA, 1200 A	81A7042G07	3	
76	40 kA, 2000 A	81A7042G08	3	
77	40 kA, 3000 A	81A7042G09	3	
78	50 kA, 1200 A	81A7042G10	3	
79	50 kA, 2000 A	81A7042G11	3	
80	50 kA, 3000 A	81A7042G12	3	
	Drive rods			
81 82	25/40 kA (red spring) 25/40 kA SE (red spring)	83C7011G01 83C7011G03	3	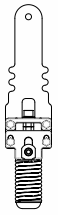
83 84	50 kA (black spring) 50 kA SE (black spring)	83C7011G02 83C7011G04	3	
85	All 63 kA	1c94385G01	3	

Instructions for installation, operation, and maintenance of type VCP-W vacuum circuit breakers

Instruction Booklet IB131029EN
Effective March 2022

Table 34. Recommended replacement parts for ANSI type VCP-W k=1 rated breakers (see Table 39 for common items not listed here).

Line no.	Description	Style number VCP-W K=1	Qty. per breaker	Typical view
	Tie bars			
86 87	25/40 kA 25/40 kA SE	82B4017H01 82B4017H11	6	
88 89	50 kA 50 kA SE	82B4017H04 82B4017H14	6	
90	All 63 kA	1c94404H01	6	
	Front cover (blank)			
91 92	25/40 kA 1200/2000 A 50 kA & all 3000 A	691C192H03 691C655H01	1 1	
	Front cover label kit			
93	Front cover label kit	81A7043G01	1	
	Phase barrier			
94	All 63 kA	691c648G02		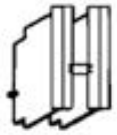
	Wire harness (complete replacement)			
95 96	Std. & UV UV w/shunt trip 2	691C281G07 691C281G08	1 1	
	Wire harness repair kit			
97	Wire harness repair kit (Replaces secondary disconnect only)	691C28G01	1	

Instruction Booklet IB131029EN
Effective March 2022

Table 35. Recommended replacement parts for ANSI type VCP-W MVA rated breakers (see Table 39 for common items not listed here) (continued next page).

Line no.	Description	Style number VCP-W MVA rated	Qty. per breaker	Typical view
	Pole unit assembly			
1 2	5/250, 1200 A 5/250 SE 1200 A	81A7040G07 81A7041G07	3	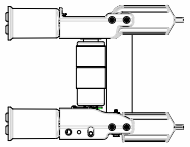 5/250 8/500 15/500 15/750 25/32/40 kA, 1200/2000 A
3 4	5/250, 2000 A 5/250 SE 2000 A	81A7040G08 81A7041G08	3	
5 6	5/250, 3000 A 5/250 SE, 3000 A	81A7040G09 81A7041G09	3	
7 8	5/350, 1200 A 5/350 SE, 1200 A	81A7040G10 81A7041G10	3	
9 10	5/350, 2000 A 5/350 SE, 2000 A	81A7040G11 81A7041G11	3	
11 12	5/350, 3000 A 5/350 SE, 3000 A	81A7040G12 81A7041G12	3	
13 14	8/500, 1200 A 8/500 SE, 1200 A	81A7040G13 81A7041G13	3	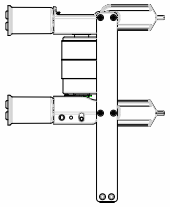 5/350 15/1000 50 kA 1200/2000 A
15 16	8/500, 2000 A 8/500 SE, 2000 A	81A7040G14 81A7041G14	3	
17 18	8/500, 3000 A 8/500 SE, 3000 A	81A7040G15 81A7041G15	3	
19 20	15/500, 1200 A 15/500 SE, 1200 A	81A7040G19 81A7041G19	3	
21 22	15/500, 2000 A 15/500 SE, 2000 A	81A7040G20 81A7041G20	3	
23 24	15/500, 3000 A 15/500 SE, 3000 A	81A7040G21 81A7041G21	3	
25 26	15/750, 1200 A 15/750 SE, 1200 A	81A7040G25 81A7041G25	3	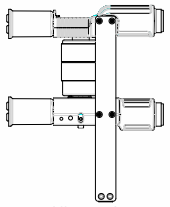 All 3000 A
27 28	15/750, 2000 A 15/750 SE, 2000 A	81A7040G26 81A7041G26	3	
29 30	15/750, 3000 A 15/750 SE, 3000 A	81A7040G27 81A7041G27	3	
31 32	15/1000, 1200 A 15/1000 SE, 1200 A	81A7040G28 81A7041G28	3	
33 34	15/1000, 2000 A 15/1000 SE, 2000 A	81A7040G29 81A7041G29	3	
35 36	15/1000, 3000 A 15/1000 SE, 3000 A	81A7040G30 81A7041G30	3	
37	50VCPW-ND 250	8297A02H03	3	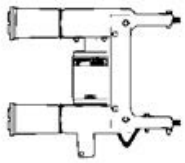

Instructions for installation, operation,
and maintenance of type
VCP-W vacuum circuit breakers

Instruction Booklet IB131029EN
Effective March 2022

Table 35. Recommended replacement parts for ANSI type VCP-W MVA rated breakers (see Table 39 for common items not listed here) (continued next page).

Line no.	Description	Style number VCP-W MVA rated	Qty. per breaker	Typical view
	Primary Disconnects			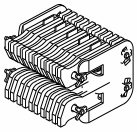
38	1200 A & 2000 A (except VCPW-ND)	508B022G01	6	
39	50VCPW-ND 250	502A851G02		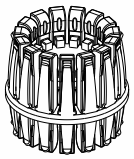
40	All 3000 A	692C037G01	6	
	Vacuum interupter kits			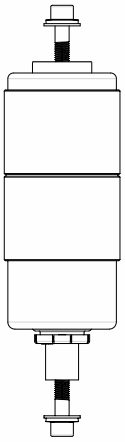
41	5/250 1200 A	81A7042G07	3	
42	5/250 2000 A	81A7042G08	3	
43	5/250 3000 A	81A7042G09	3	
44	5/350 1200 A	81A7042G10	3	
45	5/350 2000 A	81A7042G11	3	
46	5/350 3000 A	81A7042G12	3	
47	8/500 1200 A	81A7042G07	3	
48	8/500 2000 A	81A7042G08	3	
49	8/500 3000 A	81A7042G09	3	
50	15/500 1200 A	81A7042G01	3	
51	15/500 2000 A	81A7042G02	3	
52	15/500 3000 A	81A7042G03	3	
53	15/750 1200 A	81A7042G07	3	
54	15/750 2000 A	81A7042G08	3	
55	15/750 3000 A	81A7042G09	3	
56	15/1000 1200 A	81A7042G10	3	
57	15/1000 2000 A	81A7042G11	3	
58	15/1000 3000 A	81A7042G12	3	

Instruction Booklet IB131029EN
Effective March 2022

Table 35. Recommended replacement parts for ANSI type VCP-W MVA rated breakers (see Table 39 for common items not listed here) (continued next page).

Line no.	Description	Style number VCP-W MVA rated	Qty. per breaker	Typical view
	Drive rods			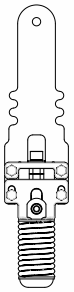
59	(Red spring) 5/250 8/500 15/500 15/750	83C7011G01	3	
60	(Red spring) 5/250 SE 8/500 SE 15/500 SE 15/750 SE	83C7011G03	3	
61	(Black spring) 5/350 15/1000	83C7011G02	3	
62	(Black spring) 5/350 SE 15/1000 SE	83C7011G04	3	
63	50VCPW-ND 250	692C799G01	3	
	Tie bars			
63	5/250 8/500 15/500 15/750	82B4017H01	3	
64	5/250 SE 8/500 SE 15/500 SE 15/750 SE	82B4017H11	3	
65	5/350 15/1000	82B4017H04	3	
66	5/350 SE 15/1000 SE	82B4017H14	3	
67	50VCPW-ND 250	3619A09H01	3	

Instructions for installation, operation, and maintenance of type VCP-W vacuum circuit breakers

Instruction Booklet IB131029EN
Effective March 2022

Table 35. Recommended replacement parts for ANSI type VCP-W MVA rated breakers (see Table 39 for common items not listed here).

Line no.	Description	Style number VCP-W MVA rated	Qty. per breaker	Typical view
	Front cover (blank)			
68	(1200/2000 A) 5/250, 5/250 SE 8/500, 8/500 SE 15/500, 15/500 SE 15/750, 15/750 SE	691C192H03	1	
69	(1200/2000 A) 5/350, 5/350 SE 15/1000, 15/1000 SE All 3000 A	691C655H01	1	
	Front cover label kit			
70	Front cover label kit	81A7043G01	1	
	Pole unit assembly			
71	50VCPW-ND 250	8297A02H03	3	
	Wire harness (complete replacement)			
72 73	Std. & UV UV w/shunt trip 2	691C281G07 691C281G08	1 1	
	Wire harness repair kit			
74	Wire harness repair kit (replaces secondary disconnect only)	691C28G01	1	
	Phase barrier kit (4 barriers per kit)			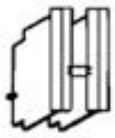
75	50VCPW-ND 250	694C622G03	1	

Instruction Booklet IB131029EN
Effective March 2022

Table 36. Recommended replacement parts for ANSI type VCP-W 27 kV rated breakers (see Table 39 for common items not listed here) (continued next page).

Line no.	Description	Style number VCP-W K=1	Qty. per breaker	Typical view
	Pole unit assembly			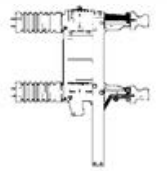
1	270/16/22/25-630A-37 kA	8299A04H01	3	
2	270/16/22/25-1200A-37 kA	8299A05H01	3	
3	270/16/22/25-2000A-37 kA	8299A02H01	3	
4	270/32, 1200A-50 kA	8299A05H21	3	
5	270/32 2000A-50 kA	8299A02H21	3	
6	270/40, 1200A-64 kA	8299A05H31	3	
7	270/40, 2000 A64 kA	8299A02H31	3	
	Primary disconnects			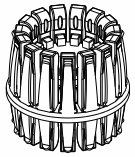
8	27 kV, 630-1200 A	699B352G01	6	
9	27 kV, 2000 A	502A852G02	6	
	Phase barrier kits			
10	27 kV	691C218H01	2	
	Drive rods			
11 12	27 kV (blue spring) 27 kV (black spring)	691C241G01 1C94715G01	3	
	Tie bars			
13 14	27 kV (up to 25 kA) 27 kV (31.5/40 kA)	691C223H01 1C94707H01	6	

Instructions for installation, operation, and maintenance of type VCP-W vacuum circuit breakers

Instruction Booklet IB131029EN
Effective March 2022

Table 36. Recommended replacement parts for ANSI type VCP-W 27 kV rated breakers (see Table 39 for common items not listed here) .

Line no.	Description	Style number VCP-W K=1	Qty. per breaker	Typical view
	Front cover (blank)			
15	All 27 kV	691C214H01	1	
	Label kit (front cover)			
16	Labels in kit Qty. Breaker latch 1 Front cover - Eaton ONLY 1 Warning notice read instructions 1	8295A45G04	1	
	Wire harness (complete replacement)			
17 18	Std. & UV UV w/shunt trip 2	691C281G05 691C281G06	1 1	
	Wiring harness repair kit			
19	Wire harness repair kit (replaces secondary disconnect only)	691C28G01	1	

Instruction Booklet IB131029EN
Effective March 2022

Table 37. Recommended replacement parts for ANSI type VCP-WC (Extra Capability) breakers 5-27 kV (see Table 39 for common items not listed here) (continued next page).

Line no.	Description	Style number VCP-WC (Extra Capability)	Qty. per breaker	Typical view
	Interrupter assembly			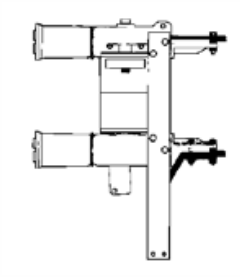
1	50/25C, 1200 A	8297A33H01	3	
2	50/25C, 2000 A	8297A33H02	3	
3	50/25C, 3000 A	8297A33H03	3	
4	50/40C, 1200 A	8297A34H01	3	
5	50/40C, 2000 A	8297A34H02	3	
6	50/40C, 3000 A	8297A34H03	3	
7	50/50C, 1200 A	8297A34H04	3	
8	50/50C, 2000 A	8297A34H05	3	
9	50/50C, 3000 A	8297A34H06	3	
10	50/63C, 1200 A	8297A35H01	3	
11	50/63C, 2000 A	8297A35H02	3	
12	50/63C, 3000 A	8297A35H03	3	
13	75/50C, 1200 A	8297A34H07	3	
14	75/50C, 2000 A	8297A34H08	3	
15	75/50C, 3000 A	8297A34H09	3	
16	150/25C, 1200 A	8297A33H11	3	
17	150/25C, 2000 A	8297A33H12	3	
18	150/25C, 3000 A	8297A33H13	3	
19	150/40C, 1200 A	8297A34H11	3	
20	150/40C, 2000 A	8297A34H12	3	
21	150/40C, 3000 A	8297A34H13	3	
22	150/50C, 1200 A	8297A34H14	3	
23	150/50C, 2000 A	8297A34H15	3	
24	150/50C, 3000 A	8297A34H16	3	
25	150/63C, 1200 A	8297A35H11	3	
26	150/63C, 2000 A	8297A35H12	3	
27	150/63C, 3000 A	8297A35H13	3	
28	270/25C, 1200 A	8297A36H01	3	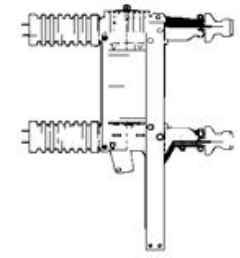
29	270/25C, 1600 A	8297A36H02	3	
30	270/32C, 1200 A	8297A36H03	3	
31	270/32C, 1 600 A	8297A36H04	3	
32	270/40C, 1200 A	8297A36H05	3	
33	270/40C, 1600 A	8297A36H06	3	
	Primary disconnects			
34	Up to 15 kV, 1200 A	508B022G01	3	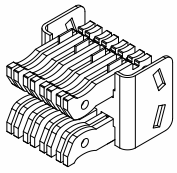
35	Up to 15 kV, 2000 A	508B012G01	3	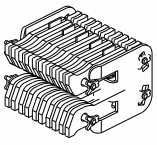

Instructions for installation, operation,
and maintenance of type
VCP-W vacuum circuit breakers

Instruction Booklet IB131029EN
Effective March 2022

Table 37. Recommended replacement parts for ANSI type VCP-WC (Extra Capability) breakers 5-27 kV (see Table 39 for common items not listed here) (continued next page).

Line no.	Description	Style number VCP-WC (Extra Capability)	Qty. per breaker	Typical view
36	Up to 15 kV, 3000 A	692C037G01	6	
37	27 kV,1200 A	699B352G01	6	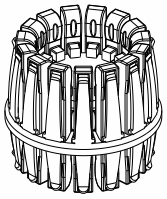
38	27 kV, 2000 A	502A852G02	6	
	Phase barrier kits (2 barriers per kit)			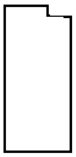
39 40	15kV inside 2000 A 15 kV outside 1200/2000 A	694C549G03 694C549G06	1	
41	27 kV Inside	691C218H01	2	
42	15 kV inside 3000 A	691C648G01	1	
	Drive rods			
43 44 45 46 47	Up to 15 kV - white springs Up to 15 kV - blue springs Up to 15 kV - red springs 27 kV (blue spring) 27 kV (black spring)	691C650G01 691C651G01 691C651G03 691C241G01 1C94715G01	3	

Table 37. Recommended replacement parts for ANSI type VCP-WC (Extra Capability) breakers 5-27 kV (see Table 39 for common items not listed here)

Line no.	Description	Style number VCP-WC (Extra Capability)	Qty. per breaker	Typical view
	Tie bars			
48	Up to 15 kV 50 kA	3619A09H01	6	
49	Up to 15 kV 50 kA SE	691C271H01	6	
50	63 kA only	1C94404H01	6	
51	27 kV (up to 25 kA)	691C223H01	6	
52	27 kV (31.5/40 kA)	1C94707H01		
	Front cover (blank)			
53	Up to 15 kV 25/40 kA 1200/2000 A	691C192H03	1	
54	Up to 15 kV 50/63 kA & all 3000 A	691C655H01	1	
55	All 27 kV	691C214H01	1	
	Label kit (front cover)			
56	Labels in kit Qty. Breaker latch 1 Front cover - Eaton ONLY 1 Warning notice read instructions 1	8295A45G04	1	
	Wire harness (complete replacement)			
57	Std. & UV	691C281G03	1	
58	UV w/shunt trip 2	691C281G04	1	
	Wiring harness repair kit			
59	Wire harness repair kit (replaces secondary disconnect only)	691C28G01	1	

Instructions for installation, operation, and maintenance of type VCP-W vacuum circuit breakers

Instruction Booklet IB131029EN
Effective March 2022

Table 38. Recommended replacement parts for IEC type VCP-W rated breakers (see Table 39 for common items not listed here) (continued next page).

Line no.	Description	Style number		Qty. per breaker	Typical view
		Up to 17.5 kV	24 kV		
	Interrupter assembly				
1	36/25- 630 A	8299A01H01		3	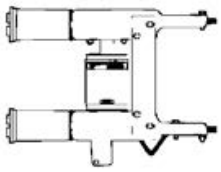
2	36/25- 1250 A	8299A01H02		3	
3	36/25- 2000 A	8299A01H03		3	
4	36/32-1250 A	8299A01H04		3	
5	36/32- 2000 A	8299A01H05		3	
6	36/40-1250 A	8299A01H06		3	
7	36/40-2000 A	8299A01H07		3	
8	72/25- 630 A	8299A01H08		3	
9	72/25- 1250 A	8299A01H09		3	
10	72/25- 2000 A	8299A01H10		3	
11	72/32-1250 A	8299A01H11		3	
12	72/32- 2000 A	8299A01H12		3	
13	72/40- 1250 A	8299A01H13		3	
14	72/40- 2000 A	8299A01H14		3	
15	120/25-630 A	8299A01H15		3	
16	120/25-1250 A	8299A01H16		3	
17	120/25-2000 A	8299A01H17		3	
18	120/32-1250 A	8299A01H18		3	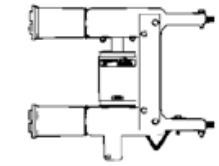
19	120/32-2000 A	8299A01H19		3	
20	Interrupter assembly	8299A01H20		3	
21	120/40-1250 A	8299A01H21		3	
	120/40-2000 A				
22	175/25-1250 A	8299A01H22		3	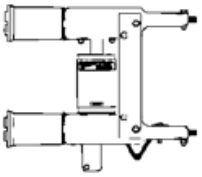
23	175/25-2000 A	8299A01H23		3	
24	175/32-1250 A	8299A01H24		3	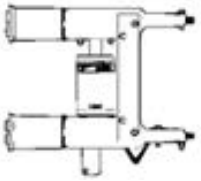
25	175/32-2000 A	8299A01H25		3	
26	175/40-1250 A	8299A01H26		3	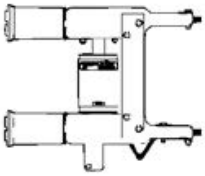
27	175/40-1250 A	8299A01H27		3	
28	240/25-650 A		8299A01H28	3	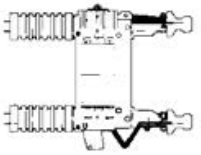
29	240/25-1250 A		8299A01H29	3	
30	240/25-2000 A		8299A01H30	3	

Instruction Booklet IB131029EN
Effective March 2022

Table 38. Recommended replacement parts for IEC type VCP-W rated breakers (see Table 39 for common items not listed here) (continued next page).

Line no.	Description	Style number		Qty. per breaker	Typical view
		Up to 17.5 kV	24 kV		
	Primary disconnects				
31 32	Up to 175/40-630 A Up to 175/40-1250 A	699B104G01 699B104G01		6 6	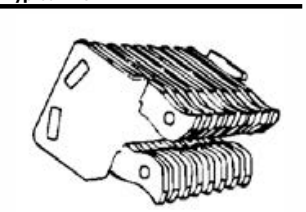
33	Up to 175/40-2000 A	508B012G01		6	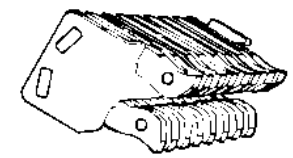
34	240/25-630 A		699B352G01	6	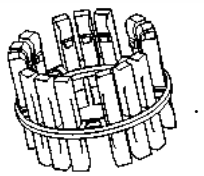
35 36	240/25-1250 A 240/25-2000 A		699B352G01 699B352G02	6 6	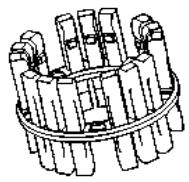
	Phase barriers				
37 38	Up to 175/40 240/25	691C176H04	 691C218H01	2 2	
	Push rod assemblies				
39 40 41	Up to 175/40-white springs Up to 175/40-blue springs 240/25	691C650G01 691C651G01	 691C241G01	3 3 3	

Table 38. Recommended replacement parts for IEC type VCP-W rated breakers (see Table 39 for common items not listed here).

Line no.	Description	Style number		Qty. per breaker	Typical view
		Up to 17.5 kV	24 kV		
	Tie bars				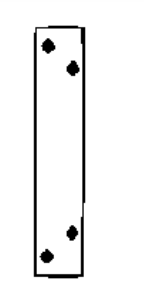
42	Up to 175/40	3619A09H01		6	
43	240/25		691C223H01	6	

Table 39. Recommended replacement parts for type VCP-W breakers (continued next page).

Line no.	Description	Style number	Qty. per breaker	Typical view
	Charging motor push terminals			
1	48 Vdc (push terminal)	699B196G03	1	
2	125 Vdc / 120 Vac (push terminal)	699B196G01	1	
3	250 Vdc / 240 Vac (push terminal)	699B196G02	1	
4	48 Vdc (ring terminal)	699B196G06	1	
5	125 Vdc / 120 Vac (ring terminal)	699B196G04	1	
6	250 Vdc / 240 Vac (ring terminal)	699B196G05	1	
	Motor brush kit			
7	Motor Brush Kit	8063A77G01	1	
	Spring release coils			
8	48 Vdc (push terminal)	3759A76G01	1	
9	125 Vdc / 120 Vac (push terminal)	3759A76G02	1	
10	250 Vdc / 240 Vac (push terminal)	3759A76G03	1	
11	48 Vdc (ring terminal)	3759A76G11	1	
12	125 Vdc / 120 Vac (ring terminal)	3759A76G12	1	
13	250 Vdc / 240 Vac (ring terminal)	3759A76G13	1	
	Anti pump relay			
14	48 Vdc (push terminal)	3759A74G03	1	
15	125 Vdc (push terminal)	3759A74G04	1	
16	250 Vdc (push terminal)	3759A74G05	1	
17	120 Vac (push terminal)	3759A74G01	1	
18	240 Vac (push terminal)	3759A74G02	1	
19	48 Vdc (ring terminal)	8237A27H03	1	
20	125 Vdc (ring terminal)	8237A27H04	1	
21	250 Vdc (ring terminal)	8237A27H05	1	
22	120 Vac (ring terminal)	8237A27H01	1	
23	240 Vac (ring terminal)	8237A27H02	1	
	Rectifier (120/240 Vac)			
24	Rectifier (push terminal)	3759A79G01	1	
25	Rectifier (ring terminal)	3759A79G02	1	

Instructions for installation, operation,
and maintenance of type
VCP-W vacuum circuit breakers

Instruction Booklet IB131029EN
Effective March 2022

Table 39. Recommended replacement parts for type VCP-W breakers (continued next page).

Line no.	Description	Style number	Qty. per breaker	Typical view
	Shunt trip coils			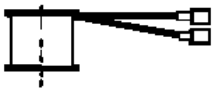
26	24 Vdc (push terminal)	3759A76G04	1	
27	48 Vdc (push terminal)	3759A76G01	1	
28	125 Vac/125 Vdc (push terminal)	3759A76G02	1	
29	240 Vac/250 Vdc (push terminal)	3759A76G03	1	
30	24 Vdc (ring terminal)	3759A76G14	1	
31	48 Vdc (ring terminal)	3759A76G11	1	
32	125 Vac/125 Vdc (ring terminal)	3759A76G12	1	
33	240 Vac/250 Vdc (ring terminal)	3759A76G13	1	
	UV trip coils			
34	48 Vdc	8064A19G01	1	
35	125 Vdc	8064A19G02	1	
36	250 Vdc	8064A19G03	1	
37	120 Vac	8064A19G09	1	
38	240 Vac	8064A19G10	1	
	Motor cut off switch			
39	Motor cut off switch	699B199G01	1	
	Latch check off switch			
40	Latch check switch	699B199G01	1	
	Position switch			
41	Position switch 1	8064A03G01	1	
42	Position switch 2	3759A93G01	1	
	Auxiliary switch			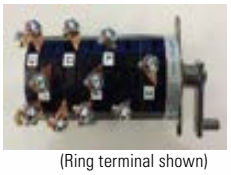 (Ring terminal shown)
43	Auxiliary Switch (push terminal)	698B822H01	1	
44	Auxiliary Switch (ring terminal)	5697B02G01	1	
	Trip D-shaft			
45	Trip D-shaft	694C638G02	1	

Table 39. Recommended replacement parts for type VCP-W breakers (continued next page).

Line no.	Description	Style number	Qty. per breaker	Typical view
	Main link & trip latch			
46	Main link & trip latch	3A75675G01	1	
	Ground contact assembly			
47	All except VCPW-ND	691C506G01	1	
48	VCPW-ND	691C506G02	1	
	Breaker rail wheel (not roll on floor)			
49	All Except VCPW-ND	3617A99G01	4	
50	VCPW-ND	8237A50H01	4	
	Fasteners kit			
51	**Fasteners in kit** / **Qty.** X-washer - 0.188" 32 X-washer - 0.250" 14 X-washer - 0.312" 18 X-washer - 0.375" 40 X-washer - 0.500" 18 E-ring - 0.250" 11 E-ring - 0.500" 6 C-ring - 0.125" 6 C-ring - 0.375" 6 Envelope AR Bag 1 Tag, style number 1 Ret. ring - 0.250" 5 Ret. ring - 0.375" 5 X-washer - 0.625" 5 Spring clip III 6 Ret. ring - 0.188" 6 Gripping - Ret. ring HD 6 Ret. grip ring - 0.375" 6 Fiber washer 10 X-washer 0.500" stainless 18	8061A01G01	1	
	Reverse color label kit			
52	Reverse color (Open/Close labels kit) **Reverse color labels in kit** / **Qty. per kit** Push to open 100 Push to close 100 Closed 100 Open 100	66A5067G01	1	

Table 39. Recommended replacement parts for type VCP-W breakers.

Line no.	Description	Style number	Qty. per breaker	Typical view
	UV trip kit			
53	48 Vdc	691C274G01	1	
54	125 Vdc	691C274G02	1	
55	250 Vdc	691C274G03	1	
37	120 Vac	691C274G04	1	
56	240 Vac	691C274G05	1	
	Closure test			
57	Closure Test	6352C58G01	1	

Instruction Booklet IB131029EN
Effective March 2022

8. Optional accessories

8.1 Optional factory installed roll-on-floor wheel kit

Eaton (29" wide frame) breakers:

- Rated at 5, 15, or 27 kV - can be ordered with the "optional" factory installed, roll-on-floor wheel kit, as configured through Bidmanager.

Note: This roll-on-floor wheel kit can also be ordered as an aftermarket item and installed in the field as required.

Figure 46. Roll-on-floor wheel kit (shown installed on a standard 5/15 kV VCP-W breaker).

The center wheel on the 27 kV roll on the floor breaker is rotated 180 degrees from the picture shown above to align better with the center of gravity.

8.2 Optional automatic/manual hybrid secondary for BPI pan assembly

Figure 45 represents an automatic engaging secondary with a manual release feature incorporated into the BPI pan assembly. It requires the customer to manually lift up the secondary release lever to allow the secondary harness to engage the breaker in the DISCONNECT/TEST position.

The secondary harness will then disengage automatically when the breaker returns to the DISCONNECT/TEST position.

The slider interlocks from the non-BPI pan assembly: Figure 14 displays the "Z" shaped slider interlock that prevents a closed breaker from being levered out of the cell has been incorporated into this feature.

Instructions for installation, operation,
and maintenance of type
VCP-W vacuum circuit breakers

Instruction Booklet IB131029EN
Effective March 2022

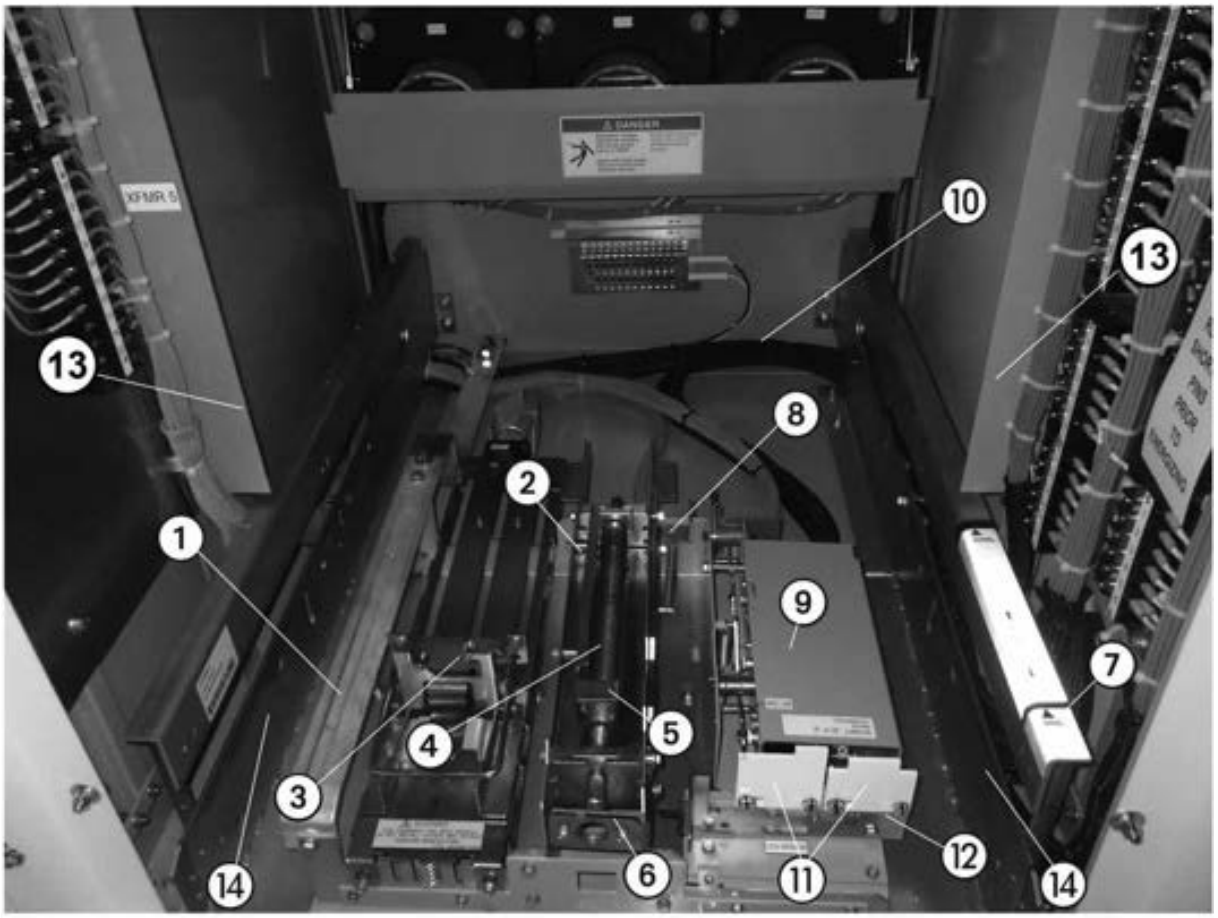

Legend

1. Ground contacts
2. Levering system.
3. Automatic/manual secondary
4. Racking screw
5. Moving block
6. Slider
7. Breaker position indication
8. Slider interlocks
9. MOC switch
10. TOC switch location (see Figure 12 for actual TOC)
11. Coding plates
12. Provision for padlocking
13. Picture frame
14. Breaker rail

Figure 47. Optional automatic/manual secondary for BPI pan assembly.

This optional accessory is style number 1C20335G01.

Instruction Booklet IB131029EN
Effective March 2022

8.3 Optional 3,000 A ball screw drive for BPI pan assembly

A ball screw kit has been developed for the BPI pan assembly to reduce the required force to manually rack in a 63 kA or 3,000 A breaker. If the customer is using a MR2 system to lever in the breakers, then this system is not required.

This optional accessory is style number 1C20376G01.

Instructions for installation, operation,
and maintenance of type
VCP-W vacuum circuit breakers

Instruction Booklet IB131029EN
Effective March 2022

Notes:

Eaton Medium Voltage 5/8/15 VCP-W Circuit Breaker Manual

Instruction Booklet IB131029EN
Effective March 2022

Instructions for installation, operation, and maintenance of type VCP-W vacuum circuit breakers

DISCLAIMER OF WARRANTIES AND LIMITATION OF LIABILITY

The information, recommendations, descriptions and safety notations in this document are based on Eaton Corporation's ("Eaton") experience and judgment and may not cover all contingencies. If further information is required, an Eaton sales office should be consulted. Sale of the product shown in this literature is subject to the terms and conditions outlined in appropriate Eaton selling policies or other contractual agreement between Eaton and the purchaser.

THERE ARE NO UNDERSTANDINGS, AGREEMENTS, WARRANTIES, EXPRESSED OR IMPLIED, INCLUDING WARRANTIES OF FITNESS FOR A PARTICULAR PURPOSE OR MERCHANTABILITY, OTHER THAN THOSE SPECIFICALLY SET OUT IN ANY EXISTING CONTRACT BETWEEN THE PARTIES. ANY SUCH CONTRACT STATES THE ENTIRE OBLIGATION OF EATON. THE CONTENTS OF THIS DOCUMENT SHALL NOT BECOME PART OF OR MODIFY ANY CONTRACT BETWEEN THE PARTIES.

In no event will Eaton be responsible to the purchaser or user in contract, in tort (including negligence), strict liability or otherwise for any special, indirect, incidental or consequential damage or loss whatsoever, including but not limited to damage or loss of use of equipment, plant or power system, cost of capital, loss of power, additional expenses in the use of existing power facilities, or claims against the purchaser or user by its customers resulting from the use of the information, recommendations and descriptions contained herein. The information contained in this manual is subject to change without notice.

Eaton
1000 Eaton Boulevard
Cleveland, OH 44122
United States
Eaton.com

© 2022 Eaton
All Rights Reserved
Printed in USA
Publication No. IB131029EN / TBG001564
March 2022

Powering Business Worldwide

Eaton is a registered trademark.

All other trademarks are property of their respective owners.

BILL OF MATERIALS

Caterpillar: Confidential Green

Part Number	Manufacturer / Part Description	Qty
CT101-502	5000:5A AMRAN - CURRENT TRANSFORMERS, SGL RATIO, STD ACCURACY	3
GW-2006	BEECH BREAKER LIFT DEVICE	1
MTWDN7CDM500RXB02	BITRONICS POWERPLEX II TRANSDUCER	4
COMP-REMOTE-MONITOR	DELL MONITOR	1
COMP-REMOTE-PC	DELL OPTIPLEX MICRO PC	1
COMP-TSP-E-05	DYNICS ENHANCED TOUCHSCREEN PROCESSOR	1
FAZ-C20/1-SP	EATON 20, 1 POLE CB	1
FAZ-C15/2-NA-DC	EATON 40A, 1POLE CB HIGH-IN-RUSH	3
10250T597LRH24-1X	EATON E-STOP SWITCH ASSEMBLY	2
10250T197LGP24	EATON GREEN PILOT LIGHT, LED, 24V	6
10250T101-2	EATON PUSH BUTTON 30MM, BLACK NON-ILLUM.	1
10250T197LRP24	EATON RED PILOT LIGHT, LED, 24V	6
7803E	ELECTROSWITCH 86 LOR, 3-DECK	6
74902QF	ELECTROSWITCH CB CONTROL SWITCH	4
2438D	ELECTROSWITCH CB CONTROL SWITCH	2
TS-19WS-24VDC-ISO	ELO 19" WIDESCREEN TOUCHSCREEN, 24VDC	0
WF-3823	EPSON WORKFORCE PRO PRINTER	1
FT-181	GE 10-POLE TEST SWITCH (C-C-C-C C-C-C-C C-C)	2
FT-247	GE 10-POLE TEST SWITCH (C-C-C-C P P P P P P)	6
COMP-RAS-S-01	HARMONY P6, INTEL ATOM X6211E, 2 CORE, 4GB RAM	1
SPIDER-SL-20-01T1M29999SY9HHHH	HIRSCHMANN UNMANAGED FIBER ETHERNET SWITCH SPIDER III w/ SC CONNECTOR	4
AGP1218	HOFFMAN 12 GAUGE GLAND PLATE	2
N280416G151	HOFFMAN COOLING UNIT	2
CEL550M	HOFFMAN LIGHT KIT	2
A903624FSG	HOFFMAN SINGLE DOOR TYPE 1 FREE-STAND ENCLOSURE	2
EX5-MDBUS-NA00	KEPWARE VERSION 5	0
170ADM85010	MODICON 24-32VDC 16PT IN/16 PT OUT	4
170AMM11030	MODICON 2AI 2AO 16DI/8DO 10-45VDC BASE	4
171CBU98091	MODICON M1E UNITY, PROCESSOR	6
2897156	PHOENIX 16 PT INPUT MODULE 24VDC	1
2897253	PHOENIX 16 PT OUTPUT MODULE 24VDC	1
2703981	PHOENIX BUS COUPLER UDP 24VDC	2
2891030	PHOENIX CONTACT 5TX MANAGED ETHERNET SWITCH	9
1085256	PHOENIX CONTACT 8TX UNMANAGED ETHERNET SWITCH	0
1357875	PHOENIX MGUARD 4305 FIREWALL SECURITY ROUTER	1
2904602	PHOENIX POWER SUPPLY, 20A, 24VDC, 120VAC or 125VDC INPUT	1
DA50A0BNN0000020	RED LION FLEXEDGE 50 GROUP 2	0
9701-VWSCWAENE	ROCKWELL FACTORYTALK CLIENT	1
SOFT-FACTORYTALK-BUNDLE	ROCKWELL FACTORYTALK SERVER AND CLIENT BUNDLE	1
LC1D258BL	SCHNEIDER TESYS DECA CONTACTOR	1
0700G11B1B0X76850300	SCHWEITZER SEL-700G1+ RELAY	1
751001B1B0X70851D00	SCHWEITZER SEL-751 RELAY	1
751201B1B0X70851D00	SCHWEITZER SEL-751 RELAY	2
751001B1B0X0XA51D00	SCHWEITZER SEL-751 RELAY	2
52AAGM	SIEMENS E-STOP SHROUD	0
MCM110SC2	STARTECH MULTIMODE SC FIBER ETHERNET MEDIA CONVERTER w/ SC CONNECTOR	1
468-277	TTL 277:120 POTENTIAL XFMR, 75 VA	3

Part Number	Manufacturer / Part Description	Qty
BATT-125VDC	125VDC BATTERY STATION INCLUDING:	1
BATT-A77DE-12-130V-ABD1-60LR	LAMARCHE 125 VDC FILTERED BATTERY CHARGER RATED 12 AMPS OUTPUT WITH 120/240/208 VAC, SINGLE PHASE, 60 HERTZ INPUT COMPLETE WITH THE FOLLOWING OPTIONS: 46R DISCRETE ALARM RELAYS 538 IBC CERTIFICATION LABEL	1
BATT-60-SGC12-70	C&D 125 VDC SGC SERIES VRLA BATTERY CONSISTING OF 60 CELLS, TEN 6-CELL UNITS, OF MODEL SGC12-70 RATED 69 AH	1
BATT-RE05380BD-150	C & D CONNECTION KIT	1
BATT-RD05166BD-2TEP	C & D TWO TIER, SINGLE ROW, SEISMIC BATTERY RACK	1

MANUFACTURER DATA SHEETS

Caterpillar: Confidential Green

Amran Part # CT101-502

Model CT101 – Single Ratio Current Transformers for Switchgear Type Applications
Window 6.5", 600V, 10kV BIL

AMRAN
INSTRUMENT TRANSFORMERS

c UL us E205113 231838

- **UL, cUL Recognized and CSA Certified**
- **As per ANSI/IEEE C57.13, IEC, OR relevant standard**
- ***Approved for revenue metering by Industry Canada No. AE-2240**

TABLES

CATALOG NUMBER	CURRENT RATIO	RELAY CLASS	ANSI METERING CLASS @ 60 HZ				
			B0.1	B0.2	B0.5	B0.9	B1.8
CT101-500	50:5	-	4.8	-	-	-	-
CT101-750	75:5	C 10	4.8	4.8	-	-	-
CT101-101	100:5	C 10	2.4	2.4	4.8	-	-
CT101-151	150:5	C 20	1.2	1.2	2.4	4.8	4.8
CT101-201*	200:5	C 20	0.6	1.2	2.4	2.4	4.8
CT101-251*	250:5	C 20	0.6	0.6	1.2	1.2	2.4
CT101-301*	300:5	C 20	0.3	0.6	1.2	1.2	2.4
CT101-401*	400:5	C 50	0.3	0.3	0.6	1.2	2.4
CT101-501*	500:5	C 50	0.3	0.3	0.3	0.6	1.2
CT101-601*	600:5	C100	0.3	0.3	0.3	0.6	0.6
CT101-701*	700:5	C100	0.3	0.3	0.3	0.6	0.6
CT101-751*	750:5	C100	0.3	0.3	0.3	0.3	0.3
CT101-801*	800:5	C100	0.3	0.3	0.3	0.3	0.3
CT101-102*	1000:5	C100	0.3	0.3	0.3	0.3	0.3
CT101-122*	1200:5	C200	0.15	0.15	0.15	0.15	0.3
CT101-152*	1500:5	C200	0.15	0.15	0.15	0.15	0.15
CT101-162*	1600:5	C200	0.15	0.15	0.15	0.15	0.15
CT101-202*	2000:5	C200	0.15	0.15	0.15	0.15	0.15
CT101-252*	2500:5	C200	0.15	0.15	0.15	0.15	0.15
CT101-302*	3000:5	C200	0.15	0.15	0.15	0.15	0.15
CT101-322*	3200:5	C200	0.15	0.15	0.15	0.15	0.15
CT101-352*	3500:5	C200	0.15	0.15	0.15	0.15	0.15
CT101-402*	4000:5	C200	0.15	0.15	0.15	0.15	0.15
CT101-502	5000:5	C200	0.15	0.15	0.15	0.15	0.15
CT101-602	6000:5	C200	0.15	0.15	0.15	0.15	0.15

INSULATION LEVEL
600 V, BIL 10kV full wave

FREQUENCY
50-400 Hz

THERMAL RATING
50:5-3000:5 - 2.0 @ 30° C ambient
1.5 @ 55° C ambient

3200:5-4000:5 - 1.5 @ 30° C ambient
1.33@ 55° C ambient

5000:5 - 1.0 @ 30° C ambient
0.8 @ 55° C ambient

6000:5 - 0.8 @ 30° C ambient
0.6 @ 55°C ambient

OUTER ENCAPSULATION
Plastic Cased

SECONDARY TERMINALS
Brass screw # 10-32 with one flat washer, accessible from either side

APPROX. WEIGHT
30 lbs.

CUSTOM OPTIONS (CONTACT US)
- Different Ratios
- IEC Ratios/Accuracies
- Non-standard thermal rating
- Different encapsulation
- Different secondary termination
- Special mounting needs

AMRAN INC., 12320 Cardinal Mdw, Suite 100, Sugar Land, TX 77478 - Phone: 281-243-2200 - Toll Free: 866-829-1572 - Fax: 281-243-2205
sales@amranit.com – www.amranit.com

Amran Part # CT101-401

Model CT101 – Single Ratio Current Transformers for Switchgear Type Applications
Window 6.5”, 600V, 10kV BIL

AMRAN
INSTRUMENT TRANSFORMERS

DIMENSIONS: INCHES [mm]

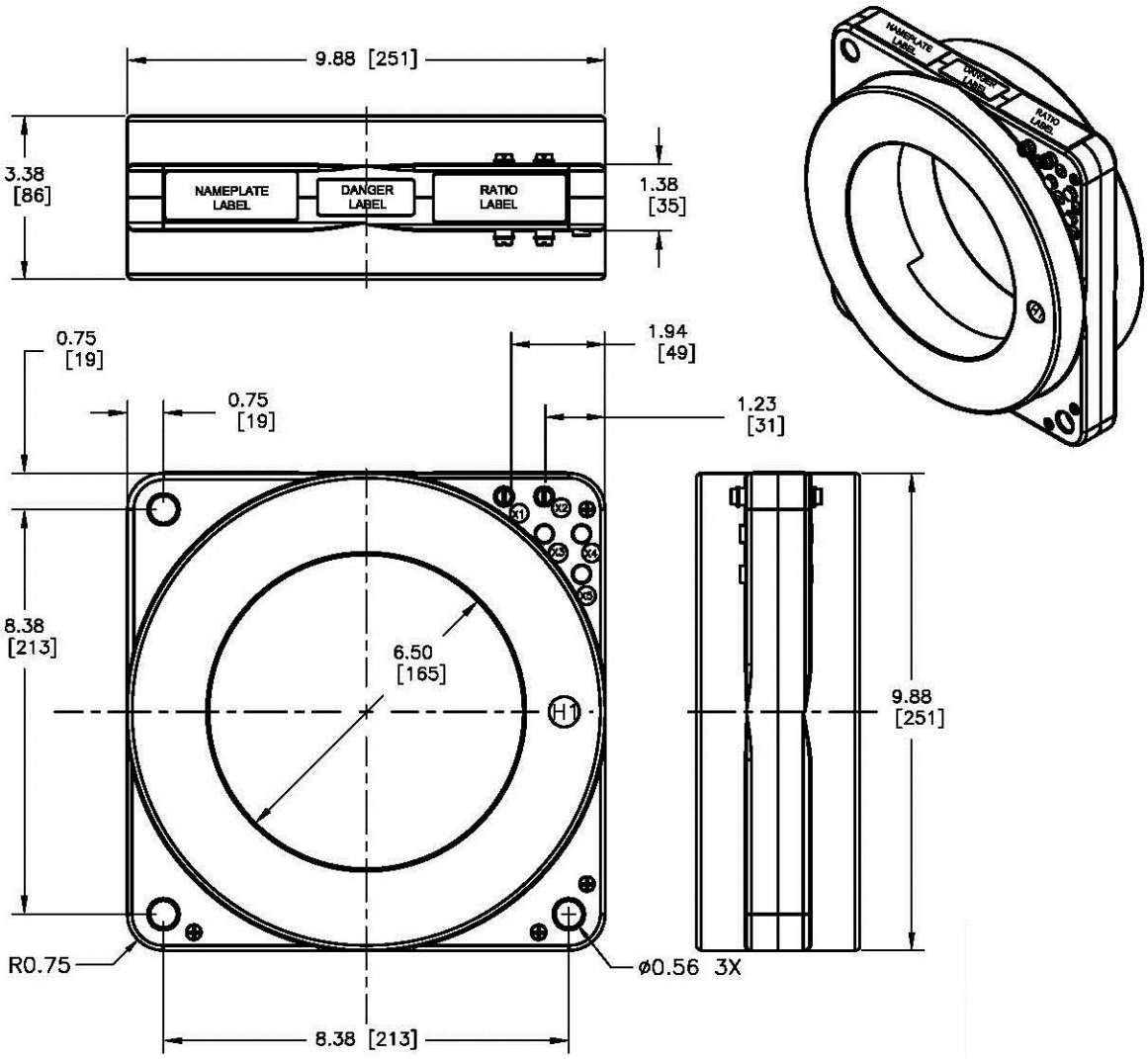

EXCITATION CURVES:

Available upon request:

Amran Part # CT101-401

AMRAN
INSTRUMENT TRANSFORMERS

CURRENT TRANSFORMER EXCITATION CURVES

DRAWN: Scott McCloskey DATE: 2/9/12 CHECKED: Chetas. DWG No.: CT101-401ex.doc . SERIAL No.: TYPICAL

Ratio	Secondary Turns	Secondary Taps
400:5	80	X1-X2

Amran Part No.:	CT101-401
Nominal Ratio:	400:5
Secondary Resistance:	0.146 Ohms @ 75 deg. C
Relay Accuracy Class:	C50 per ANSI C57.13-1993
Burden:	0.5 Ohms at PF 0.9
Thermal Rating Factor:	2.0 @ 30 deg C Ambient
Frequency:	60Hz

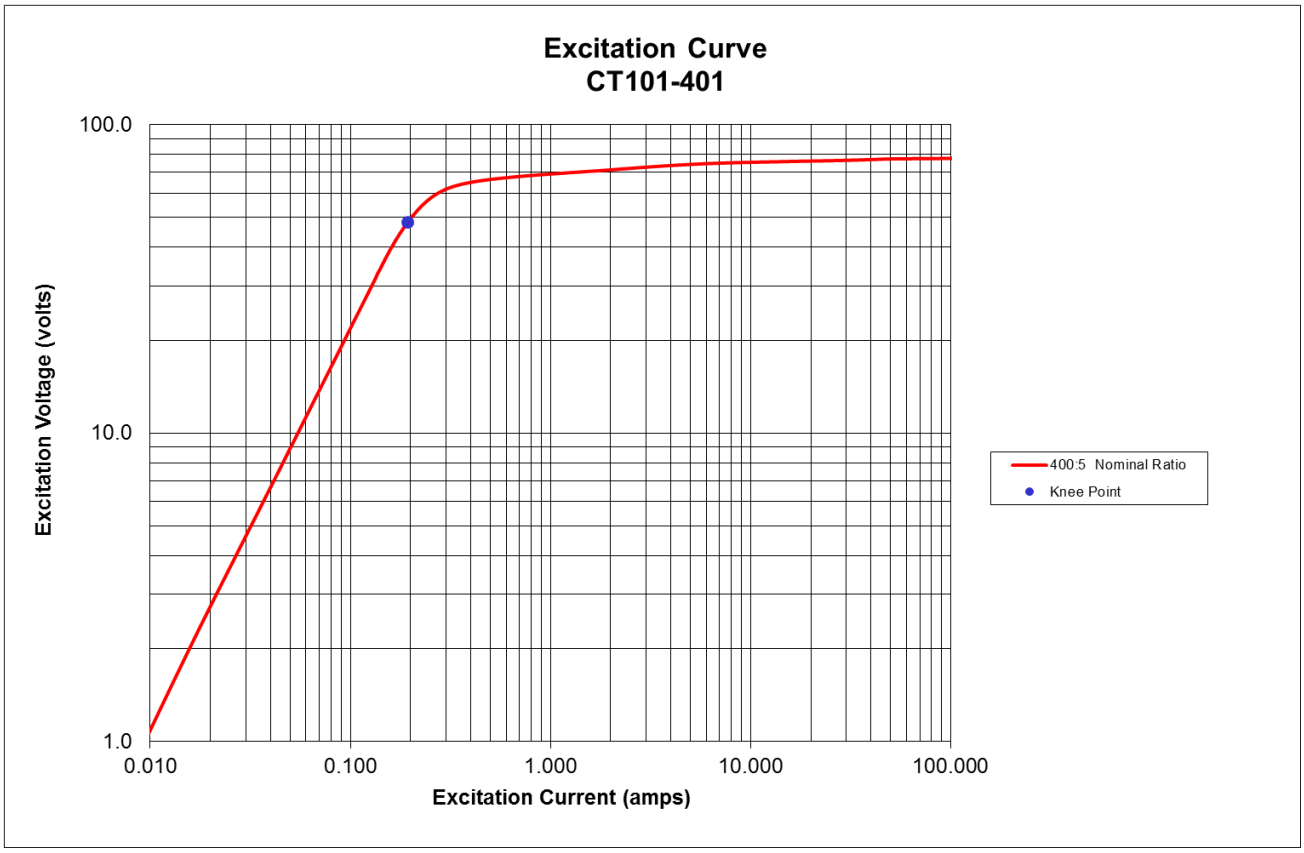

41659 - NOLAND WWTP

C & D BATTERY & LAMARCHE CHARGER

ITEM 1 – VRLA BATTERY

1 - C & D 125 VDC SGC SERIES VRLA BATTERY CONSISTING OF 60 CELLS, TEN 6-CELL UNITS, OF MODEL SGC12-70 RATED 69 AH AND SIZED TO POWER 6 MV CIRCUIT BREAKERS WITH A 10% DESIGN MARGIN, 25% AGING FACTOR TO 1.75 VOLTS PER CELL AT 60° F WITH A 4.25 AMP CONTINUOUS LOAD FOR 8 HOURS.

ITEM 2 – CONNECTION KIT

1 - C & D CONNECTION KIT FOR ABOVE, PART # RE05380BD-150

ITEM 3 – BATTERY RACK

1 - C & D TWO TIER, SINGLE ROW, SEISMIC BATTERY RACK, PART # RD05166BD-2TEP, DESIGNED TO SUPPORT 60 CELLS, TEN UNITS, OF SGC 12-70.

ITEM 4 – BATTERY CHARGER

1 - LAMARCHE 125 VDC FILTERED BATTERY CHARGER MODEL A77DE-12-130V-ABD1-60LR RATED 12 AMPS OUTPUT WITH 120/240/208 VAC, SINGLE PHASE, 60 HERTZ INPUT COMPLETE WITH THE FOLLOWING OPTIONS:

46R DISCRETE ALARM RELAYS
538 IBC CERTIFICATION LABEL

C&D TECHNOLOGIES
Power Solutions

12-1007

C&D TECHNOLOGIES® SG&C

SWITCH GEAR & CONTROL

SGC Series

Valve Regulated Lead Acid (VRLA) Battery Series
Ideally Suited for Switchgear & Control Applications

APPLICATIONS

- Battery Change-Out Trucks
- Electric Utility Substations
- Telephone Backup
- Microwave Sites
- Signaling Sites
- Offshore Platforms

FEATURES & BENEFITS

HIGH RELIABILITY

- Thermally welded case-to-cover bond for hermetic, leak free seal
- Molded in terminal bushing for durability and leak free seal
- Thick positive grids and superior grid alloy for improved high temperature performance and longer life
- UL-recognized component
- Complies with UL1778, UL924, UL1989 and UL94

SAFE OPERATION

- Flame-arresting one-way pressure-relief vent for safety and long life
- Flame-retardant polypropylene case and cover compliant with UL94 V-0 with an Limiting Oxygen Index greater than 28.

  -Self-extinguishing features for added protection
- Can be used in rooms with normal ventilation mounted on racks or in cabinets. A separate battery room is not required.
- Absorbent Glass Mat (AGM) technology for efficient gas recombination of 99% plus.

  -No free electrolyte – prevents acid spills in case of accidental damage

REDUCED MAINTENANCE

- No electrolyte maintenance required
- Multi-cell design for ease of installation by significantly minimizing connections
- Threaded copper alloy terminal inserts eliminate connection re-torque requirements

EASILY TRANSPORTED

- Not restricted for air transport - Complies with IATA/ICAO Special Provision A67
- Not restricted for surface transport – classified as non-hazardous material as related to DOT-CFR Title 49 parts 171-189
- Not restricted for water transport – Classified as non-hazardous material, complies with IMDG exception 238

WARRANTY

- 2 years full + 8 pro-rated

SPECIFICATIONS

Cells Per Unit	6
Voltage Per Unit	12
Operating Temperature Range (with temperature compensation)	Discharge: -40°F (-40°C) to +160°F (71°C) Charge: -10°F (-23°C) to +140°F (60°C)
Normal Operating Temperature Range	+74°F (23°C) to +80°F (27°C)
Recommended Maximum Charging Current Limit	C/5 amperes @ 20 hr rate
Float Charging Voltage	13.5 to 13.8 VDC/unit average at 77°F (25°C)
Equalization and Cycle Service Charging and Current Limits	14.4 to 14.8 VDC/unit average at 77°F (25°C)
Maximum AC Ripple (Charger)	0.5% RMS or 1.5% P-P of float charge voltage recommended for best results Maximum voltage allowed = 4% P-P Maximum current allowed = C/20 RMS
Self Discharge	Up to 6 months at 77°F (25°C) and then a freshening charge is required. Batteries stored at temperatures at greater than +77°F (25°C) will require recharge sooner than batteries stored at temperatures less than 77°F (25°C). See C&D brochure 41-7272, Self Discharge and Inventory Control for details.
Accessories	Rack systems are available for all models
Terminal: Inserted	Threaded copper alloy insert terminal to accept 10-32 UNF x ⅜ in. long screws (SGC 12-30 & SGC 12-45) 1/4-20 UNC x ¾ in. long screws (SGC 12-70, SGC 12-80, SGC 12-90, and SGC 12-125)
Terminal Hardware Torque	25 in.-lbs (2.8 N-m) (SGC 12-30 & SGC 12-45) 110 in.-lbs (12.4 N-m) (SGC 12-70, SGC 12-80, SGC 12-90, and SGC 12-125)

Model	Rated Battery Capacity @ 8 hr rate to 1.75 volts per cell @ 77°F (25°C)	Maximum Discharge Current	Short Circuit Current @ 0.1 sec	Ohms Impedance 60 Hz (Ω)	Weight (lbs)	Weight (kg)
SGC 12-30	30.4 Ah	500 Amps	2150 Amps	0.0100 Ohms	27.3	12.4
SGC 12-45	45.5 Ah	600 Amps	2500 Amps	0.0060 Ohms	40.6	18.4
SGC 12-70	69.1 Ah	800 Amps	3100 Amps	0.0050 Ohms	55.8	25.3
SGC 12-80	79.0 Ah	800 Amps	3300 Amps	0.0040 Ohms	66.6	30.2
SGC 12-90	87.6 Ah	800 Amps	3600 Amps	0.0035 Ohms	74.5	33.8
SGC 12-125	126.0 Ah	800 Amps	5000 Amps	0.0023 Ohms	102.3	46.4

DIMENSIONS

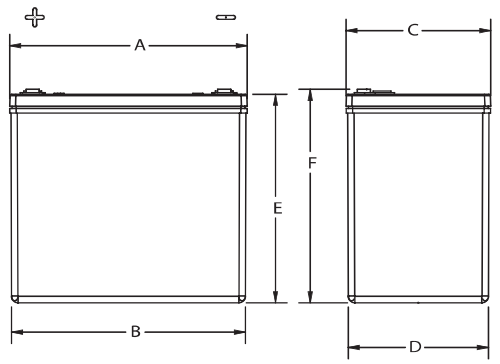

	A	B	C	D	E	F
SGC 12-30	7.77 (197.4)	7.54 (191.4)	5.19 (131.9)	5.02 (127.6)	6.52 (165.7)	6.80 (172.7)
SGC 12-45	8.99 (228.3)	8.86 (225.1)	5.48 (139.2)	5.31 (134.8)	7.89 (200.3)	8.07 (205.1)
SGC 12-70	10.26 (260.5)	10.17 (258.4)	6.83 (168.9)	6.65 (168.9)	7.89 (200.3)	8.01 (203.5)
SGC 12-80	12.04 (305.8)	11.95 (303.5)	6.83 (173.4)	6.65 (168.9)	7.94 (201.6)	8.06 (204.8)
SGC 12-90	13.42 (340.9)	12.75 (323.7)	6.80 (172.7)	6.54 (166.0)	8.40 (213.2)	8.52 (216.4)
SGC 12-125	13.57 (344.7)	12.74 (323.6)	6.80 (172.7)	6.63 (168.4)	10.81 (274.5)	10.93 (277.7)

Battery Termination

SGC 12-30

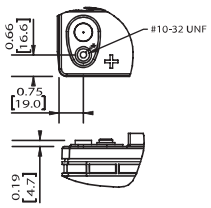

SGC 12-45

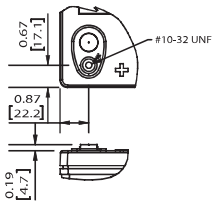

SGC 12-70

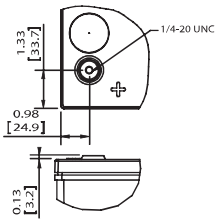

SGC 12-80

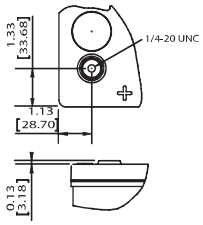

SGC 12-90

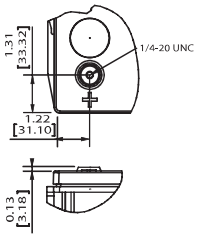

SGC 12-125

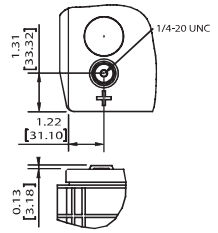

All dimensions in inches and (millimeters). All dimensions are for reference only. Contact a C&D Representative for complete dimension information.

RACK SELECTION MATRIX

For more details:

- See 41-6977, RB Rack Selection Guide
- See 41-6976, RB Rack Assembly Instruction

System DC Voltage	Number of Batteries per System	Use with Battery Model		Use with Battery Model		Number of Tiers Per Rack	Number of Racks To Order per System	Empty slots per system
		SGC 12-30 SGC 12-45	SGC 12-70 SGC 12-80 SGC 12-90 SGC 12-125	SGC 12-30 SGC 12-45	SGC 12-70 SGC 12-80 SGC 12-90 SGC 12-125			
		Non-Seismic (Zone 0) Rack Model		Seismic (Zones 1-4) Rack Model				
48 V (4 Jars)	4	RBN1T	RBW1T	RBN1TEQ	RBW1TEQ	1	1	1
120 V (10 Jars)	10	RBN1T	RBW1T	RBN1TEQ	RBW1TEQ	1	2	0
		RBN2T	RBW2T	RBN2TEQ	RBW2TEQ	2	1	

RATINGS PER CELL

Models	End Point Volts/Cells	Constant Current Discharge Ratings @ 77°F (25°C) Amperes									
		1 min	15 min	30 min	1 hr	2 hr	3 hr	4 hr	5 hr	8 hr	12 hr
SGC 12-30	1.75	137.8	59.3	36.2	22.1	13.0	9.2	7.2	5.8	3.8	2.7
	1.80	128.0	56.2	34.5	21.0	12.4	8.8	6.9	5.6	3.7	2.6
	1.85	116.0	51.5	32.1	19.6	11.6	8.4	6.6	5.4	3.5	2.5
	1.90	104.2	47.9	29.9	18.5	11.1	8.0	6.4	5.2	3.4	2.4
SGC 12-45	1.75	156.0	79.9	51.8	31.5	18.5	13.2	10.3	8.5	5.7	4.0
	1.80	138.0	71.5	47.7	30.0	18.0	13.0	10.0	8.2	5.5	3.9
	1.85	113.4	63.7	43.9	28.0	17.4	12.7	9.9	8.1	5.4	3.8
	1.90	89.6	54.4	39.4	26.2	16.5	12.2	9.5	7.8	5.2	3.6
SGC 12-70	1.75	198.8	117.3	75.7	46.8	27.5	19.8	15.6	12.9	8.6	6.0
	1.80	178.9	108.0	71.0	44.5	26.8	19.2	15.0	12.3	8.4	5.9
	1.85	163.4	100.1	66.3	41.8	25.5	18.3	14.3	11.9	8.1	5.6
	1.90	147.1	89.4	61.2	39.5	24.2	17.3	13.6	11.3	7.7	5.4
SGC 12-80	1.75	302.0	140.0	88.4	53.8	31.5	22.6	17.5	14.5	9.9	6.9
	1.80	264.7	128.6	81.8	51.1	29.8	21.6	17.0	14.0	9.6	6.7
	1.85	212.0	117.2	77.4	47.0	27.5	20.3	16.1	13.4	9.1	6.4
	1.90	172.4	103.8	67.5	43.0	25.4	18.5	15.0	12.5	8.5	5.9
SGC 12-90	1.75	331.1	159.4	102.3	60.0	34.8	25.0	19.8	16.2	11.0	7.8
	1.80	273.7	145.1	92.6	57.0	33.0	24.0	19.0	15.6	10.6	7.6
	1.85	234.6	130.1	85.5	53.3	31.4	22.8	18.0	15.0	10.1	7.2
	1.90	185.9	115.2	78.8	49.5	29.9	21.7	17.1	14.2	9.5	6.7
SGC 12-125	1.75	445.3	221.3	145.2	87.5	49.0	36.0	28.4	23.6	15.8	10.8
	1.80	370.8	202.1	135.3	82.5	47.3	34.7	27.5	22.7	15.2	10.6
	1.85	309.0	186.4	121.7	77.0	44.0	32.5	26.3	21.8	14.5	10.1
	1.90	275.0	172.1	113.4	71.0	41.5	30.7	24.3	20.2	13.4	9.4

LCT II 1700

m·s· endur® II

Liberty 1000

XT SERIES

SAGE ON

C&D TECHNOLOGIES 100 YEARS

DYNASTY

MCT II

A CENTURY OF EXPERIENCE YOU CAN TRUST

From our inception over 100 years ago, C&D Technologies has been a pioneer in the development of energy storage and power conversion systems that enable telecommunications, data transmission, computer system infrastructure and utilities to maintain critical operations during power outages. C&D supplies batteries and power plants to the leading telecommunications companies, from the smallest outside plant and wireless sites to the largest major central office switch facilities preventing loss of traffic and associated revenue. Our batteries and chargers are used in electrical power generation plants and substations for major electric utility companies, preventing damage to expensive infrastructure equipment. C&D batteries are used in large data centers, network operations centers, financial institutions and many other sites that depend on uninterruptible power supplies to maintain power to their critical equipment. To this day, C&D continues to be the industry leader providing the highest quality products, including reliable long lasting batteries for most industrial and commercial standby power applications. Our web site www.cdtechno.com provides product data and contact information for our local representatives and branches, located in over 40 countries. Our continued success is due to many factors including our products, our employees and our sales partners. But mostly, C&D's success is due to the loyalty of our customers, for which we are thankful.

C&D TECHNOLOGIES, INC.

1400 Union Meeting Road
P.O. Box 3053 • Blue Bell, PA 19422-0858
(215) 619-2700 • Fax (215) 619-7899 • (800) 543-8630
customersvc@cdtechno.com
www.cdtechno.com

Any data, descriptions or specifications presented herein are subject to revision by C&D Technologies, Inc. without notice. While such information is believed to be accurate as indicated herein, C&D Technologies, Inc. makes no warranty and hereby disclaims all warranties, express or implied, with regard to the accuracy or completeness of such information. Further, because the product(s) featured herein may be used under conditions beyond its control, C&D Technologies, Inc. hereby disclaims all warranties, either express or implied, concerning the fitness or suitability of such product(s) for any particular use or in any specific application or arising from any course of dealing or usage of trade. The user is solely responsible for determining the suitability of the product(s) featured herein for user's intended purpose and in user's specific application.

Copyright 2008 C&D Technologies, INC. Printed in U.S.A. 12-1007/0808/CD

ISO 9001:2015 CERTIFIED

Model: A77

A77D = Level-1 Filter
A77DE = Level-2 Filter

Microprocessor Controlled SCR Battery Charger

Made in U.S.A

The La Marche Model A77 Series Battery Charger is engineered for the demanding requirements of Switchgear, Process Control, Oil Exploration and other stationary DC power applications. The A77 can automate NERC PRC-005 & TPL-001 Compliance.

Powered by Microprocessor Controlled SCR technology, the A77 Series Battery Charger / Battery Eliminator has ±0.25% DC voltage regulation from no load to full load over the specified input voltage, frequency and ambient temperature ranges.

These chargers are available in DC output voltages of 24, 48, 130, and 260 VDC with DC output currents from 6 amps and above. Consult factory for any special input and output requirements not mentioned above.

The La Marche A77 charger provides value added features such as AC/DC breakers, easy to read LCD display with text readout alarm LED's and form "C" alarm contacts. Communication options are available to remotely monitor and control the charger using DNP3, Modbus, IEC 61850 and SNMP protocols. The SNMP option features easier and faster charger setup and configuration using a web browser.

Designed to meet IEEE-2405 & NEMA PE5, and listed to UL 1012.

Standard Features

- Microprocessor Controlled SCR Technology
- A77D - Level-1 Filter *
- A77DE - Level-2 Filter **
- Automatic AC Voltage Compensation
- AC & DC Surge Protection (MOV)
- AC & DC Breaker
- Float / Equalize Mode Switch
- Digital Float and Equalize Adjustments
- Digital Current Limit Adjustment 50 to 110%
- ±0.25% DC Voltage Regulation
- Battery Continuity Test
- Load Sharing
- Remote Equalize
- LCD Display
  - ✓ DC Voltage and Current
  - ✓ Alarms
- Available for Lithium-Ion Battery configurations
- LED Indicators
  - ✓ Float / Equalize
  - ✓ AC ON
  - ✓ Charger Failure
  - ✓ Overload / Current Limit
  - ✓ End of Discharge
  - ✓ High DC Voltage Shutdown
  - ✓ Positive & Negative Ground Detection
  - ✓ AC Failure
  - ✓ Summary Alarm
  - ✓ Low DC Current
  - ✓ Low DC Voltage
  - ✓ High DC Voltage
- Remote Annunciation Form "C" Contacts
  - ✓ AC Failure
  - ✓ Summary Alarm

  (See Optional Accessories For Additional Alarm Contacts)
- Alarms Latching / Non-Latching
- Equalize Timer - adjustable from 1-255 hours with five selectable modes of operation (manual, automatic every 7, 14 or 30 days and equalize after sensing a low DC voltage)
- Advanced Data Logging (Micro SD)
- UL 1012, CUL, CE, IBC & ABS
- NERC PRC-005 & TPL-001 Compliant
- 5-Year Full Warranty
  10-Year Magnetics Warranty

* Level-1 Filter Equivalent to NEMA PE5 Filtered Output
** Level-2 Filter Equivalent to NEMA PE5 Battery Eliminator Filter

Specifications subject to change without notice

La Marche Mfg. (A U.S. Company)
106 Bradrock Drive, Des Plaines, IL 60018
Tel: 847.299.1188 Fax: 847.299.3061
sales@lamarchemfg.com
www.lamarchemfg.com

P25-DSA77-1
ECN 23600
08/24

Specifications

ELECTRICAL

- **AC Input Operating Range Voltage**
  Voltage range: +10, -12% from nominal
  Frequency range: 60 Hz ±5%
  (50Hz Consult Factory)
- **Single Phase Voltages:**
  120, 208, 240, 480 or 600 VAC
  (Tap selectable 120/208/240 on units up to 25 amp output. All other units must specify single input voltage).
  Consult factory for other voltages.
- **Three Phase Voltages:**
  208, 240, 480 or 600 VAC
  Consult factory for other voltages.
- **DC Output**
  24, 48, 125/130, 250/260VDC
  6 to 500 amps
- **Efficiency***
  Single Phase > 85%
  Three Phase > 90%
  * Based on 125/130VDC output units

- **Output Filtering** (with or without batteries):

	24V	48V	125/130V	250/260V
A77D Level-1 Filter (w/o battery)	240mV (1%)	480mV (1%)	2.6V (2%)	5.2V (2%)
A77D Level-1 Filter (w/battery)	30mV	30mV	100mV*	200mV*
A77DE Level-2 Filter (w/o battery)	30mV	30mV	100mV**	200mV

* Battery AH = 4x the charger's ampacity
** 30mV filtering available as an option

- **DC Voltage Regulation Steady State**
  ± 0.25% of setting from no load to full load over the specified input voltage, frequency and ambient temperature ranges.
- **DC Output Voltage Range**

	Volt		Cells	
	Float	Equalize	Lead Acid	Ni-Cad
24V	23.8-29.5	24-31	11-13L	17-20N
48V	46-57	48-59	22-26L	33-39N
125/130V	115-140	123-147	53-62L	83-93N
250/260V	230-280	246-294	106-124L	166-186N

Consult Factory for other ratings.
Note: Typical cell ranges are based on the following:
Lead Acid 2.17 vpc Float, 2.33 vpc Equalize
NiCad 1.40 vpc Float, 1.55 vpc Equalize
VRLA 2.25 vpc Float, 2.27 vpc Equalize

Front Display Panel

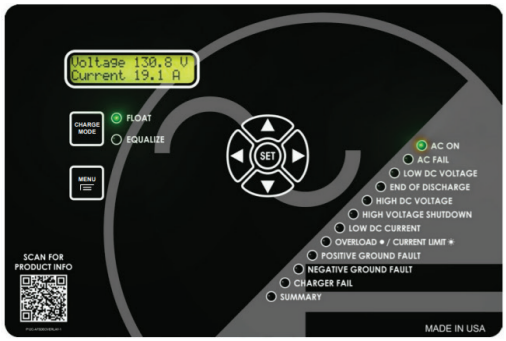

- **Data Logging**
  A77 Battery Charger is equipped with data logging capability on an internal Micro-SD Card. It logs and stores data of Event-Driven and Time-Interval-Driven Events. The charger's data-log file does not need proprietary software to examine the data; it could be viewed and easily formatted with many popular spreadsheet programs.
- **Dynamic Response (On Battery)**
  Voltage transient < ±5% over a step change in the load from 20% to 100%
  Recovery Time < 200 mS
- **Audible Noise**
  Less than 65dBA at any point 5 feet from any vertical surface of the unit.
- **Load Sharing**
  Identical La Marche A77 units, when connected in parallel, are capable of sharing the DC load within ±5% for individual unit outputs greater than 5% of the rated output.

REMOTE MONITORING

- Form "C" Alarm Contacts
- With optional Communications Card:
  - Connect to SCADA System
  - Web Monitoring
  - Alarm / Notification E-mails

PROTECTION

- **Current Walk-in**
  The output current will gradually increase after the charger is turned on, eliminating surges and overshoot.
- **Current Limit**
  Electronic Current-Limiting Control Circuitry provides a digitally adjustable limit from 50 to 110% of the rated output current of the charger, Factory set at 110%.
- **AC Breaker**
  Single Phase units are equipped with a 2-pole circuit breaker. Three Phase units are equipped with a 3-pole circuit breaker.
- **DC Breaker**
  Standard units are equipped with a 2-pole circuit breaker.

ENVIRONMENTAL

- **Operating Temperature**
  0 to 50°C (32 to 122°F)
- **Storage Temperature**
  -40 to 85°C (-40 to 185°F)
- **Relative Humidity**
  0 to 95% (non-condensing)
- **Cooling**
  Convection Cooled
  Note: 600Amp and larger units are fan assisted

ENCLOSURES

- **NEMA Type 1**
  Consult factory for other enclosure ratings.
- **Dimensions**
  Overall dimensions and weight are listed on the last page. When space requirements are critical, please consult the factory. Case specifications are subject to change.
- **Mounting**
  Floor, wall or rack mounting is available; see enclosure specifications on page 4 for details.
- **Finish**
  Pretreated with a seven stage iron phosphate wash, sealer and deionized rinse. Then coated with an environmentally safe and durable ANSI 61 gray Polyester TGIC Minite powder finish.

STANDARDS

- ABS
- IBC*
- CE
- UL/CUL 1012
- EN 55011
- NEMA PE5
- FCC Part 15
- IEEE/ANSI C37. 90.1
- IEC 60255-22-3
- IEC 60950-1
- IEC 61000-4
- IEC 61000-6-4
- IEC 61000-6-2
- IEEE-2405

* Requires an option code

Optional Accessories

01C	2 - Pole High Interrupting Capacity AC Breaker: 65KAIC @ 240 VAC / 35KAIC @ 480 VAC †
01D	2 - Pole High Interrupting Capacity AC Breaker: 100KAIC @ 240 VAC / 65KAIC @ 480 VAC / 25KAIC @ 600 VAC †
01F	3 - Pole High Interrupting Capacity AC Breaker: 65KAIC@ 240 VAC, 25KAIC @ 480VAC, 18KAIC @ 600VAC †
01G	3 - Pole High Interrupting Capacity AC Breaker: 100KAIC @ 240 VAC / 65KAIC @ 480 VAC / 25KAIC @ 600 VAC † † Only available for Breakers Rated 15A & Larger.
19T	AC Breaker Trip on HVSD
19U	Adjustable Ground Detection Sensitivity
19V	AC Voltage & Current Metering (1%)
11F	Special 30mV Filtering
20Q	Equalize Fan Control Relay
434	Reverse Polarity Protection
38D	Copper Ground Bus Bar
11L	Lightning Arrestor
11W	External Probe 24Ft (Adj Temp Comp.)
11Y	External Probe 100Ft (Adj Temp Comp.)
102	Blocking Diode
09V	I.D. Tags - Black text on white background
09W	Heat Shrink Wire Markers with Electrical Schematic
46R	Discrete Alarm Relays • Positive Ground • Low DC Volts • Negative Ground • Low DC Amps • High DC Volts • Battery End of Discharge • Charger Failure • High Voltage Shutdown
17B	12 Pulse Rectification, 5% THD*
57D	Hydrogen Det. HUB, Alarm Interface & Sensor
57H	Hydrogen Det. HUB, Alarm Interface
10Z	Electrolyte Level HUB, Alarm Interface & Sensor
538	IBC Certification Label (consult factory for Anchor Kits)
182	Ventilation Fan Interlock
56E	Compliance to IEC 62477-1:2012 and IEC 61204-7:2016
219	Equipment Over Temperature Alarm

Communication Protocols

21J	IEC 61850 Ethernet
21P	DNP 3.0 Communications RS232/RS485/Ethernet
21Q	Modbus Communications RS232/RS485/Ethernet
21S	Modbus RTU RS232/RS485
21X	SNMP & Web Browser (Ethernet)

* Case size subject to change, consult factory.

A77 Charger Chart

	Model Number	DC Amps	DC Protection DC Breaker/ Rating	Single Phase AC Input Current Draw Amps @ 100% Load (Recommended Feeder AC Supply Breaker)								Enclosure	Shipping Weight** (Approximate)	
				(ABD)120/240/208	(A)120	(D)208	(B)240	Rating	(C)480	Rating	(ZD)600 Rating		lbs	kgs
24 Volt Systems	A77D(E)-12-24V	12	20/10 KAIC	6 / 3 / 3 (10/5/5)	6 (10)	3 (5)	3 (5)	10 KAIC	---	---	--- ---	10	92	42
	A77D(E)-16-24V	16	25/10 KAIC	8 / 4 / 5 (15/10/10)	8 (15)	5 (10)	4 (10)	10 KAIC	---	---	--- ---	10	98	45
	A77D(E)-20-24V	20	30/10 KAIC	10 / 5 / 6 (15/10/10)	10 (15)	6 (10)	5 (10)	10 KAIC	---	---	--- ---	10	100	46
	A77D(E)-25-24V	25	40/10 KAIC	12 / 6 / 7 (20/10/10)	12 (20)	7 (10)	6 (10)	10 KAIC	---	---	--- ---	10	104	48
	A77D(E)-30-24V	30	40/10 KAIC	---	15 (20)	8 (15)	7 (15)	25 KAIC	---	---	--- ---	477	147	67
	A77D(E)-35-24V	35	50/10 KAIC	---	17 (25)	10 (15)	9 (15)	25 KAIC	---	---	--- ---	477	150	69
	A77D(E)-40-24V	40	60/10 KAIC	---	20 (30)	11 (20)	10 (15)	25 KAIC	---	---	--- ---	477	174	79
	A77D(E)-50-24V	50	70/10 KAIC	---	24 (40)	14 (20)	12 (20)	25 KAIC	6 (15)	25 KAIC	--- ---	477	185	84
	A77D(E)-60-24V	60	80/10 KAIC	---	29 (40)	17 (25)	15 (20)	25 KAIC	7 (15)	25 KAIC	6 (15) 18 KAIC	477	208	95
	A77D(E)-75-24V	75	100/10 KAIC	---	37 (50)	21 (30)	18 (30)	25 KAIC	9 (15)	25 KAIC	7 (15) 18 KAIC	977	350	159
	A77D(E)-100-24V	100	150/25 KAIC	---	49 (70)	28 (40)	24 (40)*	25 KAIC	12 (20)	25 KAIC	10 (15) 18 KAIC	72N	385	175
48 Volt Systems	A77D(E)-6-48V	6	15/10 KAIC	6 / 3 / 3 (10/5/5)	6 (10)	3 (5)	3 (5)	10 KAIC	---	---	--- ---	10	84	38
	A77D(E)-12-48V	12	20/10 KAIC	12 / 6 / 7 (20/10/10)	12 (20)	7 (10)	6 (10)	10 KAIC	---	---	--- ---	10	108	49
	A77D(E)-16-48V	16	25/10 KAIC	16 / 8 / 9 (25/15/15)	16 (25)	9 (15)	8 (15)	25 KAIC	---	---	--- ---	477	146	66
	A77D(E)-20-48V	20	30/10 KAIC	20 / 10 / 11 (30/15/20)	20 (30)	11 (20)	10 (15)	25 KAIC	---	---	--- ---	477	158	72
	A77D(E)-25-48V	25	40/10 KAIC	24 / 12 / 14 (35/20/25)	24 (35)	14 (25)	12 (20)	25 KAIC	6 (15)	25 KAIC	--- ---	477	170	73
	A77D(E)-30-48V	30	40/10 KAIC	---	29 (40)	17 (25)	15 (20)	25 KAIC	7 (15)	25 KAIC	6 (15) 18 KAIC	477	190	86
	A77D(E)-35-48V	35	50/10 KAIC	---	34 (50)	20 (30)	17 (25)	25 KAIC	9 (15)	25 KAIC	7 (15) 18 KAIC	477	196	89
	A77D(E)-40-48V	40	60/10 KAIC	---	39 (60)	23 (40)*	20 (30)	25 KAIC	10 (15)	25 KAIC	8 (15) 18 KAIC	477	240	109
	A77D(E)-50-48V	50	70/10 KAIC	---	49 (70)	28 (40)	24 (40)*	25 KAIC	12 (20)	25 KAIC	10 (15) 18 KAIC	477	260	118
	A77D(E)-60-48V	60	80/10 KAIC	---	---	34 (50)	29 (40)	25 KAIC	15 (20)	25 KAIC	12 (20) 18 KAIC	977	300	137
	A77D(E)-75-48V	75	100/10 KAIC	---	---	42 (60)	37 (50)	25 KAIC	18 (25)	25 KAIC	15 (20) 18 KAIC	977	350	159
	A77D(E)-100-48V	100	150/25 KAIC	---	---	56 (90)	49 (70)	25 KAIC	24 (40)*	25 KAIC	20 (30) 18 KAIC	72N	460	209
125/ 130 Volt Systems	A77D(E)-6-130V	6	15/10 KAIC	15 / 7 / 8 (25/10/15)	15 (25)	8 (15)	7 (10)	25 KAIC	---	---	--- ---	477	147	67
	A77D(E)-12-130V	12	20/10 KAIC	29 / 15 / 17 (40/25/25)	29 (40)	17 (25)	15 (25)	25 KAIC	7 (15)	25 KAIC	6 (15) 18 KAIC	477	185	84
	A77D(E)-16-130V	16	25/10 KAIC	39 / 20 / 23 (60/30/40*)	39 (60)	23 (40)*	20 (30)	25 KAIC	10 (15)	25 KAIC	8 (15) 18 KAIC	477	212	96
	A77D(E)-20-130V	20	30/10 KAIC	49 / 24 / 28 (70/35/40)	49 (70)	28 (40)*	24 (40)*	25 KAIC	12 (20)	25 KAIC	10 (15) 18 KAIC	477	235	107
	A77D(E)-25-130V	25	40/10 KAIC	61 / 31 / 35 (90/50/50)	61 (90)	35 (50)	31 (50)	25 KAIC	15 (20)	25 KAIC	12 (20) 18 KAIC	477	255	116
	A77D(E)-30-130V	30	40/10 KAIC	---	---	42 (60)	37 (50)	25 KAIC	18 (25)	25 KAIC	15 (20) 18 KAIC	477	300	137
	A77D(E)-35-130V	35	50/10 KAIC	---	---	49 (70)	43 (60)	25 KAIC	21 (30)	25 KAIC	17 (25) 18 KAIC	977	375	171
	A77D(E)-40-130V	40	60/10 KAIC	---	---	56 (80)	49 (70)	25 KAIC	24 (40)*	25 KAIC	20 (30) 18 KAIC	977	422	192
	A77D(E)-50-130V	50	70/10 KAIC	---	---	70 (100)	61 (90)	25 KAIC	31 (50)	25 KAIC	24 (40)* 18 KAIC	977	480	218
	A77D(E)-75-130V	75	100/10 KAIC	---	---	---	92 (125)	25 KAIC	46 (70)	25 KAIC	37 (50) 18 KAIC	72N	735	334

	Model Number	DC Amps	DC Protection DC Breaker/ Rating	Three Phase AC Input Current Draw Amps @ 100% Load (Recommended Feeder AC Supply Breaker)							Enclosure	Shipping Weight** (Approximate)	
				(D) 208	(B) 240	Rating	(C) 480	Rating	(ZD) 600	Rating		lbs	kgs
24 Volt Systems	A77D(E)-75-24V	75	100/10 KAIC	11 (15)	9 (15)	25 KAIC	---	---	---	---	977	330	150
	A77D(E)-100-24V	100	150/25 KAIC	14 (20)	12 (20)	25 KAIC	6 (15)	25 KAIC	---	---	72N	475	215
	A77D(E)-125-24V	125	175/25 KAIC	18 (25)	16 (25)	25 KAIC	8 (15)	25 KAIC	6 (15)	18 KAIC	72N	530	240
	A77D(E)-150-24V	150	225/25 KAIC	22 (30)	19 (30)	25 KAIC	9 (15)	25 KAIC	7 (15)	18 KAIC	72N	600	272
	A77D(E)-200-24V	200	300/25 KAIC	29 (40)	25 (40)*	25 KAIC	12 (20)	25 KAIC	10 (15)	18 KAIC	72N	675	306
	A77D(E)-250-24V	250	375/25 KAIC	36 (50)	31 (50)	25 KAIC	16 (25)	25 KAIC	12 (20)	18 KAIC	46N	800	363
	A77D(E)-300-24V	300	400/25 KAIC	43 (60)	37 (60)	25 KAIC	19 (30)	25 KAIC	15 (25)	18 KAIC	46N	875	398
	A77D(E)-400-24V	400	600/35 KAIC	58 (80)	50 (70)	25 KAIC	25 (40)*	25 KAIC	20 (30)	18 KAIC	47N	1050	477
48 Volt Systems	A77D(E)-50-48V	50	70/10 KAIC	14 (20)	12 (20)	25 KAIC	6 (15)	25 KAIC	---	---	977	317	144
	A77D(E)-75-48V	75	100/10 KAIC	22 (30)	19 (30)	25 KAIC	9 (15)	25 KAIC	7 (15)	18 KAIC	977	374	170
	A77D(E)-100-48V	100	150/25 KAIC	29 (40)	25 (40)*	25 KAIC	12 (20)	25 KAIC	10 (15)	18 KAIC	72N	600	272
	A77D(E)-125-48V	125	175/25 KAIC	36 (50)	31 (50)	25 KAIC	16 (25)	25 KAIC	12 (20)	18 KAIC	72N	680	308
	A77D(E)-150-48V	150	225/25 KAIC	43 (60)	37 (60)	25 KAIC	19 (30)	25 KAIC	15 (25)	18 KAIC	72N	700	318
	A77D(E)-200-48V	200	300/25 KAIC	58 (80)	50 (70)	25 KAIC	25 (40)*	25 KAIC	20 (30)	18 KAIC	46N	755	342
	A77D(E)-250-48V	250	375/25 KAIC	72 (100)	62 (90)	25 KAIC	31 (50)	25 KAIC	25 (40)*	18 KAIC	46N	800	363
	A77D(E)-300-48V	300	400/25 KAIC	86 (125)	75 (100)	25 KAIC	37 (60)	25 KAIC	30 (50)	18 KAIC	47N	900	408
	A77D(E)-400-48V	400	600/35 KAIC	115 (175)	100 (150)	25 KAIC	50 (70)	25 KAIC	40 (60)	18 KAIC	47N	1200	544
125/ 130 Volt Systems	A77D(E)-25-130V	25	40/10 KAIC	18 (30)	16 (25)	25 KAIC	8 (15)	25 KAIC	6 (15)	18 KAIC	977	305	138
	A77D(E)-30-130V	30	40/10 KAIC	22 (30)	19 (30)	25 KAIC	9 (15)	25 KAIC	7 (15)	18 KAIC	977	315	143
	A77D(E)-35-130V	35	50/10 KAIC	25 (40)*	22 (30)	25 KAIC	11 (15)	25 KAIC	9 (15)	18 KAIC	977	330	150
	A77D(E)-40-130V	40	60/10 KAIC	29 (40)	25 (40)*	25 KAIC	12 (20)	25 KAIC	10 (15)	18 KAIC	977	335	161
	A77D(E)-50-130V	50	70/10 KAIC	36 (50)	31 (50)	25 KAIC	16 (25)	25 KAIC	12 (20)	18 KAIC	977	410	186
	A77D(E)-75-130V	75	100/10 KAIC	54 (80)	47 (70)	25 KAIC	23 (40)*	25 KAIC	19 (30)	18 KAIC	72N	660	299
	A77D(E)-100-130V	100	150/25 KAIC	72 (100)	62 (90)	25 KAIC	31 (50)	25 KAIC	25 (40)*	18 KAIC	72N	750	340
	A77D(E)-125-130V	125	175/25 KAIC	90 (125)	78 (125)	25 KAIC	39 (60)	25 KAIC	31 (50)	18 KAIC	46N	850	385
	A77D(E)-150-130V	150	225/25 KAIC	108 (150)	94 (125)	25 KAIC	47 (70)	25 KAIC	37 (60)	18 KAIC	46N	1067	484
	A77D(E)-200-130V	200	300/25 KAIC	144 (200)	125 (175)	25 KAIC	62 (90)	25 KAIC	50 (70)	18 KAIC	46N	1200	544
	A77D(E)-250-130V	250	375/25 KAIC	180 (250)	156 (225)	25 KAIC	78 (125)	25 KAIC	62 (90)	18 KAIC	47N	2000	907
	A77D(E)-300-130V	300	400/25 KAIC	216 (300)	187 (300)	65 KAIC	94 (150)	25 KAIC	75 (100)	18 KAIC	47N	2028	920
	A77D(E)-400-130V	400	600/35 KAIC	288 (400)	250 (350)	65 KAIC	125 (175)	25 KAIC	100 (150)	18 KAIC	57N	2500	1134
	A77D(E)-500-130V†	500	700/35 KAIC	---	---	---	156 (225)	25 KAIC	125 (175)	18 KAIC	57N	3645	1653
	A77D(E)-600-130V†	600	1000/35 KAIC	---	---	---	172 (250)	25 KAIC	---	---	57N	3750	1701
	A77D(E)-800-130V†	800	1200/35 KAIC	---	---	---	230 (350)	35 KAIC	---	---	57N	4200	1905

Note: Case size subject to change without notice

* May also use 35A feeder breaker; **Consult Factory for optional export crating weight; †UL Pending

A77 Charger Chart

	Model Number	DC Amps	DC Protection DC Breaker/ Rating	Three Phase AC Input Current Draw Amps @ 100% Load (Recommended Feeder AC Supply Breaker)							Enclosure	Shipping Weight** (Approximate)	
				(D)208	(B)240	Rating	(C)480	Rating	(ZD)600	Rating		lbs	kgs
250/260 Volt Systems	A77D(E)-25-260V†	25	40/25 KAIC	36 (50)	31 (50)	25 KAIC	16 (25)	25 KAIC	13 (20)	18 KAIC	72N	600	272
	A77D(E)-50-260V†	50	70/25 KAIC	72 (100)	62 (90)	25 KAIC	31 (50)	25 KAIC	26 (40)	18 KAIC	72N	700	317
	A77D(E)-75-260V†	75	100/25 KAIC	108 (150)	94 (125)	25 KAIC	47 (70)	25 KAIC	39 (60)	18 KAIC	46N	900	408
	A77D(E)-100-260V†	100	150/25 KAIC	144 (200)	125 (175)	25 KAIC	62 (90)	25 KAIC	50 (70)	18 KAIC	47N	1800	816
	A77D(E)-150-260V†	150	225/25 KAIC	---	187 (250)	25 KAIC	94 (150)	25 KAIC	75 (100)	18 KAIC	47N	2200	998
	A77D(E)-200-260V†	200	300/25 KAIC	---	---	25 KAIC	125 (175)	25 KAIC	100 (150)	18 KAIC	57N	3000	1360

Note: Case size subject to change without notice
**Consult Factory for optional export crating weight
† UL Pending

Enclosure Specifications

Enclosure	Overall Dimensions						Cable Entry		Standard Mounting	Optional Mounting Kits	
	Width		Depth		Height						
	in	mm	in	mm	in	mm	AC Input	DC Input		Rack	Floor
10	19	483	15.1	384	12.2	310	RIGHT TOP / BOTTOM	LEFT TOP / BOTTOM	WALL	19" / 23"	✓
477	19	483	15.6	396	23.6*	602*	RIGHT TOP / BOTTOM	LEFT TOP / BOTTOM	WALL/FLOOR	19" / 23"	STD
977	20.5	521	15.8	403	37.8	962	RIGHT TOP / BOTTOM	LEFT TOP / BOTTOM	FLOOR	23"	STD
72N	27	686	24.4	621	43.6	1109	RIGHT TOP / BOTTOM	LEFT TOP / BOTTOM	FLOOR	---	---
46N	30	762	20	508	66	1676	RIGHT TOP / BOTTOM	LEFT TOP / BOTTOM	FLOOR	---	---
47N	35.4	899	33.4	848	67.5	1715	RIGHT TOP / BOTTOM	LEFT TOP / BOTTOM	FLOOR	---	---
57N	60	1524	30	763	77	1962	RIGHT TOP / BOTTOM	LEFT TOP / BOTTOM	FLOOR	---	---

*Floor mounting brackets add 2" (51mm) to overall height. Case sizes may differ depending on optional accessories.
Consult factory when dimensions are critical. Detailed dimensional drawings are available for mounting purposes.

Model Number Nomenclature

A77 (DE) - 25 - 130V - (ABD) 1 - (60L) - ( )

- A77 — Model Number
- (DE) — Ripple Filter Code
- 25 — DC Amps
- 130V — DC Volts
- (ABD) — AC Voltage Code
- 1 — AC Phase Code
- (60L) — Battery Cell Type Code
- ( ) — Factory Assigned Accessory Code

Configuration as Shown: Level-2 Filtered Charger with 25ADC/130VDC Output, for 60 Lead Acid Cells, with a 120/240/208VAC Single-Phase Input.

AC Voltage Codes

ABD - 120/240/208
A - 120
D - 208
L - 220
Q - 230
BL - 240/220
B - 240
G - 380
ZA - 400
J - 415
K - 440
C - 480
ZD - 600

DC Voltage Codes

24VDC Nominal; Use 24V
48VDC Nominal; Use 48V

For 125VDC or 130VDC Nominal; Use 130V in the Part Number
For 250VDC or 260VDC Nominal; Use 260V in the Part Number

AC Phase Codes

1 - Single Phase
3 - Three Phase

Ripple Filter Codes

D = Level-1
DE = Level-2

Battery Cell Type Code

11L 12L 13L 22L 23L 24L 25L 26L 53L 54L 55L 56L 57L 58L 59L 60L 61L 62L 110L 115L 116L 120L
17N 18N 19N 20N 33N 34N 35N 36N 37N 38N 39N 83N 84N 85N 86N 87N 88N 89N 90N 91N 92N 93N

L = Lead Acid
N = Nickel Cadmium
LR = VRLA
LON = Lithium Ion
SOD = Sodium

Ordering Information

When ordering, please specify:

- La Marche Model Number A77D/A77DE
- DC Amps
- DC Volts
- Special Frequency, When Required
- AC Voltage Code
- AC Phase Code
- Battery Cell Type Code
- Optional Accessories (Option Code)

Battery Charger Sizing Guidelines

- Required Battery Backup Time (Hours)
- DC Output Voltage
- Ampere Hour Capacity of Battery
- Allowable Recharge Time From Full Discharge (Hours), Where Applicable
- Continuous and Intermittent DC Loads and Duration (Amps)

C&D TECHNOLOGIES, INC.
1400 UNION MEETING ROAD
BLUE BELL, PA 19422
(215) 619-2700
FAX: (215) 619-7840

C&D Battery Model

69.1 AH @ 8 hr rate to 1.75 volts per cell @ 77 F (25 C)

Model:	**SGC 12-70**
Product Line:	**SGC Series**
Type:	VRLA 10 year
Grid Type:	Lead Calcium
Specific Gravity:	1.300
No. Cells / Jar:	6
Part Number:	n/a
No. Plates:	70
***Float vpc:**	2.28 volts per cell
***Equalize vpc:**	2.43 volts per cell
	* Nominal values only, see Installation and Operations Manual for details

Key Calculations

Based on the Following Parameters:

Model:	**SGC 12-70**
Number of Cells:	**1**
Cell Voltage:	**2.28 volts per cell**
Temperature:	**77 °F**

Battery String Information:

***Float:**	2.28 vDC	Nominal Float
***Equalize:**	2.43 vDC	Nominal Equalize
vDC as Entered:	2.28 vDC	Based on User Provided Cell Voltage
Number of Cells:	1	
Number of Jars:	1	
Battery Weight:	55.80 lbs	

Hydrogen Evolution:

at Volts per Cell:	2.43	
	Hydrogen generation calculation based on worst case Boost/Equalize charge mode in accordance with IEEE 1635-2012 Table 2.	
Per Cell:	0.000091 cu. ft. H_2 / Hour	
Per String:	0.000091 cu. ft. H_2 / Hour	(1 cells in the string)
at Temperature:	77 °F	

Electrolyte & Composition Calculations:

	Per Cell	**Per String**

Electrolyte Volume:	0.20 gal	0 gal
Electrolyte Weight:	1.80 lbs	2 lbs
Lead Weight:	6.90 lbs	7 lbs
H2SO4 Weight (%):	0.70 lbs	1 lbs
	Electrolyte quantities given are approximate values designed to meet or exceed known reporting requirements of applicable health and safety codes.	

Cell Resistance & Short Circuit:		
Short Circuit Current:	3100 max. amps.	Calculated Short Circuit Current in Amperes
Cell Resistance:	0.000645 ohms.	Resistance expressed in ohms, for Cell + 1 Connector
Cell Resistance:	0.000645 ohms.	Re

Jar Information	
Width:	6.83 in.
Length:	10.26 in.
Height:	8.01 in.
Cover:	FR polypropylene
Standard Jar:	FR polypropylene
Optional Jar:	n/a
Safety Vent:	Flame-arresting, one-way pressure-relief vent for safety and long life.
Terminals:	Threaded copper alloy insert terminal

Weight Information **	
Jar:	55.80 lbs
Dom. Pack:	n/a
	** - Does not include module or rack weight

Plate Information	
Plate Height:	n/a
Plate Width:	n/a
Electrolyte Height:	n/a
Sediment Height:	n/a
Positive Thickness:	n/a
Negative Thickness:	n/a
Outside Neg. Thickness:	n/a
Separator:	n/a

Features

Thermally welded case-to-cover bond to ensure for hermetic, leak free seal.
Molded in terminal bushing for durability and leak free seal.
Thick positive grids and superior grid alloy for improved high temperature performance and longer life.
UL recognized component.
Complies with UL 1778, UL924,UL1989 and UL94 V-0.
Multicell design for ease of installation and maintenance.

Applications

This model is suitable for numerous applications and deployments. Listed below are standard applications, however, applications engineering should always review specific requirements prior to deployment.

Switchgear & Control - General Purpose: An application in which, characteristically, both high and low currents are required for various durations. Duty cycles (sequence and duration of current loads over support time) are typically 1 minute to 8 hours in duration.

Product Line

PRODUCT LINE: Valve Regulated Lead Acid (VRLA) Battery Series for Switchgear and Control Applications

Other Battery Models For This Product Line

SGC 12-30
SGC 12-45
SGC 12-70
SGC 12-80
SGC 12-90
SGC 12-125

Wednesday, April 24, 2019
©2014 C&D Technologies, Inc. www.cdtechno.com
All critical calculations must be verified with C&D Applications
Specifications are subject to change without notice

NOTICE: THIS DRAWING AND THE INFORMATION DISCLOSED ON IT ARE CONFIDENTIAL AND PROPRIETARY TO C&D TECHNOLOGIES, INC. AND MAY NOT BE DUPLICATED, REPRODUCED, USED OR DISCLOSED BY OR TO ANY PERSON OR PARTY OUTSIDE OF THE COMPANY IN ANY WAY WITHOUT THE WRITTEN PERMISSION OF A DULY AUTHORIZED EMPLOYEE OF THE COMPANY. Copyright © 2004

120 VOLT SYSTEM
150A, 250A, 400A
SGC12-70

APPROX. TOTAL SYSTEM WEIGHT: 635 LBS. [288.0 kg]
(INCLUDES RACKS, BATTERIES, & CABLE KIT)

FLOOR CONTACT AREA: 20.25 SQ. IN. [13,064.5 mm²]
(NON-SEISMIC RACK)

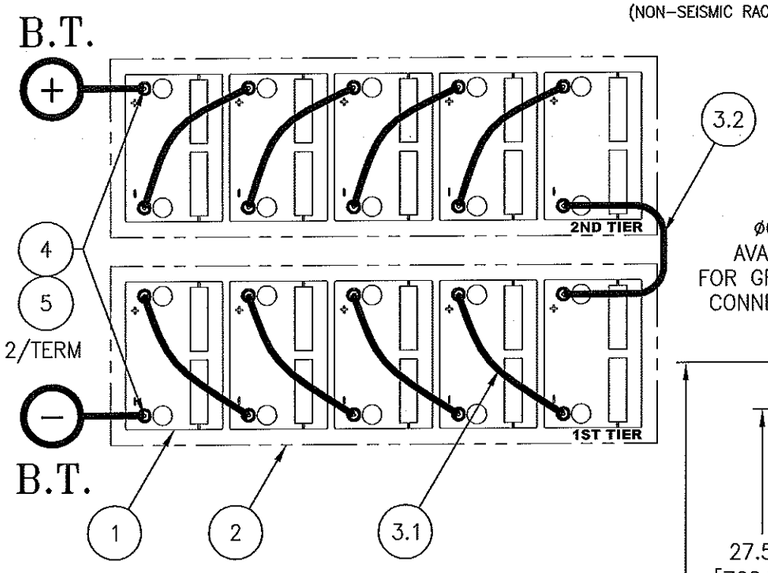

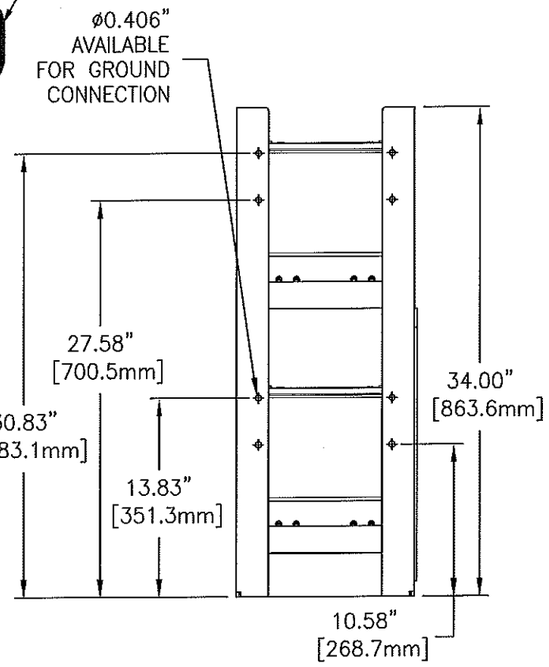

ELEVATION VIEW

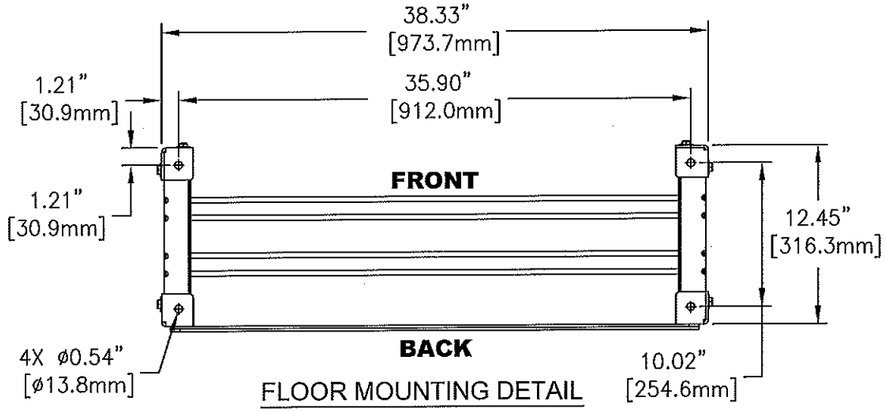

FLOOR MOUNTING DETAIL
SEE NOTE 9

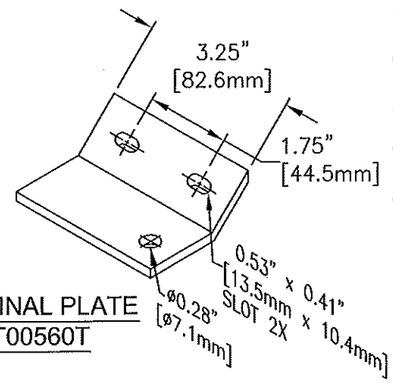

TERMINAL PLATE
PT00560T

ITEM	QTY	PART NO.	DESCRIPTION	DRAWING
1	10	30046775	**BATTERY – SGC12–70 (CARTON)** EACH BATTERY INCLUDES HARDWARE KIT (30035672): (2) SCR, HEX 1/4–20 X 3/4" (2) LOCK WASHER 1/4" (2) FLAT WASHER 1/4"	94B038
2	1	RD05166BD–2T	**2–TIER RACK, NON–SEISMIC**	N03599
3	1	RE05380BD–150	**150 AMP CABLE KIT**	N03601
		(3.1)	(8) INTER–UNIT CONN. #2 CABLE 10"	
		(3.2)	(1) INTER–TIER CONN. #2 CABLE 30"	
	1	RE05380BD–250	**250 AMP CABLE KIT**	N03601
		(3.1)	(8) INTER–UNIT CONN. 1/0 CABLE 10"	
		(3.2)	(1) INTER–TIER CONN. 1/0 CABLE 30"	
	1	RE05380BD–400	**400 AMP CABLE KIT**	N03601
		(3.1)	(8) INTER–UNIT CONN. 4/0 CABLE 10"	
		(3.2)	(1) INTER–TIER CONN. 4/0 CABLE 30"	
OPTIONAL ITEMS				
4	2	PT00560T	TERMINAL PLATE	K07695
5	4	PB00390	BOLT ASSY, 5/16–18 X 1.00" LG S.S.	M09179
6	20	PH04300	TAB WASHER	–

NOTES:

1. FLOOR MOUNTING (ANCHOR) BOLTS ARE NOT FURNISHED.
2. INSTALLATION ANCHOR BOLT SIZE & TYPE ARE TO BE DETERMINED BY USER IN ACCORDANCE WITH BUILDING CODES APPLICABLE TO THE ARRANGEMENT DESCRIBED ON THIS DRAWING.
3. REFERENCE DRAWING M16285 FOR ADDITIONAL RACK INSTALLATION DETAILS.
4. THIS BATTERY STRING CONSISTS OF (10) SGC12–70 UNITS.
5. THE AMPERE RATING OF THE CABLES IS SPECIFIED IN THE BILL OF MATERIALS. DISCONNECTS SHOULD BE SIZED ACCORDINGLY.
6. AMPERE RATING OF THE CABLES IS BASED ON THE ALLOWABLE AMPACITIES OF SINGLE INSULATED CONDUCTORS, PER NEC TABLE 310.15 (B)(17).
7. ALLOW 4.00" SPACING BETWEEN RACKS AND ANY FACILITY STRUCTURE.
8. THE BATTERY OUTPUT CABLES AND RACK GROUNDING CABLES ARE TO BE SUPPLIED BY THE INSTALLATION CONTRACTOR.
9. FOR OVERALL DIMENSIONS ADD AN ADDITIONAL 0.6" TO LENGTH AND WIDTH TO INCLUDE BRACE AND BOLT HEADS.

ECN13761

REVISION HISTORY

ZONE	REV	DESCRIPTION	ECN#	REV'D	CHK'D	DATE	APPROVED

UNLESS OTHERWISE SPECIFIED DIMENSIONS ARE IN INCHES & TOLERANCES ON: DECIMALS X .XX .XXX ANGLES ±
THIRD ANGLE PROJECTION
MATERIAL SEE BOM ABOVE
PER: SPEC:

DRAWN Y. HODGES 10/29/13
CHECKED 11/20/13
APPROVED
APPROVED
FILE: N03601BDA

ALL SHEETS ARE THE SAME REVISION STATUS

C&D TECHNOLOGIES, INC.
1400 UNION MEETING, BLUE BELL, PA 19422-0588
www.cdtechno.com

TITLE
CONNECTION DIAGRAM 120VDC
(10) SGC12-70, NON-SEISMIC 2-TIER RACK

SIZE D | CAGE CODE | DRAWING NUMBER N03601BD | REVISION 0
SCALE NTS | SHEET 1 OF 2

12/2000

C&D TECHNOLOGIES, INC.
200 PRECISION DRIVE
HORSHAM, PENNSYLVANIA 19044
(215) 619-2700
FAX: (215) 619-7840

Step Load Detail Analysis

Project:
Company:
Ref:

Date: 06/26/2025
Sized By: Sam Wilson
IEEE Std: IEEE485-2020

Lowest Design Temperature
60.00 °F

Minimum Design Cell Voltage
1.75

Sizing Basis Plate Nomenclature
SGC Series

Load Period	Load (amperes)	Change in Load (amperes) + Values	- Values	Duration of Load Period Period (minutes)	Time to End of Section (minutes)	Capacity Amperese per Pos. Plate	Required Section Cell Size Pos. Plates	+ Values	- Values
Section 1									
1	46.25	46.25		1	1	198.18	0.233		
						Section 1 Total	0.233		
Section 2									
1	46.25	46.25		1	240	15.54	2.976		
2	4.25		42.00	239	239	15.59			2.693
						Section 2 Total	0.283		
Section 3									
1	46.25	46.25		1	241	15.49	2.987		
2	4.25		42.00	239	240	15.54			2.703
3	46.25	42.00		1	1	198.18	0.212		
						Section 3 Total	0.496		

Section 4								
1	46.25	46.25		1	480	8.61	5.374	
2	4.25		42.00	239	479	8.62		4.871
3	46.25	42.00		1	240	15.54	2.703	
4	4.25		42.00	239	239	15.59		2.693
						Section 4 Total	0.512	

Maximum Section Size	0.51	**+ Random Load Size**	0.00	**= Base Design Size**	0.51		
				x Temperature Correction	1.10		
				x Design Margin	1.1		
				x Aging Factor	1.25		
				= Required Size	0.78		
				(Must be <= 1.00)			
Required Size	1	**Strings Per System**	1	**Cell Model**	SGC 12-70		
				Cells Per Jar	6		

Thursday, June 26, 2025

©2024 C&D Technologies, Inc. www.cdtechno.com
All critical calculations must be verified with C&D Applications
Specifications are subject to change without notice

Beech Part # GW-2006

Beech Engineering & Manufacturing
Division of Miller Studio Inc.
MADE IN THE U. S. A.

Model GW-2006 Winch Lift Truck

1000 pound capacity

Lift height of over 100" at full capacity

Safety Swivel Hook is attached directly to extension boom

For ease of movement, oversize roller bearing phenolic 5" diameter x 2" wide load wheels and 4" diameter x 2" wide steering casters are standard

Each machine is factory proof tested to 150% capacity

2 Year warranty on entire machine, 5 years on frame weldment

Made in the USA

PO Box 947 • NewPhiladelphia, Ohio 44663-5245 • Phone 1-800-726-9491 • Fax 330-343-3037
www.beechengineering.com

Beech Part # GW-2006

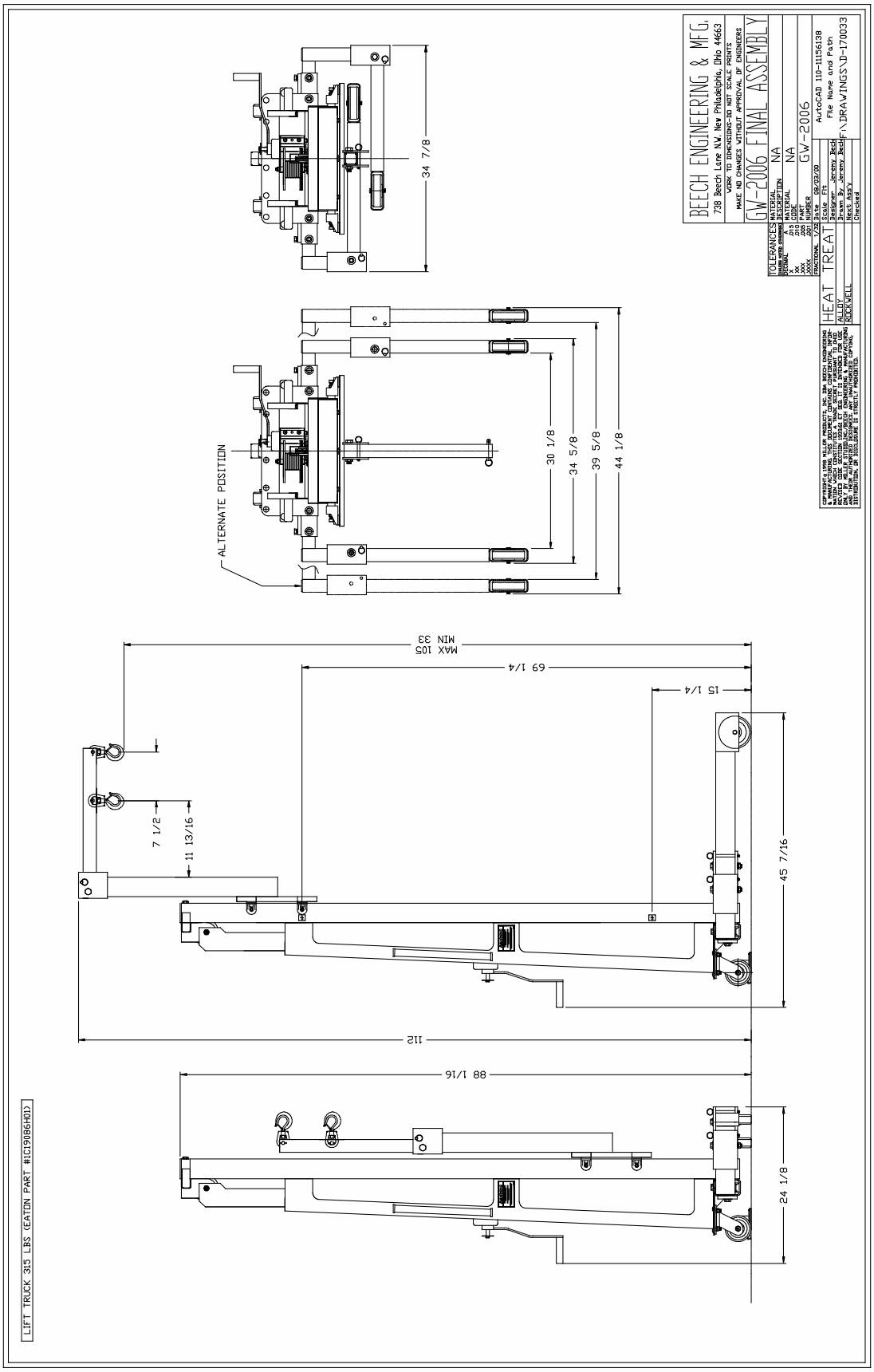

Bitroncis Part # MTWDN7CDM500RXB02

Bitronics® PowerPlex II

The PowerPlex II (PPX II) is a new Automation Transducer built in the same package as the original PowerPlex, or with digital I/O added, in the M571 case. It is an Ethernet transducer with fast, 1-cycle updates that can be used in SCADA automation schemes and in synchronizing applications in conjunction with PLCs. It is an excellent choice as a replacement for the Bitronics M571 in non-recording applications. Two sets of three-phase voltages that allow direct connect for 600V ac systems are provided.

The PowerPlex II transducers are simple to set up and use, and provide the following features:

Communications
- No need for PC software – Ethernet service port provides access to web server in the instrument so meters can be interfaced with just a web browser for viewing and configuration
- Ethernet protocol support for DNP3, Modbus TCP, or IEC 61850
- Built-in Ethernet switch allows pass-through from one device to another
- An option for both standard secondary “optimal resolution” or primary units makes communications with SCADA/RTU more flexible
- Optional display port and IRIG-B port
- Optional configurable RS-232/RS-485 serial port

Measurements
- Full basic measurement set with demand and harmonic values plus phase angle, voltage differential and slip frequency used in synchronizing applications
- 0.2% revenue accuracy
- .001Hz accuracy
- Updates every 1 cycle

Built for the Substation
- Wide-range universal power supply
- Rugged aluminum case
- Reduce inventory cost as one model covers all wiring options
- Easy to mount with compact transducer footprint

Applications
- Synchronizing, voltage control, power factor control, and load shedding
- Digital front-end to SCADA systems
- Intelligent Electronic Device (IED) interfacing to RTUs and PLCs
- Plant equipment, line, power & energy monitoring
- Breaker status, rack-in, rack-out in switchgear

Environmental
- Operating temperature range -40° to 70°C, storage temperature -40° to 85°C
- Humidity 0-95% non-condensing
- Surge withstand to ANSI/IEEE C37.90.1: 2002
- UL/CSA Recognized, File Number E164178, CE Marked

NovaTech

Specifications
Dimensions:
Standard chassis: 5.28” H x 5.60” W x 5.63” D – overall depth including handle is 5.75” D (134mm H x 142mm W x 143mm D – overall depth including handle is 146mm D).
Wide chassis (with I/O and serial port): 5.2” H x 8.5” W x 5.9” D (132mm H x 216mm W x 150mm D).
Weight:
Standard chassis: 2.3 lbs. (1.04 kg)
Wide chassis (with I/O and serial port: 3.5 lbs. (1.59 kg)
Power Supply: 12 – 40V dc nominal, intended to connect to 12 and 24V batteries or 48-250V dc/55-240V ac with built in monitoring
Current Inputs: 5A nominal to maximum of 10A (2x overload)
Voltage Inputs: 600V ac nominal, 45-65Hz
Outputs: Dual RJ45 10BaseT/100BaseTX ports (Ethernet switch) for service port functions, Modbus or DNP3 TCP/IP support; IEC 61850 support optional display and IRIG-B ports
Digital Inputs: Optional 4 or 8; High speed, suitable for 1ms SOE
- Nominal Input Range: 24V dc to 250V dc
- Threshold Voltage: 15V dc +/-1V or 80V dc +/-5V (at 25C)
- Input Resistance: 33kohm
- Input De-bounce Time: Selectable, from 1 ms to 2 s

Digital Outputs: Optional 4
- Tripping duty relay
- Resistive: 30A
- Continuous Carry: 5A
- Break Inductive @48V dc: 700mA
- Break Inductive @125V dc: 200mA
- Output Operate Time (time from command by Host, does not include protocol delays):
  - Assert (Close time with “N.O.” jumper): 8ms
  - Release (Open time with “N.O.” jumper): 3ms

Isolation: I/O Terminals to Case: 2000Vac, 1 min. I/O Terminals to Channel: 2000Vac, 1 min (channel 4 to other channels).

IP Address Identity Tool
The PPX II supports the Inverse Address Recognition Protocol (InARP), a software utility program that requests the IP address for a specific MAC address on an Ethernet network and can also scan for a range of MAC addresses and print the IP address for any devices which respond.

Bitroncis Part # MTWDN7CDM500RXB02

Available Measurements	
Available Measurements	PPX II
Amps A, B, C, Residual	x
Average 3-Phase Amps	x
Average 3-Phase Volts (1& 2)	x
Average Volts AN, BN, CN, AB, BC, CA (Bus 1)	x
Average (Max.) Volts AN, BN, CN, AB, BC, CA (Bus 1)	x
Average (Min.) Volts AN, BN, CN, AB, BC, CA (Bus 1)	x
Average Watts A, B, C, Total	x
Average (Max.) Watts A, B, C, Total	x
Average (Min.) Watts A, B, C, Total	x
Average VARs A, B, C, Total	x
Average (Max.) VARs A, B, C, Total	x
Average (Min.) VARs A, B, C, Total	x
Average VAs A, B, C, Total	x
Average (Max.) VAs A, B, C, Total	x
Average (Min.) VAs A, B, C, Total	x
Class 0 Response Setup	x
CT Scale Factor	x
CT Scale Factor Divisor	x
Demand (Max.) Amps A, B, C, Residual	x
Demand (Max.) Fund. Amps A, B, C, Residual	x
Demand Amps A, B, C, Residual	x
Demand Fundamental Amps A, B, C, Residual	x
Displacement Power Factor A, B, C	x
Displacement Power Factor Total	x
Factory Version Hardware	x
Factory Version Software	x
Frequency (System)	x
Frequency Volts A, B, C (1 & 2)	x
Fund. Amps A, B, C, Residual	x
Fund. Volts AN, BN, CN, AB, BC, CA (1 & 2)	x
Health	x
Heartbeat	x
K-factor Amps A, B, C, Residual	x
Meter Type	x
Phase Angle Amps A, B, C	x
Phase Angle Volts A, B, C	x
Phase Angle Volts AB, BC, CA	x
Phase Angle Volts A 1-2, B 1-2, C 1-2	x

Available Measurements	
Power Factor A, B, C, Total	x
Protocol Version	x
PT Scale Factor	x
PT Scale Factor Divisor	x
Slip Frequency Volts A 1-2, B 1-2, C 1-2	x
Symmetrical Components Bus 1 & 2 Volts (Magnitude and Angle)	x
Symmetrical Components Current (Magnitude and Angle)	x
Tag Register	x
TDD Amps A, B, C, Residual	x
TDD Denominator A, B, C	x
THD Volts AN, BN, CN, AB, BC, CA	x
Unbalance Amps	x
Unbalance Volts (1 & 2)	x
Uncompensated VARs, Total	x
Uncompensated Watts, Total	x
VA-Hrs	x
VAR-Hrs Lag	x
VAR-Hrs Lead	x
VARs A, B, C, Total	x
VAs A, B, C, Total	x
Volts AN, BN, CN, AB, BC, CA (1 and 2)	x
Volts Aux1-Aux2	x
Watt-Hrs Net	x
Watt-Hrs Normal	x
Watt-Hrs Reverse	x
Watts A, B, C, Total	x

The PowerPlex II Tethered Display (PPXIITD) provides local or detached indication of measured values.

PowerPlex II with added I/O and serial port in M571 case.

NovaTech

novatechweb.com

Copyright © 2016 NovaTech, LLC. All rights reserved. All brand and product names mentioned in this document are trademarks of their respective owners. NovaTech and Bitronics are registered trademarks of NovaTech, LLC. The information in this literature is subject to change without notice and is not to be construed as a warranty.
DS_PowerPlexII_080316

Dynics Part # BTXEDBFBEE24EA3EBXX-ISO
CAT Part # COMP-TSP-E-05

BTXE | INDUSTRIAL COMPUTER

The DYNICS BTXE is the ideal solution for industries requiring robust computing power in a compact form factor. A compact, rugged industrial PC, the BTXE is designed to meet the demands of modern industrial applications. Equipped with a 24VDC power supply and powered by the 12th Gen Intel® Core™ i5 processor, this microcomputer delivers exceptional performance and reliability. Various video outputs and upgrades are available, making the BTXE ideal for diverse industrial applications.

- Orderable Part Number: BTXEDBFBEE24EA3EBXX-ISO
- Ships RAID Ready
- Powder Coat Color: CAT Yellow
- Side and Back Mounting Brackets Included
- 1x PCIe x16 Slot
- 2x 2.5" Removable Drive Tray

PC SPECIFICATIONS

COMPUTER I/O	Intel® Q670E
1Gb Ethernet Port (Supporting Intel® AMT)	1x
2.5Gb Ethernet Port	1x
RS232 Ports	1x
USB 3.2 Gen1 Ports	2x
USB 3.2 Gen2 Ports	3x
USB 2.0 Ports	2x
USB-C 3.2 Gen2 Ports	1x
DisplayPort v1.4a	2x
Audio Jacks	2x
CPU / CPU SPEED	12th Gen Intel® Core™ i5-12500TE Up to 4.3GHz, 18MB Cache (6 cores, 12 threads)
MEMORY	16GB DDR5
EXPANSION SLOTS	1x PCIe x16 Slot
STORAGE	256GB 2.5" SATA Solid-State Drive SATA (Boot Drive)
OPERATING SYSTEM	Windows® 11 Enterprise IoT LTSC 2024 (64-bit)
POWER SUPPLY	24VDC Power Entry, 3-Pin Quick Disconnect
TEMPERATURE	Operating: 0°-50°C | 32°-122°F
	Non-Operating: -25°-60°C | -13°-140°F
RELATIVE HUMIDITY	Non-Condensing: 20% - 80%
SHOCK RESISTANCE	Operating: 10G
	Non-Operating: 15G
VIBRATION	Operating: 1.0G from 57~2000Hz
	Non-Operating: 2.5G from 57~2000Hz
INCLUDED	1x Panel Mounting Bracket, Side and Back 1x 3-Pin Quick Disconnect 1x 10Ft Cable DisplayPort to DisplayPort (Male-to-Male)
COMPLIANCE	USA: UL Listed, UL 61010-1+UL 61010-2-201, FCC 47CFR Part 15 Class A Canada: cUL Listed, CSA C22.2 No. 61010-1-12+CSA C22.2 No. 61010-2-201, ICES-001, Class A EU: RoHS Directive 2011/65/EU, EN 50581
WARRANTY	60-Month limited warranty, contact DYNICS for more details.

RoHS COMPLIANT · MADE IN THE USA · intel INSIDE · Windows 11

620 TECHNOLOGY DRIVE, ANN ARBOR, MI 48108 | PH: 734.677.6100 | SALES@DYNICS.COM | WWW.DYNICS.COM

Dynics Part # BTXEDBFBEE24EA3EBXX-ISO
CAT Part # COMP-TSP-E-05

DYNICS

INDUSTRIAL COMPUTER MODULE

CAT

BTXEDBFBEE24A3EBXX-ISO

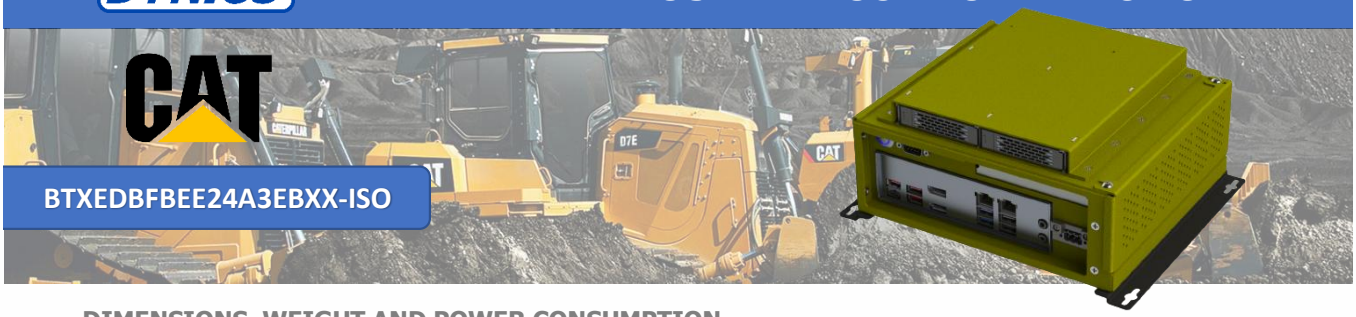

DIMENSIONS, WEIGHT AND POWER CONSUMPTION

	HEIGHT	WIDTH	DEPTH	WEIGHT	POWER CONSUMPTION
BTXE	4.2″ (105.6mm)	9.0″ (228.6mm)	8.2″ (207.0mm)	8 lbs.* (3.6 Kgs).*	92 Watts**

* Weights are approximate, contact DYNICS for details.
** Power consumption is based on maximum ratings; actual ratings vary significantly based on components used.

MECHANICAL DRAWINGS

FRONT VIEW

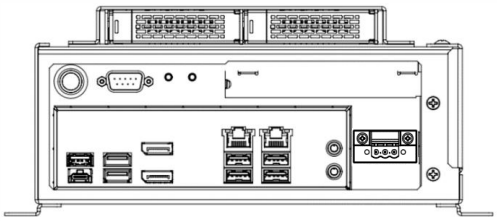

SIDE VIEWS

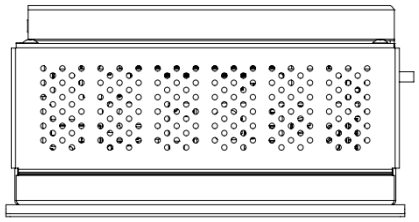

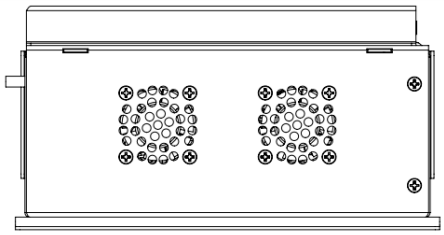

TOP VIEW

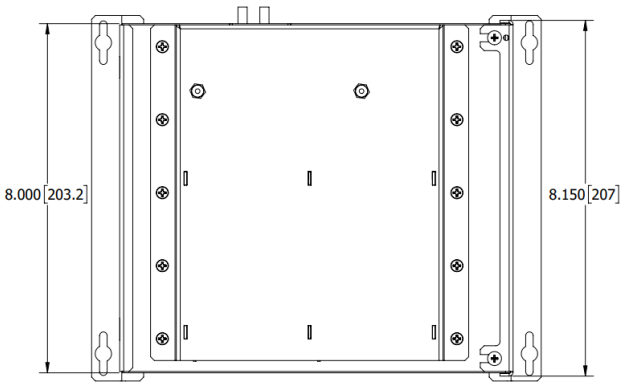

ISO VIEW

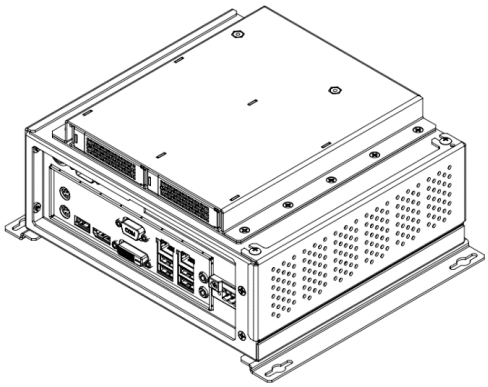

POWER ENTRY

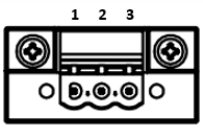

PIN 1: V+
PIN 2: ⏚ (Chassis Ground)
PIN 3: V–

All measurements are in inches and pounds, unless noted. Pictures and drawings are not to scale. Estimated weight may change depending on options.
DYNICS Reserves the right to change, modify, upgrade, or discontinue any part of this datasheet without any prior notice.

620 TECHNOLOGY DRIVE, ANN ARBOR, MI 48108 | PH: 734.677.6100 | SALES@DYNICS.COM | WWW.DYNICS.COM

Non-Illuminated Momentary Pushbutton Units

UL (NEMA) Type 3, 3R, 4, 4X, 12, 13

Flush Button

Pushbutton Units—Flush

Contact Type	Button Color	Flush Button Catalog Number
1NO	Black	**10250T23B**
	Red	**10250T23R**
	Green	**10250T23G**
	Yellow	**10250T23Y**
	Red—Engraved EMERG. STOP	—
1NC	Black	**10250T101-51**
	Red	**10250T102-51**
	Green	**10250T103-51**
	Yellow	**10250T104-51**
	Red—Engraved EMERG. STOP	—
1NO-1NC	Black	**10250T30B**
	Red	**10250T30R**
	Green	**10250T30G**
	Yellow	**10250T30Y**
	Red—Engraved EMERG. STOP	—
2NO	Black	**10250T101-2**
	Red	**10250T102-2**
	Green	**10250T103-2**
	Yellow	**10250T104-2**
	Red—Engraved EMERG. STOP	—
2NC	Black	**10250T101-3**
	Red	**10250T102-3**
	Green	**10250T103-3**
	Yellow	**10250T104-3**
	Red—Engraved EMERG. STOP	—

Note

① Anodized aluminum head is not suitable for use in ultraviolet light applications.

Indicating Light Units ①

UL (NEMA) Type 3, 3R, 4, 4X, 12, 13

- LED or incandescent
- Full voltage, resistor or transformer type
- Standard and PresTest types
- Plastic lenses

PresTest—This device incorporates a press-to-test feature whereby depressing the lens disconnects the light from the source being monitored and connects the lamp to a continuously energized circuit for immediate detection of faulty lamps.

24V Full Voltage Illuminated Light

120 Vac Transformer PresTest

Indicating Light Units

Type	Voltage	Color	LED/Lamp Number	Indicating Light Catalog Number	PresTest Catalog Number
LED Lamp					
Full voltage	24 Vac/Vdc	Red	Bayonet base	**10250T197LRP24**	**10250T297LRP24**
		Green		**10250T197LGP24**	**10250T297LGP24**
		Amber		**10250T197LAP24**	**10250T297LAP24**
		Yellow		**10250T197LYP24**	**10250T297LYP24**
		Blue		**10250T197LLP24**	**10250T297LLP24**
		White		**10250T197LWP24**	**10250T297LWP24**
	120 Vac	Red		**10250T197LRP2A**	**10250T297LRP2A**
		Green		**10250T197LGP2A**	**10250T297LGP2A**
		Amber		**10250T197LAP2A**	**10250T297LAP2A**
		Yellow		**10250T197LYP2A**	**10250T297LYP2A**
		Blue		**10250T197LLP2A**	**10250T297LLP2A**
		White		**10250T197LWP2A**	**10250T297LWP2A**
Transformer	120 Vac	Red		**10250T181LRP06**	**10250T221LRP06**
		Green		**10250T181LGP06**	**10250T221LGP06**
		Amber		**10250T181LAP06**	**10250T221LAP06**
		Yellow		**10250T181LYP06**	**10250T221LYP06**
		Blue		**10250T181LLP06**	**10250T221LLP06**
		White		**10250T181LWP06**	**10250T221LWP06**
Incandescent Lamp					
Full voltage	24 Vac/Vdc	Red	#757	**10250T206NC1N**	**10250T235NC21**
		Green		**10250T206NC2N**	**10250T235NC22**
		Amber		**10250T206NC19N**	**10250T235NC43**
		Yellow		**10250T206NC3N**	**10250T235NC23**
		Blue		**10250T206NC4N**	**10250T235NC24**
		Clear		**10250T206NC5N**	**10250T235NC25**
		White		**10250T206NC6N**	**10250T235NC26**
Resistor	120 Vac/Vdc	Red	120MB	**10250T201NC1N**	**10250T231NC21**
		Green		**10250T201NC2N**	**10250T231NC22**
		Amber		**10250T201NC19N**	**10250T231NC43**
		Yellow		**10250T201NC3N**	**10250T231NC23**
		Blue		**10250T201NC4N**	**10250T231NC24**
		Clear		**10250T201NC5N**	**10250T231NC25**
		White		**10250T201NC6N**	**10250T231NC26**
Transformer ②	120 Vac	Red	#755	**10250T34R**	**10250T74NR**
		Green		**10250T34G**	**10250T74NG**
		Amber		**10250T34A**	**10250T74NA**
		Yellow		**10250T34Y**	**10250T74NY**
		Blue		**10250T34B**	**10250T74NB**
		Clear		**10250T34C**	**10250T74NC**
		White		**10250T34W**	**10250T74NW**

Notes

① Standard indicating lights are rated UL (NEMA) 3S as well.

② For flashing lamp add letter **F** to listed catalog number. Example: 10250T34R**F**.

Indicating Light Units ①

UL (NEMA) Type 3, 3R, 4, 4X, 12, 13

- LED or incandescent
- Full voltage, resistor or transformer type
- Standard and PresTest types
- Plastic lenses

PresTest—This device incorporates a press-to-test feature whereby depressing the lens disconnects the light from the source being monitored and connects the lamp to a continuously energized circuit for immediate detection of faulty lamps.

24V Full Voltage Illuminated Light

120 Vac Transformer PresTest

Indicating Light Units

Type	Voltage	Color	LED/Lamp Number	Indicating Light Catalog Number	PresTest Catalog Number
LED Lamp					
Full voltage	24 Vac/Vdc	Red	Bayonet base	**10250T197LRP24**	**10250T297LRP24**
		Green		**10250T197LGP24**	**10250T297LGP24**
		Amber		**10250T197LAP24**	**10250T297LAP24**
		Yellow		**10250T197LYP24**	**10250T297LYP24**
		Blue		**10250T197LLP24**	**10250T297LLP24**
		White		**10250T197LWP24**	**10250T297LWP24**
	120 Vac	Red		**10250T197LRP2A**	**10250T297LRP2A**
		Green		**10250T197LGP2A**	**10250T297LGP2A**
		Amber		**10250T197LAP2A**	**10250T297LAP2A**
		Yellow		**10250T197LYP2A**	**10250T297LYP2A**
		Blue		**10250T197LLP2A**	**10250T297LLP2A**
		White		**10250T197LWP2A**	**10250T297LWP2A**
Transformer	120 Vac	Red		**10250T181LRP06**	**10250T221LRP06**
		Green		**10250T181LGP06**	**10250T221LGP06**
		Amber		**10250T181LAP06**	**10250T221LAP06**
		Yellow		**10250T181LYP06**	**10250T221LYP06**
		Blue		**10250T181LLP06**	**10250T221LLP06**
		White		**10250T181LWP06**	**10250T221LWP06**
Incandescent Lamp					
Full voltage	24 Vac/Vdc	Red	#757	**10250T206NC1N**	**10250T235NC21**
		Green		**10250T206NC2N**	**10250T235NC22**
		Amber		**10250T206NC19N**	**10250T235NC43**
		Yellow		**10250T206NC3N**	**10250T235NC23**
		Blue		**10250T206NC4N**	**10250T235NC24**
		Clear		**10250T206NC5N**	**10250T235NC25**
		White		**10250T206NC6N**	**10250T235NC26**
Resistor	120 Vac/Vdc	Red	120MB	**10250T201NC1N**	**10250T231NC21**
		Green		**10250T201NC2N**	**10250T231NC22**
		Amber		**10250T201NC19N**	**10250T231NC43**
		Yellow		**10250T201NC3N**	**10250T231NC23**
		Blue		**10250T201NC4N**	**10250T231NC24**
		Clear		**10250T201NC5N**	**10250T231NC25**
		White		**10250T201NC6N**	**10250T231NC26**
Transformer ②	120 Vac	Red	#755	**10250T34R**	**10250T74NR**
		Green		**10250T34G**	**10250T74NG**
		Amber		**10250T34A**	**10250T74NA**
		Yellow		**10250T34Y**	**10250T74NY**
		Blue		**10250T34B**	**10250T74NB**
		Clear		**10250T34C**	**10250T74NC**
		White		**10250T34W**	**10250T74NW**

Notes

① Standard indicating lights are rated UL (NEMA) 3S as well.

② For flashing lamp add letter **F** to listed catalog number. Example: 10250T34R**F**.

Illuminated Push-Pull Units

UL (NEMA) Type 3, 3R, 4, 4X, 12, 13

- LED or incandescent
- Full voltage, resistor or transformer type
- Two-position maintained

Two-Position Push-Pull Operator

Two-Position Illuminated Maintained Push, Maintained Pull

Operator Position ①

Maintained—Pull	Maintained—Push	Lamp	Type	Voltage	Contact Type	Mounting Location A	Mounting Location B	LED/Lamp Number	Red Standard Push-Pull Catalog Number ②
0 X	X 0	LED	Full Voltage	24 Vac/Vdc	1NO			Bayonet base	**10250T597LRD24-1X**
				120 Vac/Vdc	1NC				**10250T597LRD2A-1X**
			Transformer	24 Vac					**10250T589LRD06-1X**
				120 Vac					**10250T563LRD06-1X**
0 X	X 0	Incandescent	Full voltage	24 Vac/Vdc	1NO			#757	**10250T579C47-1X**
			Resistor	120 Vac/Vdc	1NC			120MB	**10250T580C47-1X**
			Transformer	24 Vac				#755	**10250T589C47-1X**
				120 Vac					**10250T563C47-1X**

10250ED137_

Jumbo Lens Illuminated E-Stops

Lamp	Button Type/Color	Type	Voltage	Contact Type	Catalog Number
LED	Two-position illuminated maintained push/pull—50 mm jumbo lens/red	Full voltage	24 Vac/Vdc	1NO 1NC	**10250ED1375**
LED	Three-position illuminated momentary push/pull—50 mm jumbo lens/red	Full voltage	24 Vac/Vdc	1NC 1NC	**10250ED1376**
LED	Three-position illuminated momentary push/pull—50 mm jumbo lens/red	Full voltage	24 Vac/Vdc	1NO 1NC	**10250ED1377**
LED	Three-position illuminated maintained push/momentary pull—50 mm lens/red	Full voltage		1NO 1NC	**10250ED1378**

Notes

① X = closed circuit, 0 = open circuit.

② To order different type or color lens, substitute the underlined characters with appropriate suffix code from table on next page. Example: 10250T579**C63**-1X.
For LEDs with different voltages see ordering example on **Page V7-T1-235**.

1.9 Pushbuttons and Indicating Lights

30.5 mm Heavy-Duty Watertight/Oiltight—10250T

1 UL (NEMA) Type 3, 3R, 4, 4X, 12, 13

Lens and Color Selection

	Color	Incandescent Suffix Code	LED Suffix Code	Catalog Number
Standard	**Standard—40 mm**			
	Red	**C47**	**RD**	**10250TC47**
	Red (EMERG. STOP)	**C53**	**ED**	**10250TC53**
	Green	**C48**	**GD**	**10250TC48**
	Blue	**C49**	**LD**	**10250TC49**
	Amber	**C50**	**AD**	**10250TC50**
	White	**C51**	**WD**	**10250TC51**
	Clear	**C52**	**CD**	**10250TC52**
Side-Lighted Aluminum	**Side-Lighted Aluminum—40 mm** ①			
	Red	**C57**	**RS**	**10250TC57**
	Red (EMERG. STOP)	**C63**	**ES**	**10250TC63**
	Green	**C58**	**GS**	**10250TC58**
	Blue	**C59**	**LS**	**10250TC59**
	Amber	**C64**	**AS**	**10250TC64**
	Yellow	**C60**	**YS**	**10250TC60**
	White	**C61**	**WS**	**10250TC61**
	Clear	**C62**	**CS**	**10250TC62**
Aluminum Transparent Center	**Aluminum Transparent Center—40 mm** ①			
	Red	**C65**	**RH**	**10250TC65**
	Green	**C66**	**GH**	**10250TC66**
	Amber	**C67**	**AH**	**10250TC67**
Jumbo Lens	**Jumbo Lens—50 mm**			
	Red	—	—	**10250TC77**

Note

① Clear anodized aluminum and colored lens.

Eaton Part # FAZ-C15/2-NA-DC

UL 489 DIN rail branch circuit breakers

FAZ-NA circuit breakers

PRODUCT SELECTION

FAZ-NA-DC product selection

- UL approved (UL 489) and CSA Certified (CSA C22.2 No.5-02) as Branch Circuit Breakers
- Interrupting capacity: 10 kA at 125 Vdc UL/CSA, 10 kA at 250 Vdc
- 125 Vdc for one-pole, 250 Vdc for two-pole in series
- Current limiting device
- Polarity (+/–) sensitive and not for use on photovoltaic string application
- UL file number E235139

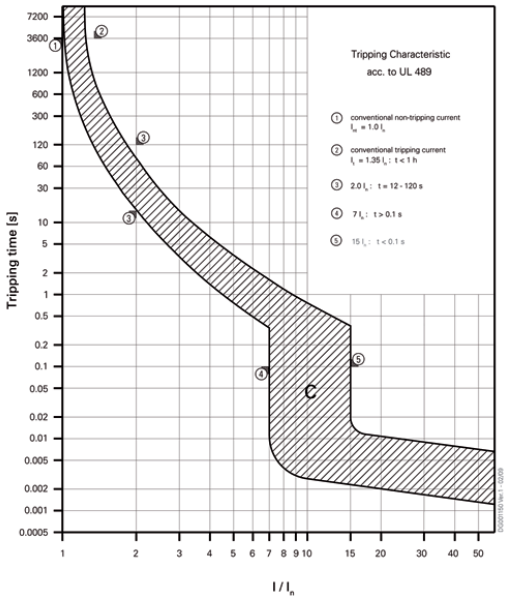

FAZ-NA-DC UL 489 Circuit Breakers—
10 kAIC at 125 Vdc per pole

Amperes	Single-pole ① Catalog Number	Two-pole Catalog Number
C Curve (5–10X I_n Current Rating)		
2	FAZ-C2/1-NA-DC-SP	FAZ-C2/2-NA-DC
3	FAZ-C3/1-NA-DC-SP	FAZ-C3/2-NA-DC
4	FAZ-C4/1-NA-DC-SP	FAZ-C4/2-NA-DC
5	FAZ-C5/1-NA-DC-SP	FAZ-C5/2-NA-DC
6	FAZ-C6/1-NA-DC-SP	FAZ-C6/2-NA-DC
7	FAZ-C7/1-NA-DC-SP	FAZ-C7/2-NA-DC
8	FAZ-C8/1-NA-DC-SP	FAZ-C8/2-NA-DC
10	FAZ-C10/1-NA-DC-SP	FAZ-C10/2-NA-DC
13	FAZ-C13/1-NA-DC-SP	FAZ-C13/2-NA-DC
15	FAZ-C15/1-NA-DC-SP	FAZ-C15/2-NA-DC
16	FAZ-C16/1-NA-DC-SP	FAZ-C16/2-NA-DC
20	FAZ-C20/1-NA-DC-SP	FAZ-C20/2-NA-DC
25	FAZ-C25/1-NA-DC-SP	FAZ-C25/2-NA-DC
30	FAZ-C30/1-NA-DC-SP	FAZ-C30/2-NA-DC
32	FAZ-C32/1-NA-DC-SP	FAZ-C32/2-NA-DC
35	FAZ-C35/1-NA-DC-SP	FAZ-C35/2-NA-DC
40	FAZ-C40/1-NA-DC-SP	FAZ-C40/2-NA-DC

① Option for single packaging on single-pole C curves only; add suffix SP when ordering.

Eaton Part # FAZ-C20/1-NA
Eaton Part # FAZ-C40/1-NA

1.4 Miniature Circuit Breakers

xEffect

FAZ-...-NA Miniature Circuit Breakers

SG53012

SG56812

Characteristic C

1-pole

Rated current I_n (A)	Rated voltage acc. to IEC/EN 60947-2 (V)	Breaking capacity acc. to IEC/EN 60947-2 (kA)	Rated voltage acc. to UL489 (V)	Breaking capacity acc. to UL489 (kA)	SWD	NFPA 79	Type Designation	Article No.	Units per package
0.5	254	15	277	10	SWD	AWG 18	FAZ-C0,5/1-NA	102077	2/80
1	254	15	277	10	SWD	AWG 18	FAZ-C1/1-NA	102078	2/80
1.5	254	15	277	10	SWD	AWG 18	FAZ-C1,5/1-NA	102079	2/80
2	254	15	277	10	SWD	AWG 18	FAZ-C2/1-NA	102080	2/80
3	254	15	277	10	SWD	AWG 18	FAZ-C3/1-NA	102081	2/80
4	254	15	277	10	SWD	AWG 18	FAZ-C4/1-NA	102082	2/80
5	254	15	277	10	SWD	AWG 18	FAZ-C5/1-NA	102083	2/80
6	254	15	277	10	SWD	AWG 18	FAZ-C6/1-NA	102084	2/80
7	254	15	277	10	SWD	AWG 18	FAZ-C7/1-NA	102085	2/80
8	254	15	277	10	SWD	AWG 16	FAZ-C8/1-NA	102086	2/80
10	254	15	277	10	SWD	AWG 16	FAZ-C10/1-NA	102087	2/80
13	254	15	277	10	SWD		FAZ-C13/1-NA	102088	2/80
15	254	15	277	14	SWD		FAZ-C15/1-NA	102089	2/80
16	254	15	277	14	SWD		FAZ-C16/1-NA	102090	2/80
20	254	15	277	14	SWD		FAZ-C20/1-NA	102091	2/80
25	254	15	277	14			FAZ-C25/1-NA	102092	2/80
30	254	15	277	10			FAZ-C30/1-NA	102093	2/80
32	254	15	277	10			FAZ-C32/1-NA	102094	2/80
35	254	15	240	10			FAZ-C35/1-NA	102095	2/80
40	254	15	240	10			FAZ-C40/1-NA	102096	2/80
50	240	15	240	10			FAZ-C50/1-NA	190781	2/80
63	240	15	240	10			FAZ-C63/1-NA	190782	2/80

2-poles

0.5	440	15	480Y/277	10	SWD	AWG 18	FAZ-C0,5/2-NA	102157	1/40
1	440	15	480Y/277	10	SWD	AWG 18	FAZ-C1/2-NA	102158	1/40
1.5	440	15	480Y/277	10	SWD	AWG 18	FAZ-C1,5/2-NA	102159	1/40
2	440	15	480Y/277	10	SWD	AWG 18	FAZ-C2/2-NA	102160	1/40
3	440	15	480Y/277	10	SWD	AWG 18	FAZ-C3/2-NA	102161	1/40
4	440	15	480Y/277	10	SWD	AWG 18	FAZ-C4/2-NA	102162	1/40
5	440	15	480Y/277	10	SWD	AWG 18	FAZ-C5/2-NA	102163	1/40
6	440	15	480Y/277	10	SWD	AWG 18	FAZ-C6/2-NA	102164	1/40
7	440	15	480Y/277	10	SWD	AWG 18	FAZ-C7/2-NA	102165	1/40
8	440	15	480Y/277	10	SWD	AWG 16	FAZ-C8/2-NA	102166	1/40
10	440	15	480Y/277	10	SWD	AWG 16	FAZ-C10/2-NA	102167	1/40
13	440	15	480Y/277	10	SWD		FAZ-C13/2-NA	102168	1/40
15	440	15	480Y/277	14	SWD		FAZ-C15/2-NA	102169	1/40
16	440	15	480Y/277	14	SWD		FAZ-C16/2-NA	102170	1/40
20	440	15	480Y/277	14	SWD		FAZ-C20/2-NA	102171	1/40
25	440	15	480Y/277	14			FAZ-C25/2-NA	102172	1/40
30	440	15	480Y/277	10			FAZ-C30/2-NA	102173	1/40
32	440	15	480Y/277	10			FAZ-C32/2-NA	102174	1/40
35	440	15	240	10			FAZ-C35/2-NA	102175	1/40
40	440	15	240	10			FAZ-C40/2-NA	102176	1/40
50	415	15	240	10			FAZ-C50/2-NA	190785	1/40
63	415	15	240	10			FAZ-C63/2-NA	190786	1/40

1.14 Miniature Circuit Breakers

FAZ-...-NA, -RT - Technical Data

xEffect

Miniature Circuit Breakers FAZ-...-NA, -RT

Accessories:		
Auxiliary switch for subsequent installation	Z-IHK-NA	113895
Tripping signal contact for subsequent installation	Z-NHK	248434
Shunt trip release	FAZ-XAA-NA12-110V AC	102037
	FAZ-XAA-NA110-415V AC	102036
Switching interlock	Z-IS/SPE-1TE	274418

Technical Data IEC/EN

		FAZ-...-NA, -RT
Productstandard		IEC/EN 60947-2
Classified according to		IEC 61373, EN 45545-2
Current test marks as printed onto the device		
Number of poles		1, 2, 3, 4
Mechanical		
Device width		17.7 mm (1-pole), 35.4 mm (2-poles), 53.1 mm (3-poles), 70.8 mm (4-poles)
Frame size		45 mm
Device height		105 mm
Device depth		60 mm
Terminals		lift terminal / ring-tongue
Terminal capacity rigid solid/stranded wire		1-25 mm^2
Terminal screw		M5 (with slotted screw Pozidriv PZ2)
Fastening torque of terminal screws		max. 2.4 Nm
Degree of protection (DIN VDE 0470)		
Surface mounted		IP20
Built-in behind panel		IP40
Contact position indicator		red / green
Electrical		
Rated voltage	U_n	Only characteristic B, C (up to 40 A): 254/440 V AC For characteristic B, C (50 and 63 A) and characteristic D: 240/415 V AC
Rated current	I_n	0.5, 1, 1.5, 2, 3, 4, 5, 6, 7, 8, 10, 13, 15, 16, 20, 25, 30, 32, 35, 40, 50, 63 A
Rated insulation voltage	U_i	440 V AC
Rated impulse withstand voltage	U_{imp}	4 kV (1.2/50) µsec
Tripping characteristic		
Conventional non-tripping current		$I_{nt} = 1.05\ I_n$
Conventional tripping current		$I_t = 1.30\ I_n$
Reference temperature		30 °C
Temperature factor		0.5%/K
Instantaneous tripping current	I_{mt}	Type B: $3\ I_n < I_{mt} = 5\ I_n$:t (I_{mt}) < 0.1 sec Type C: $5\ I_n < I_{mt} = 10\ I_n$:t ($I_{mt}$) < 0.1 sec Type D: $10\ I_n < I_{mt} = 20\ I_n$:t ($I_{mt}$) < 0.1 sec
Rated short-circuit breaking capacity	I_{cu}	15 kA
Service short circuit capacity	I_{cs}	7.5 kA
Selectivity class		3 (acc. to EN 60898)
Number of electrical operations		> 1,500
Number of mechanical operations		> 10,000
Climatic conditions		acc. to IEC 60068-2-30 (25..55°C / 90..95% RH)
Operating temperature range		-40°C up to +75°C
Storage- and transport temperature		-40°C up to +75°C
Operating utility frequency		50/60 Hz

Connection diagram

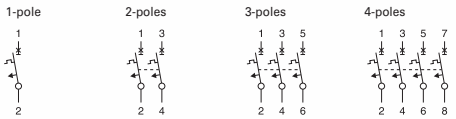

Technical Data UL

		FAZ-...-NA, -RT
Productstandard		UL 489, CSA C22.2 No. 5-02
Number of poles		1, 2, 3, 4
Mechanical		
Device width		0.697 in. (1-pole), 1.394 in. (2-poles), 2.090 in. (3-poles), 2.788 in. (4-poles)
Frame size		1.772 in.
Device height		4.134 in.
Device depth		2.362 in.
Terminals		lift terminal / ring-tongue
Terminal capacity rigid solid/stranded wire		1 Wire: #18-6 AWG (Cu only) 2 Wires: #18-10 AWG (Cu only)
Terminal screw		M5 (with slotted screw Pozidriv PZ2)
Fastening torque of terminal screws		#18-12 AWG: 2.4 Nm (21 lb-in) #10-8 AWG: 2.8 Nm (25 lb-in) #6 AWG: 4 Nm (36 lb-in)
Contact position indicator		red / green
Electrical		
Rated voltage	U_n	0.5-32 A: 480Y/277 V AC, 35-63 A: 240 V AC
Rated current	I_n	0.5, 1, 1.5, 2, 3, 4, 5, 6, 7, 8, 10, 13, 15, 16, 20, 25, 30, 32, 35, 40, 50 (not D), 63 (not D) A
Tripping characteristic		
Conventional non-tripping current		$I_{nt} = 1{,}00\ I_n$
Conventional tripping current		$I_t = 1.35\ I_n$
Reference temperature		25 °C
Temperature factor		0.5%/K
Instantaneous tripping current	I_{mt}	Type B: $3\ I_n < I_{mt} = 5\ I_n$:t (I_{mt}) < 0.1 sec Type C: $5\ I_n < I_{mt} = 10\ I_n$:t ($I_{mt}$) < 0.1 sec Type D: $10\ I_n < I_{mt} = 20\ I_n$:t ($I_{mt}$) < 0.1 sec
Current interrupting rating		
10 kA		B0.5-13A, B30-63A, C0.5-13A, C30-63A, D0.5-10A, D25-40A
14 kA		B15-25A, C15-25A, D13-20A
Current-Limiting		
High interrupt current at 240 V / 10 kA		$I^2t = 42\ kA^2s$ and $I_{peak} = 6.2$ kA
Intermediate interrupt current at 240 V / 5 kA		$I^2t = 24\ kA^2s$ and $I_{peak} = 4.2$ kA
Threshold current at 240 V / 2.6 kA		$I^2t = 18\ kA^2s$ and $I_{peak} = 2.9$ kA
High interrupt current at 480Y/277V / 10 kA		$I^2t = 60\ kA^2s$ and $I_{peak} = 6.2$ kA
High interrupt current at 480Y/277V / 14 kA		$I^2t = 65\ kA^2s$ and $I_{peak} = 7.5$ kA
Intermediate interrupt current at 480Y/277V / 5 kA		$I^2t = 36\ kA^2s$ and $I_{peak} = 4.6$ kA
Threshold current at 480Y/277V / 2.08 kA		$I^2t = 15\ kA^2s$ and $I_{peak} = 2.2$ kA
Selectivity class		3 (acc. to EN 60898)
Number of electrical operations		6,000
Number of mechanical operations		10,000
Climatic conditions		acc. to IEC 60068-2-30 (25..55°C / 90..95% RH)
Operating temperature range		-5°C up to +40 °C
Storage- and transport temperature		-40°C up to +75°C
Operating utility frequency		50/60 Hz (B, C, D up to 40 A) 60 Hz (50, 63 A)

Connection diagram

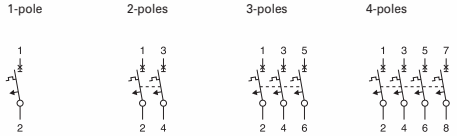

Connection of ring cable lugs (only FAZ...RT)

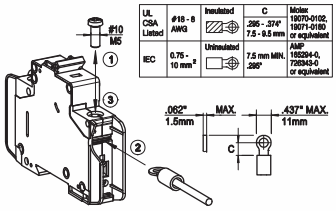

1.16 Miniature Circuit Breakers

FAZ-...-NA, -RT - Technical Data

xEffect

Dimensions (mm) FAZ-...-NA, -RT

1-pole

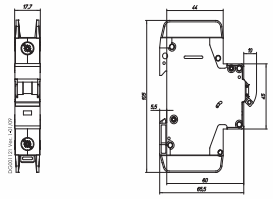

2-poles

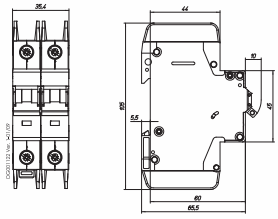

3-poles

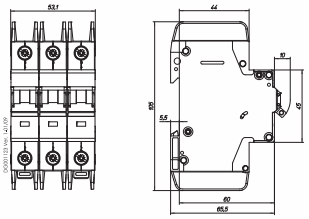

4-poles

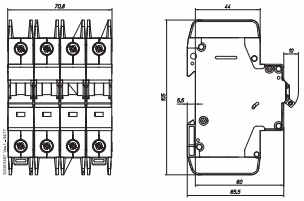

Tripping Characteristics FAZ-...-NA, -RT

Characteristics C and D - EN/IEC 60947-2

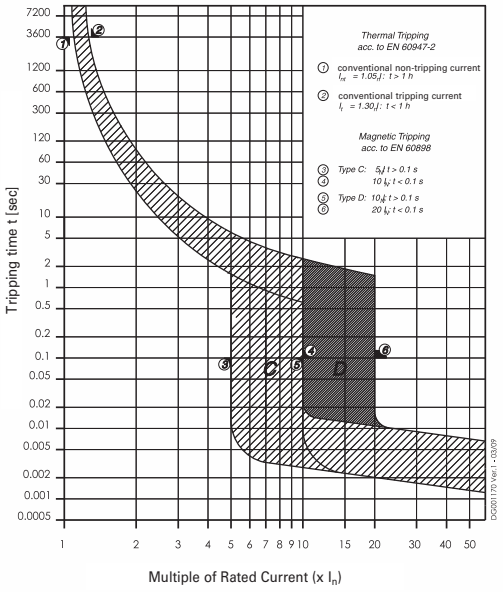

Characteristics B, C and D - UL 489

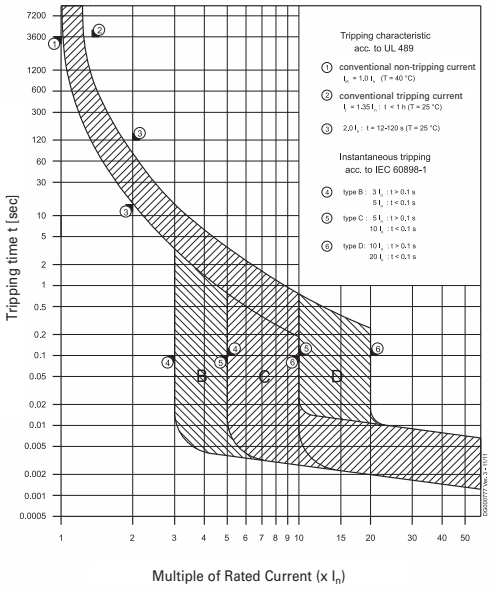

Internal Resistance FAZ-...-NA, -RT

Type B

At room temperature (single pole)

I_n [A]	R* [mΩ]
1	1100
1.5	900
2	350
3	220
4	87
5	72
6	47
7	38
8	30
10	17
13	13
15	8.0
16	8.0
20	6.9
25	3.9
30	2.8
32	3.0
35	2.9
40	1.9
50	1.6
63	1.2

*50/60 Hz

Type C

At room temperature (single pole)

I_n [A]	R* [mΩ]
1	1100
1.5	580
2	350
3	130
4	87
5	60
6	32
7	28
8	19
10	14
13	13
15	8.0
16	8.0
20	6.9
25	3.9
30	2.8
32	3.0
35	2.5
40	1.9
50	1.6
63	1.2

*50/60 Hz

Type D

At room temperature (single pole)

I_n [A]	R* [mΩ]
1	800
1.5	490
2	260
3	130
4	87
5	58
6	32
7	28
8	19
10	14
13	11
15	8.0
16	8.0
20	4.9
25	3.5
30	2.5
32	2.6
35	2.5
40	1.8
50	1.7
63	1.2

*50/60 Hz

Power Loss at In FAZ-...-NA, -RT

Type B

	1p	2p	3p	4p
I_n [A]	P [W]	P [W]	P [W]	P [W]
1	1.2	2.2	3.6	4.8
1.5	2.2	4.4	6.6	8.8
2	1.4	2.8	4.2	5.6
3	2.2	4.4	6.6	8.8
4	1.4	2.8	4.2	5.6
5	1.9	3.8	5.7	7.6
6	1.8	3.6	5.4	7.2
7	2	4	6	8
8	2.1	4.2	6.3	8.4
10	1.8	3.6	5.4	7.2
13	2.5	5	7.5	10
15	2	4	6	8
16	2.3	4.6	6.9	9.2
20	3.3	6.6	9.9	13.2
25	2.8	5.6	8.4	11.2
30	3	6	9	12
32	3.5	7	10.5	14
35	4	8	12	16
40	3.4	6.8	10.2	13.6
50	4.4	8.8	13.2	17.6
63	5.5	11	16.5	22

*50/60 Hz

Type C

	1p	2p	3p	4p
I_n [A]	P [W]	P [W]	P [W]	P [W]
1	1.2	2.4	3.6	4.8
1.5	1.3	2.6	3.9	5.2
2	1.4	2.8	4.2	5.6
3	1.2	2.4	3.6	4.8
4	1.5	3	4.5	6
5	1.6	3.2	4.8	6.4
6	1.2	2.4	3.6	4.8
7	1.4	2.8	4.2	5.6
8	1.3	2.6	3.9	5.2
10	1.5	3	4.5	6
13	2.5	5	7.5	10
15	2	4	6	8
16	2.3	4.6	6.9	9.2
20	3.3	6.6	9.9	13.2
25	2.8	5.6	8.4	11.2
30	3	6	9	12
32	3.5	7	10.5	14
35	3.7	7.4	11.1	14.8
40	3.4	6.8	10.2	13.6
50	4.4	8.8	13.2	17.6
63	5.5	11	16.5	22

*50/60 Hz

Type D

	1p	2p	3p	4p
I_n [A]	P [W]	P [W]	P [W]	P [W]
1	0.8	1.6	2.4	3.2
1.5	1.1	2.2	3.3	4.4
2	1.1	2.2	3.3	4.8
3	1.2	2.4	3.6	4.8
4	1.5	3	4.5	6
5	1.5	3	5.5	6
6	1.2	2.4	3.6	4.8
7	1.4	2.8	4.2	5.6
8	1.3	2.6	3.9	5.2
10	1.5	3	4.5	6
13	2	4	6	8
15	2	4	6	8
16	2.3	4.6	6.9	9.2
20	2.2	4.4	6.6	8.8
25	2.5	5	7.5	10
30	2.7	5.4	8.1	10.8
32	3	6	9	12
35	3.8	7.6	11.4	15.2
40	3.1	6.2	9.3	12.4
50	4.9	9.8	14.7	19.6
63	5.5	11	16.5	22

*50/60 Hz

Maximum Let-Through Energy FAZ-...-NA, -RT

Type C (0.5 - 32 A), 277 V

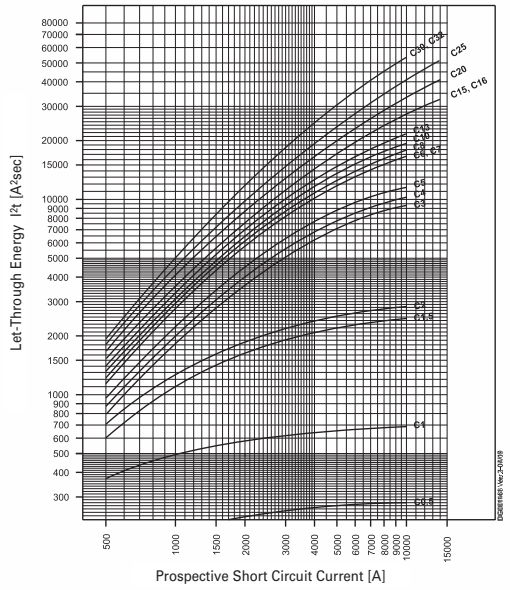

Type C (35 - 40 A), 240 V

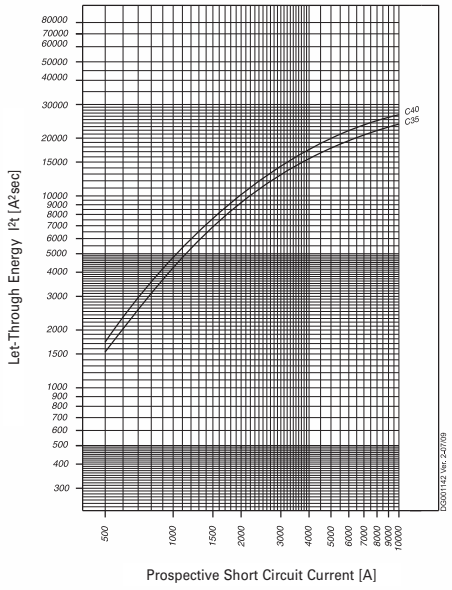

Type D (0.5 - 32 A), 277 V

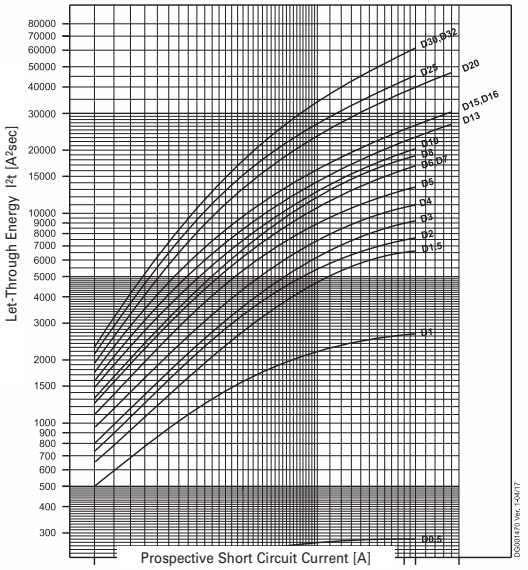

Type D (35 - 40 A), 240 V

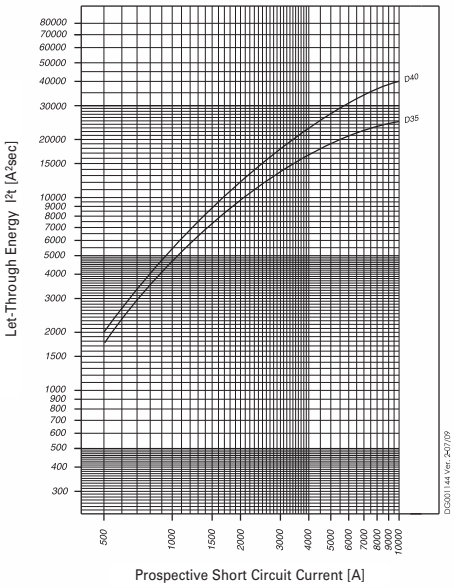

Maximum Let-Through Current FAZ-...-NA, -RT

Type C (0.5 - 32 A), 277 V

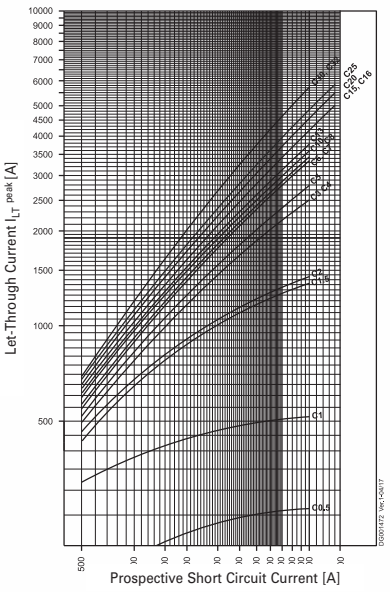

Type C (35 - 40 A), 240 V

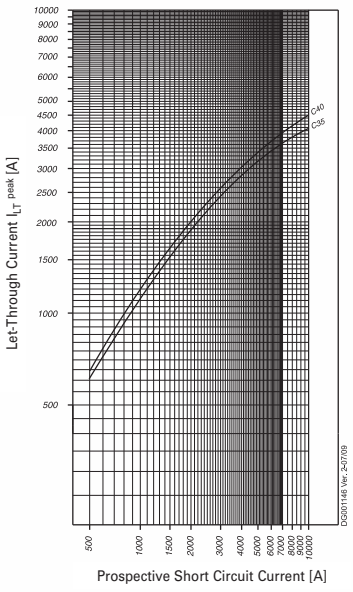

Type D (0.5 - 32 A), 277 V

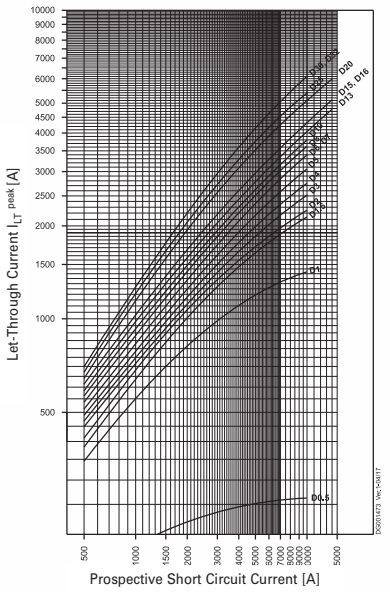

Type D (35 - 40 A), 240 V

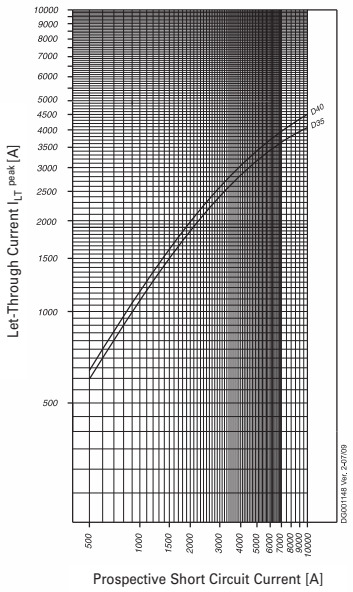

Influence of Ambient Temperature on Load Carrying Capacity (temperature derating)

Values in the table display the nominal current I_n in ampere depending on the ambient temperature

	Ambient Temperature T [°C]										
	-25	-10	5	15	20	25	30	40*	50	55	60
I_n [A]											
0.5	0.6	0.6	0.6	0.6	0.5	0.5	0.5	0.5	0.5	0.5	0.5
1	1.3	1.2	1.1	1.1	1.1	1.1	1.0	1.0	1.0	0.9	0.9
1.5	1.9	1.8	1.7	1.7	1.6	1.6	1.6	1.5	1.4	1.4	1.4
2	2.5	2.4	2.3	2.2	2.2	2.1	2.1	2.0	1.9	1.9	1.8
3	3.8	3.6	3.4	3.3	3.2	3.2	3.1	3.0	2.9	2.8	2.8
4	5.0	4.8	4.6	4.4	4.3	4.2	4.2	4.0	3.8	3.8	3.7
5	6.3	6.0	5.7	5.5	5.4	5.3	5.2	5.0	4.8	4.7	4.6
6	7.6	7.2	6.8	6.6	6.5	6.4	6.2	6.0	5.8	5.6	5.5
7	8.5	804	8.0	7.7	7.6	7.4	7.3	7.0	6.7	6.6	6.4
8	10.1	9.6	9.1	8.8	8.6	8.5	8.3	8.0	7.7	7.5	7.4
10	12.6	12.0	11.4	11.0	10.8	10.6	10.4	10.0	9.6	9.4	9.2
13	16.4	15.6	14.8	14.3	14.0	13.8	13.5	13.0	12.5	12.2	12.0
15	18.9	18.0	17.1	16.5	16.2	15.9	15.6	15.0	14.4	14.1	13.8
16	20.2	19.2	18.2	17.6	17.3	17.0	16.6	16.0	15.4	15.0	14.7
20	25.2	24.0	22.8	22.0	21.6	21.2	20.8	20.0	19.2	18.8	18.4
25	31.5	30.0	28.5	27.5	27.0	26.5	26.0	25.0	24.0	23.5	23.0
30	37.8	36.0	34.2	33.1	32.4	31.8	31.2	30.0	28.8	28.2	27.6
32	40.3	38.4	36.5	35.2	34.6	33.9	33.3	32.0	30.7	30.1	29.4
35	44.1	42.0	39.9	38.5	37.8	37.1	36.4	35.0	33.6	32.9	32.2
40	50.4	48.0	45.6	44.0	43.2	42.4	41.6	40.0	38.4	37.6	36.8
50	63.0	60.0	57.0	55.0	54.0	53.0	52.0	50.0	48.0	47.0	46.0
63	79.4	75.6	71.8	69.3	68.0	66.8	65.5	63.0	60.5	59.2	58.0

*IEC 60947-2, nominal current at reference calibration temperature 40°C

Electroswitch Part # 2438D

SERIES 24
2438D

Series 24 Lighted Nameplates

The Series 24 family of Manual and Remotely Operated Switches are Now Available with Built-In, Cost-Effective, Long-Life LED Indicators. The Series 24 Switch, the Utility Industry Standard for Quality and Reliability is Now a Better Value Than Ever!

Benefits

- Saves Panel Space
- Reduces Purchase and Installation Cost
- Easy to Use… No Special Operator Training
- Provides Local and Remote (SCADA) Annunciation of Breaker Trip Coil Failure

Features

- Can be used on ALL Series 24 Switches
- Is Available with One, Two or Three Replaceable LEDs
- Flexible Circuitry lets LEDs be Wired to Indicate Any Desired Event
- Is Available With or Without a Mechanical Target
- 125VDC Unit Covers IEEE 48V/125V Ranges (38 to 140VDC)
- AC Unit Available
- Saves Panel Space by Fitting up to 3 LEDs into the Standard Series 24 Nameplate Footprint
- Allows Monitoring of Breaker Trip Coil with Local (Center LED) and SCADA Annunciation
- Model Available to Simultaneously Monitor Two Independent Isolated Trip Coils
- Uses Large LEDs that:
  - Are Brighter than the Typical Incandescent Bulb
  - Have an 11 Year Life (Typical)
  - Are Socket Mounted for Design Flexibility and Easy Front of Panel Field Replacement
  - Are More Rugged than Incandescent Bulbs
  - Are Available in Red, Green, Amber, Blue and White
  - Each LED Draws Less than 10mA when Lit

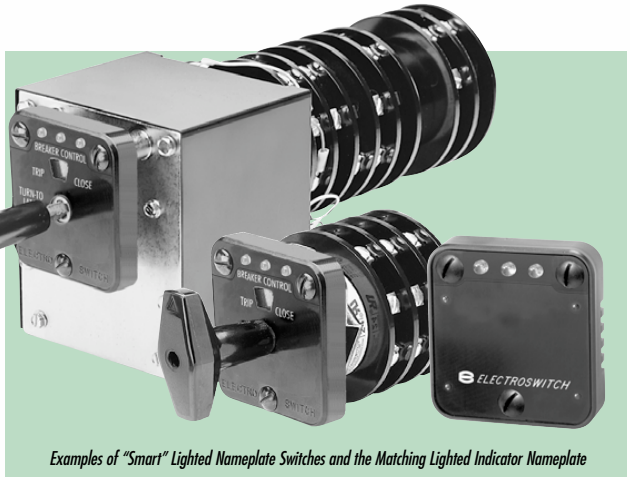

Examples of "Smart" Lighted Nameplate Switches and the Matching Lighted Indicator Nameplate

Approvals

- UL File No. E18174
- CSA
- CE

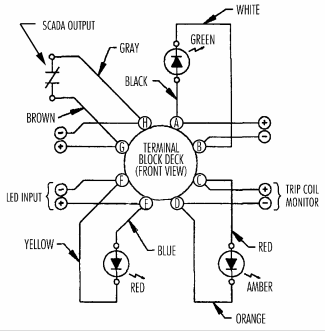

CIRCUIT BREAKER - Control Switches

Depth Behind Panel: 2.4"
Handle: Pistol-Grip, Spring-Return
Engraving and jumpering as shown

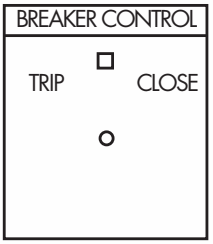

DECK	CONTACTS	POS. TRIP	POS. NORMAL	POS. CLOSE
1	11 ⊣⊢ 18	X		
	16 ⊣⊢ 17			X

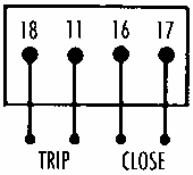

Order #
Series 24 = 2438D includes NP 18B-2B23

Electroswitch Part # 74902QF

ELECTROSWITCH
SWITCHES & RELAYS

(781) 335-5200
info@electroswitch.com

SERIES 24
INSTRUMENT AND CONTROL SWITCHES

Features

• Double-Sided, Double-Wiping, Knife-Type Rotary Contacts
• Silver Contact Surfaces for Long, Reliable Life
• Terminal Screws – Easy Installation
• Four-Hole Mount

Control Switch Special Features

• Spring Return to Normal (Vertical) Position

Instrument Switch Special Features

• Make-Before-Break (Shorting Contacts)
• Common Input Tap Switch Arrangement –– Sequentially Connected to Several Lines Using the Same Switching Deck
• Positive Positioning, Maintained Action Detent Mechanism

Electrical Specifications

Interrupt Ratings

• 15A/120VAC • 4A/600VAC • 7.5A/240VAC
• Overload Current (50 operations): 30A/125VAC Resistive
• Voltage Breakdown: 1200V rms minimum
• Insulation Resistance: 100 Megohms minimum
• Contacts Resistance: 10 milliohms maximum

Mechanical Specifications

Sections	1 to 30
Poles	1 to 60
Positions	8; Adjustable Stops for 2–8 Position Rotation
Contacts	Break-Before-Make (Non-Shorting); Make-Before-Break (Shorting)
Action	45° Positive Detent Indexing
Mounting	4-Hole
Panel Thickness	3/16" Max. Standard
Rotor Contacts	Silver Plated Phosphor-bronze, Double Grip
Stationary Contacts	Silver Plated Copper, w/Integral Screw Type Terminals
Construction	Contacts Enclosed in Molded-phenolic Disks

Approvals

• UL File No. E18174 • CSA File #LR20743

Electroswitch Part # 74902QF

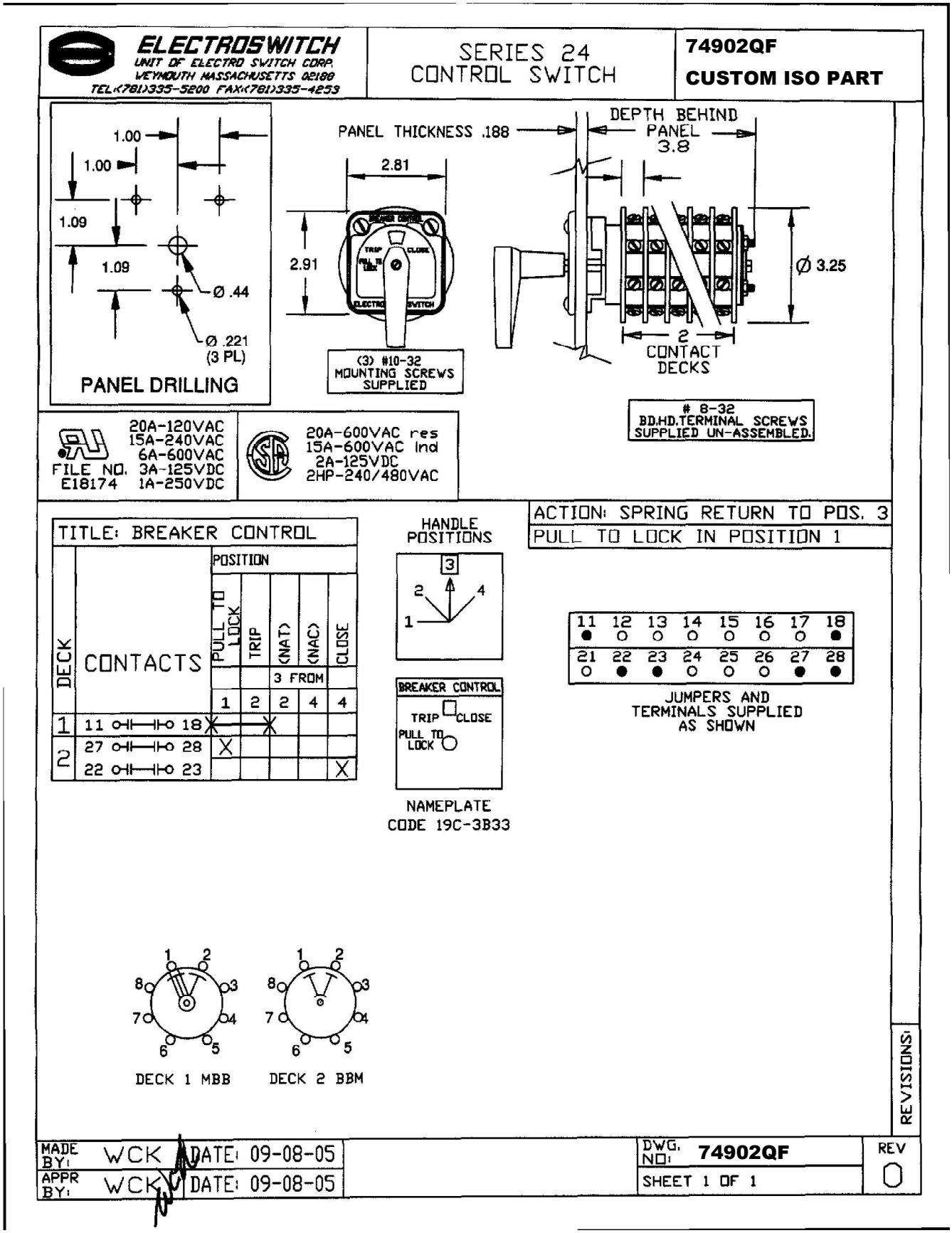

Electroswitch Part # 7803E

NEW PRODUCT

SERIES 24 LOR
With Lighted Target Nameplate

Lighted Target Nameplates Save Panel Space and Reduce Costs

The Electroswitch Series 24 Lock-Out Relay, the Utility Industry Standard for Quality and Reliability, is now available with:

- Integral Coil Monitoring with LED Display and SCADA Feedback.
- LED Indication of Existing Fault Signal.

The Lock-Out Relay fills one of the most critical needs in the utility industry protection scheme. A fast, reliable Lock-Out Relay can mean the difference between a routine fault clearance and a disastrous loss of service, maintenance time and expensive equipment damage.

To assure that this crucial device is functioning and ready to operate, many utilities install pilot lamps on the panel to monitor the integrity of the LOR coil. This can involve expensive inter-wiring and use precious panel space. Because of this, Electroswitch has integrated these monitoring functions and more on a new electronic nameplate for the LOR.

Features

- Cost-effective Elimination of Additional Wiring and Lamps Needed to Perform this Function. Just Attach the Pre-wired Leads per the Enclosed Instructions.
- Save Valuable Panel Space. The Entire Package Fits in the Same Space as a Standard Mechanical LOR Nameplate.
- Both LOCAL (LED) and REMOTE (SCADA Signal) Indication is Provided; Reliable Protection for Unmanned Stations.
- Green LED indicates LOR Coil is Intact and Ready to Operate.
- Red LED Warns Against Resetting into an Existing Fault Signal and Possibly Damaging LOR Coils.
- Bright LEDs Visible Through 135˚, > 11 Year Life (Typical).
- LEDs are Field Replaceable From the Front of Panel.
- LEDs are Available in Different Colors (Red, Amber, Green, Blue, and White).
- DC Unit Covers IEEE 24VDC and 48V/125V Ranges (38 to 140VDC).
- The Monitoring Package can be Implemented with Little or no Operator Training.
- A Retrofit Kit is Available to Provide this Enhanced Protection Package to Series 24 Lock-Out Relays Already in the Field.
- This Product is Designed and Manufactured by Electroswitch to Work Flawlessly with the Ultra-reliable, High Speed Series 24 Lock-Out Relay.

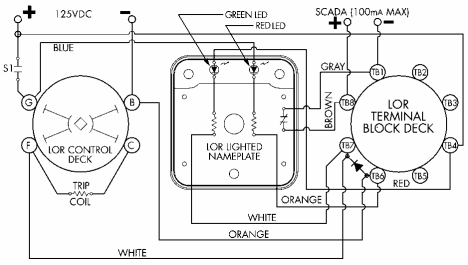

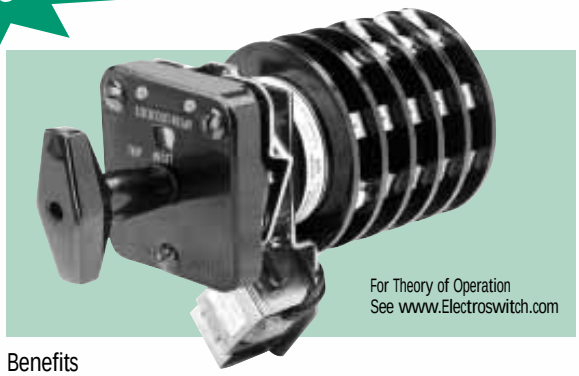

For Theory of Operation
See www.Electroswitch.com

Benefits

- Provides Local and Remote (SCADA) Annunciation of an LOR Trip Coil Failure.
- Provides Clear Warning Against Closing into a Fault.
- Saves Panel Space.
- Reduces Purchase and Installation Cost.
- Easy to Use…No Special Operator Training.

How it Works

When the LOR is in the RESET position, one high visibility LED on the nameplate glows a continuous GREEN, giving local indication that coil continuity is intact and the Lock-Out Relay is ready to respond to a trip signal. Should the coil fail, the LED extinguishes and a built-in solid state contact closes, sending a warning signal to SCADA.

In the TRIP position, the red LED functions as a Trip Signal Monitor. As long as the Trip Signal is present on the LOR coil, the LED glows a continuous RED as a warning against resetting into a fault and possibly damaging the LOR coil. Other LED colors available (Amber, Blue and White).

The new design also retains the proven mechanical orange/black flag to indicate a trip. Contact your local Electroswitch Representative or call us directly for more details on how we can put the Electroswitch tradition of value and innovation to work for you.

Ordering Information

Part Numbers for the Series 24 LORs with Lighted Target Nameplate are fairly simple. Find the part number of the product you wish to order in the Electroswitch catalog, then simply add a two letter code after the second digit in its part number. The first letter of the two letter code will always be " P " indicating a Lighted Target Nameplate. The second letter of the code will change depending on the other options as follows.

A = One LED, 48/125VDC B = Two LEDs, 48/125VDC K = Two LEDs, 24VDC
Please Specify LED Colors. Color Options - Red, Green, Amber, Blue and White.

Example:
A Series 24 Manual Reset Lock-Out Relay with one deck and Trip Coil 'D' is part number 7801D. The same Lock-Out Relay with a Lighted Target Nameplate, Two LEDs, and 48/125VDC LED voltage would become part number 78PB01D.

Consult factory for information on retrofit kits.

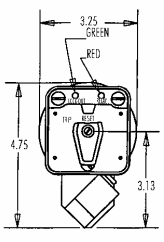

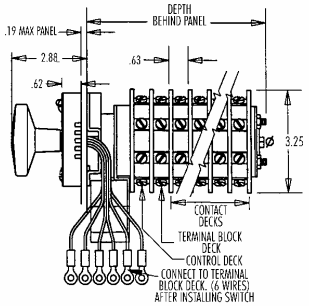

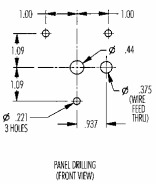

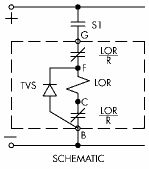

Depth Behind Panel

Decks	Depth
1	4.28
2	5.03
3	5.40
4	6.15
5	6.90
6	8.15
7	8.78
8	9.15
10	10.28

Electroswitch Part # 7803E

SERIES 24 LOCK-OUT RELAYS

FEATURES

Typical Contact Deck Arrangement

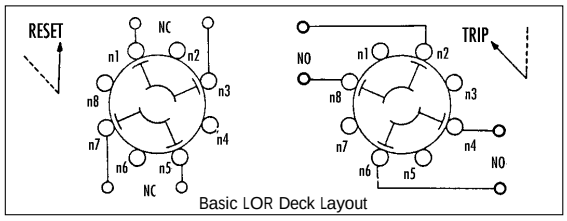

Basic LOR Deck Layout

The blade and terminal configuration enables the use of multiple contacts in the same deck, and simple stacking procedures enable the fabrication of many independent contacts in one relay. Specifically, two N/O contacts and two N/C contacts are provided in each deck, and up to ten decks can be stacked, resulting in a relay with up to forty contacts (twenty N/O and twenty N/C). For good practice, however, it is suggested that polarized voltages should not be used on adjacent contacts. This is because of the remote possibility of flashover during transition between adjacent contacts -- especially at the higher DC ratings, or in highly inductive circuits. The illustration shows a single deck. For multideck units the second digit of the terminal number is the same as shown, but the first digit changes to denote the deck number. As an example, terminal 82 is in the eighth deck, directly under terminal 12 and is connected to terminal 88 in the trip position.

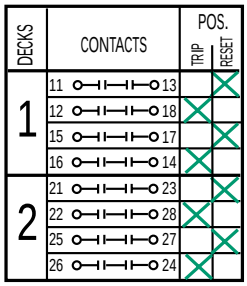

Contact Charts

The illustration shows decks one and two of a typical Series 24 LOR and graphically describes the operation of the contacts.

Target Used with Lock-out Relays

All the Lock-out Relays have a mechanical target as part of the nameplate – BLACK for RESET and ORANGE for TRIP. This indicates the condition of the LOR. The target resets when the LOR resets (with the exception of the high-speed trip electric-reset LOR/ER and self-reset LOR/SR where the memory target is manually reset).

Contact Ratings

Contact ratings for two contacts/deck design

Contact Circuit Volts	Interrupting Rating (AMPS)				Short Time Rating** (AMPS)	Continuous Rating (AMPS)
	Resistive		Inductive*			
	Single Contact	Double Contact	Single Contact	Double Contact		
125VDC	5	10	2	5	60	30
250VDC	3	5	1	2	60	30
120VAC	20	30	20	30	60	30
240VAC	15	20	10	15	60	30
480VAC	7.5	10	5	5	60	30
600VAC	6	6	5	5	60	30

Contact ratings for tap switch contact design

Contact Circuit Volts	Interrupting Rating (AMPS)				Short Time Rating** (AMPS)	Continuous Rating (AMPS)
	Resistive		Inductive*			
	Single Contact	Double Contact	Single Contact	Double Contact		
125VDC	3	5	2	5	60	30
250VDC	3	3	1	2	60	30
120VAC	20	25	20	30	60	30
240VAC	15	20	10	15	60	30
480VAC	7.5	10	5	5	60	30
600VAC	6	6	5	5	60	30

* AC PF = 0.4; DC L/R = 0.04 ** Short time current is for one minute

The interrupting ratings are based on a 10,000 operation life at rated voltage with no extensive burning of contacts. Short time and continuous ratings are based on temperature rise in contact members and supporting parts not to exceed 50° above ambient.

UL file No. E80080

- IEEE Std. 323 - 1984
- IEEE Std. 344 - 1987
- CE

Trip Speed in Lock-Out Relays

The manual reset Series 24 LOR has a nominal trip speed of less than 8 milliseconds at rated voltage as tested on 10 deck units. There is very little difference in LORs with fewer decks.

Both the Electric Reset and the Self Reset LORs are available in Standard Trip and High-Speed Trip configurations.

- Standard Trip models operate in approximately 12–15 mSec and come equipped with the standard LOR target nameplate or the optional LOR Monitor Nameplate.
- High Speed Trip LOR/ER models have the same 8 mSec trip speed as the Manual Reset LOR and come equipped with the Memory Target which displays an orange flag until it is manually reset. The LOR Monitor Nameplate is not available for the High Speed versions of LOR/ER and LOR/SR.

Electroswitch Part # 7803E

SERIES 24 LOCK-OUT RELAYS

OPTIONS

Manual Reset LOR

Closing S1 energizes the linear solenoid $\frac{LOR}{T}$ which releases the trigger mechanism and causes the LOR to snap to the Trip position. The control deck blades rotate to interrupt current flow to the coil.

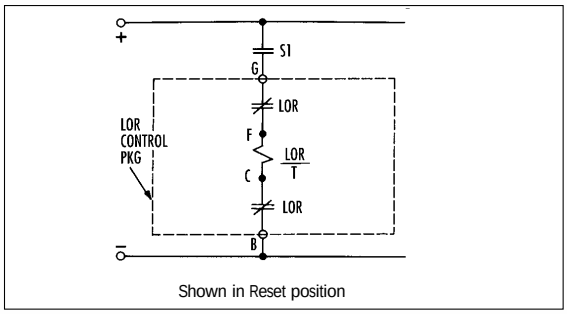

Shown in Reset position

Electric Reset LOR

The Electric Reset LOR is tripped by the same method as the Manual Reset LOR. In the Trip position, closing S2 operates relay K1 which closes relay contact K1. The current then flows through solenoid $\frac{LOR}{R}$ which rotates the LOR/ER back into the reset position, while at the same time terminals A-B open to interrupt the K1 relay. Transition time is 80mSec.

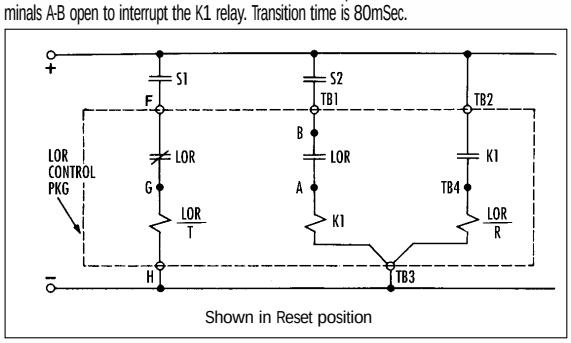

Shown in Reset position

Self Reset LOR

The Self Reset LOR is a special Electric Reset LOR which can be both TRIPPED and RESET from a single command contact. In both diagrams below, closing S1 will cause the LOR/SR to snap to the TRIP position. The unit will remain in TRIP as long as S1 remains closed. When S1 is opened, K1 is picked up and the LOR/SR returns to the reset position. The Instant Reset LOR/SR will reset itself within 80mS of the opening of S1. The Time Delay LOR/SR has factory preset circuitry which causes a time delay of .3 to .6 seconds from the time S1 opens until the LOR/SR contacts reclose.

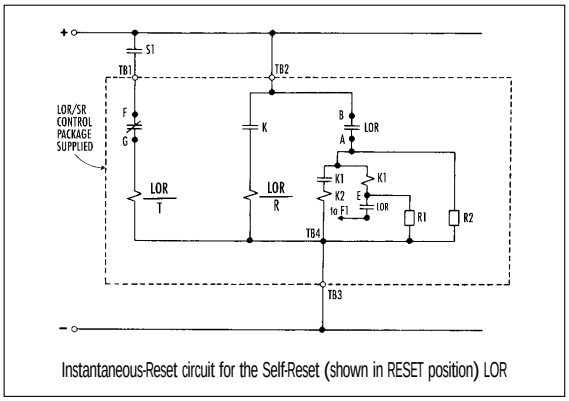

Instantaneous-Reset circuit for the Self-Reset (shown in RESET position) LOR

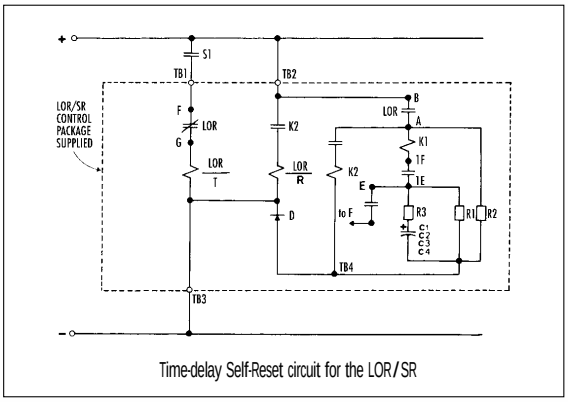

Time-delay Self-Reset circuit for the LOR/SR

Electroswitch Part # 7803E

SERIES 24 LOCK-OUT RELAYS

SERIES 24 MANUAL RESET LOR

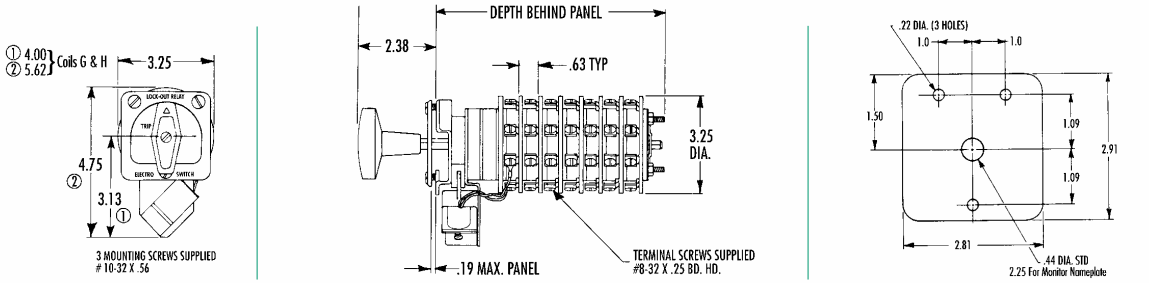

SERIES 24 LOR/ER, LOR/SR ELECTRIC RESET & SELF- RESET

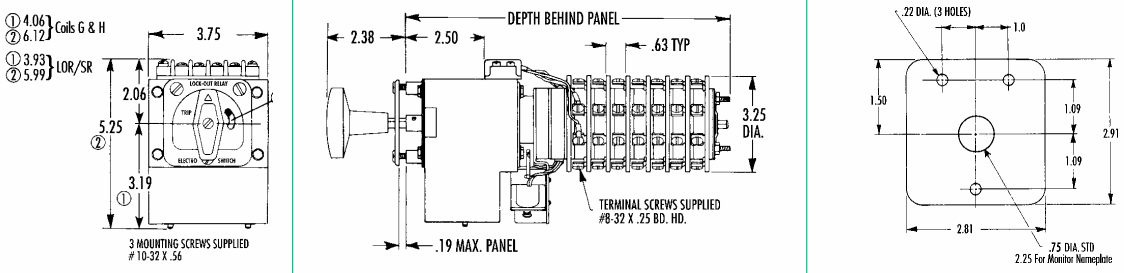

DEPTH BEHIND PANEL

NO. OF DECKS	MAN. RESET LOR	HI SPEED TRIP LOR/ER	LOR/ER AND INSTANT LOR/SR TIME DELAY	RESET LOR/SR
1	3.63	–	–	–
2	4.38	–	–	–
3	4.75	8.00	8.00	8.63
4	5.50	–	–	–
5	6.25	9.75	9.75	10.38
6	7.50	–	–	–
7	8.13	–	–	11.63
8	8.50	11.63	11.63	–
10	9.63	12.90	–	–

COIL BURDEN DATA

COIL	COIL CIRCUIT VOLTS	TRIP COIL		RESET COIL	
		COIL CIRCUIT DC OHMS @25°C	BURDEN (AMPS) AT RATED VOLTAGE	COIL CIRCUIT DC OHMS @25°C	BURDEN (AMPS) AT RATED VOLTAGE
A	24VDC	3.3	7.3	.7	33.8
B	24VDC	7.7	3.1	–	–
C	48VDC	13.0	3.7	3.0	15.9
D	125VDC	27.0	4.6	12.4	10.1
E	125VDC	50.0	2.5	–	–
F	250VDC	104.0	2.4	80.6	3.1
G	125VDC	27.0	4.6	–	–
H	250VDC	104.0	2.4	–	–
K	125VDC	27.0	4.6	–	–

TRIP COIL VOLTAGE DATA

Coil	Nominal Voltage	Threshold Voltage	Operating Range
A	24VDC	6VDC	10 - 40VDC
B	24VDC	9VDC	18 - 50VDC
C	48VDC	12VDC	24 - 70VDC
D	125VDC	16VDC	30 - 140VDC
	120VAC	20VAC	30 - 140VAC
E	125VDC	23VDC	45 - 140VDC
F	250VDC	33VDC	70 - 280VDC
	240VAC	40VAC	60 - 280VAC
G	125VDC	70VDC	90 - 140VDC
H	250VDC	140VDC	180 - 280VDC
K	125VDC	16VDC	100-150VDC

RESET COIL VOLTAGE DATA

Coil	Nominal Voltage	Normal Voltage Operating Range
A	24VDC	19.2 to 28VDC
C	48VDC	38.4 to 57.6VDC
D	125VDC	100 to 150VDC
F	250VDC	200 to 275VDC

Electroswitch Part # 7803E

SERIES 24 LOCK-OUT RELAYS

LOR RESPONSE TIMES*
Time to Close Normally Open Contacts

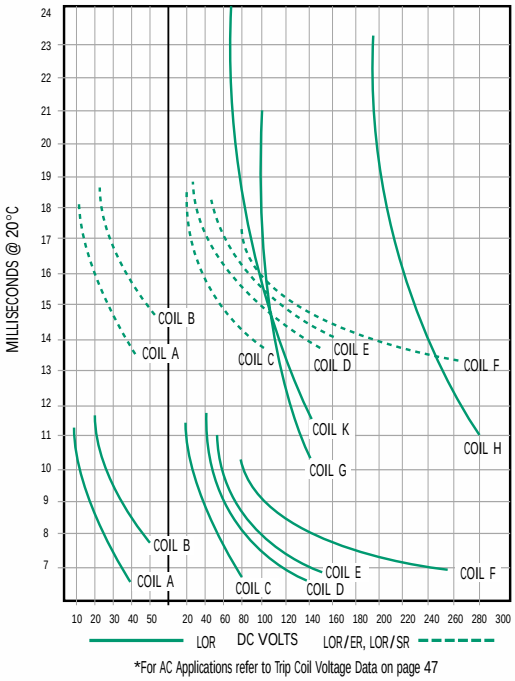

*For AC Applications refer to Trip Coil Voltage Data on page 47

LOR CURRENT
Voltage Characteristics Of The Trip Coils

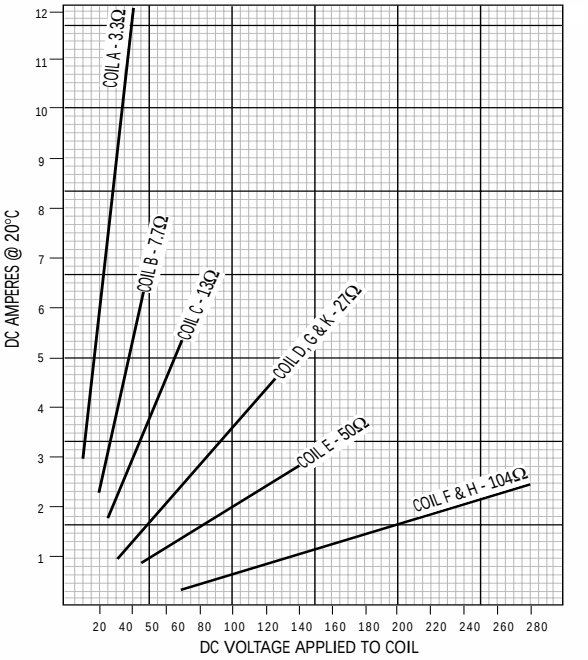

ORDERING INFORMATION

Selecting a Series 24 Lock-Out Relay:

1. Select type of LOR (Manual Reset, Electric Reset or Self Reset).
2. Fill out appropriate ordering matrix.
3. When selecting Trip and Reset Coils use information from tables below.
4. Contact factory for custom features and nonstandard configurations.

Manual Reset LOR

78	□□	□
Model	No. of Decks	Trip Coil (See Page 47)
78 = LOR	03 = 3 08 = 8 05 = 5 10 = 10	A = Coil A D = Coil D G = Coil G B = Coil B E = Coil E H = Coil H C = Coil C F = Coil F K = Coil K

Elo Part # 19WS-24VDC-ISO

- Pure glass touchscreens for optimal image quality
- Commercial durability
- 3 year warranty

2094L 19.5-inch LED Open-Frame Touchmonitor

The Elo 2094L 19.5" open-frame LCD touch display features a slim design and narrow outside dimensions due to the state-of-the art energy-saving LED backlight, using less electricity to operate and generating less heat. Featuring a brilliant wide viewing angle panel, the 2094L instantly grabs and holds the users' attention for kiosks, casino and amusement, retail self-service, and industrial floor automation.

This compact touch display is "designed for touch" with proven Elo expertise and reliability built in. The 2094L provides stable "drift-free" operation with outstanding image clarity and light transmission—for accurate touch responses and vivid images. The touchscreen is sealed against dirt, dust and liquids, which simplifies integration into the final enclosure. Long-lasting product availability can be expected as the design and tooling is controlled by Elo specifications.

Available with a choice of industry-leading touch technologies, in single- or multi-touch technology, including IntelliTouch® single-touch surface acoustic wave (SAW) touchscreen technology, and Elo's latest projected capacitive (PCAP) 2GS (two glass solution) multi-touch display with zero-bezel, offering both a ten touch "tablet like" interactive experience along with thru-glass functionality - both modes support single or dual latex gloves as well as cloth gloves.

At Elo, we design, build and are responsible for the complete solution with touch integrated from the start. We use our own touchscreens combined with our software and drivers, everything is designed to work together and tested as part of our life testing processes.

Worldwide agency approvals cover the whole display, which is developed, built, serviced and supported by a true single source supplier. The 2094L open-frame LCD touch display provides an economical solution for system integrators and VARs.

PRODUCT OVERVIEW

Benefits

- Choice of touch technology:
  - **Standard bezel:** IntelliTouch SAW
  - **Zero-bezel:** Projected capacitive
- LED backlighting allows for state-of-the-art slim design while reducing power consumption
- Mounting options include rack and front-mount
- Viewing angle of 178°(h) x 178° (v), for sharp colors and graphics in both portrait and landscape modes
- PCAP 2GS (two glass solution) offers pristine optical clarity and touch durability
- 10 touch projected capacitive (PCAP) with Thru-glass capabilities that passes UL-60950 & IK-07 Impact testing
- Display Port and VGA video interfaces

Application

- Casino and amusement games
- Retail self-service
- Kiosks
- Industrial Automation

About Elo

Elo founders pioneered the touchscreen over 40 years ago. Today, Elo Touch Solutions is a leading global supplier of touch-enabled technology, products and industry solutions. The Elo portfolio encompasses the broadest selection of OEM touchscreen components, touch displays, and all-in-one touchcomputers for the demanding requirements of diverse markets, including gaming machines, hospitality systems, industrial automation, interactive kiosks, healthcare, office equipment, point of sale terminals, retail displays, and transportation applications. The Elo touch experience has consistently stood for quality, reliability and innovation with over 20 million installations worldwide.

Elo Part # 19WS-24VDC-ISO

2094L 19.5-inch Open-Frame Touch Display

Specifications	
Model	2094L
Color	Black
Active Display Area	434.9 x 238.7 mm / 17.12 x 9.40 inches
Diagonal	19.5"
Aspect Ratio	16:9
Dimensions	**Bezel:** 476 x 280.1 x 43.4 mm / 18.74 x 11.03 x 1.71 inches; **Zero-Bezel:** 479.2 x 285 x 40.5 mm / 18.87 x 11.22 x 1.59 inches
Native Resolution	1920x1080 at 50, 60Hz
Other Supported Resolutions	640x480 at 60Hz; 720x400 at 70Hz; 800x500 at 60Hz; 800x600 at 56, 60Hz; 1024x768 at 60Hz; 1280 x 800 60 Hz; 1280x1024 at 60Hz; 1366x768 at 60Hz, 60Hz RB; 1440x900 at 60Hz, 60Hz RB; 1680x1050 at 60Hz, 60Hz RB
Colors	16.7 million
Brightness (typical)	LCD Panel: 250 nits; IntelliTouch: 225 nits; Projected Capacitive (PCAP): 225 nits
Response (typical)	20ms
Viewing Angle	Horizontal: 89°/178°; Vertical: 89°/178°
Contrast Ratio	3000:1
On-Screen Display	**Accessible through switches on the unit's tethered OSD Control box.** **Controls:** Menu, Up, Down, Select, Power **Settings:** Brightness, Contrast, Clock, Phase, H-position, V-position, Auto-Adjust, Aspect Ratio, Sharpness, Color Temperature, OSD Timeout, OSD Language, OSD H-Position, OSD V-Position, Recall Defaults, Video Priority, Information, Touch On Sleep Mode, Touch Through **Languages:** English, French, Italian, German, Spanish, Simplified Chinese, Traditional Chinese, Japanese **Lockouts:** OSD, Power
Input video format	Analog VGA and DisplayPort
Input video signal connector	Analog VGA on Female DB-15 connector DisplayPort V1.1a - Supports later versions of Display Port video input
Scanning frequency	Horizontal: 30 - 82 kHz; Vertical: 50 - 75 Hz
Power	**Monitor Input Power Connector:** Coaxial power jack (2.1mm pin outer diameter, 5.5mm barrel inner diameter) **Monitor Input Power Signal Specifications:** 12VDC +/- 5% **Power Brick Input Connector:** IEC 60320 C14 **Power Brick Input voltage range:** 100-240VAC, 50/60Hz
Power Consumption	ON (monitor + power brick): 20W SLEEP (monitor + power brick): 1.5W OFF (monitor + power brick): 0.5W
Temperature	Operating: 0 °C to 40 °C (32 °F to 104 °F); Storage: -20 °C to 60 °C (-4 °F to 140 °F)
Humidity	Operating: 20% to 80%; Storage: 10% to 95%
Weight	Unpackaged: 10.36 lb (4.7Kg); Packaged: 14.11 lb (6.4Kg)
Shipping Dimensions	575 (L) x 376 (W) x 185 (H) mm / 22.64 (L) x 14.8 (W) x 7.28 (H) inches
Mounting Options	100mm VESA mount; 2 Hole mounting interface on all four sides; Front mount with optional bezel kit (IT/AT/ST Models); Rack mount with optional kit (IT/AT/ST Models); Flush mount with included brackets (PCAP Models)
Warranty	3 years standard
MTBF	50,000 hours demonstrated
Agency Approvals	UL, FCC; RCM; cUL, IC; CCC; CE, TUV; VCCI; KCC; CoC; BSMI; CB; RoHS, China RoHS, WEEE, IMERC
What's in the Box	**All displays include:** VGA Cable, RJ45 OSD Remote, USB Touch Cable, User Manual CD, and Quick Install Guide; **For Zero-Bezel Models:** Flush Mount Brackets w/Screws; **For Bezeled Models:** "L" (Side Mount) Brackets w/Screws

Ordering Information

Model	Part Number	Part Description	Technology	Interface	Surface Treatment	Video Interface	Availability
2094L	E179257	ET2094L-2UWA-0-MT-ZB-NPB-G	Projected Capacitive	USB	Clear	VGA & DP	Worldwide
	E197628	ET2094L-8CWA-0-ST-NPB-G	IntelliTouch	Dual serial/USB	Clear	VGA & DP	Worldwide

To find out more about our extensive range of Elo touch solutions, go to **elotouch.com**, or call the office nearest you.

North America
Elo Touch Solutions
1033 McCarthy Boulevard
Milpitas, CA 95035

800-ELO-TOUCH
Tel +1 408 597 8000
Fax +1 408 597 8001
customerservice@elotouch.com

Europe
Tel +32 (0)16 70 45 00
Fax +32 (0)16 70 45 49
elosales@elotouch.com

Asia-Pacific
Tel +86 (21) 3329 1385
Fax +86 (21) 3329 1400
www.elotouch.com.cn

Latin America
Tel +1 786-923-0251
Fax +1 305-931-0124
www.elotouch.com

Elo reserves the right to change or update, without notice, any information contained herein; to change, without notice, the design, construction, materials, processing or specifications of any products; and to discontinue or limit production or distribution of any products. Elo, the Elo logo, and IntelliTouch are either trademarks or registered trademarks of Elo Touch Solutions, Inc. All other trademarks are the property of their respective owners. © 2016 Elo Touch Solutions, Inc. All rights reserved. 16041AES00037

GE
Grid Solutions

FT & RT Test Switches

Key Benefits

The FT Switches and FT Test Plugs have all the features necessary for applications involving the measurement of individual currents and voltages to facilitate testing of substation instrumentation and protection devices from the front of the panel. The make before-break current short circuit feature allows test personnel the convenience of isolating equipment from current transformer circuits.
Voltage measurements can be made directly on the FT Switch without disturbing existing connections. There is a test clip provision located on the top of each pole that allows connection with standard spring clip test leads.

Applications

FT Test Switches:

The FT Test Switches and Test Plugs provide a safe, simple, immediate and reliable method to isolate equipment and measure system current and voltage during field testing and commissioning.

RT Rack Mount Test Switches:

RT Switch assemblies for rack and switchboard mounting permit convenient isolation of switchboard relays, meters and instruments. RT racks allow quick and easy multi-circuit testing by conventional test methods and for faster installation into switchgear.

Features

FT Test Switch:

- Built with a maximum of ten individual poles, of potential, current, and current shorting switch units
- Switches can be assembled in a variety of different arrangements to match customer requirements
- FT Test plugs are used in conjunction with the FT Switches to enable easy measurement, calibration, verification or maintenance of relays, meters and instruments
- UL / cUL E101598

Protection:

- With the cover in place, a meter type seal can be placed through either of the cover studs of the FT Switch to prevent unauthorized access
- Standard black cover mounts only when all switches are in the closed position
- A clear cover is available that can be installed with the switchblades in the open or closed position

RT Rack Mount Test Switches:

- RT Switches accommodate three FT switches mounted on a 19” wide steel mounting panel (Brushed aluminum available)
- Provides up to 30 terminals with three FT combinations
- Color and finish can be customized
- Optional rack heights for label applications
- Each panel is supplied with the hardware to mount the RT assembly to the 19” rack enclosure
- The RT assembly will support an FT style test plug
- Full-length clear cover is standard. Full length black cover, individual clear covers, and individual black covers are available UL / cUL E101598

Protection:

- Once the full-length clear cover on the RT switch is installed, it prohibits access to some of the rack mounting screws
- Individual clear covers offer additional protection consistent with common testing procedures to ensure only correct switch is exposed during testing

FT Specifications

Rating

The standard FT switch is rated at 600 volts and 30 Amps. The Switch meets or exceeds all requirements of ANSI / IEEE Standard C37.90 and is UL and cUL recognized.

Mounting

FT Switches are designed for semi-flush mounting on the front of switchboard panels, facilitating inspection and accessibility.

Drilling Plan - Inches

Weight	Net Lbs	Shipping Lbs
FT Switch	1.4	1.6
Test Plug	1.2	1.4

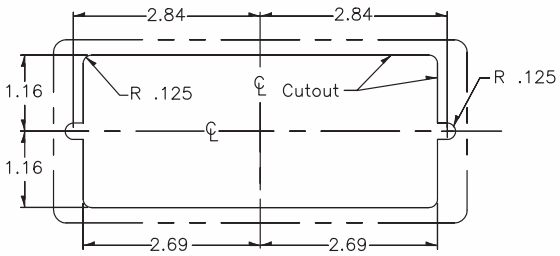

FT Switch Construction

The base of the FT Switch is made of black electrical grade plastic material which provides a tough insulated enclosure. Barriers are molded into the base (front and rear) to separate the switch units from one another. The barriers provide insulation between poles and ample space between terminals.

Cover

FT Switches come with a black opaque cover or a clear see-through cover. Switch covers provide a tough insulated enclosure for the switch and are made from plastic material. The clear cover affords the user the option of leaving switch handles in the open position and replacing the cover while maintaining the provision for a meter type seal when some or all switch handles are in the open position. This feature allows the user to service electrical equipment while still complying with OSHA lockout/tag-out procedures. The clear cover can be ordered separately for retrofit to existing FT Switches. RT racks come standard with a full length clear cover and can be sealed with a meter seal.

Fasteners

Captive fasteners are made of molded plastic with a threaded brass insert for easy cover installation and removal.

Switch Poles

FT Switches are available in configuration of 1 to a maximum of 10 individual poles or switch units. Each pole identified by letter (A thru J), which is visible along the top of the base from left to right. The individual switch units are of knife blade type. There are three different types of switch units available: potential, current, and current shorting.

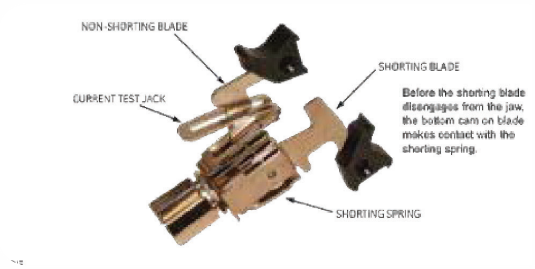

Switch Handles

Switch handles are made of a molded plastic insulating material typically black in color. Red handles can be supplied by replacing the “P” with “T” for potential handles and replacing “C” with “R” for current handles. Additional colors are available upon request.

Each handle has a dovetail indentation to hold a circuit identification label (by others). Knife blade switches can be operated independently or ganged together with a horizontal interlocking bar (see page 4).

A hole runs through the middle of each switch handle to allow insertion of interlocking bars. 2 to 10 switch handles can be mechanically tied together.

Terminals

Connection terminals are located at the rear of the switch and can be either screw or stud type. Terminals are numbered 1 thru 20 for easy identification. Each pair of numbered terminals is associated with a matching pole designated by a letter on the front of the switch.

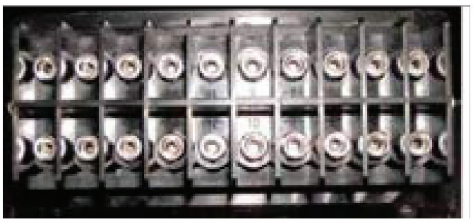

FT Test Plugs

The Test Plug with a maximum of 10 positions is designed to match the pole configuration of specific styles of FT Switches. Not every switch configuration is suitable to accept a Test Plug. For available styles, see switch selection tables.

10-Pole "In-Service Series" Test Plug Inserted into FT Test Switch

In-Service Series Test Plug

Provision is made only on current poles with shorting springs to automatically short-circuit current transformer circuits when the knife switches are opened prior to inserting the Test Plug.
This Test Plug is typically used to connect devices measuring the currents and voltages being applied to the switchboard relays, meters and instruments without interrupting or short-circuiting the circuit. Only the current test switches with the current jack must be opened before inserting the Series Test Plug.
Connections to the test plug must be made before inserting the test plug into the FT Switch. Before inserting the Test Plug, all switchblades that are opposite bi-conductor paddles must be placed in the full open position.

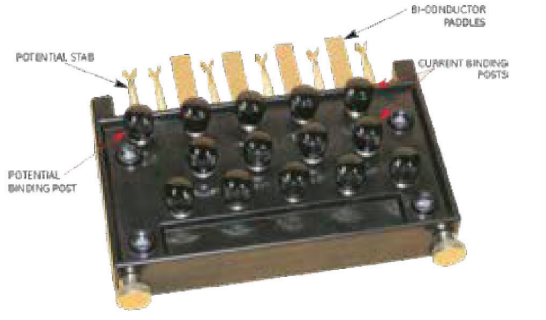

10-Pole "In-Service Series" Test Plug

Non Standard FT Style Switch Selector

Step 1

- The Switch body can support 1 to 10 poles in slot marked A through J
- Enter a letter from the legend. Leave unused slots blank

Position:

A	B	C	D	E	F	G	H	I	J

Example:

A	B	C	D	E	F	G	H	I	J
P	C -	- C	R	C	R -	- R	P	P	P

Legend:

P=Potential, Black
T=Potential, Red
C=Current, Non-shorting, Black
C-C or C-C-C- or C-C-C-C = Current , Shorting, Black
R = Current, Non-shorting, Red
R-R, R-R-R, R-R-R-R = Current, Shorting, Red
Additional colors available - See page 11
(Note: Some functions will require more than one slot in the switch body).

Step 2

(Optional)

If a tie bar is required then check this box and draw a dark heavy line over the poles to be joined. (In the example shown in Step 1 positions H, I and J will operate together.)

Step 3

Select a cover style

Clear (installs over open and closed switch blades)

Black (installs over closed switch blades only)

Step 4

Select a rear terminal type

Screws (Standard) Studs (Optional)

Catalog Number for FT Style Switches

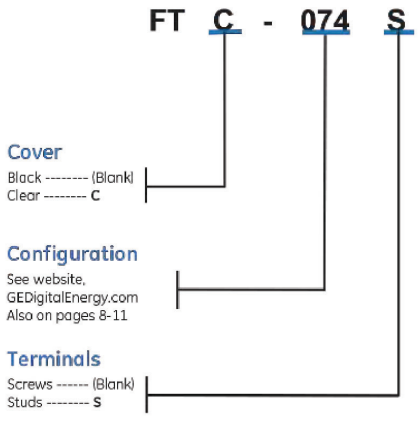

Catalog Number for RT Style Rack Mount Switches

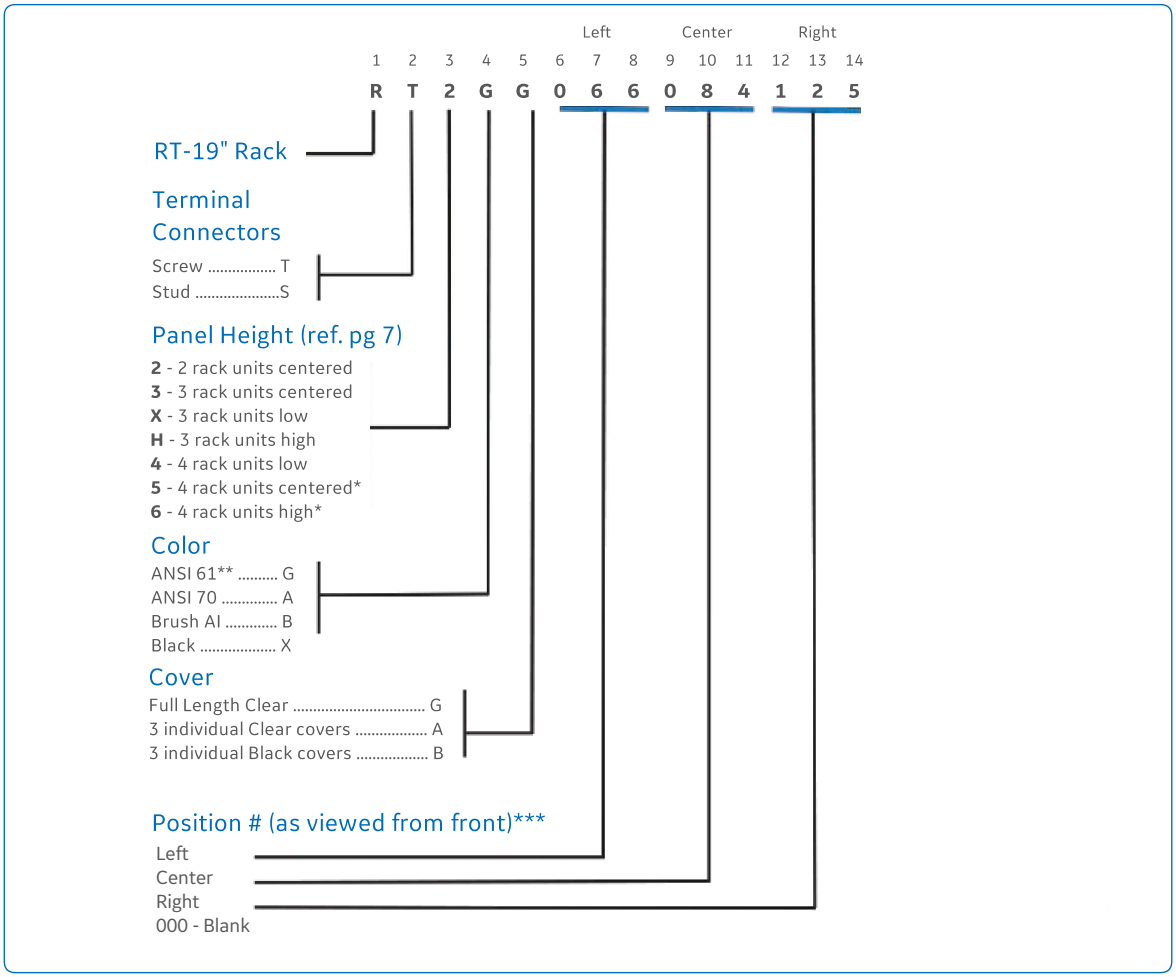

** Not UL/cUL*
*** Denotes Standard Features*
**** See page 8 through 11 for 3 digit codes of go to "Configurate a FT Switch" at www.GEGridSolutions*

Dimensional Drawing - Type FT Test Switch

Black cover and threaded stud terminals

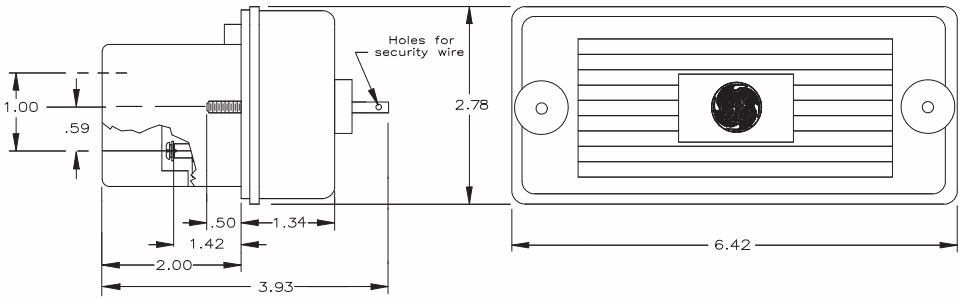

Clear cover and screw terminals

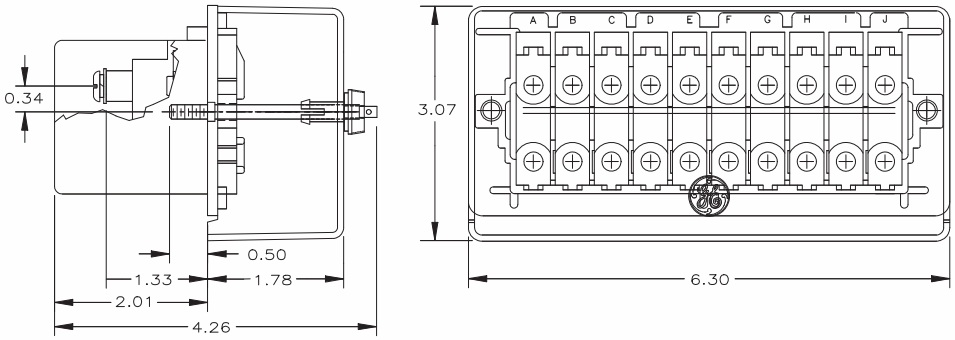

Typical FT Switch Connection Schematic using an FT-076 switch

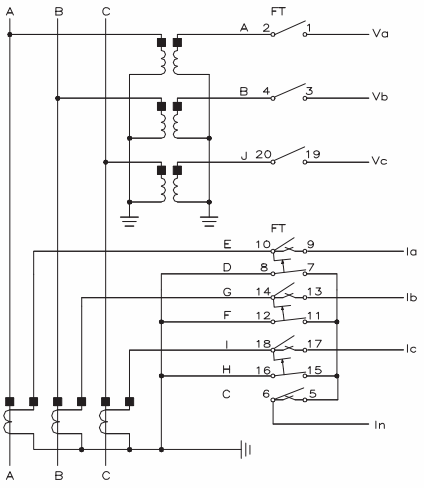

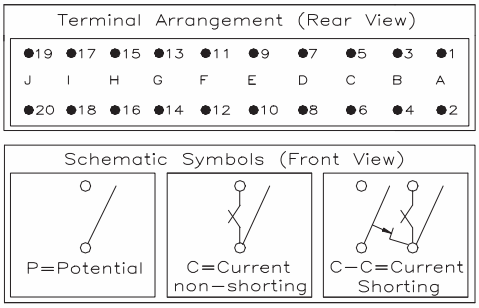

Dimensional Drawing - Type RT Mounting Racks

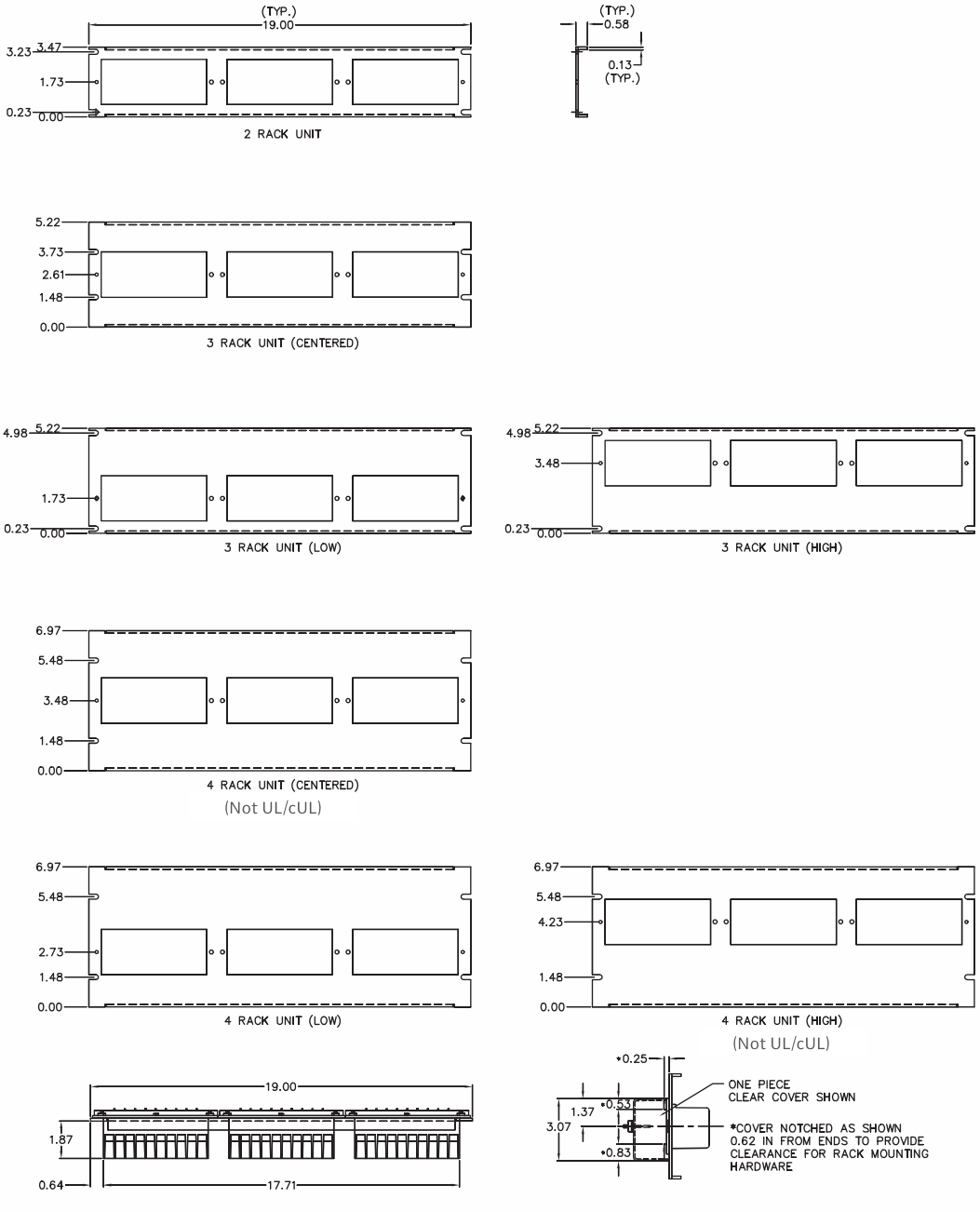

FT & RT Configuration Selection Chart

Individual FT Switch Number	Poles			Switch Configuration P=Potential *C=Current (Non-Shorting) * C-C=Current (Shorting)										Test Plug Number
	Total	V	A	**A**	**B**	**C**	**D**	**E**	**F**	**G**	**H**	**I**	**J**	
-001	2	2	0	P	P									TP-109
-002	2	2	0				P			P				TP-109
-003	2	0	2		C----------C									TP-106
-004	2	0	2						C----------C					TP-107
-005	2	0	2								C----------C			TP-101
-006	4	4	0	P	P	P							P	TP-109
-007	4	4	0	P	P							P	P	TP-109
-008	4	4	0	P							P	P	P	TP-109
-009	4	4	0			P	P	P	P					TP-109
-010	4	2	2	P	P						C----------C			TP-101
-011	4	2	2	P							C----------C		P	TP-101
-012	4	0	4		C----------C		C----------C							TP-108
-013	4	0	4						C----------C		C----------C			TP-102
-014	4	0	4		C	C	C	C						
-015	5	5	0	P	P						P	P	P	TP-109
-016	5	3	2	P	P						C----------C		P	TP-101
-017	5	3	2	P	C----------C		P						P	TP-108
-018	5	1	4		C	C		C		C			P	
-019	5	0	5	C		C		C		C		C		
-020	6	6	0	P	P	P						P	P	TP-109
-021	6	6	0	P	P	P					P	P	P	TP-109
-022	6	6	0				P	P	P	P	P	P		TP-109
-023	6	4	2	P					P	P	C----------C		P	TP-101
-024	6	3	3	P	P						C----------C		P	TP-102
-025	6	2	4	P					C----------C		C----------C		P	TP-102
-026	6	0	6	C		C		C			C	C	C	
-027	6	0	6		C----------C			C----------C			C----------C			
-028	6	0	6			C	C	C	C	C	C			
-029	6	0	6				C----------C		C----------C		C----------C			TP-103
-030	6	0	6				C	C	C	C	C	C		
-031	7	7	0	P	P	P	p			P	P	P		TP-109
-032	7	7	0	P	P	P	P				P	P	P	TP-109
-033	7	7	0		P	P	P	P	P	P	P			TP-109
-034	7	7	0	P			P	P	P	P	P	P		TP-109
-035	7	7	0	P			P	P	P		P	P	P	TP-109
-036	7	5	2	P	P	P	P	P			C----------C			TP-101
-037	7	5	2	P	P		P		C----------C		P	P	P	TP-107
-038	7	5	2	P	C----------C		P				P	P	P	TP-106
-039	7	4	3	P	P	C		C		C		P	P	TP-113
-040	7	3	4	P	P	P			C----------C		C----------C			TP-102
-041	7	3	4	P	P				C----------C		C----------C		P	TP-102
-042	7	3	4	P	C	C		C		C		P	P	
-043	8	8	0	P	P	P	P	P			P	P	P	TP-109
-044	8	8	0	P	P	P	P			P	P	P	P	TP-109
-045	8	8	0	P			P	P	P	P	P	P	P	TP-109
-046	8	6	2	P	P	P	P	P			C----------C		P	TP-101
-047	8	6	2	P	P	P			C----------C		P	P	P	TP-106
-048	8	4	4	P	P	P	P		C----------C		C----------C			TP-102
-049	8	4	4	P	P		C	C	C	C		P	P	
-050	8	4	4	P	P		C----------C		C----------C			P	P	TP-110

FT & RT Configuration Selection Chart

Individual FT Switch Number	Poles			Switch Configuration P=Potential *C=Current (Non-Shorting) * C-C=Current (Shorting)										Test Plug Number
	Total	V	A	A	B	C	D	E	F	G	H	I	J	
-051	8	4	4	p	C----------C		P			P	C------=------C		P	TP-105
-052	8	4	4			P	P	P	C------=------C		C------=------C		P	TP-102
-053	8	2	6		C----------C		C------=------C		C------=------C		P	P		TP-108
-054	8	2	6		C----------C		C------=------C		C------=------C			P	P	TP-108
-055	8	1	7	p		C	C------=------C		C------=------C		C------=------C			TP-111
-056	8	0	8	C	C	C	C			C	C	C	C	
-057	8	0	8		C	C	C	C	C	C	C	C		
-058	8	0	8		C------=-------C		C------=------C		C------=------C		C------=------C			TP-111
-059	9	9	0	P	P	P	P		P	P	P	P	P	TP-109
-060	9	9	0	P	P		P	P	P	P	P	P	P	TP-109
-061	9	6	3	P	P	P	P	P		C------=------C		C	P	
-062	9	5	4	P	P	P	P	P	C------=------C		C------=------C			TP-102
-063	9	5	4	P	P	P	P		C------=------C		C------=------C		P	TP-102
-064	9	3	6	P	P		C------=------C		C------=------C		C------=------C		P	TP-103
-065	9	0	9	C	C-------=-------C		C----------C		C------=------C		C------=------C			
-066	10	10	0	P	P	P	P	P	P	P	P	P	P	TP-109
-067	10	9	1	C	P	P	P	P	P	P	P	P	P	
-068	10	8	2	P	P	P	P	P	P	P	C------=------C		P	TP-101
-069	10	7	3	P	P	P	P	P	P	C	C------=------C		P	
-070	10	6	4	P	P	P	P	P	C------=------C		C------=------C		P	TP-102
-071	10	6	4	P	P	P	C------=------C		P	P	C------=------C		P	TP-104
-072	10	6	4	P	C-------=-------C		P	P	P	P	C------=------C		P	TP-105
-073	10	6	4	C--------=------C		C-----=------C		P	P	P	P	P	P	
-074	10	4	6	P	P	P	C------=------C		C------=------C		C------=------C		P	TP-112
-075	10	4	6	P	C------=-------C		P	C------=------C		P	C------=------C		P	
-076	10	3	7	P	P	C	C------=------C		C------=------C		C------=------C		P	TP-111
-077	10	2	8	P	C	C	C	C	C	C	C	C	P	
-078	10	2	8	P	C-------=-------C		C------=------C		C------=------C		C------=------C		P	TP-111
-079*	10	2	8	C---------=------C		C------=------C		C------=------C		C------=------C *		P	P	
-080	10	1	9	C	C	C	C	C	C	C	C	C	P	
-081	10	0	10	C	C	C	C	C	C	C	C	C	C	
-082	10	0	10	C---------=------C		C------=------C		C------=------C		C------=------C		C------=------C		
-083	10	10	0	T	T	T	T	T	T	T	T	T	T	
-084	10	4	6	P	P	P	P	C------=------C		C------=------C		C------=------C		
-085	10	2	8	C---------=------C		C------=------C		C------=------C		C------=------C		P	P	
-086	10	3L	7	L	C-------=------C		L	C------=------C		L	C------=------C		C	
-087	10	4	6	P	P	P	C------=------C		C------=------C		C------=------C		T	TP-112
-088														
-089	10	2	8	P	P	C------=------C		C------=------C		C------=------C		C------=------C			
-090	10	0	10	C	C-------=------C		C------=------C		C------=------C		C------=------C		C	
-091	9	9	0	P	P	P	P	P	P		P	P	P	TP-114
-092	8	2	6	C	C	C	C	C	C	P	P			
-092	8	2	6	C	C	C	P	P	P					
-093	6	6	0	P	P	P	P	P	P					TP-114
-094	6	4	2	P	P	P	C----------C		P					TP-115
-095	8	0	8	C----------=-----C				C------=------C		C------=------C		C------=------C		
-096	9	3	6	P	P	P	C------=------C		C------=------C			C	C	
-097	9	3	6	P	P	P	C------=------C		C------=------C		C------=------C			
-098	10	4	6	C---------=------C		C------=------C		C------=------C		P	P	P	P	
-099	10	4	6	C---------=------C		C------=------C		C------=------C		T	T	T	T	
-100	10	10	0	P	P	P	P	P	P	P	P	T	T	

FT & RT Configuration Selection Chart

Individual FT Switch Number	Poles			Switch Configuration P=Potential *C=Current (Non-Shorting) * C-C=Current (Shorting)										Test Plug Number
	Total	V	A	A	B	C	D	E	F	G	H	I	J	
-101	10	10	0	T	T	P	P	P	P	P	P	P	P	
-102	10	0	10	R----------R		R----------R		R----------R		R----------R		R----------R		
-103	9	9	0	T	T	T	T		T	T	T	T	T	TP-109
-104	10	8	2	P	P	P	P	P	P	C----------C		P	P	
-105	7	0	7			C	C----------C		C----------C		C----------C			
-106	3	3	0	T				T					T	
-107	10	4	6	P	P	P	C----------C		C----------C		C----------C		T	
-108	9	3	6	P	P	P	C----------C		C----------C		C----------C			
-109	2	2	0	T									T	
-110	6	0	6	C----------C		C----------C		C----------C						
-111	10	10	0	P	P	P	P	P	P	P	T	P	T	TP-109
-112	10	10	0	P	P	P	P	P	P	P	P	P	T	TP-109
-113	10	2	8	T	C----------C		C----------C		C----------C		C----------C		T	TP-111
-114	10	10	0	T	T	T	T	T	T	T	T	T	T	TP-109
-115	6	6	0	T	T	T	T					T	T	TP-109
-116	10	10	0	P	P	P	T	T	P	P	P	P	P	TP-109
-117	10	10	0	P	P	P	P	P	P	T	T	P	P	TP-109
-118	10	2	8	C----------C		C----------C		C----------C		C----------C		T	T	
-119	10	2	8	P	C----------C		C----------C		C----------C		C----------C		T	TP-111
-120	8	8	0	T	T	P	P			P	P	P	P	TP-109
-121	10	10	0	T	T	P	P	P	P	P	P	T	T	TP-109
-122	10	6	4	P	P	C	P	C	P	C	P	C	P	TP-111
-123	7	7	0	T	T	P	P				P	P	P	TP-109
-124	10	2	8	T	T	C----------C		C----------C		C----------C		C----------C		
-125	4	4	0	T	T	T							T	TP-109
-126	10	6	4	C----------C		C----------C		T	T	T	T	T	T	
-127	6	6	0				T	T	T	T	T	T		TP-109
-128	10	4	6	P	P	P	R----------R		R----------R		R----------R		P	TP-112
-129	10	10	0	O	O	O	O	O	O	O	O	O	O	TP-109
-130	10	2	8	C----------C----------C----------C				C----------C----------C			B	P	P	
-131	10	4	6	P	P	P	P	R----------R		R----------R		R----------R		
-132	10	4	6	P	P	P	P	O	O	O	O	O	O	
-133	10	6	4	R	R	R	R	P	P	P	B	P	P	
-134	6	6	0					P	P	P	P	P	P	
-135	10	2	8	R	R	R	R	P	P	R	R	R	R	
-136	10	10	0	P	P	P	P	P	P	P	P	T	T	
-137	8	0	8	R	R	R	R			R	R	R	R	
-138	8	4	4	P	P		R	R	R	R		P	P	
-139	6	6	0	T	T	T	T					T	T	
-140	10	0	10	R	R	R	R	R	R	R	R	R	R	
-141	10	2	8	P	P	R----------R		R----------R		R----------R		R----------R		
-142	4	0	4		R	R	R	R						
-143	10	10	0	P	P	P	P	P	P	P	T	T	T	
-144	10	8	2	C----------C		T	T	T	T	T	T	T	T	
-145	10	1	9	C----------C		C----------C		C----------C		C	C----------C		T	
-146	10	4	6	P	P	T	C----------C		C----------C		C----------C		T	
-147	10	10	0	p	P	P	P	T	T	T	T	T	T	
-148	4	4	0				P----------P----------P----------P							
-149	10	10	0	T----------T		T	T	T	T	T	T	T	T	
-150	10	10	0	P	P	P	P	T	T	T	T	P	P	

FT & RT Configuration Selection Chart

Individual FT Switch Number	Poles			Switch Configeation P=Potential *C=Current (Non-Shorting) * C-C=Current (Shorting)										Test Plug Number
	Total	V	A	A	B	C	D	E	F	G	H	I	J	
-151	10	10	0	P	T	P	P	T	P	P	T	P	P	
-152	10	2	8	P	C----------C		C----------C		C----------C		C----------C		P	TP-111
-153	10	3	7	P	P	C	C----------C		C----------C		C----------C		T	TP-111
-154	10	4	6	P	C----------C		C----------C		C----------C		P	P	P	
-155	10	10	0	P	T	P	P	P	P	P	P	P	T	
-156	10	10	0	P	T	P	P	P	P	P	P	T	T	
-157	10	10	0	P	T	P	P	P	P	P	T	T	T	
-158	10	10	0	P	T	T	P	P	P	P	P	T	T	
-159	10	10	0	P	T	T	P	P	P	P	T	T	T	
-160	10	10	0	P	T	T	P	P	P	T	T	T	T	
-161	10	10	0	P	T	T	P	P	T	T	T	T	T	
-162	10	10	0	P	T	T	P	T	T	T	T	T	T	
-163	10	10	0	P	T	T	T	T	P	T	T	T	T	
-164	10	10	0	P	T	T	T	T	T	T	T	T	T	
-165	10	10	0	P	T	P	P	T	P	P	P	P	T	
-166	10	10	0	P	T	T	T	T	P	P	P	P	P	
-167	8	0	8		R----------R		R----------R		R----------R		R----------R			TP-111
-168	8	4	4			R	P	R	P	R	P	R	P	
-169	10	8	2	C----------C		P	P	P	P	P	P	P	P	
-170	10	2	8	T	R----------R		R----------R		R----------R		R----------R		T	TP-111
-171	10	10	0	Y	Y	Y	Y	Y	Y	Y	Y	Y	Y	TP-109
-172	10	1	9	C----------C		C----------C		C----------C		C	C----------C		P	
-173	10	10	0	P	P	T	T	T	T	T	T	P	P	
-174	10	10	0	P	P	T	T	T	T	T	T	T	T	
-175	10	10	0	O	O	O	O	O	Y	Y	Y	Y	Y	TP-109
-176	5	1	4		C		C	P	C		C			TP-109
-177	10	6	4	C----------C		T	P	P	P	T	P	C----------C		
-178	10	4	6	T	T	T	T	C----------C		C----------C		C----------C		
-179	10	10	0	P	T	P	P	P	P	P	P	T	P	TP-109
-181	10	0	10	C----------C----------C----------C				C----------C----------C----------C				C----------C		
-182	10	0	10	C----------C		C----------C		C----------C		C----------C----------C----------C				
-183	10	4	6	C----------C----------C----------C				P	P	P	P	C----------C		
-184	10	10	0	B	B	B	B	B	B	B	B	T	P	TP-109
-185	10	10	0	T	T	T	T	T	T	P	P	P	P	TP-109
-186	10	10	0	T	T	T	T	P	P	P	P	P	P	TP-109
-187	10	4	6	T	T	T	C----------C		C----------C		C----------C		T	TP-112
-188	10	4	6	C----------C		C----------C		C----------C		P	P	P	T	
-189	10	4	6	T	C----------C		T	C----------C		T	C----------C		T	
-190	10	6	4	P	P	P	P	P	P	C----------C----------C----------C				

P = POTENTIAL- black handle
T = POTENTIAL- red handle
C = Current Non-shorting - black handle
R = Current Non-shorting - red handle
C-C = Current shorting - black handle
R-R = Current shorting - red handle
O = POTENTIAL- orange handle

Y = POTENTIAL- yellow handle
G = POTENTIAL- green handle
B = POTENTIAL- blue handle
W = POTENTIAL- white handle
CO = Current Non-shorting - orange handle
CY = Current Non-shorting - yellow handle
CG = Current Non-shorting - green handle

CB = Current Non-shorting - blue handle
CW = Current Non-shorting - White handle
CO-CO = Current shorting - orange handle
CY-CY = Current shorting - yellow handle
CG-CG = Current shorting - green handle
CB-CB = Current shorting - blue handle
CW-CW = Current shorting - white handle

* = Short Circuit without Jaw or Blade at position "H"
= FT-079 and FT-085 *Appear similar except that FT-079 is Short Circuit without Jaw or Blade at position "H"

Note: Selection Chart does not include all possible configurations

GEGridSolutions.com

Grid-AIS-L4-ITI_Model_FT/RT_Switch-1575-2017_08-EN. © Copyright 2018. General Electric Company and Instrument Transformers LLC reserve the right to change specifications of described products at any time without notice and without obligation to notify any person of such changes.

Worldwide Contact Center
Web: www.GEGridSolutions.com/contact
Phone: +44 (0) 1785 250 070
USA and Canada: +1 (0) 800 547 8629
Europe, Middle East and Africa: +34 (0) 94 485 88 00

Hirschmann Part # SPIDER-SL-20-01T1M29999SY9HHHH

HIRSCHMANN
A BELDEN BRAND

Product information
SPIDER III - SPIDER-SL-20-01T1M29999SY9HHHH

Industrial Ethernet:Unmanaged Industrial Ethernet Switches:SPIDER III-Switches:SPIDER III

https://www.e-catalog.beldensolutions.com:443/link/57078-24455-49855-437329-498960/en/SPIDER-SL-20-01T1M29999SY9HHHH/uistate

Name	SPIDER III
	Unmanaged, Industrial ETHERNET Rail Switch, fanless design, store and forward switching mode, 10/100 Mbit/s Ethernet
Delivery informations	
Availability	available
Product description	
Description	Unmanaged, Industrial ETHERNET Rail Switch, fanless design, store and forward switching mode, 10/100 Mbit/s Ethernet
Port type and quantity	1x 10/100BASE-TX, TP cable, RJ45 sockets, auto-crossing, auto-negotiation, auto-polarity, 1 x 100BASE-FX, MM cable, SC sockets
Type	SPIDER-SL-20-01T1M29999SY9HHHH
Order No.	942 132-005
More Interfaces	
Power supply/signaling contact	1 x plug-in terminal block, 3-pin
Network size - length of cable	
Twisted pair (TP)	0 m ... 100 m
Multimode fiber (MM) 50/125 µm	0 - 5000 m (Link Budget at 1300 nm = 0 - 8 dB; A=1 dB/km; BLP = 800 MHz*km)
Multimode fiber (MM) 62.5/125 µm	0 - 4000 m (Link Budget at 1300 nm = 0 - 11 db; A = 1 dB/km; BLP = 500 MHz*km)
Network size - cascadibility	
Line - / star topology	any
Power requirements	
Operating voltage	12/24 V DC (9.6 - 32 V DC)
Current consumption at 24 V DC	Max. 83 mA
Power consumption	Max. 2.0 W, 7.0 Btu (IT) h
Ambient conditions	
Operating temperature	0 °C ... 60 °C
Storage/transport temperature	-40 °C ... 70 °C
Relative humidity (non-condensing)	0 % ... 95 %
MTBF (Telcordia)	2.705.181 hours; Telcordia SR-332; Gb 25°C
Mechanical construction	
Dimensions (W x H x D)	26 x 102 x 79 mm (w/o terminal block)
Mounting	DIN Rail
Weight	100 g
Protection class	IP30
Mechanical stability	
IEC 60068-2-27 shock	15 g, 11 ms duration, 18 shocks
IEC 60068-2-6 vibration	3.5 mm, 5–8.4 Hz, 10 cycles, 1 octave/min; 1 g, 8.4–150 Hz, 10 cycles, 1 octave/min
EMC interference immunity	
EN 61000-4-2 electrostatic discharge (ESD)	4 kV contact discharge, 8 kV air discharge
EN 61000-4-3 electromagnetic field	10 V/m (80-1000 MHz)
EN 61000-4-4 fast transients (burst)	2 kV power line, 4 kV data line
EN 61000-4-5 surge voltage	power line: 2 kV (line/earth), 1 kV (line/line), 1 kV data line
EN 61000-4-6 conducted immunity	10 V (150 kHz-80 MHz)
EMC emitted immunity	
FCC CFR47 Part 15	FCC 47 CFR Part 15 Class A
EN 55022	EN 55022 Class A
Service	
Diagnostics	LEDs (power, link status, data, data rate)

HIRSCHMANN
A BELDEN BRAND

Industrial Ethernet:Unmanaged Industrial Ethernet Switches:SPIDER III-Switches:SPIDER III https://www.e-catalog.beldensolutions.com:443/link/57078-24455-49855-437329-498960/en/SPIDER-SL-20-01T1M29999SY9HHHH/uistate	
Approvals	
Safety of industrial control equipment	UL61010-1/-2-201
Scope of delivery and accessories	
Scope of delivery	Device, terminal block, safety instruction
Accessories	Rail Power Supply RPS 30/80 EEC/120 EEC (CC), Wall mounting plate for DIN rail mounting 40mm - order nr. 942 177-001,wall mounting plate for DIN rail mounting 70mm - order nr. 942 177-002

For more information please contact:
Hirschmann Automation and Control GmbH
Stuttgarter Strasse 45-51
72654 Neckartenzlingen
Germany
Phone: +49 7127/14-1809
E-Mail: inet-sales@belden.com

The information published in the websites has been compiled as carefully as possible. It is subject to alteration without notice in technical as well as in price-related/commercial respect.
The complete information and data were available on user documentation. Mandatory information can only be obtained by a concrete query.

Hoffman Part # A903624FSG

FREE-STAND, SINGLE OR DUAL ACCESS, TYPE 12

INDUSTRY STANDARDS

UL 508A Listed; Type 12; File No. E61997
cUL Listed per CSA C22.2 No. 94; Type 12; File No. E61997

NEMA/EEMAC Type 12
E.I.A. RS310D
CSA, File No. 42186, Type 12
IEC 60529, IP55

APPLICATION

Available with front or front and rear access, these Type 12 enclosures have sturdy unibody construction and flexible internal mounting options.

SPECIFICATIONS

- 12 gauge steel
- Seams continuously welded and ground smooth; no holes or knockouts
- Stiffeners on back of two-door enclosures maintain flatness and increase rigidity
- Lifting eyes for easy handling
- 3-point latches operated by oil-tight key-locking handle
- Latch rod rollers for easy door closing
- Concealed, easy-to-remove hinges
- Data pockets are high-impact thermoplastic
- Internal mounting channels welded horizontally to sides at top, bottom and center
- Optional panels and rack mount angles can be mounted anywhere along channels
- Oil-resistant door gasket
- Bonding provision on door
- Provision for mounting fluorescent light

FINISH

Two finishes available: ANSI 61 gray, polyester powder paint outside and inside; or ANSI 61 gray outside and white, polyester powder paint inside. Optional panels available with a white or conductive finish.

ACCESSORIES

See also Accessories.
Plate Casters
Electric Heater
Door Stop Kit
Compact Cooling Fans
PANELITE™ Enclosure Lights Overview
See also the Popular Cooling Products and Accessories tables folliwng the Standard Products tables.

MODIFICATION AND CUSTOMIZATION

Hoffman excels at modifying and customizing products to your specifications. Contact your local Hoffman sales office or distributor for complete information.

BULLETIN: A30

Hoffman Part # A903624FSG

Standard Product **One-Door Single-Access**

Catalog Number	AxBxC in.	AxBxC mm	Interior Finish	F (in.)	F (mm)	G (in.)	G (mm)	Number of Lifting Eyes	Number of Rack Units
A602418FSG	60.06 x 24.06 x 18.06	1526 x 611 x 459	Gray	32.03	814	23.12	587	2	28
A602418FS	60.06 x 24.06 x 18.06	1526 x 611 x 459	White	32.03	814	23.12	587	2	28
A722418FSG	72.06 x 24.06 x 18.06	1830 x 611 x 459	Gray	38.03	966	29.12	740	2	35
A722418FS	72.06 x 24.06 x 18.06	1830 x 611 x 459	White	38.03	966	29.12	740	2	35
A723018FSG	72.06 x 30.06 x 18.06	1830 x 764 x 459	Gray	38.03	966	29.12	740	2	35
A723018FS	72.06 x 30.06 x 18.06	1830 x 764 x 459	White	38.03	966	29.12	740	2	35
A723618FSG	72.06 x 36.06 x 18.06	1830 x 916 x 459	Gray	38.03	966	29.12	740	2	35
A723618FS	72.06 x 36.06 x 18.06	1830 x 916 x 459	White	38.03	966	29.12	740	2	35
A902420FSG	90.06 x 24.06 x 20.06	2288 x 611 x 510	Gray	47.03	1195	38.12	968	2	45
A902420FS	90.06 x 24.06 x 20.06	2288 x 611 x 510	White	47.03	1195	38.12	968	2	45
A903620FSG	90.06 x 36.06 x 20.06	2288 x 916 x 510	Gray	47.03	1195	38.12	968	2	45
A903620FS	90.06 x 36.06 x 20.06	2288 x 916 x 510	White	47.03	1195	38.12	968	2	45
A603624FSG	60.06 x 36.06 x 24.06	1526 x 916 x 611	Gray	32.03	814	23.12	587	2	28
A603624FS	60.06 x 36.06 x 24.06	1526 x 916 x 611	White	32.03	814	23.12	587	2	28
A722424FSG	72.06 x 24.06 x 24.06	1830 x 611 x 611	Gray	38.03	966	29.12	740	2	35
A722424FS	72.06 x 24.06 x 24.06	1830 x 611 x 611	White	38.03	966	29.12	740	2	35
A723024FSG	72.06 x 30.06 x 24.06	1830 x 764 x 611	Gray	38.03	966	29.12	740	2	35
A723024FS	72.06 x 30.06 x 24.06	1830 x 764 x 611	White	38.03	966	29.12	740	2	35
A723624FSG	72.06 x 36.06 x 24.06	1830 x 916 x 611	Gray	38.03	966	29.12	740	2	35
A723624FS	72.06 x 36.06 x 24.06	1830 x 916 x 611	White	38.03	966	29.12	740	2	35
A903624FSG	90.06 x 36.06 x 24.06	2288 x 916 x 611	Gray	47.03	1195	38.12	968	2	45
A903624FS	90.06 x 36.06 x 24.06	2288 x 916 x 611	White	47.03	1195	38.12	968	2	45
A723630FSG	72.06 x 36.06 x 30.06	1830 x 916 x 764	Gray	38.03	966	29.12	740	4	35
A723630FS	72.06 x 36.06 x 30.06	1830 x 916 x 764	White	38.03	966	29.12	740	4	35
A723636FSG	72.06 x 36.06 x 36.06	1830 x 916 x 916	Gray	38.03	966	29.12	740	4	35
A723636FS	72.06 x 36.06 x 36.06	1830 x 916 x 916	White	38.03	966	29.12	740	4	35
A903636FSG	90.06 x 36.06 x 36.06	2288 x 916 x 916	Gray	47.03	1195	38.12	968	4	45
A903636FS	90.06 x 36.06 x 36.06	2288 x 916 x 916	White	47.03	1195	38.12	968	4	45

Four lifting eyes are furnished if C = 30.06 (764mm) or more.

Removable 12.00 x 12.00 (305mm x 305mm) data pocket included.

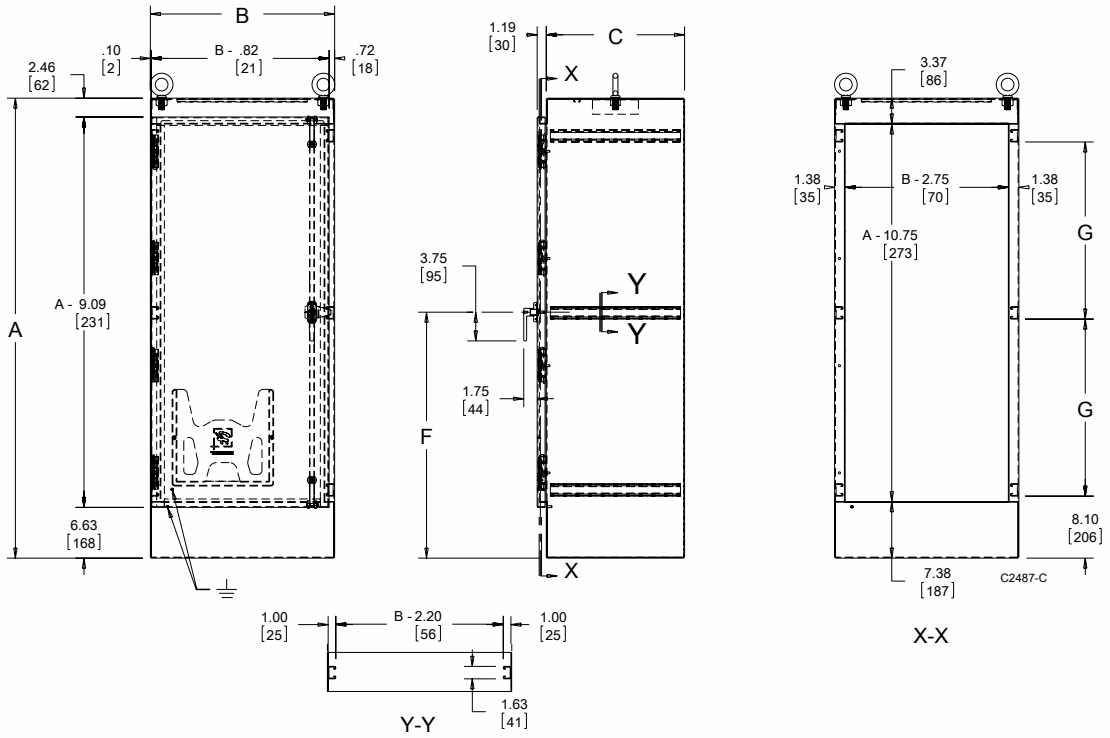

Notes

Hoffman Part # N280416G151

nVent | HOFFMAN

SPECTRACOOL NARROW INDOOR/OUTDOOR

N43	N36	N28
11000 BTU/Hr.	6000/8000 BTU/Hr.	4000 BTU/Hr.
3223 Watt	1758/2344 Watt	1172 Watt

INDUSTRY STANDARDS

UL/cUL Listed; Type 12, 3R, 4; 4X optional; File No. SA6453

CE
IP 56 Internal Loop
IP 34 on External Loop
Telcordia GR-487 capable (Outdoor)

APPLICATION

- Industrial automation
- Waste water treatment systems
- Package handling equipment
- Security and defense systems

FEATURES

- Narrow design accommodates 12-in. (300-mm) deep cabinets
- Energy efficient reciprocating compressor on N28 models
- Energy efficient rotary compressor on N36 and N43 models
- R407c and R134a earth-friendly refrigerants
- Models for 115, 230 and 400/460 3-phase VAC power input
- UL Listed to save customers time and money with agency approvals
- Outdoor model operating temperature range from -40 F/-40 C to 131 F/55 C (125 F/52 C on N28 Series)
- Attractive industrial design with minimal use of visible fasteners
- Reliable mechanical thermostat on enclosure side of the unit; indoor Air Conditioner models include digital display on ambient side
- Galvanized sheet-metal cover for rugged factory and outdoor environments
- Easy-mount flanges for simple installation
- Cut-out adapter options for enclosures with GENESIS air conditioners enable users to easily transition to the new unit
- Dust-resistant condenser coil allows the unit to be run filterless in most applications
- Cleanable, reusable aluminum mesh filter protects coils for maximum cooling performance
- Mounting hardware, gaskets and user manual furnished with the unit
- Every unit functionally tested before shipping
- Standard Indoor Air Conditioner models also include:
  - Active condensate management with heater strip
  - Power-off relay for door switch and other system requirements
  - Malfunction switch
- Standard Outdoor Air Conditioner models also include:
  - Telcordia GR-487 capable
  - Corrosion-resistant components
  - Malfunction switch
  - Compressor heater
  - Head pressure control
  - 1300 W enclosure heater

SPECIFICATIONS

- Nominal cooling capacity:
  N28 4000 BTU/Hr. (1172 W)
  N36 6000 & 8000 BTU/Hr. (1758 and 2344 W)
  N43 11000 BTU/Hr. (3223 W)
- Outdoor model operating temperature range from -40 F/-40 C to 131 F/55 C (125 F/52 C on N28 Series)

FINISH

- RAL 7035 light-gray, semi-textured powder-coat paint
- Other colors and textures available

EtherNet/IP ODVA PI PROFIBUS • PROFINET

Hoffman Part # N280416G151

SEALED ENCLOSURE COOLING AIR CONDITIONERS

nVent | HOFFMAN

Performance Data **N28 4000 BTU/Hr. (1172 Watt)**

CATALOG NUMBER			
Indoor Model	N280416G050	N280426G050	N280446G050
Indoor Model Stainless Steel Type 4X	N280416G051	N280426G051	N280446G051
Indoor Model with Remote Access Control*	N280416G060	N280426G060	N280446G060
Outdoor Model without Heat Pkg.	N280416G100	N280426G100	N280446G100
Outdoor Model with Heat Pkg.	N280416G150	N280426G150	—
Outdoor Model with Heat Pkg. Stainless Steel Type 4X	N280416G151	N280426G151	N280446G151
COOLING PERFORMANCE			
Nominal:			
BTUs/Hr.	**3800 / 4000**	**3800 / 4000**	**3800 / 4000**
Watts	**1114 / 1172**	**1114 / 1172**	**1114 / 1172**
At 125 F / 125 F (50 C / 50 C):			
BTU/Hr. (50 / 60 Hz)	3940 / 4104	4269 / 4703	4269 / 4703
Watts (50 / 60 Hz)	1150 / 1000	1250 / 1378	1250 / 1378
At 95 F / 95 F (35 C / 35 C):			
BTU/Hr. (50 /60 Hz)	3754 / 4011	3700 / 4291	3700 / 4291
Watts (50 / 60 Hz)	1100 / 1175	1086 / 1257	1086 / 1257
Refrigerant	R134a	R134a	R134a
Refrigerant Charge (ounces/grams)	10 / 283	11 / 312	11 / 312
Operating Temperature Range:			
Maximum (°F / °C)	125 / 52	125 / 52	125 / 52
Minimum (°F / °C)	-40 / -40	-40 / -40	-40 / -40
Air Flow at 0 Static Pressure:			
Internal loop 50 Hz (CFM / M^3/Hr)	138 / 234	138 / 234	138 / 234
External loop 50 Hz (CFM / M^3/Hr)	268 / 455	268 / 455	268 / 455
Internal loop 60 Hz (CFM / M^3/Hr)	143 / 243	143 / 243	143 / 243
External loop 60 Hz (CFM / M^3/Hr)	288 / 489	288 / 489	288 / 489
Max. Heater W (Outdoor Models)	1300	1300	N/A
ELECTRICAL DATA			
Rated Voltage	**110 / 115**	**230**	**460V 1PH**
Frequency (Hz)	50 / 60	50 / 60	50 / 60
Operating Range	+/-10%	+/-10%	+/-10%
Max. Power Consumption (Watts at 50 / 60 Hz)	971 / 1116	975 / 1104	1104
Max. Nominal Current (Amps at 50 / 60 Hz)	10.1/11.2	4.9 / 5.0	2.5
Starting Current (Amps)	40	24.5	12.5
Agency Approvals		cUL Listed CE Others available upon request	
Power Input Description		Terminal Block	
ENCLOSURE PROTECTION			
UL Type		Type 12, 3R, 4 Standard Type 4X Stainless Steel Optional	
CONTROLLER			
Description		Basic Mechanical Thermostat	
Thermostat Location		Enclosure Side	
Factory Thermostat Setting (°F / °C)		80 / 27	
SOUND LEVEL			
At 1.5 Meters	64.4 dBA	65.5 dBA	65.5 dBA
UNIT CONSTRUCTION			
Material		Galvanized sheet metal standard Stainless steel optional	
Finish		RAL 7035 light-gray, semi-textured powder-coat paint standard Other colors available	
ACCESSORIES			
EASYSWAP Adaptor Plenum (GENESIS M33)		Enables SPECTRACOOL to be mounted to a GENESIS M33 air conditioner cutout Catalog Number PLM33N28	
UNIT DIMENSIONS			
Height (in / mm)		28 / 711.2	
Width (in / mm)		11.50 / 292.1	
Depth (in / mm)		14.00 / 355.6	
Weight (lb / kg)	84 / 38	84 / 38	92 / 41.7

*Units with Remote Access Control utilize a digital controller and communicate via EtherNet/IP, Profinet, Modbus TCP/IP and SNMP over ethernet or modbus RTU over USB.

Performance Curves for N28 Models 4000 BTU/Hr. (1172 Watt)

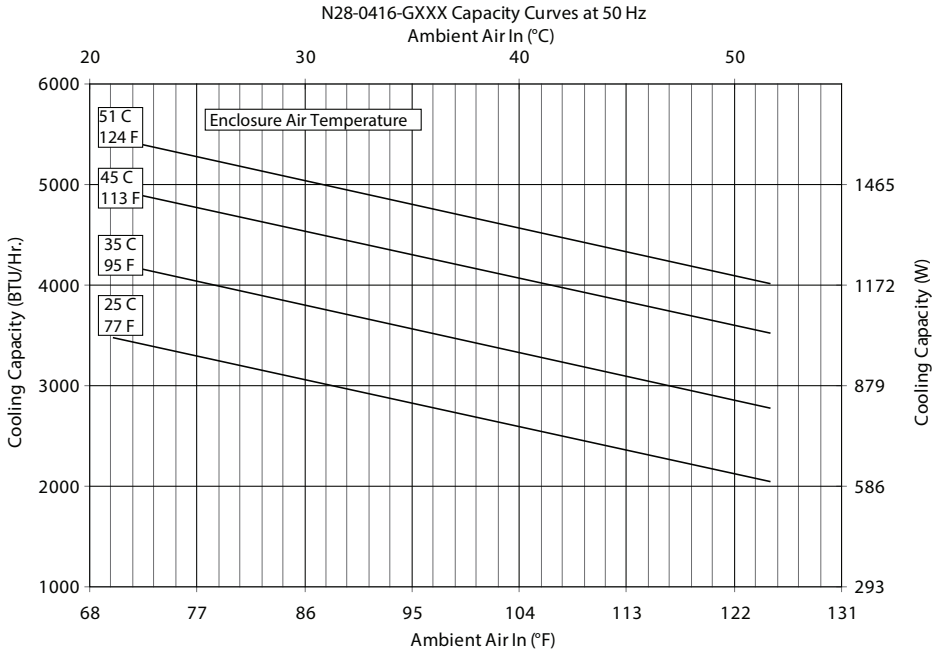

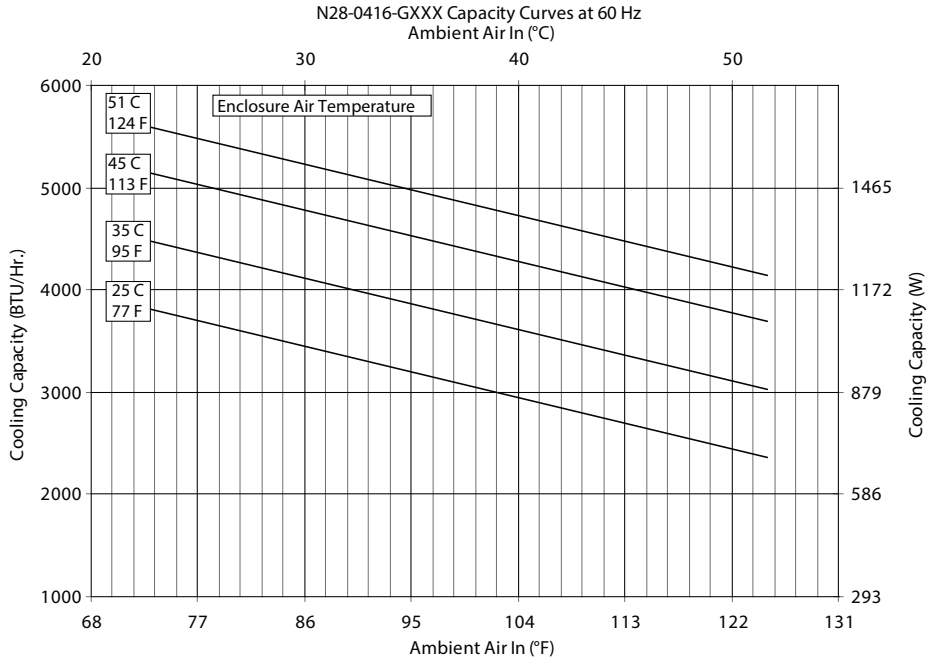

Performance Curves for N28 Models 4000 BTU/Hr. (1172 Watt)

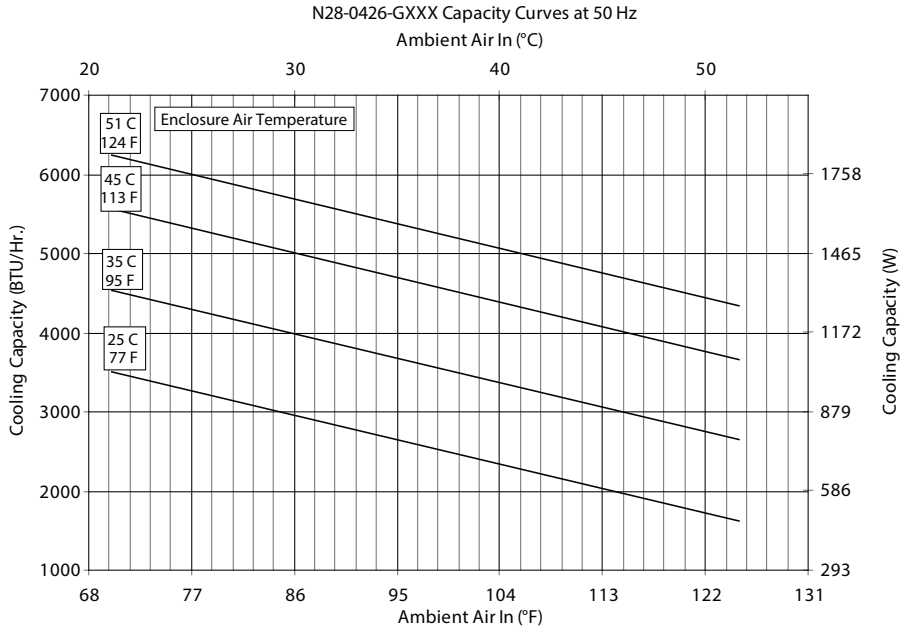

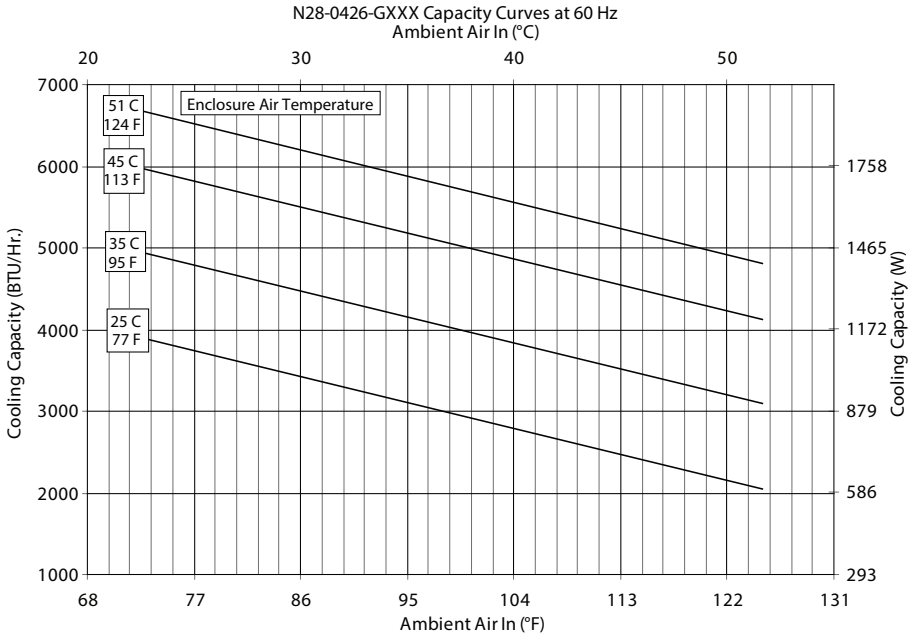

N28 Models 4000 BTU/Hr. (1172 Watt)

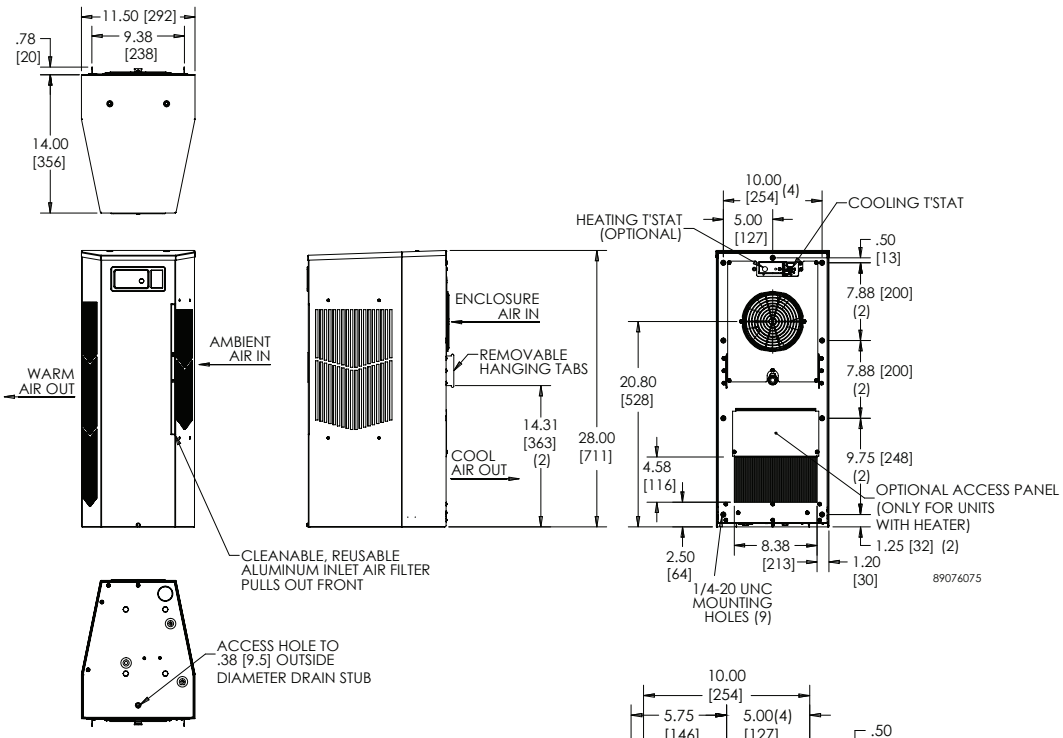

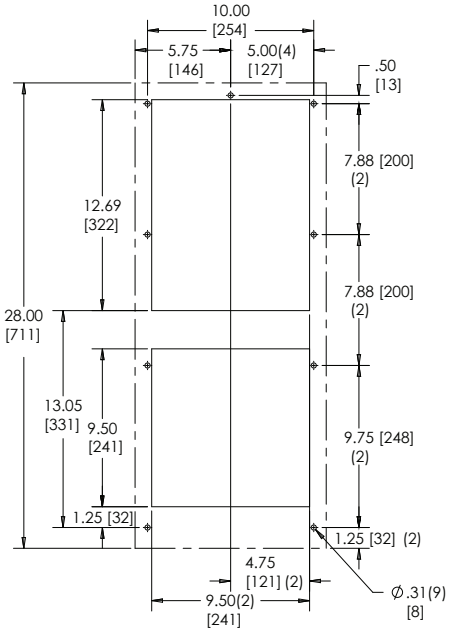

Cutout Dimensions

Visit www.nVent.com/HOFFMAN to download 2D and 3D CAD drawings into the overall design of your electrical system.

Kepware EX5-MDBUS-NA00

EX5-MDBUS-NA00 Server Suite

Description

Kepware Modbus OPC Server Suite

Kepware's Modbus OPC Server Suite works in conjunction with KEPServerEX OPC Server to provide OPC Data Access to Modbus compatable devices. The intuitive user interface of KEPServerEX allows you to set up reliable Modbus connections easily. The Modbus suite of drivers provides access to multiple Modbus networks all from a single license.

Device Connectivity - Supported Devices/Networks

- TCP/IP Ethernet (Master/Slave)
- RTU Serial (Master/Slave)
- ASCII Serial
- Modbus Plus
- Enron
- Omni
- Daniel
- Instromet
- Dynamic Fluid Meters
- Roxar RFM
- Elliot
- Mailbox
- Elliot
- Fluenta FGM
- DGH DAQ

Features - For real world applications

- Zero-based & One-based Addressing
- Adjustable Block Reads (1-125)
- Byte Order Swapping - Modbus or Intel
- Holding Register Bit Mask Writes
- "Modified" Modbus support (flow computers)
- Dial-up Modem Support
- Automatic Tag Database Generation
- Ethernet Encapsulation (for Serial drivers)
- Modbus TCP Framing for RTU Serial
- Support for Modbus TCP or UDP enabled devices
- Multi-Threaded Design - Windows Sockets
- Write Optimization and Error Recovery

Modicon Part # 170ADM85010

Product data sheet
Characteristics

170ADM85010
discrete I/O module Modicon Momentum - 16 I/O relay

Product availability : Stock - Normally stocked in distribution facility

Main

Range of product	Modicon Momentum automation platform
Product or component type	Discrete relay I/O base DC
Group of channels	1 group of 16 outputs 1 group of 16 inputs
Discrete input number	16 IEC 1131-2 Type 3
Discrete input logic	Positive
Discrete input voltage	12 V DC 24 V DC 48 V DC
Discrete output number	16
Discrete output type	Solid state switch
Discrete output voltage	<= 60 V DC 12 V DC 24 V DC 48 V DC
Discrete output logic	Positive
Protective treatment	TC

Complementary

[Us] rated supply voltage	12 V DC 24 V DC 48 V DC
Input voltage limits	10...60 V
Voltage state 0 guaranteed	< 10 V 48 V < 2.5 V 12 V < 5 V 24 V
Voltage state 1 guaranteed	> 11 V 24 V > 30 V 48 V > 7.5 V 12 V

Disclaimer: This documentation is not intended as a substitute for and is not to be used for determining suitability or reliability of these products for specific user applications

Modicon Part # 170ADM85010

Current state 1 guaranteed	2.3 mA 12 V 2.7 mA 24 V 2.9 mA 48 V
Discrete output current	0.5 A per point 7 A 140 °F (60 °C) per module 8 A 122 °F (50 °C) per group
Leakage current	< 1 mA 60 V output circuit
Peak output current	5 A
Voltage drop	< 1 V 0.5 A at state 1 output circuit
Fault type	Overload on output
Response time	< 0.1 ms from state 0 to state 1 on output < 0.1 ms from state 1 to state 0 on output 2.2 ms from state 0 to state 1 on input 3.3 ms from state 1 to state 0 on input
Isolation between group of I/O channels	707 V DC
Isolation between channels and bus	707 V DC
Power dissipation	6.0 + (0.144 x number of input points) + (0.25 x number of output points)
Current consumption	125 mA 48 V DC 250 mA 24 V DC 500 mA 12 V DC
Depth	1.87 in (47.5 mm)
Height	5.57 in (141.5 mm)
Width	4.92 in (125 mm)

Environment

Product certifications	CSA UL FM Class 1 Division 2
Resistance to electrostatic discharge	4 kV contact IEC 801-2 8 kV on air IEC 801-2
Resistance to electromagnetic fields	9.14 V/yd (10 V/m) 80...1000 MHz IEC 801-3
Ambient air temperature for operation	32...140 °F (0...60 °C)
Ambient air temperature for storage	-40...185 °F (-40...85 °C)
Relative humidity	95 % without condensation
Operating altitude	<= 16404.2 ft (5000 m)

Ordering and shipping details

Category	18206 - MOMENTUM PROCESSORS,I/O BASES,CONN.
Discount Schedule	PC31
GTIN	00785901449584
Nbr. of units in pkg.	1
Package weight(Lbs)	1.02
Returnability	Y
Country of origin	FR

Offer Sustainability

Sustainable offer status	Green Premium product
RoHS (date code: YYWW)	Compliant - since 1350 - Schneider Electric declaration of conformity
REACh	Reference not containing SVHC above the threshold Reference not containing SVHC above the threshold
Product environmental profile	Available
Product end of life instructions	Available

Contractual warranty

Warranty period	18 months

Specifications

Overview

This section contains specifications for the 170AMM11030 Momentum I/O base.

General Specifications

The following table contains general specifications for the I/O base. Each discrete output is protected against short-circuiting and overload.

External Power Requirement	
Normal Operating Voltage Range	16 to 42 VDC
Absolute Minimum Voltage	12 VDC
Absolute Maximum Voltage	45 VDC
Electrical	
Module Current	400 mA at 24 VDC
EMC for Industrial Environment	
Immunity	IEC 1131-2 Surge on auxiliary power supply 500 V
Emissions	EN 50081-2
ENV 50140	10 V/M
Agency Approvals	UL, CSA, CE, FM Class 1, Div. 2 (pending)
Isolation	
Discrete I/O point to discrete I/O point	None
Field to ground	500 VAC
Field to communication adapter	500 VAC
Analog output channel to channel	700 VDC
Environmental	
Storage Temperature	-40 to 85° C
Operating Temperature	0 to 60° C
Humidity Operating	95% RH @ 60° C
Humidity Non-Operating	95% RH @ 60° C
Vibration Operating	10 - 57 HZ 0.075 MMDA 57 - 150 HZ 1 G
Shock Non-Operating	15 G, 11 MS, 3 shocks/axis
Free Fall (Unpackaged)	0.1 meter

Analog Inputs

The following table contains specifications for analog inputs.

Number of Channels	2
Input Ranges	± 10 VDC
Input Type	Single-ended
Resolution	14 bit
Surge Tolerance	
Voltage Input	± 30 VDC
Over-range Tolerance	5% full scale
Protection	Polarity inversion
Common Mode Rejection	250 VAC @ 47 to 63 HZ or 250 VDC channel to ground
Cross Talk Between Channels	± lowest significant bit
Common Mode Rejection Ration @ DC	± lowest significant bit
Common Mode Rejection Ration @ 50/60	± lowest significant bit
Maximum Input Signal	15 VDC for voltage input
Filtering	Low pass with cutoff frequency 900 Hz
Conversion Times	1.6 ms maximum for 2 input channels
Sampling Period	3.2 ms per channel
Range	± 10 VDC
Input Impedance	> 2.2 MOhm
Error @ 25°C	0.2% for full scale
Error @ 60°C	0.55% for full scale
Temperature Drift @ 60°C	100ppm full scale /°C

Analog Outputs

The following table contains specifications for analog outputs.

Number of Channels	2
Output Ranges	± 10 VDC
Resolution	14 Bit
Conversion Times	1.60 ms for all channels
Output Setting Time	3.2 ms to 0.1% of final value
Accuracy	Max. error @ 25°C ± 0.4% for -10 to +10 VDC
Linearity	± 1 LSB, Guaranteed Monotonic
Output Impedance	< 0.2 Ohms
Maximum Output Current	5 mA
Maximum Temperature Drift @ 60°C	± 100 ppm of full scale per °C
Data Format	Left justified
Crosstalk Between Channels	80 dB
Load	> 2K Ohms @ ±10 VDC
Channel to Channel Isolation	700 VDC

Discrete Inputs

The following table contains specifications for discrete inputs.

Operating Voltage	16 to 42 VDC
Absolute Minimum Voltage	12 VDC
Absolute Maximum Voltage	45 VDC
Number of Points	16
Number of Groups	1
Points per Group	16
Type of Signal	True high (sourcing)
IEC 1131 I/O Type @ 24 VDC	1+
Minimum ON Voltage	> 11 VDC
Maximum OFF Voltage	< 5 VDC
Input Operating Current	1.2 mA and lower, off 2.5 to 10 mA, on
Input Voltage	
Range	16 to +42 VDC
Surge	75 volt peak for 10 ms
Response Time	6.2 ms OFF to ON @ 24 VDC 7.3 ms ON to OFF @ 24 VDC

Discrete Outputs

The following table contains specifications for discrete outputs.

Description	Solid state switch
Operating Voltage	16 - 42 VDC
Absolute Minimum Voltage	12 VDC
Absolute Maximum Voltage	45 VDC
Maximum Voltage	50 VDC for 1 ms
Number of Points	8
Number of Groups	1
Points per Group	8
Current Capacity	250 mA per point 2 amps per module
Type of Signal	True high (sourcing)
Leakage Current	< 1 mA @ 42 VDC
Surge Current	5 amps for 1 ms
On State Voltage Drop	< 1.0 VDC max at 0.25 amp current
Fault Sensing	Overload and short circuit
Fault Reporting	System bit
Response Time	1.8 ms OFF to ON 1.8 ms ON to OFF

CAUTION

Discrete VDC outputs incorporate thermal shutdown and overload protection.

The output current of a shorted output is limited to a nondestructive value. The short circuit heats the output driver, and the output will switch off. The output will switch on again if the driver leaves the over temperature condition and the user resets the output under program control. If the short circuit still exists after the output point is reset, the driver will reach the over temperature condition again and will switch off again.

Failure to follow this precaution can result in injury or equipment damage.

Modicon Part # 171CBU98091

Product data sheet

Specifications

Unity M1E processor - RS232/485 - Ethernet - USB - I/O bus - global data

171CBU98091

Main

Range of Product	Modicon Momentum automation platform
Product or Component Type	Processor
Product Compatibility	Modicon STB I/O
Integrated connection type	USB port Ethernet

Complementary

Concept	Transparent Ready class B
Web services	Bandwidth monitoring Properties CPU status Ethernet statistics Home pages
Software Designation	Unity Pro
Communication service	Modbus messaging 125 words, 200 I/O message per second Global Data, 2200 I/O message per second Modbus TCP I/O Scanner and Messaging
Processor name	Spear 320s
Word length	32 bit
Supply voltage limits	4.75…5.25 V
Clock frequency	333 MHz
Topology	Multidrop Modbus Star Modbus TCP
Communication port protocol	Modbus RS485/RS232 - 1 RJ45 19200 bps - 2-wire Modbus TCP ETHERNET - 1 RJ45 10/100 Mbps - twisted shielded pairs cable CAT 5E UTP
Method of access	Client/server Master/slave
Control parameter	CRC-32 for Modbus TCP/IP CRC-16 for Modbus
Addressing	1...247 Modbus Unique IEEE global address Modbus TCP
Fail state	Safe I/O mode
Memory description	Program memory IEC 3584 kB Program memory LL984 3584 kB
Register words	26048
I/O limit processor capacity	2048 inputs/2048 outputs

Disclaimer: This documentation is not intended as a substitute for and is not to be used for determining suitability or reliability of these products for specific user applications

Number of devices	32 Modbus
Exact time for 1 Kinstruction	83 ns
Local signalling	for processor running (RUN) 1 LED (green) for processor or system fault (ERR) 1 LED (red) for I/O module fault (I/O) 1 LED (red) for channel 0 operating (CH0) 1 LED (yellow) for data rate (ETH 100) 1 LED (green) for data rate (ETH LINK) 1 LED (green) for status of Ethernet network (ETH STS) 1 LED (green)
Marking	CE
Current consumption	500 mA 5 V DC
Module format	Standard
Product mounting	35 mm symmetrical DIN rail
Height	2.39 in (60.6 mm)
Width	5.67 in (144 mm)
Depth	2.11 in (53.47 mm)
Net Weight	0.36 lb(US) (0.163 kg)

Environment

Material	Lexan
Dielectric strength	0 V not isolated RS485/RS232 5000 V for 1 minute ETHERNET
Product Certifications	C-tick FM
Standards	UL 508 CSA C22.2 No 142 EN/IEC 61131-2
IP degree of protection	IP20
Shock resistance	15 gn 11 ms sinusoidal vibrations
Resistance to electrostatic discharge	6 kV contact EN/IEC 61131-2 zone B 6 kV contact IACS E10 8 kV on air EN/IEC 61000-4-2
Resistance to electromagnetic fields	13.72 V/m (15 V/m) 80...2700 MHz EN/IEC 61000-4-3
Ambient air temperature for operation	32…140 °F (0…60 °C)
Ambient Air Temperature for Storage	-40…185 °F (-40…85 °C)
Relative humidity	5…96 %
Operating altitude	<= 6561.68 ft (2000 m)

Ordering and shipping details

Category	18206-MOMENTUM PROCESSORS,I/O BASES,CONN.
Discount Schedule	PC31
GTIN	3595864171401
Returnability	No
Country of origin	FR

Packing Units

Unit Type of Package 1	PCE
Number of Units in Package 1	1
Package 1 Height	2.95 in (7.500 cm)

Package 1 Width	4.41 in (11.200 cm)
Package 1 Length	8.07 in (20.500 cm)
Package 1 Weight	8.47 oz (240.000 g)
Unit Type of Package 2	S03
Number of Units in Package 2	8
Package 2 Height	11.81 in (30.000 cm)
Package 2 Width	11.81 in (30.000 cm)
Package 2 Length	15.75 in (40.000 cm)
Package 2 Weight	5.27 lb(US) (2.389 kg)

Offer Sustainability

Sustainable offer status	Green Premium product
California proposition 65	WARNING: This product can expose you to chemicals including: Lead and lead compounds, which is known to the State of California to cause cancer and birth defects or other reproductive harm. For more information go to www.P65Warnings.ca.gov
REACh Regulation	REACh Declaration
EU RoHS Directive	Pro-active compliance (Product out of EU RoHS legal scope) EU RoHS Declaration
Mercury free	Yes
China RoHS Regulation	China RoHS declaration
RoHS exemption information	Yes
Circularity Profile	End of Life Information
WEEE	The product must be disposed on European Union markets following specific waste collection and never end up in rubbish bins.

Product data sheet 171CBU98091

Dimensions Drawings

Processor and Option Adapter on a Typical Base

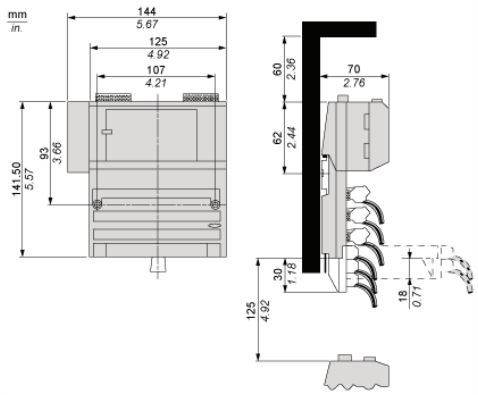

Life Is On Schneider Electric

Product data sheet
Mounting and Clearance

171CBU98091

Mounting on a Wall

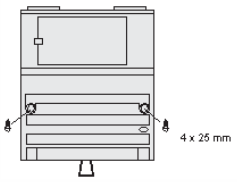

Recommended replacement(s)

Phoenix Part # 1085256

Industrial Ethernet Switch - FL SWITCH 1008N

1085256

https://www.phoenixcontact.com/us/products/1085256

Please be informed that the data shown in this PDF document is generated from our Online Catalog. Please find the complete data in the user documentation. Our General Terms of Use for Downloads are valid.

Narrow Ethernet switch, eight RJ45 ports with 10/100 Mbps on all ports, automatic data transmission speed detection, autocrossing function, and QoS

Your advantages

- RJ45 ports support a transmission speed of 10/100 Mbps
- QoS-prioritized (Quality of Service) messages
- Local diagnostic indicators with LEDs
- PROFINET PTCP filter for reliable communication on PROFINET networks
- Enhanced traffic prioritization for automation protocols
- Energy-efficient Ethernet in accord. with IEEE 802.3az
- PROFINET Conformance Class A for real-time data exchange
- Auto negotiation and autocrossing detection simplifies installation and setup

Commercial Data

Item number	1085256
Packing unit	1 pc
Sales Key	D15
Product Key	DNN116
GTIN	4055626833590
Weight per Piece (including packing)	257 g
Weight per Piece (excluding packing)	174 g
Country of origin	TW

Industrial Ethernet Switch - FL SWITCH 1008N

1085256

https://www.phoenixcontact.com/us/products/1085256

Technical Data

Dimensions

Width	22.5 mm
Height	140.4 mm
Depth	92.4 mm

Material specifications

Housing material	Polycarbonate fiber reinforced
	Polycarbonate fiber reinforced

Mounting

Mounting type	DIN rail mounting

Interfaces

Ethernet (RJ45)

Number of interfaces	8
Connection method	RJ45
Note on the connection method	Auto negotiation and autocrossing
Transmission speed	10/100 Mbps
Transmission physics	Ethernet in RJ45 twisted pair
Transmission length	100 m (per segment)
Signal LEDs	Data receive, link status
No. of channels	8 (RJ45 ports)

Product properties

Product type	Switch
	Unmanaged Switch 1000
MTTF	133.9 Years (MIL-HDBK-217F standard, temperature 25°C, operating cycle 100%)
	1254 Years (SN 29500 standard, temperature 25°C, operating cycle 21%)
	1196 Years (Telcordia standard, 25°C temperature, 21% operating cycle (5 days a week, 8 hours a day))

Switch functions

Basic functions	Unmanaged switch
	Autonegotiation
	Store and Forward switching mode
PROFINET conformance class	Conformance-Class A
MAC address table	2k
Status and diagnostic indicators	LEDs: U_S, link and activity per port
Additional functions	100 BASE-TX/100BASE-FX (IEEE 802.3u)
	Quality of Service (QoS) prioritization (IEEE 802.1p)

Industrial Ethernet Switch - FL SWITCH 1008N

1085256

https://www.phoenixcontact.com/us/products/1085256

	Energy-efficient Ethernet (IEEE 802.3az)
	10Base-T (IEEE 802.3)

Security functions

Basic functions	Unmanaged switch
	Autonegotiation
	Store and Forward switching mode

Electrical properties

Transmission medium	Copper

Supply

Supply voltage (DC)	24 V
Supply voltage (AC)	24 V AC (50/60 Hz)
Supply voltage range	9 V DC ... 32 V DC
	18 V AC ... 30 V AC (50/60 Hz)
Power supply connection	Via COMBICON, max. conductor cross section 2.5 mm²
Residual ripple	3.6 V_{PP} (within the permitted voltage range)
Max. current consumption	173 mA (at 9 V DC)
Typical current consumption	28 mA (at 24 V DC)

Connection data

Connection method	Push-in spring connection
Conductor cross section, rigid	0.2 mm² ... 2.5 mm²
Conductor cross section, flexible	0.2 mm² ... 2.5 mm²
Conductor cross section AWG	24 ... 12
Conductor cross section, flexible, with ferrule, with plastic sleeve	0.25 mm² ... 2.5 mm²
Conductor cross section flexible, with ferrule without plastic sleeve	0.25 mm² ... 2.5 mm²
Stripping length	10 mm

Environmental and real-life conditions

Ambient conditions

Degree of protection	IP30
Ambient temperature (operation)	-10 °C ... 60 °C
Ambient temperature (storage/transport)	-40 °C ... 85 °C
Altitude	2000 m (maximum)
Permissible humidity (operation)	5 % ... 95 % (non-condensing)
Permissible humidity (storage/transport)	5 % ... 95 % (non-condensing)
Shock (operation)	30g (EN 60068-2-27)
Vibration (operation)	in acc. with IEC 60068-2-6: 5g, 150 Hz
Air pressure (operation)	79 kPa ... 108 kPa up to 2000 m above mean sea level (Without derating)
Air pressure (storage/transport)	79 kPa ... 108 kPa up to 2000 m above mean sea level (Without derating)

Industrial Ethernet Switch - FL SWITCH 1008N

1085256

https://www.phoenixcontact.com/us/products/1085256

EMC data

Conformance with EMC directives	EN 61000-6-2 EN 61000-4-2 (ESD) Criterion B
	EN 61000-6-2 EN 61000-4-3 (electromagnetic fields) Criterion A
	EN 61000-6-2 EN 61000-4-4 (EFT burst) Criterion A
	EN 61000-6-2 EN 61000-4-5 (surge) Criterion B
	EN 61000-6-2 EN 61000-4-6 (line noise immunity) Criterion A
	EN 61000-6-2 EN 61000-4-8 (electromagnetic fields) Criterion A
	EN 61000-6-2 Class A
Electromagnetic compatibility	Conformance with EMC Directive 2014/30/EU
Noise emission	EN 61000-6-4:2007 + A1:2011
Noise immunity	EN 61000-6-2:2005

LED signaling

Status display	LEDs: U_S, link and activity per port

Industrial Ethernet Switch - FL SWITCH 1008N

1085256

https://www.phoenixcontact.com/us/products/1085256

Approvals

IECEE CB Scheme
Approval ID: DK-91138-UL

	Nominal Voltage U_N	Nominal Current I_N	Cross Section AWG	Cross Section mm^2
			-	-

EAC
Approval ID: RU *-DE.A*08.B.00731

IECEE CB Scheme
Approval ID: DK-91246-UL

	Nominal Voltage U_N	Nominal Current I_N	Cross Section AWG	Cross Section mm^2
			-	-

UL Listed
Approval ID: FILE E 140403

cUL Listed
Approval ID: FILE E 140403

KC
Approval ID: R-R-PCK-1085256

cUL Listed
Approval ID: FILE E 238705

UL Listed
Approval ID: FILE E 238705

CC-Link IE Field
Approval ID: NRT-IT-00068

cUL Listed
Approval ID: FILE E 196811

UL Listed

Industrial Ethernet Switch - FL SWITCH 1008N

1085256

https://www.phoenixcontact.com/us/products/1085256

Approval ID: FILE E 196811

cULus Listed

Industrial Ethernet Switch - FL SWITCH 1008N

1085256

https://www.phoenixcontact.com/us/products/1085256

Classifications

ECLASS

ECLASS-9.0	19170106
ECLASS-10.0.1	19170402
ECLASS-11.0	19170402

ETIM

ETIM 8.0	EC000734

UNSPSC

UNSPSC 21.0	43222600

Industrial Ethernet Switch - FL SWITCH 1008N

1085256

https://www.phoenixcontact.com/us/products/1085256

Environmental Product Compliance

REACh SVHC	Lead 7439-92-1

PHOENIX 1357875 -MGUARD 4305 - ROUTER

FL MGUARD 4305 - Router

1357875

https://www.phoenixcontact.com/us/products/1357875

Please be informed that the data shown in this PDF document is generated from our online catalog. Please find the complete data in the user documentation. Our general terms of use for downloads are valid.

Security-Router series, 5 RJ45 ports (WAN, 3x LAN, DMZ (XF5)) 10/100/1000 Mbps, degree of protection: IP20, Ambient temperature (operation): -40 °C ... 60 °C, Supply voltage range: 12 V DC ... 36 V DC, NAT, VPN, Development process certified in accordance with IEC 62443-4-1, Product certified in accordance with IEC 62443-4-2, Configurable stateful inspection firewall with full scope of functions, safe isolation for PROFIsafe in accordance with IEC 61784-3-3, user firewall, conditional firewall, rule sets

Product description

Security appliance

Your advantages

- Central management tool
- Maximum security
- Maximum performance
- Integration of IT and OT security
- mGuard security technology

Commercial data

Item number	1357875
Packing unit	1 pc
Minimum order quantity	1 pc
Sales key	DN29
Product key	DNN311
GTIN	4063151684099
Weight per piece (including packing)	405.05 g
Weight per piece (excluding packing)	332 g
Customs tariff number	85176200
Country of origin	DE

Caterpillar: Confidential Green

FL MGUARD 4305 - Router

1357875

https://www.phoenixcontact.com/us/products/1357875

Technical data

Dimensions

Width	45 mm
Height	130 mm
Depth	133.8 mm

Notes

Note on application

Note on application	Only for industrial use

Material specifications

Color	gray
Housing material	Plastic

Interfaces

Ethernet

Connection method	RJ45
Transmission speed	10/100/1000 Mbps
Transmission physics	Ethernet in RJ45 twisted pair
Transmission length	100 m (per segment)
Signal LEDs	Supply voltage, data transmission, error, link, activity
No. of channels	5 (RJ45 ports (WAN, 3x LAN, DMZ (XF5)))

System properties

Functionality

Basic functions	Security appliance with intelligent firewall and VPN for 250 tunnels, plastic housing, slot for SD memory card, extended temperature range, Gigabit wire speed, 3-port managed switch, DMZ port (XF5)

System requirements

Supported browsers	HTTPS support required

Product properties

Product type	Security router for the DIN rail
Product family	Security-Router
Type	Stand-alone
Special properties	NAT
	VPN
	Development process certified in accordance with IEC 62443-4-1
	Product certified in accordance with IEC 62443-4-2

Caterpillar: Confidential Green

FL MGUARD 4305 - Router

1357875

https://www.phoenixcontact.com/us/products/1357875

Basic functions	Security appliance with intelligent firewall and VPN for 250 tunnels, plastic housing, slot for SD memory card, extended temperature range, Gigabit wire speed, 3-port managed switch, DMZ port (XF5)

Insulation characteristics

Protection class	III (IEC 61140, EN 61140, VDE 0140-1)

Security functions

1:1 Network Address Translation (NAT) in the VPN	supported
Number of VPN tunnels	250
Authentication	X.509v3 certificates with RSA or PSK
Data integrity	MD5, SHA-1, SHA 256, SHA-512
Dynamic Host Configuration Protocol (DHCP) support	Server or Relay Agent
Filtering	MAC and IP addresses, ports, protocols
Firewall data throughput	max. 940 Mbps (Router mode, default firewall rules, unidirectional throughput)
	max. 850 Mbps (Stealth mode, default firewall rules, unidirectional throughput)
Firewall rules	Configurable stateful inspection firewall with full scope of functions, safe isolation for PROFIsafe in accordance with IEC 61784-3-3, user firewall, conditional firewall, rule sets
Basic functions	Security appliance with intelligent firewall and VPN for 250 tunnels, plastic housing, slot for SD memory card, extended temperature range, Gigabit wire speed, 3-port managed switch, DMZ port (XF5)
Internet Protocol Security (IPsec) mode	ESP tunnel / ESP transport
Link Layer Discovery Protocol (LLDP)	As per protocol 802.2
Network Time Protocol (NTP) client	Client/server
Remote Syslog Logging	on externals server
Routing	Standard routing, NAT, 1:1-NAT, port forwarding
Protection against	IP spoofing, DoS and Syn Flood Protection
Encryption methods	DES, 3DES, AES-128, -192, -256
Virtual private network (VPN) throughput	max. 250 Mbps (Router mode, VPN unidirectional throughput)

Electrical properties

Local diagnostics	US1, US2 Supply voltage US1, US2 Green LED
	One LED per port Link active / Speed Green / green/yellow LED
Maximum power dissipation for nominal condition	typ. 2.88 W

Supply

Supply voltage (DC)	24 V DC (redundant)
Supply voltage range	12 V DC ... 36 V DC
Power supply connection	via COMBICON, max. conductor cross-section 1.5 mm²
Residual ripple	3.6 V_{PP} (within the permitted voltage range)
Max. current consumption	1 A
Typical current consumption	120 mA (at U_S = 24 V DC)

Caterpillar: Confidential Green

FL MGUARD 4305 - Router

1357875

https://www.phoenixcontact.com/us/products/1357875

Signal contact control voltage	24 V DC (typical)
Signal contact control current	250 mA (short-circuit-proof)

Environmental and real-life conditions

Ambient conditions

Degree of protection	IP20
Ambient temperature (operation)	-40 °C ... 60 °C
Ambient temperature (storage/transport)	-40 °C ... 70 °C
Permissible humidity (operation)	5 % ... 95 % (non-condensing)
Permissible humidity (storage/transport)	5 % ... 95 % (non-condensing)

Standards and regulations

Free from substances that could impair the application of coating	Yes

Approvals

Conformity/Approvals

Conformance	CE-compliant

Mounting

Mounting type	DIN rail mounting

EMC data

Electromagnetic compatibility	Conformance with EMC Directive 2014/30/EU
Conformance with EMC directives	IEC 61000-6-2 IEC 61000-4-2 (ESD) 6 kV contact discharge, 8 kV air discharge
	IEC 61000-6-2 IEC 61000-4-3 (immunity to radiated interference) 10 V/m (80 MHz ... 6000 MHz)
	IEC 61000-6-2 IEC 61000-4-4 (burst) 2 kV power line, 2 kV data line
	IEC 61000-6-2 IEC 61000-4-5 (surge) power line: 1 kV (line/earth), 0.5 kV (line/line), 1 kV data line
	IEC 61000-6-2 IEC 61000-4-6 (immunity to conducted interference) 10 V (150 kHz ... 80 MHz)
Noise immunity	EN 61000-6-2:2005

Noise emission

Standards/regulations	EN 61000-6-4

Signaling

Status display	LEDs: US1, US2, FAIL, Link, and Activity

Caterpillar: Confidential Green

FL MGUARD 4305 - Router

1357875

https://www.phoenixcontact.com/us/products/1357875

Approvals

To download certificates, visit the product detail page: https://www.phoenixcontact.com/us/products/1357875

cUL Listed
Approval ID: E238705

Cybersecurity Certificate
Approval ID: 968 CSP 1029.00 25

BSH
Approval ID: BSH 1122

DNV
Approval ID: TAA0000382

Classifications

ECLASS

ECLASS-13.0	19170406
ECLASS-15.0	19170406

ETIM

ETIM 9.0	EC001478

Caterpillar: Confidential Green

Phoenix Part # 2703981

IL ETH BK DI8 DO4 2TX-PAC - Bus coupler

2703981

https://www.phoenixcontact.com/us/products/2703981

Please be informed that the data shown in this PDF document is generated from our online catalog. Please find the complete data in the user documentation. Our general terms of use for downloads are valid.

Inline, Bus coupler, Modbus/TCP(UDP), RJ45 jack, Digital inputs: 8, 24 V DC, connection technology: 3-conductor, Digital outputs: 4, 24 V DC, 500 mA, connection technology: 3-conductor, transmission speed in the local bus: 500 kbps / 2 Mbps, degree of protection: IP20, including Inline connectors and marking fields

Product description

The bus coupler with integrated I/Os is intended for use within a Modbus/TCP (UDP) network and represents the link to the Inline I/O system. Up to 61 Inline devices can be connected to the bus coupler. The bus coupler supports a maximum of 16 PCP devices.

Your advantages

- 2 Ethernet ports (with integrated switch)
- Auto negotiation
- Autocrossing
- Transmission speed of 10 Mbps and 100 Mbps
- Automatic detection of the transmission speed in the local bus (500 kbps or 2 Mbps)
- 8 digital inputs, 4 digital outputs (on-board)
- Data exchange via OPC server supported
- Software interfaces for access via TCP/IP: Device Driver Interface (DDI) and High-Level Language Fieldbus Interface (HFI)
- Web-based management

Commercial data

Item number	2703981
Packing unit	1 pc
Minimum order quantity	1 pc
Sales key	DR01
Product key	DRI11B
Catalog page	Page 103 (C-6-2019)
GTIN	4046356041157
Weight per piece (including packing)	341.4 g
Weight per piece (excluding packing)	341.14 g
Customs tariff number	85176200
Country of origin	DE

Phoenix Part # 2703981

IL ETH BK DI8 DO4 2TX-PAC - Bus coupler

2703981

https://www.phoenixcontact.com/us/products/2703981

Technical data

Dimensions

Dimensional drawing	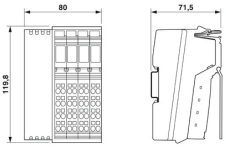
Width	80 mm
Height	119.8 mm
Depth	71.5 mm
Note on dimensions	Specfications with connectors

Notes

Utilization restriction

CCCex note	Use in potentially explosive areas is not permitted in China.

Interfaces

Modbus/TCP (UDP)

Number of interfaces	2
Connection method	RJ45 jack
Note on the connection method	Auto negotiation and autocrossing
Transmission speed	10/100 Mbps
Transmission physics	Ethernet in RJ45 twisted pair

Inline local bus

Connection method	Inline data jumper
Transmission speed	500 kbps / 2 Mbps (automatic detection, no combined system)

System properties

System limits

Number of supported devices	max. 63 (per station)
Number of local bus devices that can be connected	max. 61 (The on-board I/Os are two devices)
Number of devices with parameter channel	max. 16
Number of supported branch terminals with remote bus branch	0

Module

ID code (hex)	none
Input address area	8 bit
Output address area	4 bit
Register length	16 bit

Phoenix Part # 2703981

IL ETH BK DI8 DO4 2TX-PAC - Bus coupler

2703981

https://www.phoenixcontact.com/us/products/2703981

Input data

Digital

Input name	Digital inputs
Description of the input	EN 61131-2 type 1
Number of inputs	8
Connection method	Inline connector
Connection technology	3-conductor
Input voltage	24 V DC
Input voltage range "0" signal	-30 V DC ... 5 V DC
Input voltage range "1" signal	15 V DC ... 30 V DC
Nominal input voltage U_{IN}	24 V DC
Nominal input current at U_{IN}	typ. 3 mA
Typical input current per channel	typ. 3 mA
Typical response time	approx. 500 µs
Delay at signal change from 0 to 1	1.2 ms
Delay at signal change from 1 to 0	1.2 ms

Output data

Digital

Output name	Digital outputs
Connection method	Inline connector
Connection technology	3-conductor
Number of outputs	4
Protective circuit	Short-circuit and overload protection; Freewheeling circuit in the output driver
Output voltage	24 V DC -1 V (At nominal current)
Maximum output current per module	max. 2 A
Nominal output voltage	24 V DC
Output current when switched off	max. 10 µA (When not loaded, a voltage can be measured even at an output that is not set.)
Nominal load, inductive	12 VA (1.2 H, 48 Ω)
Nominal load, lamp	12 W
Nominal load, ohmic	12 W
Reverse voltage resistance to short pulses	Reverse voltage proof
Behavior with overload	Auto restart
Behavior with inductive overload	Output can be destroyed
Behavior at voltage switch-off	The output follows the power supply without delay
Signal delay	typ. 1.2 ms
Overcurrent shut-down	min. 0.7 A

Product properties

Type	modular
Product type	I/O component

IL ETH BK DI8 DO4 2TX-PAC - Bus coupler

2703981

https://www.phoenixcontact.com/us/products/2703981

Product family	Inline
Scope of delivery	including Inline connectors and marking fields
No. of channels	12
Diagnostics messages	Short-circuit or overload of the digital outputs yes
	Sensor supply failure yes
	Failure of the actuator supply yes

Insulation characteristics

Overvoltage category	II (IEC 60664-1, EN 60664-1)
Pollution degree	2 (IEC 60664-1, EN 60664-1)

Electrical properties

No. of channels	12
Maximum power dissipation for nominal condition	23.5 W

Potentials

Power consumption	typ. 3 W (entire device)
Protective circuit	Surge protection (segment supply, main supply, bus coupler supply); Suppressor diode, 35 V DC
	Reverse polarity protection (segment supply, main supply, bus coupler supply); Suppressor diode, 35 V DC

Potentials: Bus coupler supply U_{BK}; Communications power U_L (7.5 V) and the analog supply U_{ANA} (24 V) are generated from the bus coupler supply.

Supply voltage	24 V DC (via Inline connector)
Supply voltage range	19.2 V DC ... 30 V DC (including all tolerances, including ripple)
Current draw	max. 0.98 A (with max. number of connected I/O terminal blocks)
	min. 80 mA (without connected I/O terminal blocks)

Potentials: Communications power (U_L)

Supply voltage	7.5 V DC

Potentials: Supply of analog modules (U_{ANA})

Supply voltage	24 V DC
Supply voltage range	19.2 V DC ... 30 V DC (including all tolerances, including ripple)

Potentials: Main circuit supply (U_M)

Supply voltage	24 V DC (via Inline connector)
Supply voltage range	19.2 V DC ... 30 V DC (including all tolerances, including ripple)
Current draw	max. 8 A DC
	min. 3 mA (without connected peripherals)

Potentials: Segment circuit supply (U_S)

Supply voltage	24 V DC (via Inline connector)
Supply voltage range	19.2 V DC ... 30 V DC (including all tolerances, including ripple)
Current draw	max. 8 A DC
	min. 3 mA (without connected peripherals)

Electrical isolation/isolation of the voltage ranges

IL ETH BK DI8 DO4 2TX-PAC - Bus coupler

2703981

https://www.phoenixcontact.com/us/products/2703981

Test voltage: Ethernet interface 1 / Ethernet interface 2	500 V AC, 50 Hz, 1 min.
Test voltage: Ethernet interface 1 / logic (U_{BK}, U_L, U_{ANA})	500 V AC, 50 Hz, 1 min.
Test voltage: Ethernet interface 1 / I/O (U_M, U_S)	500 V AC, 50 Hz, 1 min.
Test voltage: Ethernet interface 1 / functional ground	500 V AC, 50 Hz, 1 min.
Test voltage: Ethernet interface 2 / logic (U_{BK}, U_L, U_{ANA})	500 V AC, 50 Hz, 1 min.
Test voltage: Ethernet interface 2 / I/O (U_M, U_S)	500 V AC, 50 Hz, 1 min.
Test voltage: Ethernet interface 2 / functional ground	500 V AC, 50 Hz, 1 min.
Test voltage: Communications power (U_{BK}, U_L, U_{ANA}) / I/O (U_M, U_S)	500 V AC, 50 Hz, 1 min.
Test voltage: Communications power (U_{BK}, U_L, U_{ANA}) / functional ground	500 V AC, 50 Hz, 1 min.
Test voltage: I/O (U_M, U_S) / functional ground	500 V AC, 50 Hz, 1 min.

Connection data

Connection technology

Connection name	Inline connector

Conductor connection

Connection method	Spring-cage connection
Conductor cross section rigid	0.08 mm² ... 1.5 mm²
Conductor cross section flexible	0.08 mm² ... 1.5 mm²
Conductor cross section AWG	28 ... 16
Stripping length	8 mm

Inline connector

Connection method	Spring-cage connection
Conductor cross section, rigid	0.08 mm² ... 1.5 mm²
Conductor cross section, flexible	0.08 mm² ... 1.5 mm²
Conductor cross section AWG	28 ... 16
Stripping length	8 mm

Environmental and real-life conditions

Ambient conditions

Ambient temperature (operation)	-25 °C ... 55 °C
Degree of protection	IP20
Air pressure (operation)	70 kPa ... 106 kPa (up to 3000 m above sea level)
Air pressure (storage/transport)	70 kPa ... 106 kPa (up to 3000 m above sea level)
Ambient temperature (storage/transport)	-40 °C ... 85 °C
Permissible humidity (operation)	10 % ... 95 % (non-condensing)
Permissible humidity (storage/transport)	10 % ... 95 % (non-condensing)

Standards and regulations

Protection class	III (IEC 61140, EN 61140, VDE 0140-1)

Mounting

Phoenix Part # 2703981

IL ETH BK DI8 DO4 2TX-PAC - Bus coupler

2703981

https://www.phoenixcontact.com/us/products/2703981

Mounting type	DIN rail mounting

Phoenix Part # 2703981

IL ETH BK DI8 DO4 2TX-PAC - Bus coupler

2703981

https://www.phoenixcontact.com/us/products/2703981

Drawings

Dimensional drawing

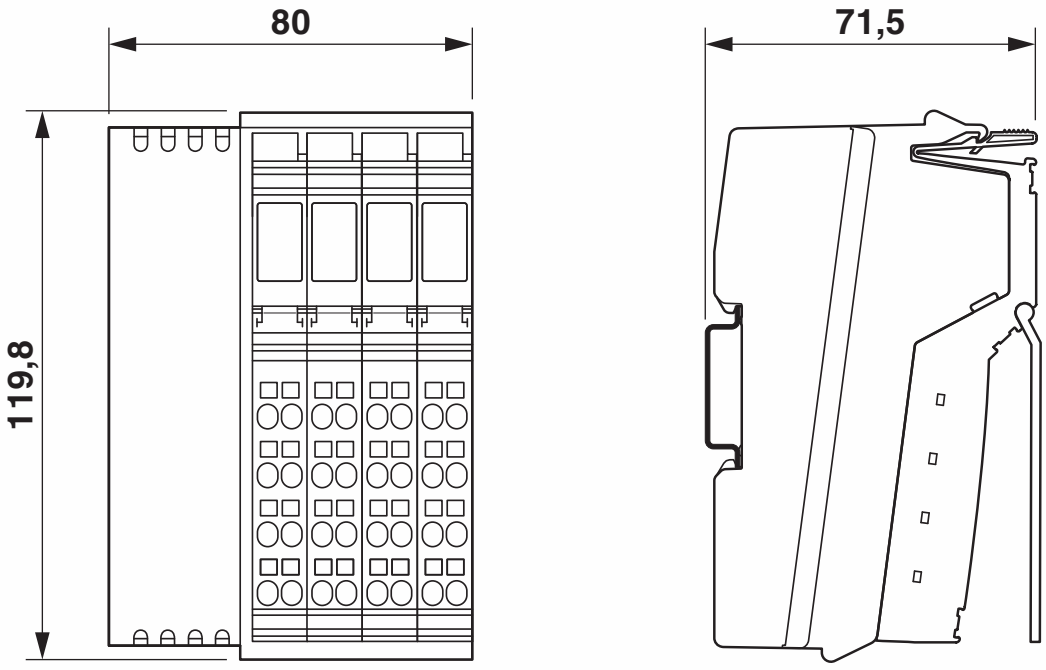

Phoenix Part # 2703981

IL ETH BK DI8 DO4 2TX-PAC - Bus coupler

2703981

https://www.phoenixcontact.com/us/products/2703981

Dimensional drawing

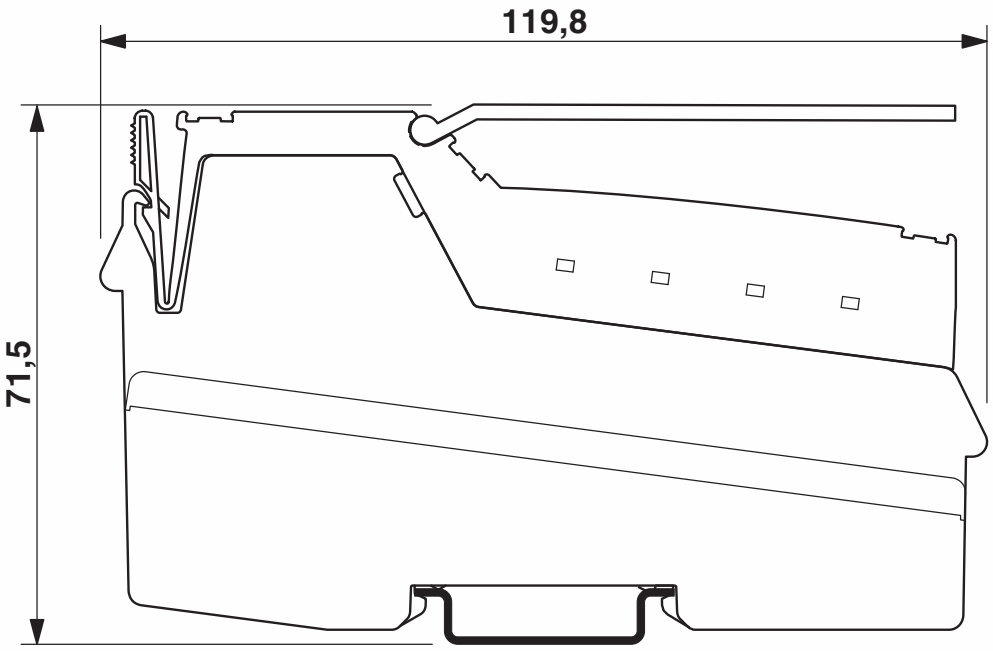

Connection diagram

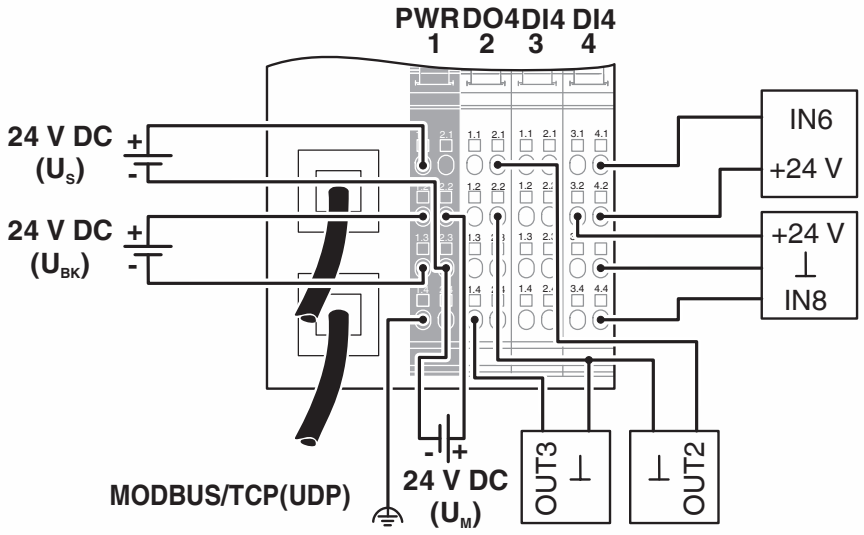

Phoenix Part # 2891030

Industrial Ethernet Switch - FL SWITCH 3005 - 2891030

Please be informed that the data shown in this PDF Document is generated from our Online Catalog. Please find the complete data in the user's documentation. Our General Terms of Use for Downloads are valid (http://phoenixcontact.com/download)

Managed Ethernet switch with five RJ45 ports at 10/100 Mbps and operating temperature of -10°C ... +60°C

Product Description

FL SWITCH 3000 managed industrial Ethernet switches combine extensive network performance and securtiy features with complete IEEE redundancy (STP/RSTP/MST) and 15 ms recovery time extended ring redundancy. Unique web customization provides a simplified user interface for today's applications and scalable functionality for future needs. A comprehensive mix of fiber optic and copper port connections meets a wide range of applications.

Product Features

- Unique cleanup function hides unused configuration pages, reducing complexity, maintenance and startup times
- Auto negotiation and autocrossing detection simplifies installation and setup
- Security options with cable locking
- Secure web-based and SNMP-based management
- Extensive web diagnostics with configurable LED and remote alarm contacts
- RJ45 ports support a transmission speed of 10/100 Mbps; fiber optic ports support 100 Mbps
- -40 to 75°C and -10 to 60°C ambient temperature versions

Ethernet

Key Commercial Data

Packing unit	1 pc
Weight per Piece (excluding packing)	1250.0 g
Custom tariff number	85176200
Country of origin	Taiwan

Technical data

Dimensions

Width	54.4 mm
Height	146.4 mm
Depth	125 mm

Phoenix Part # 2891030

Industrial Ethernet Switch - FL SWITCH 3005 - 2891030

Technical data

Ambient conditions

Degree of protection	IP20
Ambient temperature (operation)	-10 °C ... 60 °C
Ambient temperature (storage/transport)	-20 °C ... 85 °C
Permissible humidity (operation)	5 % ... 95 % (non-condensing)
Permissible humidity (storage/transport)	5 % ... 95 % (non-condensing)
Air pressure (operation)	57 kPa ... 108 kPa (up to 4850 m above mean sea level)
Air pressure (storage/transport)	57 kPa ... 108 kPa (up to 4850 m above mean sea level)
Noise immunity	EN 61000-6-2:2005

Interfaces

Interface 1	Ethernet (RJ45)
No. of ports	5 (RJ45 ports)
Connection method	RJ45
Note on connection method	Auto negotiation and autocrossing
Transmission physics	Ethernet in RJ45 twisted pair
Transmission speed	10/100 MBit/s (with auto negotiation)
Transmission length	100 m

Function

Basic functions	Managed switch
Status and diagnostic indicators	LEDs: U_{S1}, U_{S2} (redundant voltage supply), link and activity per port
Signal contact control voltage	24 V DC
Signal contact control current	1 A

Network expansion parameters

Cascading depth	Network, linear, and star structure: any
Maximum conductor length (twisted pair)	100 m

Supply voltage

Supply voltage	24 V DC (redundant)
Residual ripple	3.6 V_{PP} (within the permitted voltage range)
Supply voltage range	12 V DC ... 48 V DC
Typical current consumption	200 mA (at U_S = 24 V DC)
Inrush surge current	8.6 A (2 ms)

General

Mounting type	NS 35 DIN rail
Type AX	Block design
Net weight	920 g
Housing material	Aluminum

Industrial Ethernet Switch - FL SWITCH 3005 - 2891030

Technical data

General

Noise emission	EN 61000-6-4

Connection data

Connection method	Pluggable COMBICON screw connections,
Conductor cross section solid min.	0.2 mm²
Conductor cross section solid max.	2.5 mm²
Conductor cross section flexible min.	0.2 mm²
Conductor cross section flexible max.	2.5 mm²
Conductor cross section AWG min.	24
Conductor cross section AWG max.	12
Stripping length	7 mm

Mechanical tests

Type of test	Shock in acc. with EN 60068-2-27/IEC 60068-2-27
Test result	25g, 11 ms half-sine shock pulse
Type of test	Vibration resistance in acc. with EN 60068-2-6/IEC 60068-2-6
Test result	5g, 150 Hz, Criterion 3
Type of test	Free fall in acc. with IEC 60068-2-32
Test result	1 m

Conformity with EMC directives

Developed in acc. with standard	IEC 61000-6.2
Test standard	IEC 61000-4-2 (ESD)
Test result	Criterion B
Test standard	IEC 61000-4-3 (immunity to radiated interference)
Test result	Criterion A
Test standard	IEC 61000-4-4 (burst)
Test result	Criterion A
Test standard	IEC 61000-4-5 (surge)
Test result	Criterion B
Test standard	IEC 61000-4-6 (immunity to conducted interference)
Test result	Criterion A
Test standard	IEC 61000-4-8 (immunity to magnetic fields)
Test result	Criterion A
Test standard	EN 55022 (emitted interference)
Test result	Class A

Industrial Ethernet Switch - FL SWITCH 3005 - 2891030

Classifications

eCl@ss

eCl@ss 4.0	27250501
eCl@ss 4.1	27250501
eCl@ss 5.0	19030117
eCl@ss 5.1	19030117
eCl@ss 6.0	19170106
eCl@ss 7.0	19170106
eCl@ss 8.0	19170106

ETIM

ETIM 4.0	EC000734
ETIM 5.0	EC000734

UNSPSC

UNSPSC 6.01	43172901
UNSPSC 7.0901	43201404
UNSPSC 11	43172015
UNSPSC 12.01	43201410
UNSPSC 13.2	43201410

Approvals

Approvals

Approvals

UL Listed / cUL Listed / EAC / EAC / cULus Listed

Ex Approvals

UL Listed / cUL Listed / cULus Listed

Approvals submitted

Approval details

UL Listed

Phoenix Part # 2891030

Industrial Ethernet Switch - FL SWITCH 3005 - 2891030

Approvals

cUL Listed

EAC

EAC

cULus Listed

Drawings

Dimensional drawing

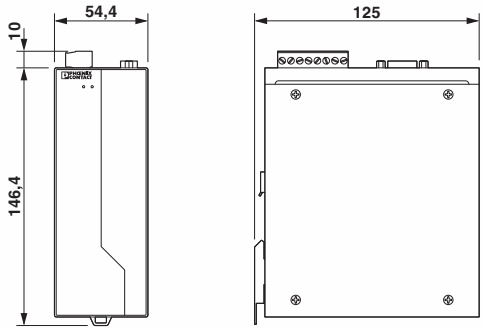

Phoenix Contact 2015 © - all rights reserved
http://www.phoenixcontact.com

Phoenix Part # 2897156

IB IL 24 DI 16-ME - Digital module

2897156

https://www.phoenixcontact.com/us/products/2897156

Please be informed that the data shown in this PDF document is generated from our online catalog. Please find the complete data in the user documentation. Our general terms of use for downloads are valid.

Inline, Digital input terminal, Digital inputs: 16, 24 V DC, connection technology: 3-conductor, transmission speed in the local bus: 500 kbps, degree of protection: IP20, including Inline connectors and marking fields

Product description

The terminal is designed for use within an Inline station. It is used to acquire digital signals.

Your advantages

- 16 digital inputs
- Connection of sensors in 2- and 3-conductor technology
- Maximum permissible load current per sensor: 250 mA
- Maximum permissible load current from the terminal: 4 A

Commercial data

Item number	2897156
Packing unit	1 pc
Minimum order quantity	4 pc
Sales key	DR01
Product key	DRI131
Catalog page	Page 123 (C-6-2019)
GTIN	4046356148207
Weight per piece (including packing)	193.45 g
Weight per piece (excluding packing)	122 g
Customs tariff number	85389099
Country of origin	DE

Phoenix Part # 2897156

IB IL 24 DI 16-ME - Digital module

2897156

https://www.phoenixcontact.com/us/products/2897156

Technical data

Dimensions

Dimensional drawing	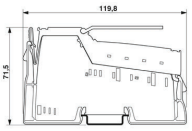
Width	48.8 mm
Height	119.8 mm
Depth	71.5 mm
Note on dimensions	Housing dimensions

Interfaces

Inline local bus

Number of interfaces	2
Connection method	Inline data jumper
Transmission speed	500 kbps

System properties

Module

ID code (dec.)	190
ID code (hex)	BE
Length code (hex)	01
Length code (dec)	01
Process data channel	16 bit
Input address area	2 Byte
Output address area	0 Byte
Register length	16 bit
Required parameter data	1 Byte
Required configuration data	4 Byte

Input data

Digital

Input name	Digital inputs
Description of the input	EN 61131-2 type 1
Number of inputs	16
Cable length	max. 30 m (to the sensor)
Connection method	Spring-cage connection
Connection technology	3-conductor

IB IL 24 DI 16-ME - Digital module

2897156

https://www.phoenixcontact.com/us/products/2897156

Input voltage	24 V DC
Input voltage range "0" signal	-3 V DC ... 5 V
Input voltage range "1" signal	15 V DC ... 30 V DC
Nominal input voltage U_{IN}	24 V DC
Nominal input current at U_{IN}	min. 3 mA (at nominal voltage)
Sensor current per channel	max. 250 mA
Typical response time	< 1 ms
Delay at signal change from 0 to 1	1 ms
Delay at signal change from 1 to 0	1 ms

Product properties

Type	modular
Product type	I/O component
Product family	Inline
Scope of delivery	including Inline connectors and marking fields
No. of channels	16
Operating mode	Process data mode with one word

Electrical properties

No. of channels	16
Maximum power dissipation for nominal condition	14.5 W

Potentials: Communications power (U_L)

Supply voltage	7.5 V DC (via voltage jumper)
Current draw	max. 60 mA
Power consumption	max. 0.45 W

Potentials: Segment circuit supply (U_S)

Supply voltage	24 V DC (via voltage jumper)
Supply voltage range	19.2 V DC ... 30 V DC (including all tolerances, including ripple)
Current draw	max. 4 A
	min. 0 A (No-load)

Electrical isolation/isolation of the voltage ranges

Test voltage: 7.5 V supply (bus logics)/24 V supply (I/O)	500 V AC, 50 Hz, 1 min.
Test voltage: 24 V supply (I/O) / functional ground	500 V AC, 50 Hz, 1 min.
Test voltage: 7.5 V supply (bus logic)/functional ground	500 V AC, 50 Hz, 1 min.

Connection data

Connection technology

Connection name	Inline connector

Conductor connection

Connection method	Spring-cage connection
Conductor cross section rigid	0.08 mm² ... 1.5 mm²
Conductor cross section flexible	0.08 mm² ... 1.5 mm²

IB IL 24 DI 16-ME - Digital module

2897156

https://www.phoenixcontact.com/us/products/2897156

Conductor cross section AWG	28 ... 16
Stripping length	8 mm

Inline connector

Connection method	Spring-cage connection
Conductor cross section, rigid	0.08 mm² ... 1.5 mm²
Conductor cross section, flexible	0.08 mm² ... 1.5 mm²
Conductor cross section AWG	28 ... 16
Stripping length	8 mm

Environmental and real-life conditions

Ambient conditions

Ambient temperature (operation)	-25 °C ... 55 °C
Degree of protection	IP20
Air pressure (operation)	70 kPa ... 106 kPa (up to 3000 m above sea level)
Air pressure (storage/transport)	70 kPa ... 106 kPa (up to 3000 m above sea level)
Ambient temperature (storage/transport)	-25 °C ... 85 °C
Permissible humidity (operation)	10 % ... 95 % (non-condensing)
Permissible humidity (storage/transport)	10 % ... 95 % (non-condensing)

Standards and regulations

Protection class	III (IEC 61140, EN 61140, VDE 0140-1)

Mounting

Mounting type	DIN rail mounting

Phoenix Part # 2897156

IB IL 24 DI 16-ME - Digital module

2897156

https://www.phoenixcontact.com/us/products/2897156

Drawings

Dimensional drawing

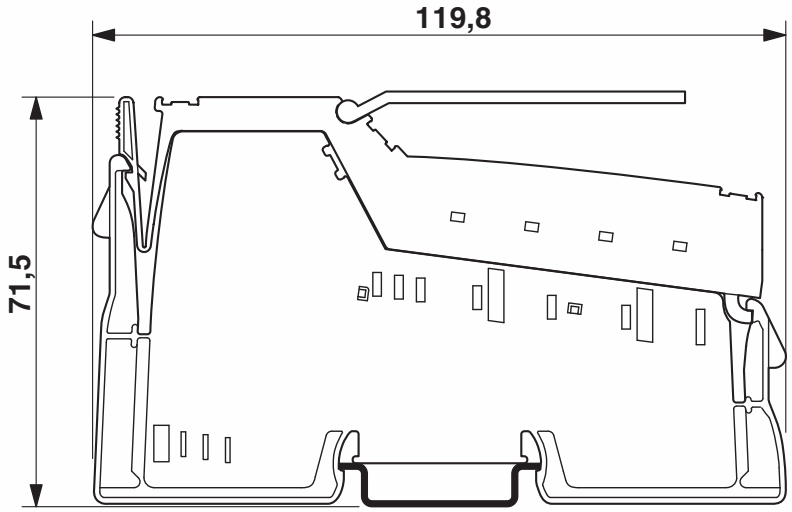

Phoenix Contact 2023 © - all rights reserved
https://www.phoenixcontact.com

Phoenix Contact USA
586 Fulling Mill Road
Middletown, PA 17057, United States
(+717) 944-1300
info@phoenixcon.com

Phoenix Part # 2897253

IB IL 24 DO 16-ME - Digital module

2897253

https://www.phoenixcontact.com/us/products/2897253

Please be informed that the data shown in this PDF document is generated from our online catalog. Please find the complete data in the user documentation. Our general terms of use for downloads are valid.

Inline, Digital output terminal, Digital outputs: 16, 24 V DC, connection technology: 3-conductor, transmission speed in the local bus: 500 kbps, degree of protection: IP20, including Inline connectors and marking fields

Product description

The terminal is designed for use within an Inline station. It is used to output digital signals.

Your advantages

- 16 digital outputs
- Connection of actuators in 2- and 3-conductor technology
- Nominal current per output: 500 mA
- Total current of the terminal: 8 A
- Short-circuit and overload-protected outputs
- Diagnostic and status indicators

Commercial data

Item number	2897253
Packing unit	1 pc
Minimum order quantity	4 pc
Sales key	DR01
Product key	DRI132
Catalog page	Page 129 (C-6-2019)
GTIN	4046356148191
Weight per piece (including packing)	199.2 g
Weight per piece (excluding packing)	130 g
Customs tariff number	85389099
Country of origin	DE

IB IL 24 DO 16-ME - Digital module

2897253

https://www.phoenixcontact.com/us/products/2897253

Technical data

Dimensions

Dimensional drawing	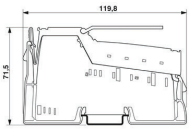
Width	48.8 mm
Height	119.8 mm
Depth	71.5 mm
Note on dimensions	Housing dimensions

Interfaces

Inline local bus

Number of interfaces	2
Connection method	Inline data jumper
Transmission speed	500 kbps
Transmission physics	Copper

System properties

Module

ID code (dec.)	189
ID code (hex)	BD
Length code (hex)	01
Length code (dec)	01
Process data channel	16 bit
Input address area	0 Byte
Output address area	2 Byte
Register length	16 bit
Required parameter data	4 Byte
Required configuration data	4 Byte

Output data

Digital

Output name	Digital outputs
Connection method	Spring-cage connection
Connection technology	3-conductor
Number of outputs	16
Protective circuit	Overload protection, short-circuit protection of outputs; electronic

IB IL 24 DO 16-ME - Digital module

2897253

https://www.phoenixcontact.com/us/products/2897253

Output voltage	24 V DC (U_S - 1 V)
Limitation of the voltage induced on circuit interruption	-46 V ... -15 V
Maximum inrush current	max. 1.5 A (for 20 ms)
Maximum output current per channel	500 mA
Maximum output current per module	8 A
Nominal output voltage	24 V DC (voltage difference at I_{nom} ≤ 1 V)
Output voltage when switched off	max. 2 V
Output current when switched off	max. 300 µA
Nominal load, inductive	12 VA (1.2 H, 50 Ω)
Nominal load, lamp	12 W
Nominal load, ohmic	12 W (48 Ω)
Maximum operating frequency with ohmic nominal load	max. 300 Hz (this switching frequency is limited by the number of bus devices, the structure of the bus, the software used and the control or computer system used)
Reverse voltage resistance to short pulses	Reverse voltage proof
Behavior with overload	Auto restart
Behavior with inductive overload	Output can be destroyed
Behavior at voltage switch-off	The output follows the power supply without delay
Overcurrent shut-down	min. 0.7 A
Output current with ground connection interrupt when switched off	max. 25 mA

Product properties

Type	modular
Product type	I/O component
Product family	Inline
Scope of delivery	including Inline connectors and marking fields
No. of channels	16
Operating mode	Process data mode with one word
Diagnostics messages	Short-circuit or overload of the digital outputs Error message in the diagnostic code (bus) and display (2 Hz) via the LED (D) on the module

Electrical properties

No. of channels	16
Maximum power dissipation for nominal condition	18.36 W

Potentials: Communications power (U_L)

Supply voltage	7.5 V DC (via voltage jumper)
Current draw	max. 90 mA
Power consumption	max. 0.675 W

Potentials: Segment circuit supply (U_S)

Supply voltage	24 V DC (via voltage jumper)
Supply voltage range	19.2 V DC ... 30 V DC (including all tolerances, including ripple)
Current draw	max. 8 A

IB IL 24 DO 16-ME - Digital module

2897253

https://www.phoenixcontact.com/us/products/2897253

Electrical isolation/isolation of the voltage ranges	
Test voltage: 7.5 V supply (bus logics)/24 V supply (I/O)	500 V AC, 50 Hz, 1 min.
Test voltage: 7.5 V supply (bus logic)/functional ground	500 V AC, 50 Hz, 1 min.
Test voltage: 24 V supply (I/O) / functional ground	500 V AC, 50 Hz, 1 min.

Connection data

Connection technology	
Connection name	Inline connector

Conductor connection	
Connection method	Spring-cage connection
Conductor cross section rigid	0.08 mm² ... 1.5 mm²
Conductor cross section flexible	0.08 mm² ... 1.5 mm²
Conductor cross section AWG	28 ... 16
Stripping length	8 mm

Inline connector	
Connection method	Spring-cage connection
Conductor cross section, rigid	0.08 mm² ... 1.5 mm²
Conductor cross section, flexible	0.08 mm² ... 1.5 mm²
Conductor cross section AWG	28 ... 16
Stripping length	8 mm

Environmental and real-life conditions

Ambient conditions	
Ambient temperature (operation)	-25 °C ... 55 °C
Degree of protection	IP20
Air pressure (operation)	70 kPa ... 106 kPa (up to 3000 m above sea level)
Air pressure (storage/transport)	70 kPa ... 106 kPa (up to 3000 m above sea level)
Ambient temperature (storage/transport)	-25 °C ... 85 °C
Permissible humidity (operation)	10 % ... 95 % (according to DIN EN 61131-2)
Permissible humidity (storage/transport)	10 % ... 95 % (according to DIN EN 61131-2)

Standards and regulations

Protection class	III (IEC 61140, EN 61140, VDE 0140-1)

Mounting

Mounting type	DIN rail mounting

IB IL 24 DO 16-ME - Digital module

2897253

https://www.phoenixcontact.com/us/products/2897253

Drawings

Dimensional drawing

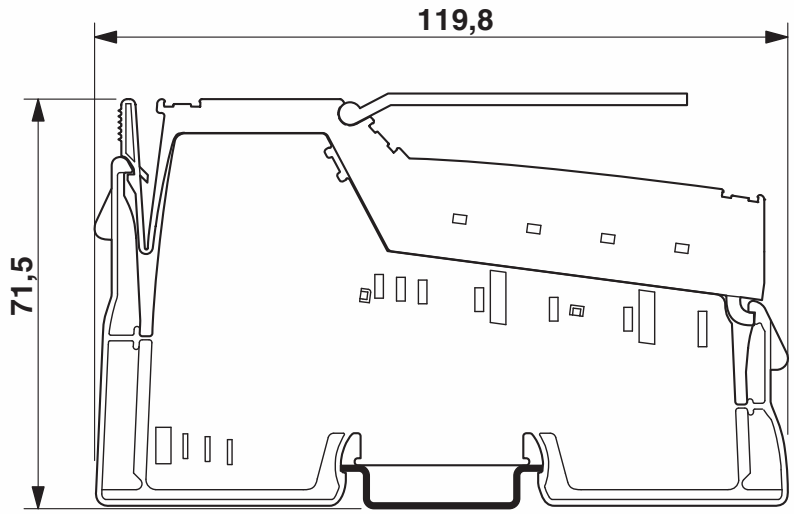

Phoenix Contact 2023 © - all rights reserved
https://www.phoenixcontact.com

Phoenix Contact USA
586 Fulling Mill Road
Middletown, PA 17057, United States
(+717) 944-1300
info@phoenixcon.com

FLEXEDGE® DA50A 1-Sled Scalable IIoT Gateway

RED LION®
a spectris company

FLEXEDGE® Intelligent Edge Automation Platform

CLOUD, EDGE, WIRED, OR WIRELESS, DESIGN YOUR IDEAL INDUSTRY 4.0 OR IIOT APPLICATION WITH EASE.

- Modular architecture allows for easy addition of communication capabilities including cellular, Wi-Fi, serial and USB
- Advanced networking support offers routing, NAT, firewall, and VPN support to ensure data security
- On-board I/O with configurable AI/DI and DO to monitor and control local sensors
- Field upgradeable software to enhance capability of gateway if application changes
- Supports up to 10 simultaneous protocol conversions between over 300 industrial drivers (optional)
- Real-time data logging to microSD card or via FTP (optional)
- Industrial construction for reliable operation
- Intuitive LED status ring
- HDMI™-enabled option (Group 3/4 only)

UK CA CE Ex c UL us LISTED IND.CONT. EQ. E317425 HDMI™ HIGH-DEFINITION MULTIMEDIA INTERFACE

Ordering Guide

MAIN UNIT

PART NUMBER	DESCRIPTION	SW GROUP
DA50A0BNN0000010	FlexEdge 1-Sled Mixed Serial Networking Gateway	Group 1
DA50A0BNN0000020	FlexEdge 1-Sled Mixed Serial Protocol Gateway	Group 2
DA50A0BNN0000030	FlexEdge 1-Sled Mixed Serial Adv IIoT Gateway	Group 3
DA50A1BNN0000030	FlexEdge 1-Sled Mixed Serial Adv IIoT Gateway w/HDMI	Group 3
DA50A0BNN0000040	FlexEdge 1-Sled Mixed Serial Adv Automation Controller	Group 4
DA50A1BNN0000040	FlexEdge 1-Sled Mixed Serial Adv Automation Controller w/HDMI	Group 4

ACCESSORIES

PART NUMBER	DESCRIPTION
DAS00CL9C1SAZ000	4G LTE (CAT1) Cellular Sled for AUS (Telstra)
DAS00CL9C4SAM000	4G LTE (CAT4) Cellular Sled for AMER (AT&T, Generic)
DAS00CL9C4SEU000	4G LTE (CAT4) Cellular Sled for EMEA, SAARC, APAC
DAS00CL9C4SVZ000	4G LTE (CAT4) Cellular Sled for AMER (Verizon)
DAS00PN1EE200000	Dual Ethernet Sled
DAS00PN2221IS000	Dual RS232 Ports Sled (Isolated)
DAS00PN2442IS000	Dual RS485 Ports Sled (Isolated)
DAS00PN2245IS000	Mixed RS232/RS485 Ports Sled (Isolated)
DAS00PN40U400000	1 Port USB 2.0 Host Sled
DAS00PN8CA6IS000	DA Series, CAN Protocol Interface Sled
DAS00PN8J16IS000	DA Series, J1939 Protocol Interface Sled
DAS00WF10N0AM000	802.11n Wi-Fi Sled

See software manual for details on sled operation.

Red Lion Part # DA50A0BNN0000020

DA50A Ordering Guide Cont. and Specifications

SOFTWARE GROUPS

	GROUP 1 NETWORKING	GROUP 2 PROTOCOL	GROUP 3 ADV IIOT	GROUP 4 CONTROLLER
CONFIGURATION				
Web GUI	Y	Y	Y	Y
Crimson®	Y	Y	Y	Y
NETWORKING				
Firewall	Y	Y	Y	Y
RADIUS Auth.	Y	Y	Y	Y
Routing	Y	Y	Y	Y
NAT	Y	Y	Y	Y
IP Fallback	Y	Y	Y	Y
VPN Client/Server	Y	Y	Y	Y
AUTOMATION				
300+ Drivers		Y	Y	Y
IIoT Connectors		Y	Y	Y
OPC UA		Y	Y	Y
SQL Sync			Y	Y
Data Logging			Y	Y
Virtual HMI			Y	Y
Advanced Web Server			Y	Y
IEC CONTROL				
Crimson Control				Y

Specifications

Power Requirements

Supply Voltage: 12-24 VDC +/-15%, Class 2 source

INPUT VOLTAGE	12 V	24 V
Typ. Power DA50A Gateway Only	2.5 W	2.6 W
Max Power DA50A Gateway Only	3.0 W	3.1 W
Max Power DA50A Gateway, with Sled	5.6 W	5.7 W

Battery

3 V Lithium coin cell.

Memory

On Board User Memory: 1 GB of non-volatile Flash memory.
Memory Card: microSD slot accepts Class 5 or better microSD cards up to 256 GB capacity. FAT32, industrial grade.

Communication Properties

USB Device Port: One (1) Isolated USB Type B Port Complies with USB Specification 2.0 (Full Speed)
Ethernet Ports: Two (2) 10BaseT / 100BaseTX RJ45 ports (1500 Vrms Network Isolation)
Serial Ports: Two Serial Ports with Individual Port Isolation
One (1) RS232 Serial RJ12 115200 Bps
One (1) RS485/RS422 Serial RJ45 115200 Bps
HDMI Port: HDMI ™ Connector. Supports 1080p@24 Hz as specified in HDMI 1.4

Digital Output (DOUT)

Configuration: Open Collector, reference to ground
Absolute Maximum IDC: 500 mADC (Vce = 750 mVDC)
Absolute Maximum VDC: 30 VDC (open circuit)
Absolute Minimum VDC: -0.4 VDC (open circuit)

Digital Input (DIN)

Configuration: Unisolated level detection, reference to ground
Active level: 2.5 VDC to 30 VDC
Inactive level: 0 VDC to 1.3 VDC
Absolute Minimum VDC: -0.3 VDC
Absolute Maximum VDC: 33 VDC
Leakage IDC at 5 VDC: 150 µADC

DA50A Specifications Cont.

Analog Input (Shared with Digital Input)
Configuration: Unisolated input, reference to ground
Resolution: 4096 (ADC 12-bit)
VDC per step: 9.483 mVDC (full scale level: 38.8 V)
Accuracy: 2%
Zero level: 0 VDC
Absolute Minimum VDC: -0.3 VDC
Absolute Maximum VDC: 33 VDC
Leakage IDC at 5 VDC: 265.96 µADC typical

Networking Capabilities
Tunneling: IPsec, GRE and Open VPN
IP: NAT, port forwarding, dynamic DNS, DHCP Stateful inspection firewall, IP Fallback and IP transparency
Routing Protocols: VRRP Encapsulation Protocols

Environmental
Without HDMI:
Operating Temperature Range: -40 to 75 °C T_{AMB}
Storage Temperature Range: -40 to 85 °C T_{AMB}
With HDMI Video:
Operating Temperature Range: -20 to 75 °C T_{AMB}
Storage Temperature Range: -20 to 85 °C T_{AMB}
Operating and Storage Humidity: 0 to 85% max. RH non-condensing
Vibration to IEC 60068-2-6: Operational 5-500 Hz, 2 g
Shock to IEC 60068-2-27: Operational 15 g
Altitude: Up to 2000 meters
Installation Category II, Pollution Degree 2 as defined in IEC/EN 60664-1.

Certification & Compliance
CE Approved
EN 61326-1 Immunity to Industrial Locations
Emission CISPR 11 Class A
IEC/EN 61010-1
RoHS Compliant
ATEX Approved
⟨Ex⟩ II 3 G Ex ec IIC T4 Gc
DEMKO 20 ATEX 2268X
IECEx Approved
IECEx UL 20.0007X
UKEX Approved
UL22UKEX2576X
UL Hazardous: File # E317425
Rugged IP30 enclosure

Connections
Wire Strip Length: 0.3" (7.5 mm)
Wire Gauge Capacity: 12 to 24 AWG (3.31 to 0.20 mm^2) copper wire only

Construction
Polycarbonate enclosure with IP30 rating.
Weight:
Without HDMI Port: 13 oz (404.3 g)
With HDMI Port: 14.74 oz (417.87 g)

Mounting
DIN Rail: Attaches to standard “T” profile DIN rail according to EN50022 - 35 x 7.5 and 35 x 15

Warranty
3 years on design and manufacturing defects.
Specifications are subject to change.
Visit www.redlion.net for more information.

Trademark Acknowledgments
The terms HDMI, HDMI High-Definition Multimedia Interface, and the HDMI Logo are trademarks or registered trademarks of HDMI Licensing Administrator, Inc

Red Lion Part # DA50A0BNN0000020

DA50A Dimensions

Dimensions In inches [mm]

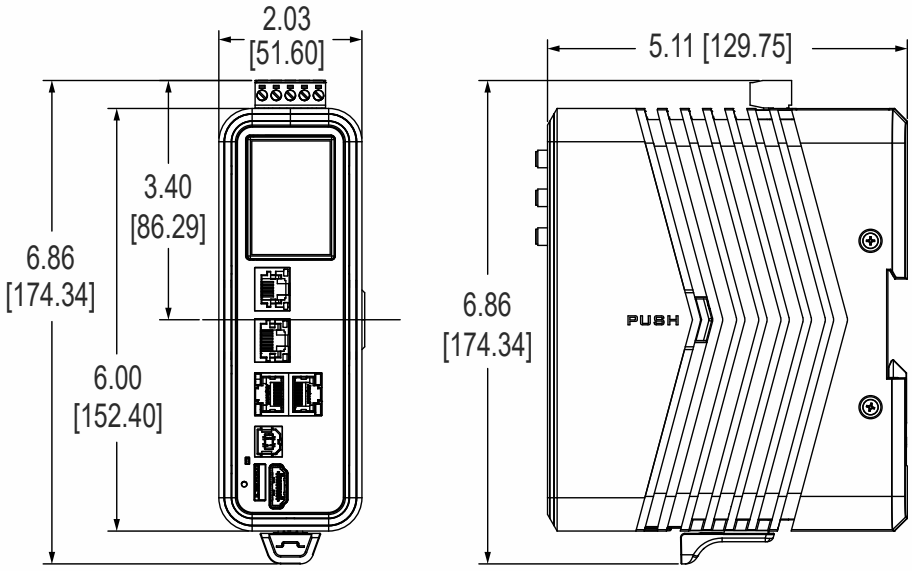

RED LION
a spectris company

For over 50 years, Red Lion has strived to be THE Industrial Data Company™. The company empowers industrial organizations around the world to unlock the value of data by developing and manufacturing innovative solutions to access, connect and visualize their information. Red Lion products make it easy for companies to gain real-time data visibility that drives productivity. Red Lion is part of Spectris plc, the experts in providing insight through precision measurement. For more information, please visit www.redlion.net.

www.redlion.net
contact us

©2020-2023 Red Lion Controls, Inc. All rights reserved. Red Lion, the Red Lion logo, Crimson, FlexEdge and THE Industrial Data Company are trademarks of Red Lion Controls, Inc. All other company and product names are trademarks of their respective owners.

FactoryTalk® View Site Edition

Powerful, scalable visualization solutions

To meet plant floor expectations, HMI software must meet the demands of multiple stakeholders.

- Engineering and Maintenance demand ways to quickly develop applications, scale architectures, and easily maintain systems once deployed.
- Operations demands easy to understand display screens, quick access to alarming, and system-wide diagnostics.
- Production Information Technology (IT) demands system-wide security, web capabilities, highly available systems and alignment with virtualized solutions.

FactoryTalk View Site Edition (SE) meets the demands of each of these groups, providing robust and reliable functionality in a single software package that scales from a stand-alone HMI system to a distributed visualization solution. With FactoryTalk View SE, HMI challenges in process, batch and discrete applications are managed in a single software solution that enables critical visibility in realtime when and where you need it.

Features and Benefits

Premier integration with Logix controllers

- No need to create and maintain a separate HMI tag database – define tags once in the Logix controller, then access them throughout your system.
- Referencing Logix controller tags directly from HMI displays provides optimized communications and display of data.
- Subscribe to Logix controller-based alarms to display, annunciate, and manage them in the HMI.
- Logix extended tag properties with translated text reside in the controller and can be accessed by the HMI, reducing duplication errors and streamlining project design.

Productivity

- Take advantage of rich, reusable graphics and animation capabilities with Symbol Factory graphic library, Global Objects, and Rockwell Automation Process Object Library faceplates.
- Integration with ThinManager software enables a single sign-in for operators by passing login credentials from ThinManager to FactoryTalk View SE clients.
- Application edits can be automatically rolled out to a running system .

Alarm configuration and management

- View and interact with alarm conditions throughout the architecture with easy-to-use graphical alarm objects.
- Categorize alarms into alarm groups to control how they are viewed, filtered, and annunciated.
- Align with ISA 18.2 alarm management standards with built-in alarm features.

Mobility

- Mobile HMI provides continuous system visibility anytime, anywhere.
- Extend your applications to your favorite iOS or Android mobile device for improved real-time decision making.
- Publish HMI screens as-is, or create mobile device-specific screens for better visibility on a smaller screen.

Rockwell Automation

Engineering and Maintenance

Delivering tools to quickly develop applications, scale architectures, and easily maintain systems.

DESIGN TIME EFFECTIVENESS

- FactoryTalk® View Studio provides a centralized development environment for managing and editing any components in the HMI application.
- Make and save edits to the application while the system is running with changes rolled out to clients dynamically.
- Optimize development effort by creating master graphical Global Objects that can be reused on multiple displays. At runtime, use parameters to pass and display data from multiple sources on different instances of the same Global Object.
- Quickly find and replace tags or string values throughout the application using the Find/Replace function. Then leverage the Cross-Reference capability to open a list of tag references in the project with a hot link to jump to each specific reference.
- Use the test run feature for screen validation when tags or parameter files are connected to a data source.
- Multi-language support with runtime language switching: multiple-language implementations can be accomplished by defining language context in simple to use lookup files.
- Easily edit displays, alarms, and tags with XML Export.
- Rapidly configure and control your application with pre-defined faceplates from the Rockwell Automation Library of Process Objects that link to corresponding control elements in the Logix controller.
- Integration with Studio 5000 Architect™ allows access to reusable engineering content from previous projects to speed development.

SATISFYING VALIDATION REQUIREMENTS

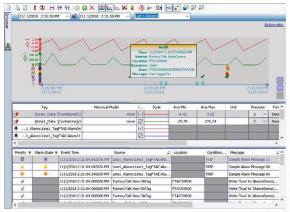

FactoryTalk View SE software can aid in manufacturing environments subject to regulatory compliance or in any system looking to track critical operator actions. FactoryTalk View SE software can enforce user verification, as well as E-Signature approval by a second user, before a change is committed. All HMI operator activity can be tracked in a system-wide audit trail. When FactoryTalk View SE software is deployed with FactoryTalk AssetCentre software, HMI applications can be automatically backed up and stored in a version control system. Operator actions (audits) can be displayed, along with process data values and alarm events, on the TrendPro trend object – creating a comprehensive view of alarms, operator actions, and system reaction.

SCALABLE ARCHITECTURE TO MEET YOUR NEEDS

- Scale from single station to multi-client / multi-server systems.
- Architect the right solution to meet today's needs while supporting future expansion as your system grows.
- Expand the capabilities of the system by integrating and sharing data with other Rockwell Software products.

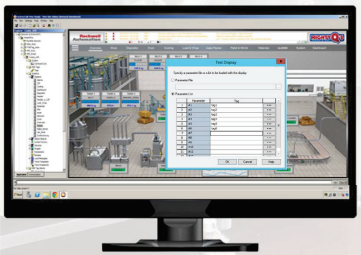

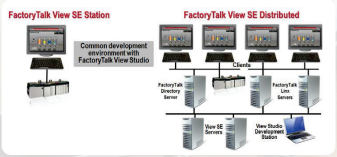

Build a better view with FactoryTalk View Site Edition.

Designing and testing displays is simple with features like parameterized screen testing. This allows you to validate that variable tags passed to a display are working as expected.

Operations

Delivering robust applications with easy to understand display screens, quick access to alarming, and system-wide diagnostics.

EXTENSIVE ALARM CAPABILITIES

Alarm monitoring is a critical function the operator must perform. The ability to quickly visualize the situation and navigate to a more detailed screen is essential when monitoring an alarm condition. Alarm management components in an HMI system must provide reliable, real-time visibility into critical conditions that require immediate attention. FactoryTalk Alarms and Events allows:

- Viewing of, and interaction with, alarm conditions throughout the architecture with easily configured Alarm Summary and Alarm Log graphical objects.
- Alarm Grouping provides logical organization and management of alarms.
- Support for server tag-based alarms, where data points in the controller are polled by FactoryTalk Alarms and Events looking for a state change as an alarm condition.
- Support for Logix instruction-based alarms, where alarms are configured in controller alarm logic instructions, and alarm status is detected by the controller as that logic is executed. Alarms are time stamped and pushed to the HMI only on state changes, reducing network traffic and resulting in more accurate alarm time stamps.
- Support for Logix tag-based alarms, where alarms are defined on tags, and are evaluated in the controller. Logix tag-based alarms are evaluated in the controller separately from logic execution, resulting in an efficient alarm system using less controller memory.

SYSTEM WIDE DIAGNOSTICS

FactoryTalk® products report, route and store information about events that happened in a system and correlate the information across multiple devices to provide a system-wide diagnostic solution for troubleshooting and determining root cause.

RECIPE MANAGEMENT

Define a group of tag values as a recipe with FactoryTalk View SE RecipePro+. Recipe functionality makes it efficient to download or upload many tag values simultaneously, often for machine setup or changing production settings. The RecipePro+ recipe manager allows for editing of recipes at both design and run time, and stores recipe definitions in an external recipe file. This makes it easy to create, view, edit, or backup recipes outside of the HMI system.

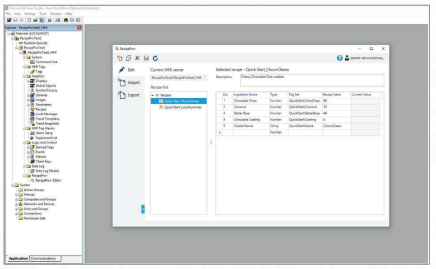

For RSView32 users, RecipePro+ provides automatic conversion of existing RSView32 RecipePro projects, making it easier to migrate your visualization solution to FactoryTalk View SE software.

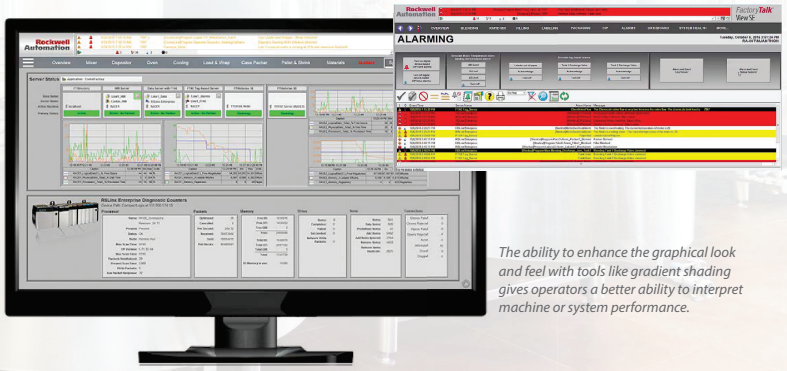

FactoryTalk Alarms and Events capability aligns with the ISA 18.2 alarming standard. You can select alarms to Shelve, which removes them from visibility for a configured amount of time.

The ability to enhance the graphical look and feel with tools like gradient shading gives operators a better ability to interpret machine or system performance.

Production IT

Delivering system-wide security capabilities, web capabilities, and support for virtualization and high availability.

Information convergence between manufacturing and business systems is crucial to drive greater business agility. To support, accelerate, and secure this convergence, Rockwell Automation and Cisco Systems have collaborated to develop **Converged Plantwide Ethernet (CPwE) Architectures** to provide education, design guidance, recommendations and best practices.

STAY SECURE

Security on the production floor is critical. Restricting who has access to the system and tracking changes when they are made is expected in today's environment. With FactoryTalk®, production system security can be integrated with an existing IT Infrastructure. This works by leveraging Windows authentication services and other security access procedures such as enforcing unique passwords or automatically locking out accounts after unsuccessful logon attempts. Security administrators have the ability to further restrict access based on line-of-sight for machine level applications.

REDUCE RISK BY MAINTAINING VISIBILITY

Implementing a redundant server configuration ensures visibility to the system should a hardware or network failure occur. The underlying FactoryTalk services provide health detection between FactoryTalk View components and automatically switch over to the secondary server in the event of a failed primary server. All clients are then switched over to the new active server to allow continuity for operations personnel to control vital plant processes in realtime.

STEP INTO THE WORLD OF VIRTUALIZATION

All components of a FactoryTalk View SE system have been tested in a virtualized environment and come with VMware® Ready Status. To further support virtualization, Rockwell Automation offers **Virtual Image Templates** that provide pre-installed FactoryTalk View SE on the appropriate Microsoft operating system, minimizing the setup and configuration time required to deploy FactoryTalk View SE in a traditional IT environment.

Technology Partnerships

Microsoft

Creatively applied technology can drive innovation in many ways – from manufacturing methods to business models. Rockwell Automation® and Microsoft® have joined forces to accelerate this innovation for both Operations and IT practitioners, empowering them to apply solutions in transformative and powerful new ways. **Learn more**

Cisco Systems

Rockwell Automation and Cisco are committed to being the most valuable resource in the industry to help manufacturers improve business performance by bridging the technical and cultural gaps between plant-floor and higher-level information systems. Through successful collaboration on products, services and educational resources, these industry leaders enable manufacturers to converge their network infrastructure and tightly integrate technical and business systems using EtherNet/IP – the world's leading open industrial Ethernet network. **Learn more**

Get More Information

For ordering information, contact your local Rockwell Automation® sales office or Allen-Bradley® distributor. Or learn more by visiting **our website.**

Extending Your HMI

Delivering anytime, anywhere access to contextualized manufacturing data for more informed, faster business decisions.

HISTORICAL AND TRENDING DATA AT YOUR FINGERTIPS

FactoryTalk® Historian establishes a reliable foundation for capturing the data you need to improve operations. Powerful reporting and trending tools provide critical insight into performance parameters and are available at high speed and full resolution for any control system or human-machine interface (HMI) software. **Learn more**

THE GATEWAY TO A WEALTH OF INFORMATION

Most of what manufacturers need to know about their production operations is buried in their greatest hidden asset—their manufacturing data. FactoryTalk VantagePoint EMI is the gateway to that data and enables individuals to explore the wealth of information buried within the data. This software offers mobile access via any smartphone or tablet, and the ability to view web-based reports and KPI dashboards delivered through the software portal. **Learn more**

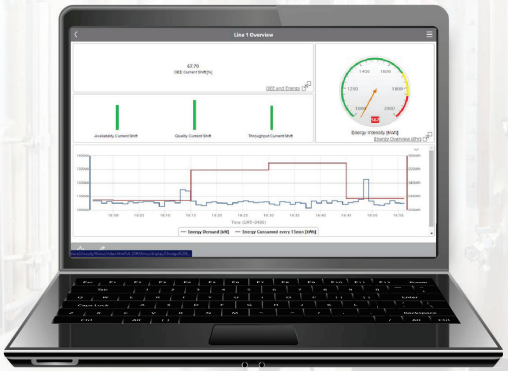

Real-time data coming from the controller can be contextualized against historical data from FactoryTalk Historian.

MAKE YOUR HMI MOBILE

FactoryTalk ViewPoint allows you to view and interact with your FactoryTalk View SE applications from a web browser or your favorite mobile device, providing continuous system visibility and improving real-time decision-making. As an add-on to FactoryTalk® View SE and PanelView™ Plus, FactoryTalk ViewPoint delivers:

- A truly interactive web based HMI experience without requiring any additional development.
- Full support for graphics and configured animations.
- Configurable security to provide users with read only or read-write access.
- Real-time and historical trending.
- A maintenance free browser-based client with no additional software to install and configure.
- Support for Windows, iOS, and Android with HTML 5 rendering.
- For more information, view the **Make Your HMI Mobile** video.

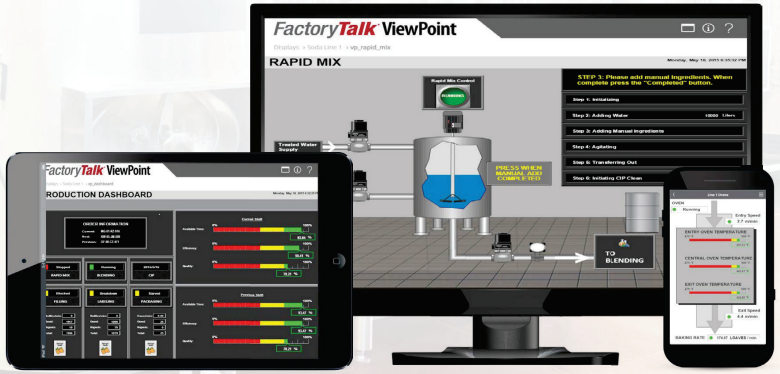

Rockwell FactoryTalk

Allen-Bradley, FactroyTalk, and PlantPAx are trademarks of Rockwell Automation, Inc.
All other trademarks and registered trademarks are the property of their respective owners.

www.rockwellautomation.com

Power, Control and Information Solutions Headquarters

Americas: Rockwell Automation, 1201 South Second Street, Milwaukee, WI 53204-2496 USA, Tel: (1) 414.382.2000, Fax: (1) 414.382.4444
Europe/Middle East/Africa: Rockwell Automation NV, Pegasus Park, De Kleetlaan 12a, 1831 Diegem, Belgium, Tel: (32) 2 663 0600, Fax: (32) 2 663 0640
Asia Pacific: Rockwell Automation, Level 14, Core F, Cyberport 3, 100 Cyberport Road, Hong Kong, Tel: (852) 2887 4788, Fax: (852) 2508 1846

Publication FTALK-PP013J-EN-P – March 2019
Supersedes Publication FTALK-PP013I-EN-P – February 2018

Copyright © 2019 Rockwell Automation, Inc. All Rights Reserved. Printed in USA.

Schneider Part # LC1D258BL

Product data sheet

Specifications

IEC contactor, TeSys Deca, nonreversing, 40A resistive, 4 pole, 2 NO and 2 NC, low consumption 24VDC coil, open style

LC1D258BL

Main

Range of Product	TeSys Deca
Product or Component Type	Contactor
Device short name	LC1D
Contactor application	Resistive load
Utilisation category	AC-1
Poles description	4P
[Ue] rated operational voltage	Power circuit <= 690 V AC 25...400 Hz
[Ie] rated operational current	40 A (at <140 °F (60 °C)) at <= 440 V AC AC-1 for power circuit
[Uc] control circuit voltage	24 V DC

Complementary

Compatibility code	LC1D
Pole contact composition	2 NO + 2 NC
Protective cover	With
[Ith] conventional free air thermal current	10 A (at 140 °F (60 °C)) for signalling circuit 40 A (at 140 °F (60 °C)) for power circuit
Irms rated making capacity	140 A AC for signalling circuit conforming to IEC 60947-5-1 250 A DC for signalling circuit conforming to IEC 60947-5-1 450 A at 440 V for power circuit conforming to IEC 60947
Rated breaking capacity	450 A at 440 V for power circuit conforming to IEC 60947
[Icw] rated short-time withstand current	240 A 104 °F (40 °C) - 10 s for power circuit 380 A 104 °F (40 °C) - 1 s for power circuit 50 A 104 °F (40 °C) - 10 min for power circuit 120 A 104 °F (40 °C) - 1 min for power circuit 100 A - 1 s for signalling circuit 120 A - 500 ms for signalling circuit 140 A - 100 ms for signalling circuit
Associated fuse rating	10 A gG for signalling circuit conforming to IEC 60947-5-1 63 A gG at <= 690 V coordination type 1 for power circuit 40 A gG at <= 690 V coordination type 2 for power circuit
Average impedance	2 mOhm - Ith 40 A 50 Hz for power circuit
Power dissipation per pole	3.2 W AC-1

Disclaimer: This documentation is not intended as a substitute for and is not to be used for determining suitability or reliability of these products for specific user applications

Schneider Part # LC1D258BL

[Ui] rated insulation voltage	Power circuit 690 V IEC 60947-4-1 Power circuit 600 V CSA Power circuit 600 V UL Signalling circuit 690 V IEC 60947-1 Signalling circuit 600 V CSA Signalling circuit 600 V UL
overvoltage category	III
pollution degree	3
[Uimp] rated impulse withstand voltage	6 kV IEC 60947
Safety reliability level	B10d = 1369863 cycles contactor with nominal load EN/ISO 13849-1 B10d = 20000000 cycles contactor with mechanical load EN/ISO 13849-1
Mechanical durability	30 Mcycles
Electrical durability	1.4 Mcycles 40 A AC-1 <= 440 V
Control circuit type	DC low consumption
Coil technology	Built-in bidirectional peak limiting diode suppressor
Control circuit voltage limits	0.1...0.3 Uc (-40…140 °F (-40…60 °C)):drop-out DC 0.8...1.25 Uc (-40…140 °F (-40…60 °C)):operational DC
Inrush power in W	2.4 W 68 °F (20 °C))
Hold-in power consumption in W	2.4 W 68 °F (20 °C)
Operating time	77 ±15 % ms closing 25 ±20 % ms opening
Time constant	40 ms
Maximum operating rate	3600 cyc/h at 60 °C
Connections - terminals	Control circuit: screw clamp terminals 1 0.002…0.006 in² (1…4 mm²) - cable stiffness: flexible without cable end Control circuit: screw clamp terminals 2 0.002…0.006 in² (1…4 mm²) - cable stiffness: flexible without cable end Control circuit: screw clamp terminals 1 0.002…0.006 in² (1…4 mm²) - cable stiffness: flexible with cable end Control circuit: screw clamp terminals 2 0.002…0.004 in² (1…2.5 mm²) - cable stiffness: flexible with cable end Control circuit: screw clamp terminals 1 0.002…0.006 in² (1…4 mm²) - cable stiffness: solid without cable end Control circuit: screw clamp terminals 2 0.002…0.006 in² (1…4 mm²) - cable stiffness: solid without cable end Power circuit: screw clamp terminals 1 0.004…0.02 in² (2.5…10 mm²) - cable stiffness: flexible without cable end Power circuit: screw clamp terminals 2 0.004…0.02 in² (2.5…10 mm²) - cable stiffness: flexible without cable end Power circuit: screw clamp terminals 1 0.004…0.02 in² (2.5…10 mm²) - cable stiffness: flexible with cable end Power circuit: screw clamp terminals 2 0.004…0.02 in² (2.5…10 mm²) - cable stiffness: flexible with cable end Power circuit: screw clamp terminals 1 0.004…0.02 in² (2.5…16 mm²) - cable stiffness: solid without cable end Power circuit: screw clamp terminals 2 0.004…0.02 in² (2.5…16 mm²) - cable stiffness: solid without cable end
Tightening torque	Control circuit 15.05 lbf.in (1.7 N.m) screw clamp terminals flat Ø 6 mm Control circuit 15.05 lbf.in (1.7 N.m) screw clamp terminals Philips No 2 Control circuit 15.05 lbf.in (1.7 N.m) screw clamp terminals pozidriv No 2 Power circuit 15.9 lbf.in (1.8 N.m) screw clamps terminals flat Ø 6 mm Power circuit 15.9 lbf.in (1.8 N.m) screw clamps terminals Philips No 2 Power circuit 15.9 lbf.in (1.8 N.m) screw clamp terminals pozidriv No 2
Auxiliary contact composition	1 NO + 1 NC
Auxiliary contacts type	Mechanically linked 1 NO + 1 NC IEC 60947-5-1 Mirror contact 1 NC IEC 60947-4-1
Signalling circuit frequency	25...400 Hz
Minimum switching voltage	17 V for signalling circuit
Minimum switching current	5 mA for signalling circuit

Insulation resistance	> 10 MOhm for signalling circuit
Non-overlap time	1.5 ms on de-energisation between NC and NO contact 1.5 ms on energisation between NC and NO contact
Mounting Support	Rail Plate

Environment

Standards	CSA C22.2 No 14 EN 60947-4-1 EN 60947-5-1 IEC 60947-4-1 IEC 60947-5-1 UL 60947-4-1 IEC 60335-1:Clause 30.2 IEC 60335-2-40:Annex JJ UL 60335-2-40:Annex JJ CSA C22.2 No 60947-4-1
Product Certifications	UL CCC CSA Marine UKCA EAC CB Scheme
IP degree of protection	IP20 front face IEC 60529
Protective treatment	THIEC 60068-2-30
Climatic withstand	IACS E10 exposure to damp heat IEC 60947-1 Annex Q category D exposure to damp heat
Permissible ambient air temperature around the device	-40…140 °F (-40…60 °C) 140…158 °F (60…70 °C) with derating
Operating altitude	0...9842.52 ft (0...3000 m)
Fire resistance	1562 °F (850 °C) IEC 60695-2-1
Flame retardance	V1 conforming to UL 94
Mechanical robustness	Vibrations contactor open 2 Gn, 5...300 Hz) Vibrations contactor closed 4 Gn, 5...300 Hz) Shocks contactor closed 15 Gn for 11 ms) Shocks contactor open 8 Gn for 11 ms)
Height	3.6 in (91 mm)
Width	1.8 in (45 mm)
Depth	4.2 in (107 mm)
Product Weight	1.290 lb(US) (0.585 kg)

Ordering and shipping details

Category	US10I1222354
Discount Schedule	0I12
GTIN	3389110453522
Returnability	Yes
Country of origin	ID

Packing Units

Unit Type of Package 1	PCE
Number of Units in Package 1	1

Package 1 Height	2.17 in (5.5 cm)
Package 1 Width	3.74 in (9.5 cm)
Package 1 Length	4.72 in (12.0 cm)
Package 1 Weight	22.5 oz (637.0 g)

Contractual warranty

Warranty	18 months

Schneider Part # LC1D258BL

Environmental Data

Schneider Electric aims to achieve Net Zero status by 2050 through supply chain partnerships, lower impact materials, and circularity via our ongoing “Use Better, Use Longer, Use Again” campaign to extend product lifetimes and recyclability.

Environmental Data explained >

How we assess product sustainability >

Environmental footprint

Carbon footprint (kg CO2 eq, Total Life cycle)	37
Environmental Disclosure	Product Environmental Profile

Use Better

Materials and Substances

Packaging made with recycled cardboard	No
Packaging without single use plastic	No
SCIP Number	50ae7612-fd2e-41e4-a369-50d0dea6e592
China RoHS Regulation	China RoHS declaration
California proposition 65	WARNING: This product can expose you to chemicals including: Antimony oxide & Antimony trioxide, which is known to the State of California to cause cancer. For more information go to www.P65Warnings.ca.gov
PVC free	Yes

Use Again

Repack and remanufacture

Circularity Profile	End of Life Information
WEEE	The product must be disposed on European Union markets following specific waste collection and never end up in rubbish bins.
Take-back	No

Schweitzer Part # 0700G11B1BOX76850300

SEL-700G Family of Generator and Intertie Protection Relays

Basic to Comprehensive Protection

SEL-700G0, SEL-700G1

Small, Medium, and Large Generators

Intertie Protection

SEL-700GT

Intertie and Generator

Basic Dual-Feeder Overcurrent Protection

SEL-700GW

Wind Generator

New Features

- IEC 61850 simulation mode, local/remote control authority, and functional naming support for easy commissioning and control.
- Rapid Spanning Tree Protocol (RSTP) provides faster recovery in response to network changes and failures in switched mode applications.
- Disconnect control from the Bay Screens application.
- Three-position disconnects for increased safety.
- A built-in web server that simplifies access to relay data and supports firmware upgrade.
- Faster firmware downloads via the Ethernet port.
- IEEE 1588-2008 firmware-based Precision Time Protocol (PTP) provides ease of integration.
- EtherNet/IP provides ease of integration for industrial automation applications.
- Visualization of system parameters and synchronization of your generator to your system with built-in Synchroscope/Auto Synchronizer applications on the touchscreen display.

Schweitzer Part # 0700G11BOX76850300

Major Features and Benefits

The SEL-700G family of protection relays provides unsurpassed protection, integration, and control features in a flexible, compact, and cost-effective package.

- **Basic Generator Protection Features** (SEL-700G**0**)**:** Ground differential; sensitive restricted earth fault; thermal overload; phase, negative-sequence, residual-ground, and neutral-ground overcurrent elements for backup; residual-ground and neutral-ground time-overcurrent elements; directional residual-ground and neutral-ground overcurrent elements; current unbalance element; voltage-controlled, voltage-restrained time-overcurrent element for backup protection; breaker failure protection for three-pole breaker; under- and overvoltage elements; inverse-time over- and undervoltage elements; loss-of-potential element; volts/hertz or overexcitation protection; directional power elements; loss-of-field; over- and underfrequency protection elements; off-frequency time accumulators; rate-of-change-of- frequency elements; vector shift elements for islanding detection; inadvertent energization protection; RTD protection (requires internal or external SEL-2600 RTD option); field ground using an SEL-2664 Field Ground Module.
- **Optional Generator Protection Features** (SEL-700G**0+,** SEL-700G**1,** SEL-700G**1+):** Generator synchronism-check elements; synchronism-check under- and overvoltage elements; inverse-time over- and undervoltage elements; autosynchronism; synchroscope; backup compensator distance elements; out-of-step elements; vector shift elements for islanding detection; 100% stator ground protection elements; and dual-slope current differential protection with harmonic blocking and restraint elements to provide sensitive and secure protection. The high-security mode provides additional security against CT saturation during external events including external transformer energization, external faults, etc.
- **Intertie Protection Features** (SEL-700G**T**)**:** Phase, negative-sequence, and residual-ground overcurrent elements for overcurrent, time-overcurrent, and directional overcurrent protection; breaker failure protection for three-pole breaker; under- and overvoltage elements; inverse-time over- and undervoltage elements; loss-of-potential element; directional power elements; over- and underfrequency protection elements; rate-of-change-of-frequency elements; vector shift elements for islanding detection; tie synchronism-check elements; synchroscope; and RTD protection (requires internal or external SEL-2600 RTD option).
- **Optional Intertie Protection Features** (SEL-700G**T+).** Addition of basic generator protection features, as shown above for the SEL-700G0, to create intertie and generator protection. The relay also includes generator synchronism-check, synchroscope, and autosynchronism functions.
- **Wind Generator Protection Features** (SEL-700G**W).** The SEL-700GW is configured with two sets of phase, negative-sequence, and residual-ground overcurrent elements, and phase, negative-sequence, and residual-ground time-overcurrent elements to provide dual-feeder protection in a multiple wind generator network application. The relay also includes three-pole breaker failure protection for two breakers.
- **Generator Monitoring.** Monitor ambient and generator winding temperature using optional analog inputs or RTDs and protect the generator from thermal damage. Use off-frequency time accumulators and protect steam turbine blades from fatigue failures because of off-frequency vibration.
- **Operator Controls.** Eight programmable front-panel pushbuttons each with two programmable tricolor LEDs allow for a wide variety of uses, including easy trip and close control and status indications for a breaker. Implement local and remote operator control schemes using 32 local and 32 remote control bits.
- **Integrated Web Server**. Log in to the built-in web server to view metering and monitoring data and to download events, Sequential Events Recorder (SER), etc. Use the web server to view relay settings and to perform relay firmware upgrades.
- **Relay and Logic Settings Software.** ACSELERATOR QuickSet® SEL-5030 Software reduces engineering costs for relay settings and logic programming. The tools in QuickSet make it easy to develop SELOGIC® control equations. Use the built-in phasor display to verify proper CT polarity and phasing. Use the synchroscope to watch the autosynchronism controls.
- **Metering and Reporting.** Built-in metering functions eliminate separately mounted metering devices. Analyze Sequential Events Recorder (SER) reports and oscillographic event reports for rapid commissioning, testing, and post-fault diagnostics. Unsolicited SER protocol allows station-wide collection of binary SER messages.
- **Front-Panel HMI.** Navigate the relay HMI using a 2 x 16-character LCD or optional 5-inch, color, 800 x 480-pixel touchscreen display.

Schweitzer Part # 0700G11BQX76850300
Schweitzer Part # 0700G11B1BOX76850300

- **Additional Standard Features.** Includes Modbus® RTU, Event Messenger support, MIRRORED BITS® communications, built-in web server and communications, load profile report, 128 remote analogs, support for 12 external RTDs (SEL-2600 module), IRIG-B input, advanced SELOGIC, configurable labels, IEEE C37.118-compliant synchrophasor protocol, and fiber-optic serial port.
- **Optional Features.** Select from a wide offering of optional features, including SNTP (Simple Network Time Protocol), IEEE 1588-2008 firmware-based PTP, IEC 61850 Edition 2, Modbus® TCP/IP, EtherNet/IP, DNP3 LAN/WAN, DNP3 serial, IEC 60870-5-103, RSTP, PRP, 10 internal RTDs, voltage/current inputs, additional EIA-232 or EIA-485 communications ports, and single or dual, copper wire or fiber-optic Ethernet ports. Several analog and digital I/O options are available. These include 4 AI/4 AO, 4 DI/4 DO, 8 DI, 8 DO, 3 DI/4 DO/1 AO, 4 DI/3 DO, and 14 DI. Conformal coating for chemically harsh and/or high-moisture environments is available as an option.
- **Language Support.** Choose English or Spanish for your serial ports, including the front-panel serial port. The standard relay front-panel overlay is in English; a Spanish overlay is available as an ordering option.

Intertie Standards and Compliance

The SEL-700GT Intertie Protection Relay provides comprehensive multifunction protection, control, and monitoring for intertie applications as well as intertie generator applications. The SEL-700GT Relay capabilities meet or exceed the protection and control requirements specified in the ANSI/IEEE Std 1547-2018, *Standard for Interconnecting Distributed Resources with Electric Power Systems*.

Functional Overview

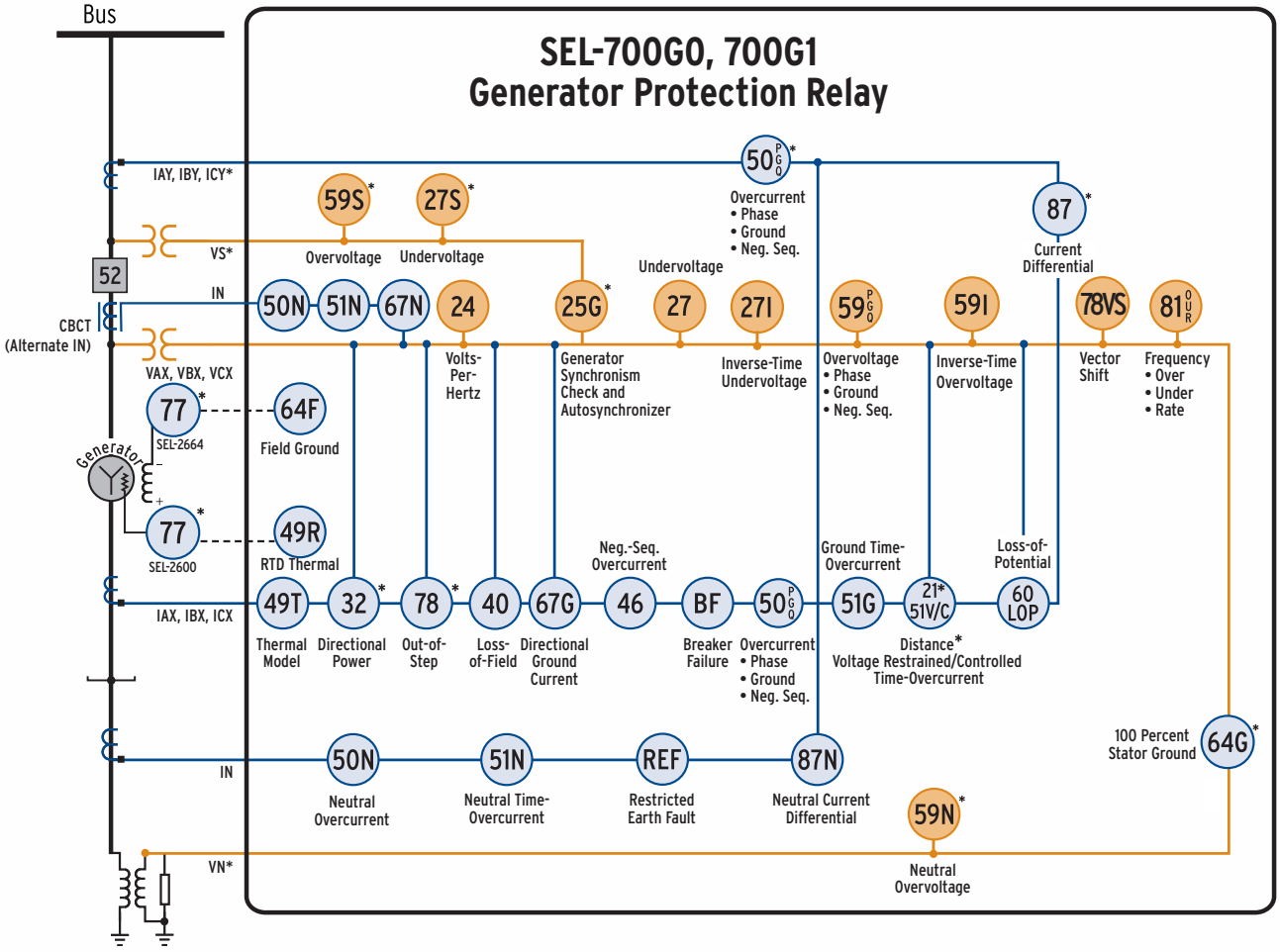

- Sequential Events Recorder
- Event Reports
- Web Server
- SEL ASCII, Ethernet*, Modbus TCP*, SNTP*, IEEE 1588-2008 firmware-based PTP*, IEC 61850*, IEC 60870-5-103*, EtherNet/IP, RSTP*, PRP*, DNP3 LAN/WAN*, DNP3 Serial*, Modbus RTU, Telnet*, FTP*, PTP*, and DeviceNet™ Communications*
- Eight Front-Panel Target LEDs, Six of Which Are Programmable
- Two Inputs and Three Outputs Standard
- I/O Expansion*—Additional Contact Inputs, Contact Outputs, Analog Inputs, Analog Outputs, and RTD Inputs
- Single or Dual Ethernet Copper or Fiber-Optic Communications Port*
- Battery-Backed Clock, IRIG-B Time Synchronization
- Instantaneous Metering, Demand Metering
- Eight Programmable Pushbuttons Each With Two Tricolor LEDs
- Off-Frequency Operation Time Accumulators
- Advanced SELogic Control Equations
- 32 Programmable Display Messages
- Mirrored Bits Communications
- Synchrophasor (IEEE C37.118)
- Breaker Wear Monitor
- Event Messenger Compatible
- Front-Panel HMI With 2 x 16-Character LCD or Optional 5-Inch, Color, 800 x 480-Pixel Touchscreen Display

*Optional

Figure 1 SEL-700G0, SEL-700G1 Generator Protection Relay

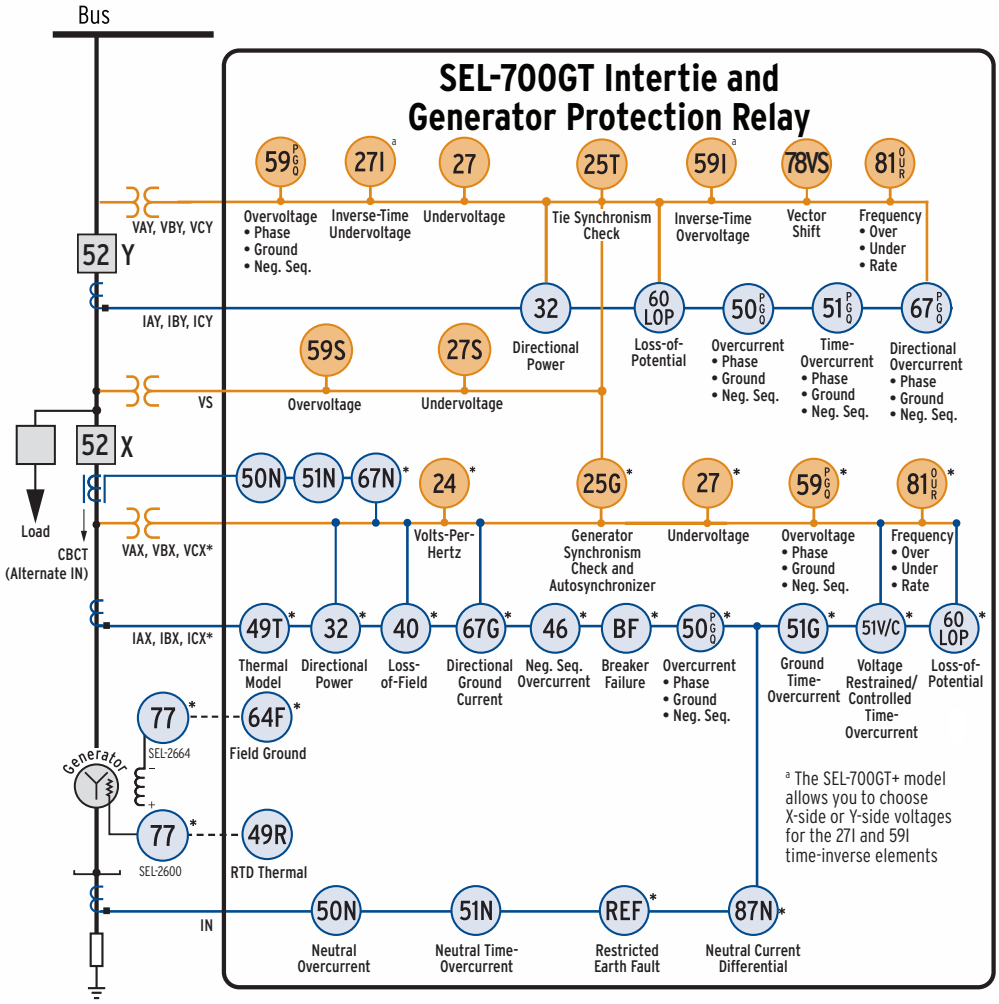

- Sequential Events Recorder
- Event Reports
- Web Server
- SEL ASCII, Ethernet*, Modbus TCP*, SNTP*, IEEE 1588 firmware-based PTP* IEC 61850*, IEC 60870-5-103*, EtherNet/IP, RSTP*, PRP*, DNP3 LAN/WAN*, DNP3 Serial*, Modbus RTU, Telnet*, FTP*, PTP*, and DeviceNet Communications*
- Eight Front-Panel Target LEDs, Six of Which Are Programmable
- Two Inputs and Three Outputs Standard
- I/O Expansion*—Additional Contact Inputs, Contact Outputs, Analog Inputs, Analog Outputs, and RTD Inputs
- Single or Dual Ethernet Copper or Fiber-Optic Communications Port*
- Battery-Backed Clock, IRIG-B Time Synchronization
- Instantaneous Metering, Demand Metering
- Eight Programmable Pushbuttons Each With Two Tricolor LEDs
- Off-Frequency Operation Time Accumulators
- Advanced SELogic Control Equations
- 32 Programmable Display Messages
- Mirrored Bits Communications
- Synchrophasor (IEEE C37.118)
- Breaker Wear Monitor
- Event Messenger Compatible
- Front-Panel HMI With 2 x 16-Character LCD or Optional 5-Inch, Color, 800 x 480-Pixel Touchscreen Display

*Optional

Figure 2 SEL-700GT Intertie and Generator Protection Relay

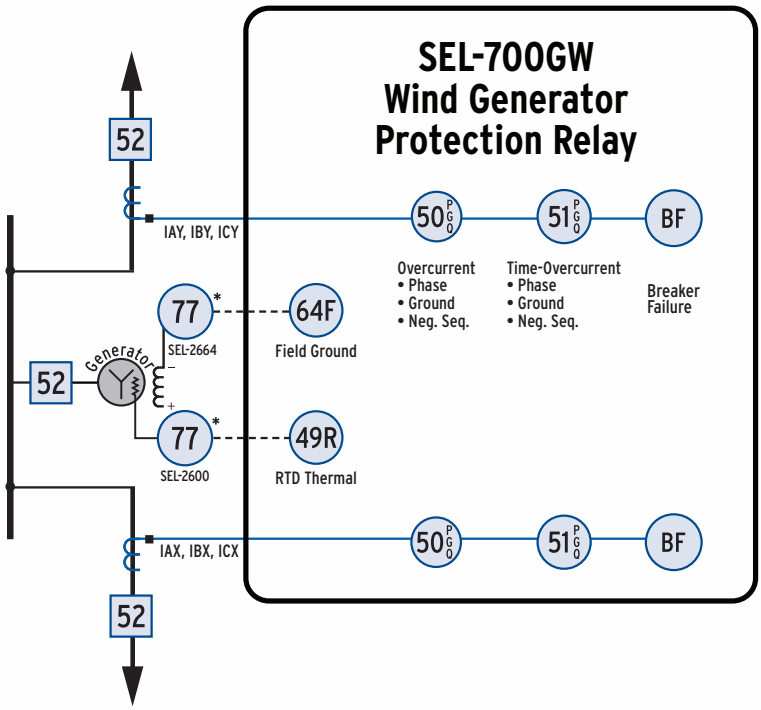

- Sequential Events Recorder
- Event Reports
- Web Server
- SEL ASCII, Ethernet*, Modbus TCP*, SNTP*, IEEE 1588-2008 firmware-based PTP*, IEC 61850*, IEC 60870-5-103*, EtherNet/IP, RSTP*, PRP*, DNP3 LAN/WAN*, DNP3 Serial*, Modbus RTU, Telnet*, FTP*, PTP*, and DeviceNet Communications*
- Eight Front-Panel Target LEDs, Six of Which Are Programmable
- Two Inputs and Three Outputs Standard
- I/O Expansion*—Additional Contact Inputs, Contact Outputs, Analog Inputs, Analog Outputs, and RTD Inputs
- Single or Dual Ethernet Copper or Fiber-Optic Communications Port*
- Battery-Backed Clock, IRIG-B Time Synchronization
- Instantaneous Metering, Demand Metering
- Eight Programmable Pushbuttons Each With Two Tricolor LEDs
- Off-Frequency Operation Time Accumulators
- Advanced SELogic Control Equations
- 32 Programmable Display Messages
- Mirrored Bits Communications
- Synchrophasor (IEEE C37.118)
- Breaker Wear Monitor
- Event Messenger Compatible
- Front-Panel HMI With 2 x 16-Character LCD or Optional 5-Inch, Color, 800 x 480-Pixel Touchscreen Display

*Optional

Figure 3 SEL-700GW Wind Generator Protection Relay

Protection Features

AC Analog Inputs

The SEL-700G has between 6 and 14 analog inputs, depending on the model and options selected. All analog inputs are recorded for event reporting and oscillography.

Table 1 shows the current and voltage inputs for the different models available. Current inputs are 1 A or 5 A nominal rating and voltage inputs are 300 V continuous rating.

Table 1 Current (ACI) and Voltage (AVI) Card Selection for SEL-700G Models

Model	Description	Slot Z Card (MOT Digits)	Slot Z Inputs	Slot E Card (MOT Digits)	Slot E Inputs
700G0	Basic generator protection	4 ACI/3 AVI (81, 82, 85, 86)	IAX, IBX, ICX, IN, VAX, VBX, VCX	(OX)	
700G0+	Basic generator protection plus (see *Table 2* for additional protection elements)	4 ACI/3 AVI (81, 82, 85, 86)	IAX, IBX, ICX, IN, VAX, VBX, VCX	2 AVI (74)	VS, VN
700G1	Full generator protection	4 ACI/3 AVI (81, 82, 85, 86)	IAX, IBX, ICX, IN, VAX, VBX, VCX	3 ACIE (73, 77)	IAY, IBY, ICY
700G1+	Full generator protection plus (see *Table 2* for additional protection elements)	4 ACI/3 AVI (81, 82, 85, 86)	IAX, IBX, ICX, IN, VAX, VBX, VCX	3 ACI/2 AVI (72, 76)	IAY, IBY, ICY, VS, VN
700GT	Intertie protection	1 ACI (84, 88)	IN	3 ACI/4 AVI (71, 75)	IAY, IBY, ICY, VS, VAY, VBY, VCY
700GT+	Intertie and generator protection	4 ACI/3 AVI (81, 82, 85, 86)	IAX, IBX, ICX, IN, VAX, VBX, VCX	3 ACI/4 AV (71, 75)	IAY, IBY, ICY, VS, VAY, VBY, VCY
700GW	Basic wind generator protection	3 ACIZ (83, 87)	IAX, IBX, ICX	3 ACIE (73, 77)	IAY, IBY, ICY

The SEL-700G offers an extensive variety of protection features, depending on the model and options selected. *Table 2* shows the protection features available in the different models.

Table 2 SEL-700G Protection Elements (Sheet 1 of 3)

Protection Elements		Basic Generator Protection	Basic With			Intertie Protection	Intertie and Generator Protection	Wind Generator Protection
			21C, 25, 64G, 78	21C, 78, 87	21C, 25, 64G, 78, 87			
		700G0	700G0+	700G1	700G1+	700GT	700GT+	700GW
87	Phase Differential			X	X			
87N	Ground Differential	X	X	X	X		X	
REF	Restricted Earth Fault	X	X	X	X		X	
64G	100% Stator Ground		X		X			
64F	Field Ground	X	X	X	X		X	X
40	Loss of Field	X	X	X	X		X	
49T	Thermal Overload	X	X	X	X		X	
49RTD	RTDs	X	X	X	X	X	X	X
46	Current Unbalance	X	X	X	X		X	
24	Volts/Hz	X	X	X	X		X	
78	Out of Step		X	X	X			
78VS	Vector Shift	X	X	X	X	X	X	
INAD	Inadvertent Energization	X	X	X	X		X	
21C	Compensator Distance		X	X	X			
51C	Voltage-Controlled TOC	X	X	X	X		X	
51V	Voltage-Restrained TOC	X	X	X	X		X	
51PX	Phase Time-Overcurrent							X

Table 2 SEL-700G Protection Elements (Sheet 2 of 3)

Protection Elements		Basic Generator Protection	Basic With			Intertie Protection	Intertie and Generator Protection	Wind Generator Protection
			21C, 25, 64G, 78	21C, 78, 87	21C, 25, 64G, 78, 87			
		700G0	700G0+	700G1	700G1+	700GT	700GT+	700GW
51PY	Phase Time-Overcurrent					X[a]	X[a]	X
51QX	Neg.-Seq. Time-Overcurrent							X
51QY	Neg.-Seq. Time-Overcurrent					X[a]	X[a]	X
51GX	Ground Time-Overcurrent	X[a]	X[a]	X[a]	X[a]		X[a]	X
51GY	Ground Time-Overcurrent					X[a]	X[a]	X
51N	Neutral Time-Overcurrent	X[a]	X[a]	X[a]	X[a]	X	X[a]	
50PX	Phase Overcurrent	X	X	X	X		X	X
50PY	Phase Overcurrent			X	X	X	X	X
67PY	Directional Phase Overcurrent					X	X	
50QX	Neg.-Seq. Overcurrent	X	X	X	X		X	X
50QY	Neg.-Seq. Overcurrent			X	X	X	X	X
67QY	Directional Neg.-Seq. Overcurrent					X	X	
50GX	Ground Overcurrent	X	X	X	X		X	X
67GX	Directional Ground Overcurrent	X	X	X	X		X	
50GY	Ground Overcurrent			X	X	X	X	X
67GY	Directional Ground Overcurrent					X	X	
50N	Neutral Overcurrent	X[b]	X[b]	X[b]	X[b]	X	X[b]	
67N	Directional Neutral Overcurrent	X	X	X	X		X	
27X	Undervoltage	X	X	X	X		X	
27Y	Undervoltage					X	X	
27S	Synchronism Undervoltage		X		X	X	X	
27I	Inverse-Time Undervoltage[c]	X	X	X	X	X	X	
59X	Overvoltage (P, Q, G)	X	X	X	X		X	
59Y	Overvoltage (P, Q, G)					X	X	
59S	Synchronism Overvoltage		X		X	X	X	
59I	Inverse-Time Overvoltage[d]	X	X	X	X	X	X	
32X	Directional Power	X	X	X	X		X	
32Y	Directional Power					X	X	
81X	Over/Underfrequency	X	X	X	X		X	
81Y	Over/Underfrequency					X	X	
81RX	Rate-of-Change of Frequency	X	X	X	X		X	
81RY	Rate-of-Change of Frequency					X	X	
BFX	Breaker Failure	X	X	X	X		X	X
BFY	Breaker Failure					X	X	X
60LOPX	Loss of Potential	X	X	X	X		X	
60LOPY	Loss of Potential					X	X	
25 GEN	Synchronism Check		X		X		X	
25 TIE	Synchronism Check					X	X	

Table 2 SEL-700G Protection Elements (Sheet 3 of 3)

Protection Elements		Basic Generator Protection	Basic With			Intertie Protection	Intertie and Generator Protection	Wind Generator Protection
			21C, 25, 64G, 78	21C, 78, 87	21C, 25, 64G, 78, 87			
		700G0	700G0+	700G1	700G1+	700GT	700GT+	700GW
	Autosynchronizer		X		X		X	
	Off-Frequency Accumulators	X	X	X	X		X	

[a] These inverse time-overcurrent elements have directional control.
[b] The 50N element uses the 67NnP and 67NnT Relay Word bits for the SEL-700G0, SEL-700G0+, SEL-700G1, SEL-700G1+, and SEL-700GT+ models.
[c] Two elements are available (select X- and/or Y-side phase, phase-to-phase, positive sequence, or synchronism voltage VS, depending on the part number).
[d] Two elements are available (select X- and/or Y-side phase, phase-to-phase, residual, positive sequence, negative sequence, neutral voltage VN, or synchronism voltage VS, depending on the part number).

Overcurrent Protection

The SEL-700G provides complete overcurrent protection with as many as two sets of three-phase CTs and one neutral CT input. Phase overcurrent protection is provided for both three-phase inputs. The following overcurrent elements are provided.

Instantaneous Overcurrent Elements

The following instantaneous overcurrent elements are provided in the SEL-700G as shown in *Table 2*. All instantaneous overcurrent elements provide torque control and definite-time delay settings.

- As many as six instantaneous phase overcurrent elements (50P) with peak detection algorithms to enhance element sensitivity during high-fault current conditions where severe CT saturation may occur.
- As many as four instantaneous negative-sequence overcurrent (50Q) elements.
- As many as four residual-ground instantaneous overcurrent (50G) elements. These elements use calculated residual (3I0) current levels.
- As many as two neutral instantaneous overcurrent elements (50N).

Directional Instantaneous Overcurrent Elements

The following directional overcurrent elements are available in the SEL-700G with directional control (see *Table 2*).

- As many as three directional phase overcurrent elements (67P).
- As many as two directional negative-sequence overcurrent elements (67Q).
- As many as four directional residual-ground overcurrent elements (67G).
- As many as two directional neutral-ground overcurrent elements (67N).

Time-Overcurrent Elements

The SEL-700G provides the time-overcurrent elements listed in *Table 2*. These time-overcurrent elements support the IEC and US (IEEE) time-overcurrent characteristics. Electromechanical disc reset capabilities are provided for all time-overcurrent elements.

- As many as two phase time-overcurrent (51P) elements are provided. These phase elements operate on the maximum of phase currents. One 51P element has directional control.
- As many as two negative-sequence time-overcurrent (51Q) elements are provided. These elements operate on the calculated negative-sequence current for each set of three-phase inputs. One 51Q element has directional control.
- As many as two residual time-overcurrent (51G) elements are provided. These elements use calculated residual (3I0) current levels. Both 51G elements have directional control.
- One neutral time-overcurrent (51N) element is provided with directional control.

Differential Protection (87)

When specified, the SEL-700G detects stator faults using a secure, sensitive current differential function. This function has a sensitive percentage-restrained differential element and an unrestrained element. The differential function provides the unique capability of power transformer and CT connection compensation. This allows you to conveniently include the unit step-up transformer in the generator differential zone using wye-connected CTs for both input sets. The relay allows you to choose harmonic blocking, harmonic restraint, or both, providing a reliable differential protection during transformer inrush conditions. Even-numbered harmonics (second and fourth) provide security during energization, while fifth harmonic blocking provides security for overexcitation conditions. Set second-, fourth-, and fifth-harmonic thresholds independently. The dual-slope percentage restraint characteristic improves element security for through-fault conditions. The high-security

mode provides additional security against CT saturation during external events including external transformer energization, external faults, etc.

Restricted Earth Fault (REF) Protection

Apply the REF protection feature for sensitive detection of internal ground faults on grounded wye-connected windings. The neutral current CT provides the operating current. Polarizing current is derived from the residual current calculated for the protected winding. A sensitive directional element determines whether the fault is internal or external. Zero-sequence current thresholds and selectable CT saturation logic supervise tripping.

Ground Differential Protection (87N)

SEL-700G relays with generator protection are equipped with a ground differential function that provides selective ground fault detection for solidly grounded and low-impedance grounded generators. This function helps protect generators on multimachine buses, because the element does not respond to ground faults on the parallel generators.

Generator Synchronism Check (25G)

You can specify the SEL-700G with a built-in generator synchronism-check function (25G). The synchronism-check function is extremely accurate and provides supervision for acceptable voltage window and maximum percentage difference, maximum and minimum allowable slip frequency, target closing angle, and breaker closing delay. The synchronism-check report gives complete information on the three latest paralleling operations, including the generator and system voltages and frequencies, slip frequency, and phase angle when the close was initiated. The relay also keeps a running average of the breaker close time.

Intertie Synchronism Check (25T)

The intertie model of the SEL-700G has the tie synchronism-check function (25T), which provides the closing window for the bus-tie breaker when connecting to the utility system.

Autosynchronizer and Synchroscope

Selected SEL-700G models have the built-in autosynchronizer function, which provides output contact interfaces for the generator field voltage regulator and the prime mover speed control governor. Frequency, voltage, and phase are automatically synchronized and the generator is connected to the power system with this function. The relay also provides generator autosynchronism reports to record the automatic synchronizing event. The generator synchronization process can be viewed on a PC-based synchroscope (see example in *Figure 4*) with QuickSet.

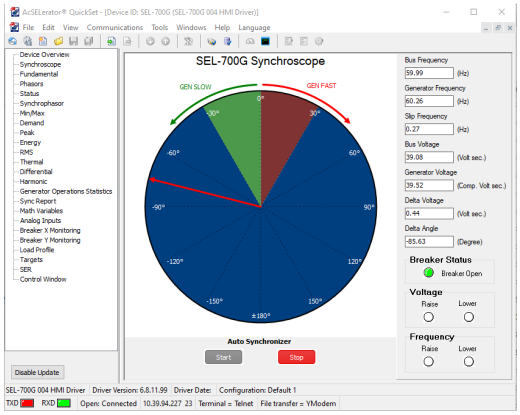

Figure 4 QuickSet Synchroscope

Relays equipped with the touchscreen display come with a built-in Synchroscope application in the Monitor folder, which displays a graphical representation of the phasor difference between the bus and the generator or tie. You can also use the Auto Synchronization application in the Control folder to initiate auto-synchronization of your generator and your system.

100 Percent Stator Ground Detection (64G)

The SEL-700G detects stator ground faults on high-impedance grounded generators using a conventional neutral-overvoltage element and a third-harmonic voltage differential detection scheme for 100 percent stator winding coverage. The neutral overvoltage element detects winding ground faults in approximately 85 percent of the winding. Faults closer to the generator neutral do not result in high neutral voltage but are detected using third harmonic neutral and terminal voltages. The combination of the two measuring methods provides ground fault protection for the full winding.

Use the SEL-2664S Stator Ground Protection Relay for 100 percent stator ground protection using a multisine signal injection method for a superior solution that is independent of third-harmonic voltage magnitude. This relay works with the generator in or out of service and during generator ramp up without any blind spots.

Field Ground Protection (64F)

The SEL-700G, with the SEL-2664 Field Ground Module, detects field ground faults by measuring field insulation-to-ground resistance using the switched dc voltage injection method. Two-level protection for alarm and trip functions is provided.

Directional Power Detection (32)

Sensitive directional power elements in the SEL-700G provide antimotoring and/or low forward power tripping. As many as eight elements (four each for the X side and Y side) for detecting real (Watts) or reactive (VARS) directional power flows, having independent time-delays and sensitivities are provided. Directly trip the generator under loss-of-prime mover conditions to prevent prime movers from motoring, or use low forward power indication as a tripping interlock when an orderly shutdown is required.

Over-Excitation Protection (24)

The SEL-700G provides one definite-time for alarm and one composite inverse-time volts/hertz element. The composite inverse-time characteristic may be enabled with a two-step definite-time characteristic, a definite/inverse-time characteristic, or a simple inverse-time characteristic. A custom curve option is also available.

Loss-of-Field Protection (40)

Two offset positive-sequence mho elements detect loss-of-field conditions. Settable time-delays help reject power swings that pass through the machine impedance characteristic. By using the included directional supervision, one of the mho elements can be set to coordinate with the generator minimum excitation limiter and its steady-state stability limit.

Out-of-Step Protection (78)

SEL-700G relays use a single or a double-blinder scheme, depending on user selection, to detect an out-of-step condition. In addition to the blinders, the scheme uses a mho circle that restricts the coverage of the out-of-step function to the desired extent. Furthermore, both schemes contain current supervision and torque control to supervise the operation of the out-of-step element.

Negative-Sequence Overcurrent Protection (46)

Negative-sequence current heats the rotor at a higher rate than positive-sequence or ground current. The negative-sequence definite-time element provides alarm for early stages of an unbalanced condition. The inverse time-overcurrent element provides tripping for sustained unbalance conditions to prevent machine damage. The inverse-time negative-sequence element provides industry standard $(I_2)^2 \bullet t$ protection curves.

System Backup Protection (21C, 51V, 51C)

The SEL-700G offers you the choice of three methods for performing system backup protection. Compensator distance elements (21C), a voltage-restrained phase time-overcurrent element (51V), and a voltage-controlled phase time-overcurrent (51C) element are all available; you simply enable the element you wish to use.

Over- and Undervoltage Protection (27, 59)

Phase, phase-to-phase, and positive-sequence undervoltage (27), overvoltage (59), residual overvoltage (59G) and negative-sequence overvoltage (59Q) elements help you create protection and control schemes, such as undervoltage load shedding, or standby generation start/stop commands.

- Phase and phase-to-phase undervoltage elements operate with the minimum of the measured voltage magnitudes; these elements operate when any single measurement falls below the set thresholds.
- Phase and phase-to-phase overvoltage elements operate with the maximum of the measured voltage magnitudes.
- The positive-sequence undervoltage elements operate when the calculated positive-sequence voltage V1 drops below the set thresholds.
- The positive-sequence overvoltage elements operate when the calculated positive-sequence voltage V1 exceeds the set thresholds.
- The negative-sequence overvoltage elements operate when the calculated negative-sequence voltage V2 exceeds set thresholds.
- The residual-ground voltage element operates when the zero-sequence voltage 3V0 exceeds the set point.
- Inverse-time overvoltage (59I) and inverse-time undervoltage (27I) elements that operate on the measure phase-to-neutral voltages, phase-to-phase voltages, or VS channel voltage, depending on the relay part number.

All voltage elements provide definite-time delay settings.

Loss-of-Potential Logic (60LOP)

Relay functions that use phase voltages or symmetrical component voltages rely on valid inputs to make the correct decisions. The LOP logic detects open voltage transformer fuses or other conditions that cause a loss of relay secondary voltage input. The SEL-700G with voltage inputs, includes loss-of-potential logic that detects one, two, or three potentially blown fuses. This patented logic is unique and is universally applicable. It also offers a SELOGIC setting to block the LOP logic under user-defined conditions. The LOP feature allows for the blocking of protection elements to add security during fuse failure.

Breaker Failure Protection (BF)

The SEL-700G offers breaker failure protection for up to two three-pole breakers. Use the breaker failure detection to issue re-trip commands to the failed breaker, or to trip adjacent breakers using the relay's contact output logic or communications-based tripping schemes.

Inadvertent Energization Detection

Occasionally, the unit breaker for an out-of-service generator is closed inadvertently. The SEL-700G detects this condition using voltage, current, and other supervisory conditions you select through an SELOGIC control equation.

Frequency Protection (81)

Six levels of over- or underfrequency elements detect abnormal frequency operating conditions. Use the independently time-delayed output of these elements to trip or alarm. Phase undervoltage supervision prevents undesired frequency element operation during start-up, shutdown, and faults, and while the field is de-energized. SEL-700G frequency elements have high accuracy (less than 0.01 Hz).

Rate-of-Change-of-Frequency Protection (81R)

Four independent rate-of-change-of-frequency elements are provided with individual time delays for use when frequency changes occur, for example, when there is a sudden imbalance between generation and load. They call for control action or switching action such as network decoupling or load shedding. Each element includes logic to detect either increasing or decreasing frequency and above or below nominal frequency.

Vector Shift Protection (78VS)

When distributed generators (DG) are connected in the utility network, the vector shift element (78VS) is used to detect islanding conditions and trip the DG. Failure to trip islanded generators can lead to problems such as personnel safety, out-of-synchronization reclosing, and degradation of power quality. Based on the change in the angle of the voltage waveform, the islanding condition can be detected by the vector shift function. Use the vector shift element with the 81RF element as a backup for fast and secure islanding detection. The vector shift element operates within three cycles, which is fast enough to prevent reclosing out-of-synchronism with the network feeders to avoid generator damage.

Off-Frequency Accumulators

The SEL-700G tracks the total time-of-operation in up to six off-nominal frequency bands. If the off-nominal time of operation exceeds one of the independent time set points, the relay can trip or alarm.

Thermal Overload Protection (49T)

The SEL-700G thermal element provides generator overload protection based on the thermal model described in IEC standard 60255-8. The model can be biased by ambient temperature if the RTD option is used.

The relay operates a thermal model with a trip value defined by the relay settings and a present heat estimate that varies with time and changing generator current.

RTD Thermal Protection

When the SEL-700G is equipped with either an optional 10 RTD input expansion card or an external SEL-2600 RTD Module with up to 12 RTD inputs, as many as 12 thermal elements in the relay can be programmed for two levels of thermal protection per element. Each RTD input provides an alarm and trip thermal pickup setting in degrees C, provides open and shorted RTD detection, and is compatible with the following three-wire RTD types:

- PT100 (100 Ω platinum)
- NI100 (100 Ω nickel)
- NI120 (120 Ω nickel)
- CU10 (10 Ω copper)

Additionally, the winding RTDs and the ambient temperature RTD can be configured and used to bias the generator thermal model and thermal protection.

Operator Controls

Operator controls eliminate traditional panel control switches. Eight conveniently sized operator controls are located on the relay front panel (see *Figure 5*). The SER can be set to track operator controls. Change operator control functions using SELOGIC control equations.

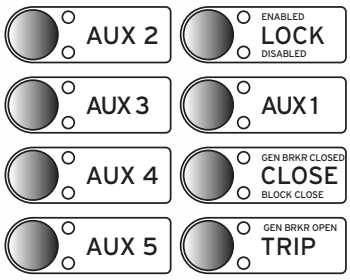

NOTE: All text can be changed with the configurable labels kit.

Figure 5 Operator Controls (Shown for the SEL-700GO, SEL-700G1 Models)

The following operator control descriptions are for factory-set logic for the model shown.

LOCK: The **LOCK** operator control blocks selected functions. Press it for at least three seconds to engage or disengage the lock function. While locked in position, the following operator controls cannot change state if pressed: TRIP and CLOSE.

AUX: The **AUX** operator control and LEDs are user programmable.

CLOSE and TRIP: Use the **CLOSE** and **TRIP** operator controls to close and open the connected circuit breaker. They can be programmed with intentional time delays to support operational requirements for breaker-mounted relays. This allows the operator to press the **CLOSE** or **TRIP** pushbutton, then move to an alternate location before the breaker command is executed.

In the SEL-700G with the touchscreen display, you can also use the front-panel operator control pushbuttons to jump to a specific screen while also using them for LOCK/CLOSE/TRIP operations, etc. You can program the selectable operator pushbutton screen settings under the Touchscreen settings category in QuickSet and map the button to a specific screen.

Built-In Web Server

Every Ethernet-equipped SEL-700G includes a built-in web server. Use any standard web browser to interface with the relay and perform the following actions:

- Log in with password protection.
- Safely read the relay settings.
- Verify the relay self-test status and view the relay configuration.
- Inspect meter reports.
- Download SER and event reports.
- Upload new firmware (firmware upgrade).

Figure 6 shows the fundamental metering screen that can be accessed by clicking **Meter > Fundamental**. Use the Meter menu to view all the available relay metering statistics.

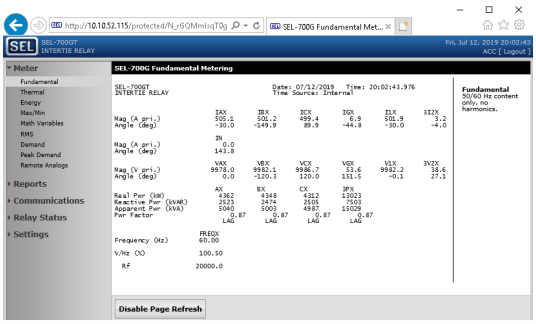

Figure 6 Fundamental Meter Report Webpage

Figure 7 shows the Group 1 settings webpage. You can view the settings of each relay settings class by selecting **Settings** and the respective relay settings class.

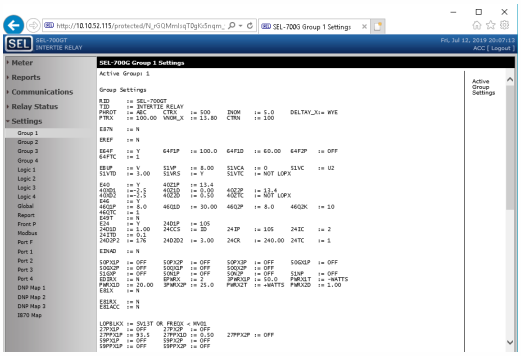

Figure 7 Group 1 Settings Webpage

You can upgrade the relay firmware through the relay web server by clicking **System > File Management** and selecting the firmware upgrade file. *Figure 8* shows the firmware upgrade webpage.

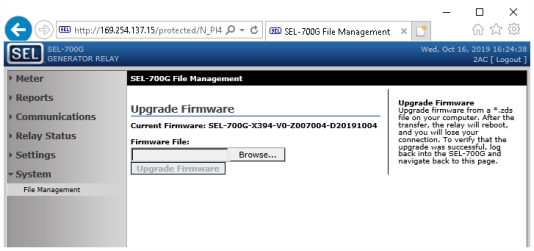

Figure 8 Upgrade the Relay Firmware From the File Management Webpage

Relay and Logic Settings Software

QuickSet Software simplifies settings and provides analysis support for the SEL-700G. With QuickSet you have several ways to create and manage relay settings:

- Develop settings off-line with an intelligent settings editor that only allows valid settings.
- Create SELOGIC control equations with a drag-and-drop text editor.
- Configure proper settings using online help.
- Organize settings with the relay database manager
- Load and retrieve settings using a simple PC communications link.

With QuickSet you can verify settings and analyze events; and analyze power system events with the integrated waveform and harmonic analysis tools.

The following features of QuickSet can monitor, commission, and test the SEL-700G:

- The PC interface remotely retrieves power system data.
- The HMI monitors meter data, Relay Word bits, and output contacts status during testing. The control window allows resetting of metering quantities, and other control functions.
- The synchroscope screen provides a visual display of the autosynchronizer function.
- Bay control allows you to design new bay screens and edit existing bay screens by launching ACSELERATOR Bay Screen Builder SEL-5036 Software for the SEL-700G relays with the touchscreen display.

ACSELERATOR Bay Screen Builder SEL-5036 Software

The SEL-700G with the touchscreen display layout option provides you with the ability to design bay configuration screens to meet your system needs. You can display the bay configuration as a single-line diagram (SLD) on the touchscreen. You can use ANSI and IEC symbols, along with analog and digital labels, for the SLD to indicate the status and control of the breaker and two- or three-position disconnects, bus voltages, and power flow through the breaker. In addition to SLDs, you can design the screens to show the status of various relay elements via Relay Word bits or to show analog quantities for commissioning or day-to-day operations. You can design these screens with the help of Bay Screen Builder in conjunction with QuickSet. Bay Screen Builder provides an intuitive and powerful interface to design bay screens to meet your application needs.

Schweitzer Part # 0700G11B1BOX76850300

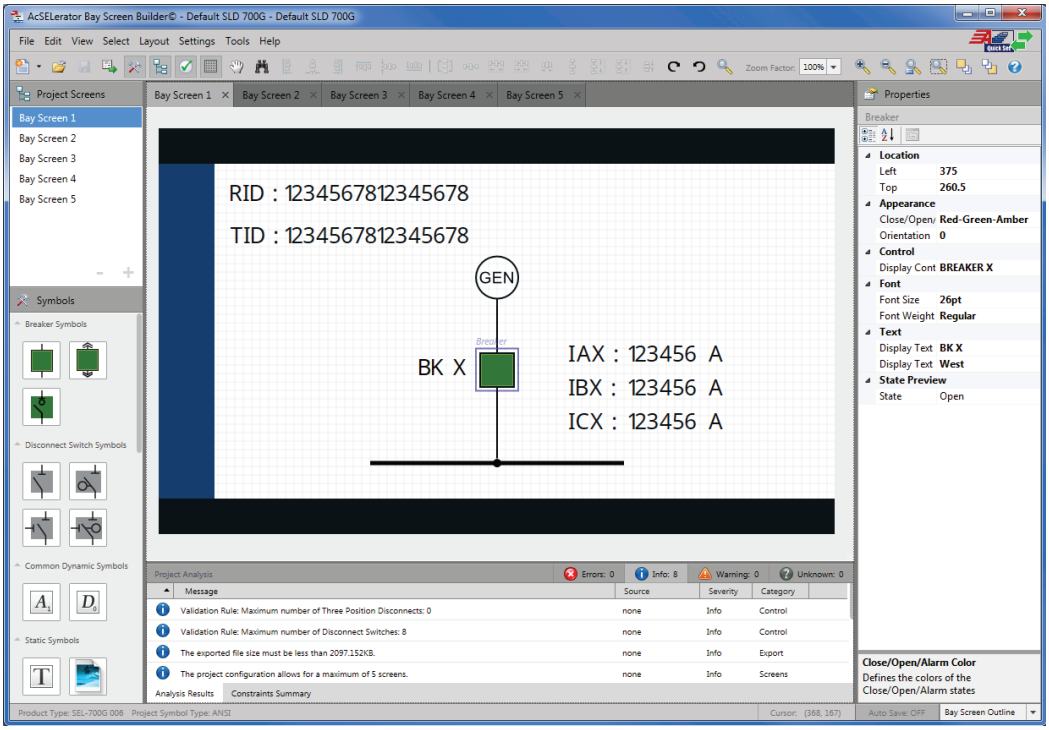

Figure 9 Bay Screen Builder

Metering and Monitoring

The SEL-700G, depending on the model selected, provides extensive metering capabilities. See *Specifications on page 36* for metering and power measurement accuracies. As shown in *Table 3*, metered quantities include voltages and currents; sequence voltages and currents; power, frequency, and energy; and maximum/minimum logging of selected quantities. The relay reports all metered quantities in primary quantities (current in A primary and voltage in V primary).

Table 3 SEL-700G Metered Values

Types of Metering			
Instantaneous	Differential	Max/Min	Analog Inputs
Remote Analogs	Math Variables	Synchrophasors	Thermal
Demand and Peak Demand	Energy	RMS	Harmonics

Quantities	Description
Currents: IA*n*, IB*n*, IC*n*, IG*n*, IN	Phase currents, calculated residual currents (IG = 3I0 = IA + IB + IC) and neutral current, for *n* = X and Y
Voltages: VA*n*, VB*n*, VC*n*, VN	Wye-connected voltage inputs for *n* = X and Y
Voltages: VAB*n*, VBC*n*, VCA*n*	Delta-connected voltage inputs for *n* = X and Y
Voltage VS	Synchronism-check voltage input
Power kWA*n*, B*n*, C*n*, 3P*n* kVARA*n*, B*n*, C*n*, 3P*n* kVAA*n*, B*n*, C*n*, 3P*n*	Single and three-phase kilowatts, kilovars, and kilovolt-amps for *n* = X and Y
Energy MWhA*n*, B*n*, C*n*, 3P*n* MVARhA*n*, B*n*, C*n*, 3P*n* MVAhA*n*, B*n*, C*n*, 3P*n*	Single and three-phase real, reactive and apparent energy for *n* = X and Y
Power Factor PFA*n*, B*n*, C*n*, 3P*n*	Single and three-phase power factor for *n* = X and Y
Sequence I1*n*, 3I2*n*, 3I0*n*, V1*n*, 3V2*n*, 3V0*n*	Positive, negative and zero-sequence currents and voltages for *n* = X and Y
Frequency FREQ*n*, FREQS (Hz)	Instantaneous power system frequency for *n* = X and Y and for synchronism-check voltage input VS
V/Hz	Calculated volts/hertz in percent, using highest measured voltage and measured frequency
VPX3, VN3	Phase and neutral third harmonic voltage for stator ground protection
Gen TCU %	Generator thermal capacity used (%)
Rf kOhm	Field winding insulation resistance to ground (kOhm)
AX*x*01–AX*x*04	Analog inputs
MV01–MV32	Math variables
RA001–RA128	Remote analogs
RTD*n* (*n* = 1 to 12)	RTD temperature measurement (degrees C)

Load Profile

The SEL-700G features a programmable Load Profile (LDP) recorder that records as many as 17 metering quantities into nonvolatile memory at fixed time intervals. The LDP saves several days to several weeks of the most recent data depending on the LDP settings (9800 entries total).

Synchronized Phasor Measurement

Combine the SEL-700G with an SEL IRIG-B time source to measure the system angle in real time with a timing accuracy of ±10 µs. Measure instantaneous voltage and current phase angles in real time to improve system operation with synchrophasor information. Replace state measurement, study validation, or track

Schweitzer Part # 0700G11B1BOX76850300

system stability. Use SEL-5077 SYNCHROWAVE® Server Software or SEL-5078-2 SYNCHROWAVE® Console Software to view system angle at multiple locations for precise system analysis and system-state measurement (see *Figure 10*).

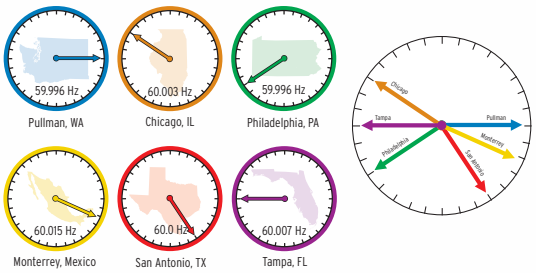

Figure 10 View of System Angle at Multiple Locations

Send synchrophasor data using IEEE C37.118-2005 protocol to SEL synchrophasor applications. These include the SEL-3378 Synchrophasor Vector Processor (SVP), SEL-3530 Real-Time Automation Controller (RTAC), and the SEL-5078-2 SYNCHROWAVE Central Visualization and Analysis Software suite.

The SEL-3373 Station Phasor Data Concentrator (PDC) and the SEL-5073 SYNCHROWAVE PDC software correlate data from multiple SEL-700G relays and concentrate the result into a single output data stream. These products also provide synchrophasor data archiving capability. The SEL-3378 SVP enables control applications based on synchrophasors. Directly measure the oscillation modes of your power system and then act on the result. Use wide-area phase angle slip and acceleration measurements to properly control islanding of distributed generation. With the SVP, you can customize a synchrophasor control application according to the unique requirements of your power system.

The data rate of SEL-700G synchrophasors is selectable with a range of 1–60 messages per second. This flexibility is important for efficient use of communication capacity.

The SEL-700G phasor measurement accuracy meets the highest IEEE C37.118-2005 Level 1 requirement of 1 percent total vector error (TVE). This means you can use any SEL-700G model in an application that otherwise would require purchasing a separate dedicated phasor measurement unit (PMU).

Use the SEL-700G with SEL communications processors, or the SEL-3530 RTAC, to change nonlinear state estimation into linear state estimation. If all necessary lines include synchrophasor measurements then state estimation is no longer necessary. The system state is directly measured.

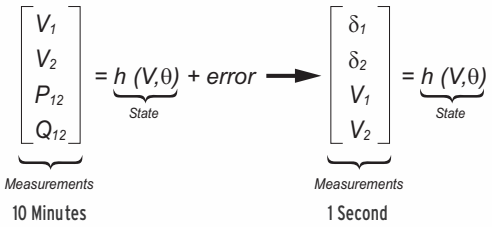

Figure 11 Synchrophasor Measurements Turn State Estimation into State Measurement

Generator Operating Statistics Monitoring

The SEL-700G relay, having generator elements, tracks the performance and utilization of the protected generator by tracking the following generator operating statistics.

- Total generator running hours
- Total generator stopped hours
- Generator full load hours
- Percent of time running
- Accumulated generator $I_2^2 \cdot t$
- Average real and reactive power outputs
- Average power factor

Improve Situational Awareness

Provide improved information to system operators. Advanced synchrophasor-based tools produce a real-time view of system conditions. Use system trends, alarm points, and preprogrammed responses to help operators prevent a cascading system collapse and maximize system stability. Awareness of system trends provides operators with an understanding of future values based on measured data.

- Increase system loading while maintaining adequate stability margins.
- Improve operator response to system contingencies such as overload conditions, transmission outages, or generator shutdown.
- Advance system knowledge with correlated event reporting and real-time system visualization.
- Validate planning studies to improve system load balance and station optimization.

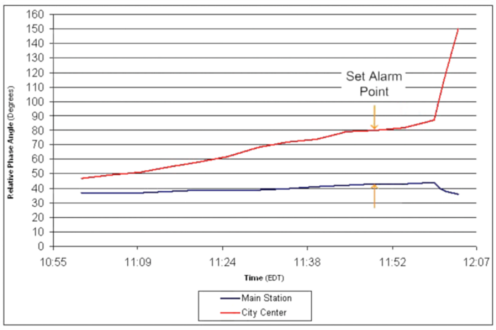

Figure 12 Visualization of Phase Angle Measurements Across a Power System

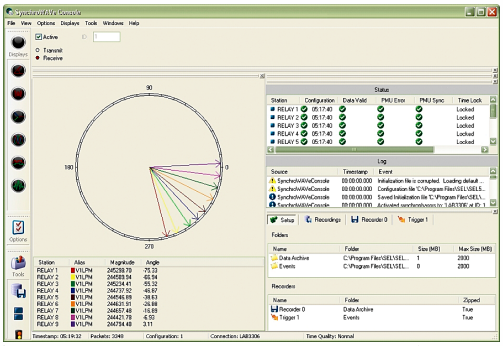

Figure 13 SEL-5078-2 SYNCHROWAVE Console Real-Time, Wide-Area Visualization Tool

Event Reporting and SER

Event reports and the SER simplify post-fault analysis and improve understanding of simple and complex protective scheme operations. In response to a user-selected trigger, the voltage, current, frequency, and element status information contained in each event report confirms the relay scheme and system performance for every fault. Decide how much detail is necessary when you request an event report (e.g., 1/4-cycle or 1/32-cycle resolution, filtered or raw analog data, respectively).

The relay stores as many as 6 of the most recent 180-cycle event reports, 18 of the most recent 64-cycle event reports, or 74 of the most recent 15-cycle event reports in nonvolatile memory. The relay always appends relay settings at the time of the event to the bottom of each event report.

The following analog data formats are available:

- 1/4-cycle or 1/32-cycle resolution, filtered or unfiltered analog, ASCII or Compressed ASCII reports
- 1/32-cycle resolution COMTRADE reports

The relay SER feature stores the latest 1024 entries. Use this feature to gain a broad perspective at a glance. An SER entry helps to monitor input/output change-of-state occurrences and element pickup/dropout.

Synchronized Measurements

The IRIG-B time-code input synchronizes the SEL-700G time to within ±5 ms of the time-source input. A convenient source for this time code is an SEL-2401 Satellite-Synchronized Clock, the SEL-3530 Real Time Automation Controller (RTAC), or the SEL-2032, SEL-2030, or SEL-2020 Communications Processor (via Serial Port 3 on the SEL-700G).

Generator Autosynchronism Report

The SEL-700G with the autosynchronism function generates a generator autosynchronism report with all the relevant analog and digital signals for a quick analysis of the event. The sample rate can be selected between 0.25, 1, and 5 cycles. The report captures 4800 time-stamped data points.

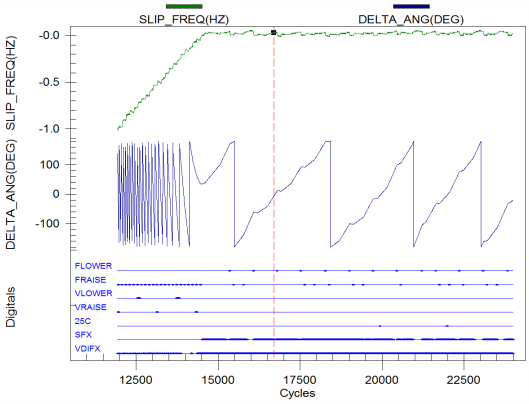

Figure 14 Graphical Display of Generator Synchronizer Report

IEC 61850 Test Mode

Test Mode allows you to test an in-service relay without accidentally operating control output contacts. Test Mode includes five different modes:

On: In On mode, the relay operates as normal; it reports IEC 61850 Mode/Behavior status as On and processes all inputs and outputs as normal. If the quality of the subscribed GOOSE messages satisfies the GOOSE processing, the relay processes the received GOOSE messages as valid.

Blocked: This mode is similar to On mode, except that the device does not trip any physical contact output.

Test: In Test mode, the relay processes valid incoming test signals and normal messages and operates physical contact outputs, if the outputs are triggered.

Test/Blocked: This is similar to Test mode, except that the device does not trip any physical contact outputs.

Off: The device does not process any incoming data or control commands (except commands to change the mode). All protection logic is disabled and all data quality is marked as invalid.

Simulation: In this mode, the relay continues to process normal GOOSE messages until a simulated GOOSE message is received for a subscription. Once a simulated GOOSE message is received, only simulated GOOSE messages are processed for that subscription. The simulated mode only terminates when LPHDSIM is returned to FALSE. When the relay is not in simulation mode, only normal GOOSE messages are processed for all subscriptions.

Touchscreen Display

You can order the SEL-700G Generator Protection Relay with an optional touchscreen display (5-inch, color, 800 x 480 pixels). The touchscreen display makes relay data metering, monitoring, and control quick and efficient. The touchscreen display option in the SEL-700G features a straightforward application-driven control structure and includes intuitive and graphical screen designs.

The touchscreen display allows you to:

- View and control bay screens
- Access metering and monitoring data
- Inspect targets
- View event history, summary data, and SER information
- View relay status and configuration
- Control relay operations
- View and edit settings
- Enable the rotating display
- Program control pushbuttons to jump to a specific screen
- Visualize and synchronize your generator to the system with built-in Synchroscope/Auto Synchronizer applications

You can navigate the touchscreen by selecting the folders and applications. The folders and applications of the Home screen are shown in *Figure 15*. Folders and applications are labeled according to functionality. Additional folder and application screens for the SEL-700G touchscreen display option can be seen in *Figure 16* through *Figure 25*.

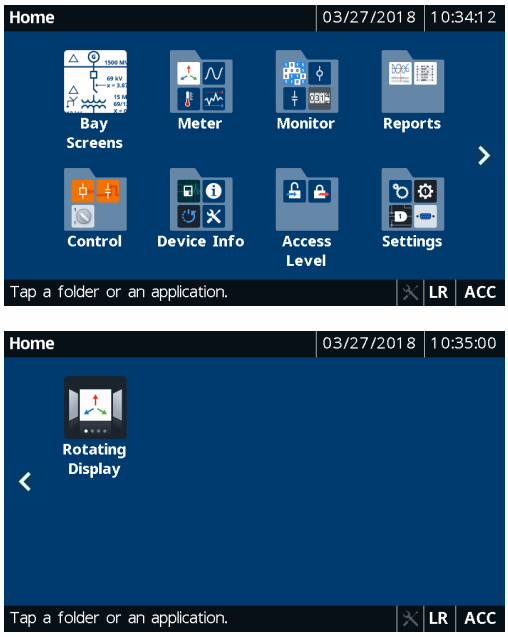

Figure 15 Home (Default FPHOME Screen)

Bay Screens Application

The SEL-700G with the touchscreen display option provides you with the ability to design bay configuration screens to meet your system needs. The bay configuration can be displayed as an SLD on the touchscreen. You can create as many as five bay screens with up to two controllable breakers, eight controllable two-position disconnects, and two controllable three-position disconnects. ANSI and IEC symbols, along with analog and digital labels, are available for you to create detailed SLDs of the bay to indicate the status and control of the breaker and disconnects, bus voltages, and power flow through the breaker. *Figure 16* shows the default SLD for the touchscreen display option.

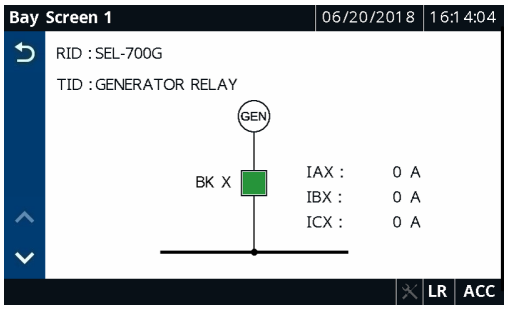

Figure 16 Default Bay Screen

Meter Folder Applications

The applications in the Meter folder are part-number dependent. Only those metering applications specific to your part number appear in the Meter folder. Select an application in the **Meter** folder to display the report for that particular application. Select the **Phasor** application to view the current and voltage phasors (see *Figure 17*).

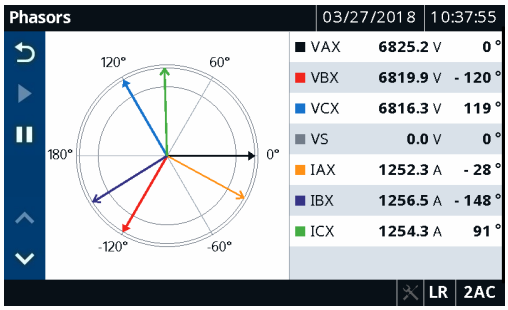

Figure 17 Meter Phasors

Select the **Energy** application to view the energy metering quantities (see *Figure 18*). A reset feature is provided for the Energy, Max/Min, Thermal, Demand, and Peak Demand applications. Press the **Reset** button 0.00 (see *Figure 18*) to navigate to the reset confirmation screen. Once you confirm the reset, the data are reset to zero.

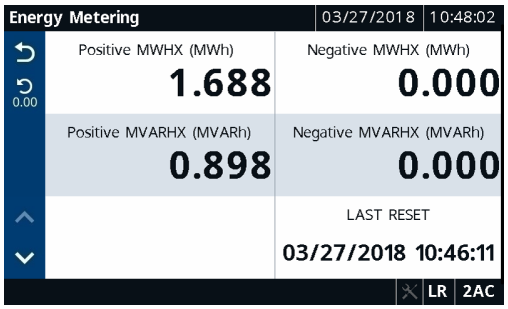

Figure 18 Meter Energy

Reports Folder Applications

Select the **Reports** folder to navigate to the screen where you can access the Events and SER applications. Use these applications to view events and SERs. To view the event summary (see *Figure 19*) of a particular event record, you can select the event record on the Event History screen. You can also trigger an event report from the Event History screen.

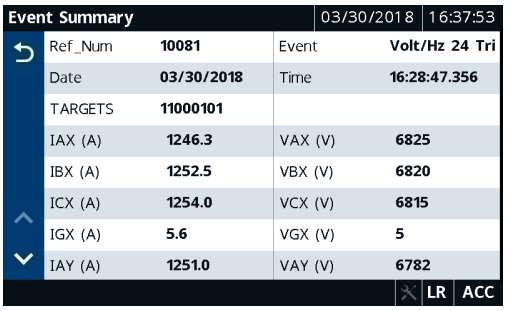

Figure 19 Event Summary

Select the **Sequential Events Recorder** application to view a history of the SER reports (see *Figure 20*).

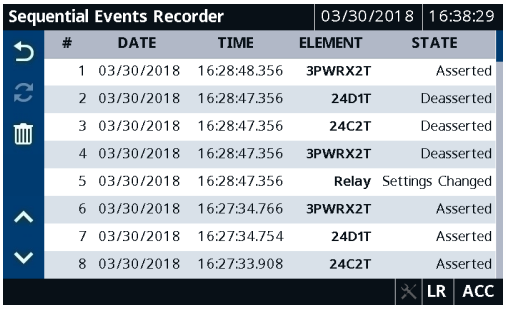

Figure 20 Sequential Events Recorder

Select the **Trash** button, shown in *Figure 19*, on the Event History and Sequential Events Recorder screens and confirm the delete action to remove the records from the relay.

Control Folder Applications

Select the **Control** folder to navigate to the screen where you can access the Breaker Control, Disconnect Control, Output Pulsing, Local Bits, Auto Synchronizer, and Reset TCU applications. Use the applications to perform breaker control operations, pulse output contacts (*Figure 21*), control the local bits (*Figure 22*), and reset TCU for the thermal overload element.

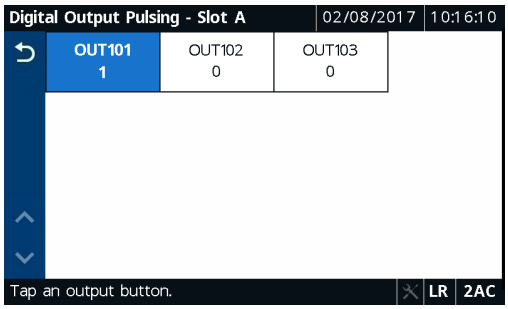

Figure 21 Digital Output Pulsing-Slot A

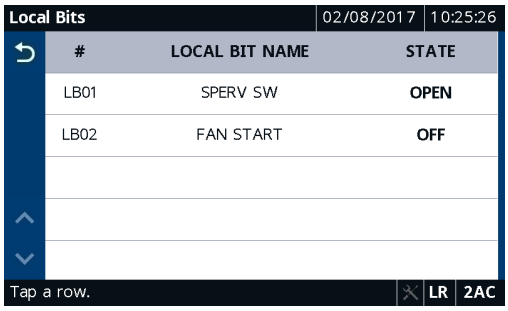

Figure 22 Local Bits

Use the Auto Synchronizer application to initiate auto-synchronization of your generator to the system. Throughout the process, you can see the phasor difference between the bus and the generator via the Synchroscope.

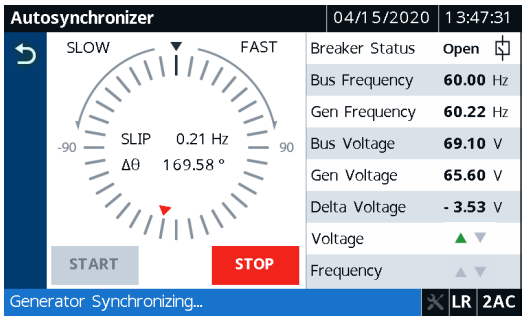

Figure 23 Auto Synchronizer

Device Info Folder Applications

Select the **Device Info** folder to navigate to the screen where you can access specific device information applications (Status, Configuration, and Trip & Diag. Messages) and the Reboot application.

Select the **Status** application to view the relay status, firmware version, part number, etc. (see *Figure 24*).

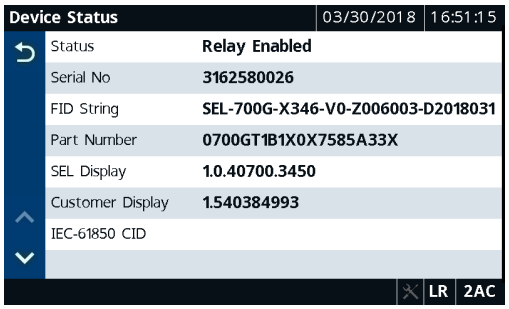

Figure 24 Status

To view the trip and diagnostic messages, select the **Trip & Diag. Messages** application (see *Figure 25*). When a diagnostic failure, trip, or warning occurs, the relay displays the diagnostic message on the screen until it is either overriden by the restart of the rotating display, or the inactivity timer expires.

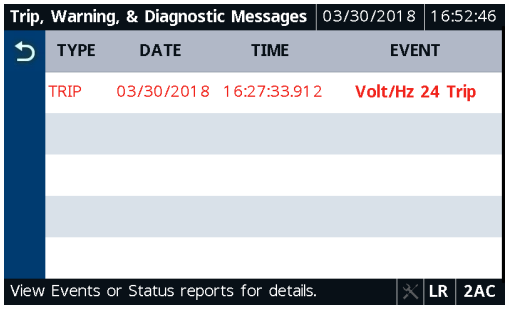

Figure 25 Trip and Diagnostics

Automation

Flexible Control Logic and Integration

The SEL-700G can be ordered with as many as four independently operated serial ports:

- EIA-232 port on the front panel
- EIA-232 or EIA-485 port on the Slot B in the rear
- EIA-232 fiber-optic port on Slot B card in the rear
- EIA-232 or EIA-485 port on the optional communications card in Slot C in the rear

Optionally, the relay supports single or dual, copper or fiber-optic Ethernet ports.

The relay does not require special communications software. You can use any system that emulates a standard terminal system. Establish communication by connecting: computers, modems, protocol converters, printers, an SEL Real-Time Automation Controller (RTAC), SEL communications processor, SEL computing platform, SCADA serial port, and RTUs for local or remote communication. Refer to *Table 4* for a list of communications protocols available in the SEL-700G.

Table 4 Communications Protocols (Sheet 1 of 2)

Type	Description
Simple ASCII	Plain language commands for human and simple machine communications. Use for metering, setting, self-test status, event reporting, and other functions.
Compressed ASCII	Comma-delimited ASCII data reports. Allows external devices to obtain relay data in an appropriate format for direct import into spreadsheets and database programs. Data are checksum protected.
Extended Fast Meter and Fast Operate	Binary protocol for machine-to-machine communications. Quickly updates SEL communications processors, RTUs, and other substation devices with metering information, relay element, I/O status, time-tags, open and close commands, and summary event reports. Data are checksum protected. Binary and ASCII protocols operate simultaneously over the same communications lines so control operator metering information is not lost while a technician is transferring an event report. Direct communications with the SEL-2600 RTD Module are possible using the unsolicited Fast Meter protocol to read incoming temperature data from the SEL-2600.
Fast SER Protocol	Provides SER events to an automated data collection system.
Fast Message Protocol	Use this protocol to write remote analog data from other SEL relays or communications processors via unsolicited writes.
DNP3	Serial or Ethernet-based DNP3 protocols. Provides default and mappable DNP3 objects that include access to metering data, protection elements, Relay Word bits, contact I/O, targets, SER, relay summary event reports, and setting group selection.
Modbus	Serial- or Ethernet-based Modbus with point remapping. Includes access to metering data, protection elements, contact I/O, targets, SER, relay summary event reports, and setting groups.
IEC 61850 Edition 2	Ethernet-based international standard for interoperability between intelligent devices in a substation. Operates remote bits and I/O. Monitors Relay Word bits and analog quantities.
Synchrophasors	IEEE C37.118-compliant synchrophasors for system state, response, and control capabilities.
Event Messenger	The use of SEL-3010 Event Messenger allows you to receive alerts directly on your cell phone. Alerts can be triggered through relay events and can include quantities measured by the relay.
DeviceNet	Allows for connection to a DeviceNet network for access to metering data, protection elements, contact I/O, targets, and setting groups. (The DeviceNet option has been discontinued and is no longer available to order as of September 25, 2017.)
SNTP	Ethernet-based protocol that provides time synchronization of the relay.
IEEE 1588-2008 firmware-based PTP	Ethernet-based protocol that provides time synchronization of the relay.
PRP	Provides seamless recovery from any single Ethernet network failure in a dual redundant Ethernet network, in accordance with IEC 62439-3.
IEC 60870-5-103	Serial communications protocol–international standard for interoperability between intelligent devices in a substation.

Table 4 Communications Protocols (Sheet 2 of 2)

Type	Description
EtherNet/IP	Ethernet-based protocol that includes access to metering data, protection elements, targets, and contact I/O.
RSTP	Provides faster recovery in response to changes and failures in switched mode dual redundant Ethernet networks in accordance with IEEE 802.1Q-2014.

Apply an SEL communications processor as the hub of a star network, with point-to-point fiber or copper connection between the hub and the SEL-700G (*Figure 26*).

The communications processor supports external communications links including the public switched telephone network for engineering access to dial-out alerts and private line connections of the SCADA system.

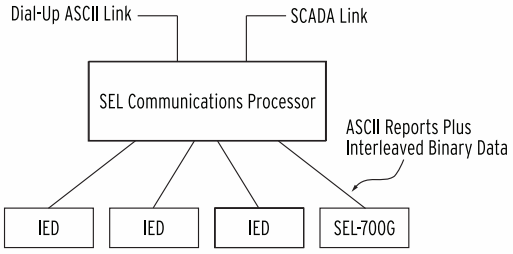

Figure 26 Example Communications System

SEL manufactures a variety of standard cables for connecting this and other relays to a variety of external devices. Consult your SEL representative for more information on cable availability.SEL-700G control logic improves integration in the following ways:

- **Replaces traditional panel control switches**. Eliminate traditional panel control switches with 32 local bits. Set, clear, or pulse local bits with the front-panel pushbuttons and display. Program the local bits into your control scheme with SELOGIC control equations. Use the local bits to perform functions such as a trip test or a breaker trip/close.
- **Eliminates RTU-to-relay wiring**. Eliminate RTU-to-relay wiring with 32 remote bits. Set, clear, or pulse remote bits using serial port commands. Program the remote bits into your control scheme with SELOGIC control equations. Use remote bits for SCADA-type control operations such as trip, close, and settings group selection.
- **Replaces traditional latching relays**. Replace up to 32 traditional latching relays for such functions as "remote control enable" with latch bits. Program latch set and latch reset conditions with SELOGIC control equations. Set or reset the nonvolatile latch bits using optoisolated inputs, remote bits, local bits, or any programmable logic condition. The latch bits retain their state when the relay loses power.
- **Replaces traditional indicating panel lights**. Replace traditional indicating panel lights with 32 programmable displays. Define custom messages (e.g., `Breaker Open`, `Breaker Closed`) to report power system or relay conditions on the front-panel display. Use Advanced SELOGIC control equations to control which messages the relay displays.
- **Eliminates external timers**. Eliminate external timers for custom protection or control schemes with 32 general purpose SELOGIC control equation timers. Each timer has independent time-delay pickup and dropout settings. Program each timer input with any desired element (e.g., time qualify a current element). Assign the timer output to trip logic, transfer trip communications, or other control scheme logic.
- **Eliminates settings changes.** Selectable setting groups make the SEL-700G ideal for applications requiring frequent setting changes and for adapting the protection to changing system conditions.

The relay stores three setting groups. Select the active setting group by optoisolated input, command, or other programmable conditions. Use these setting groups to cover a wide range of protection and control contingencies.

Switching setting groups switches logic and relay element settings. Program groups for different operating conditions, such as station maintenance, seasonal operations, emergency contingencies, loading, source changes, and downstream relay setting changes.

Fast SER Protocol

SEL Fast SER Protocol provides SER events to an automated data collection system. SEL Fast SER Protocol is available on any rear serial port. Devices with embedded processing capability can use these messages to enable and accept unsolicited binary SER messages from SEL-700G relays.

SEL relays and communications processors have two separate data streams that share the same serial port. The normal serial interface consists of ASCII character commands and reports that are intelligible to people using a terminal or terminal emulation package. The

binary data streams can interrupt the ASCII data stream to obtain information, and then allow the ASCII data stream to continue. This mechanism allows a single communications channel to be used for ASCII communications (e.g., transmission of a long event report) interleaved with short bursts of binary data to support fast acquisition of metering or SER data.

Fast Message Protocol

SEL Fast Message Protocol is a method to input or modify remote analogs in the SEL-700G. These remote analogs can then be used in SEL Math or SELOGIC control equations. Remote analogs can also be modified via Modbus, DNP3, and IEC 61850.

Ethernet Network Architectures

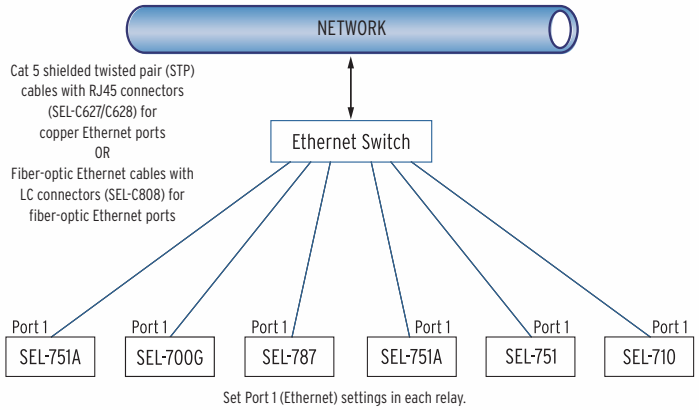

Figure 27 Simple Ethernet Network Configuration

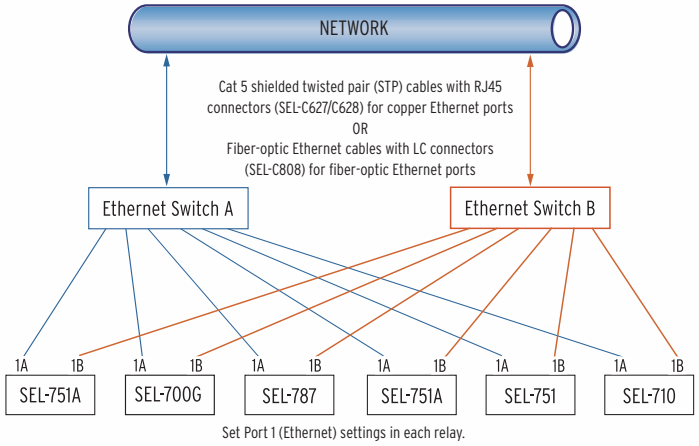

Figure 28 Ethernet Network Configuration With Dual Redundant Connections (Failover Mode)

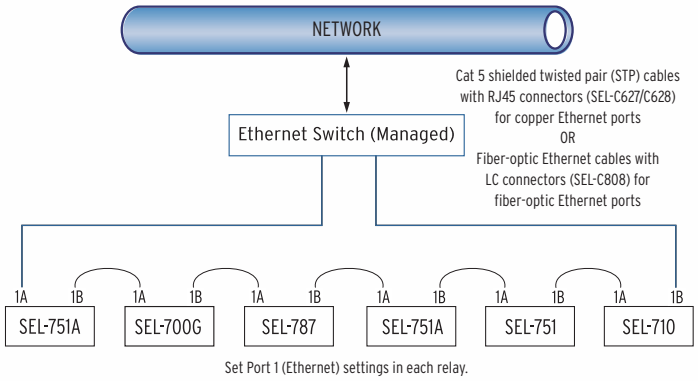

Figure 29 Ethernet Network Configuration With Ring Structure (Switched Mode)

Additional Features

MIRRORED BITS Relay-to-Relay Communications

The SEL-patented MIRRORED BITS communications technology provides bidirectional relay-to-relay digital communications. MIRRORED BITS can operate independently on as many as two EIA-232 rear serial ports and one fiber-optic rear serial port on a single SEL-700G.

This bidirectional digital communication creates eight additional virtual outputs (transmitted MIRRORED BITS) and eight additional virtual inputs (received MIRRORED BITS) for each serial port operating in the MIRRORED BITS mode (see *Figure 30*). Use these MIRRORED BITS to transmit/receive information between upstream relays and a downstream relay to enhance coordination and achieve faster tripping for downstream faults. MIRRORED BITS technology also helps reduce total scheme operating time by eliminating the need to assert output contacts to transmit information.

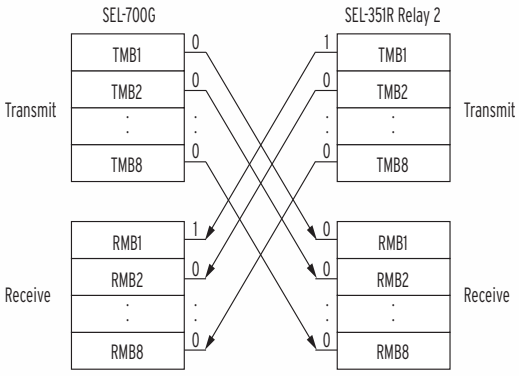

Figure 30 MIRRORED BITS Transmit and Receive Bits

Status and Trip Target LEDs

The SEL-700G includes 24 tricolor status and trip target LEDs on the front panel. When shipped from the factory, all LEDs are predefined and fixed in settings. You can reprogram these LEDs for specific applications. This combination of targets is explained and shown in *Figure 33*. Some front-panel relabeling of LEDs may be needed if you reprogram them for unique or specific applications—see *Configurable Labels*.

Event Messenger Points

The SEL-700G, when used with the SEL-3010 Event Messenger, can allow for ASCII-to-voice translation of as many as 32 user-defined messages, along with analog data that have been measured or calculated by the relay. With this combination, you can receive voice messages on any phone for alerts to transition of any Relay Word bits in the relay.

Verbal notification of breaker openings, fuse failures, RTD alarms, etc. can now be sent directly to your cell phone through the use of your SEL-700G and SEL-3010 (must be connected to an analog telephone line). In addition, messages can include an analog value such as current, voltage, or power measurements made by the SEL-700G.

Configurable Labels

Use the configurable labels to relabel the operator controls and LEDs (shown in *Figure 33*) to suit the installation requirements. This feature includes preprinted labels (with factory-default text), blank label media, and a Microsoft® Word template on CD-ROM. This allows quick, professional-looking labels for the SEL-700G. Labels may also be customized without the use of a PC by writing the new label on the blank stock provided. The ability to customize the control and indication features allows specific utility or industry proce-

dures to be implemented without the need for adhesive labels. All of the figures in this data sheet show the factory-default labels of the SEL-700G, including the standard model shown in *Figure 33*.

Web Server

Web Server allows you to communicate with the relay via the Ethernet Port without the need for additional communication software (web browser required). Web Server allows you to access metering and monitoring data, and also supports firmware upgrades.

Firmware Download Via Ethernet Ports

Relay firmware can be securely downloaded to your relay via the Ethernet port. The firmware is digitally signed to prevent malicious modification. Additionally, the Ethernet firmware download allows you to access and update all your network relays simultaneously.

Relay Dimensions

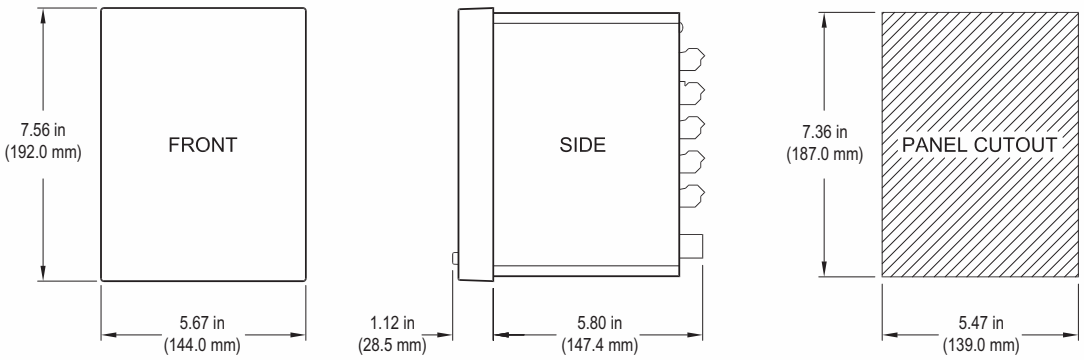

Figure 31 SEL-700G Dimensions for Rack- and Panel-Mount Models

Hardware Overview

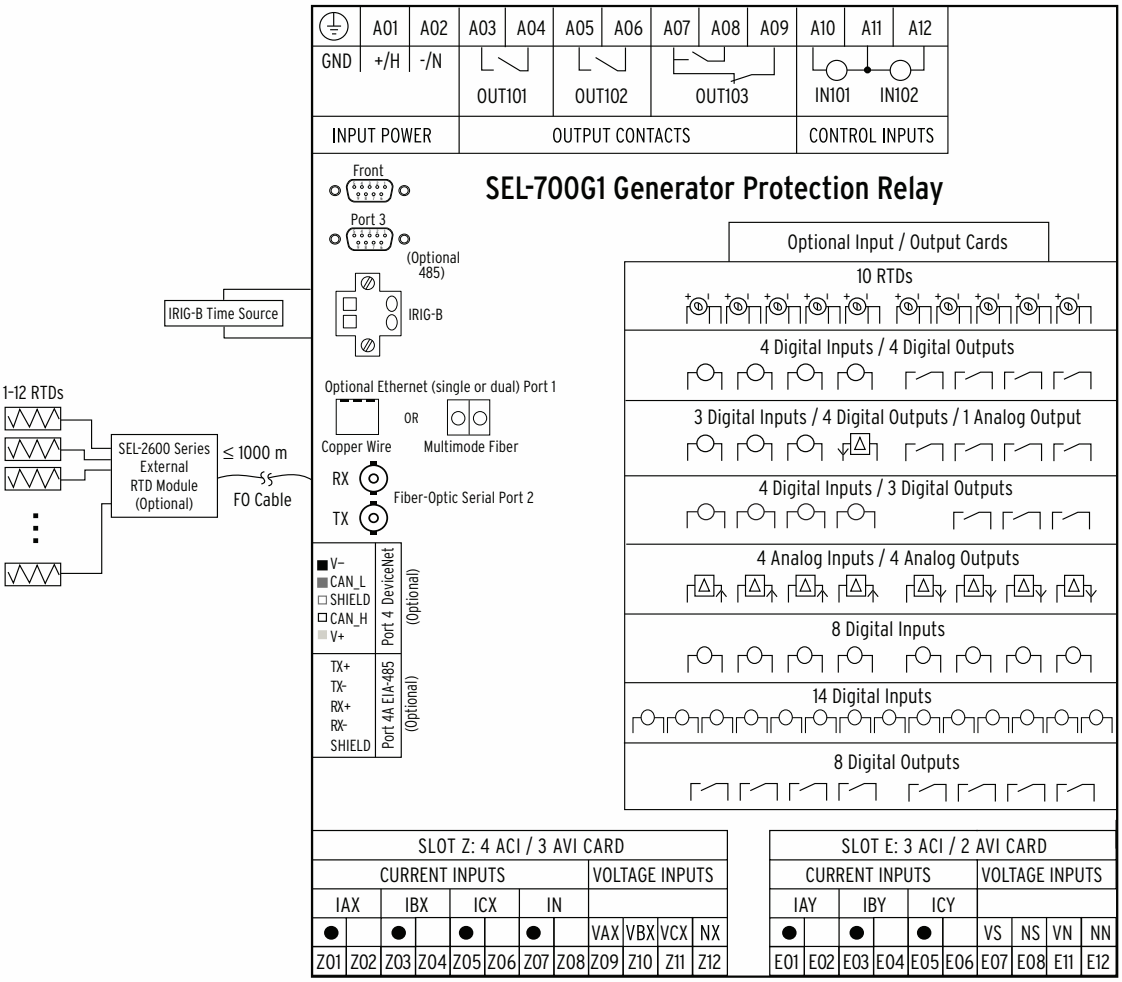

Figure 32 Typical Connection Diagram

Relay Panel Diagrams

SEL-700G1 Generator

(A) Front Panel With Default Configuration Labels

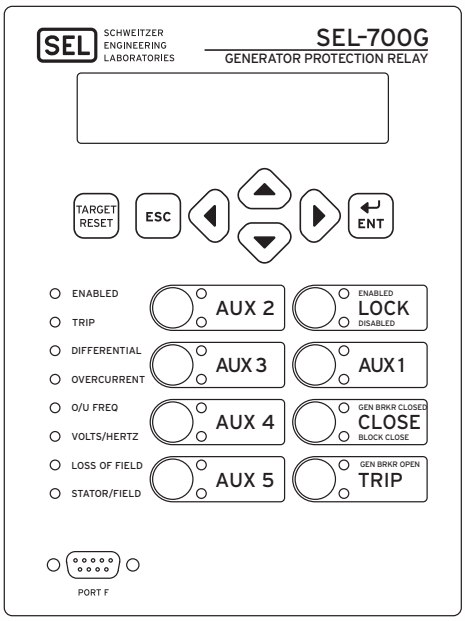

i4485a

(B) Rear-Panel View

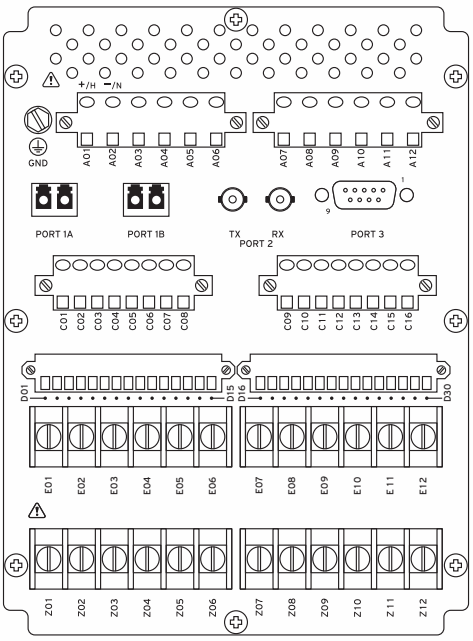

i4491a

(C) Side-Panel View

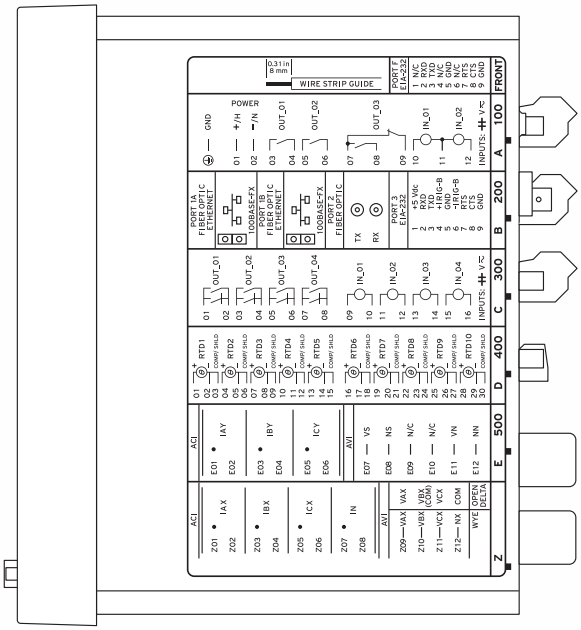

‡ SEE DOCUMENTATION FOR INPUT VOLTAGE RATING

i4488a

Figure 33 Dual-Fiber Ethernet, Fast Hybrid 4 DI/4 DO, 10 RTDs, 3 ACI/2 AVI, 4 ACI/3 AVI (Relay MOT 0700G11ACA9X76850830)

SEL-700GT Intertie

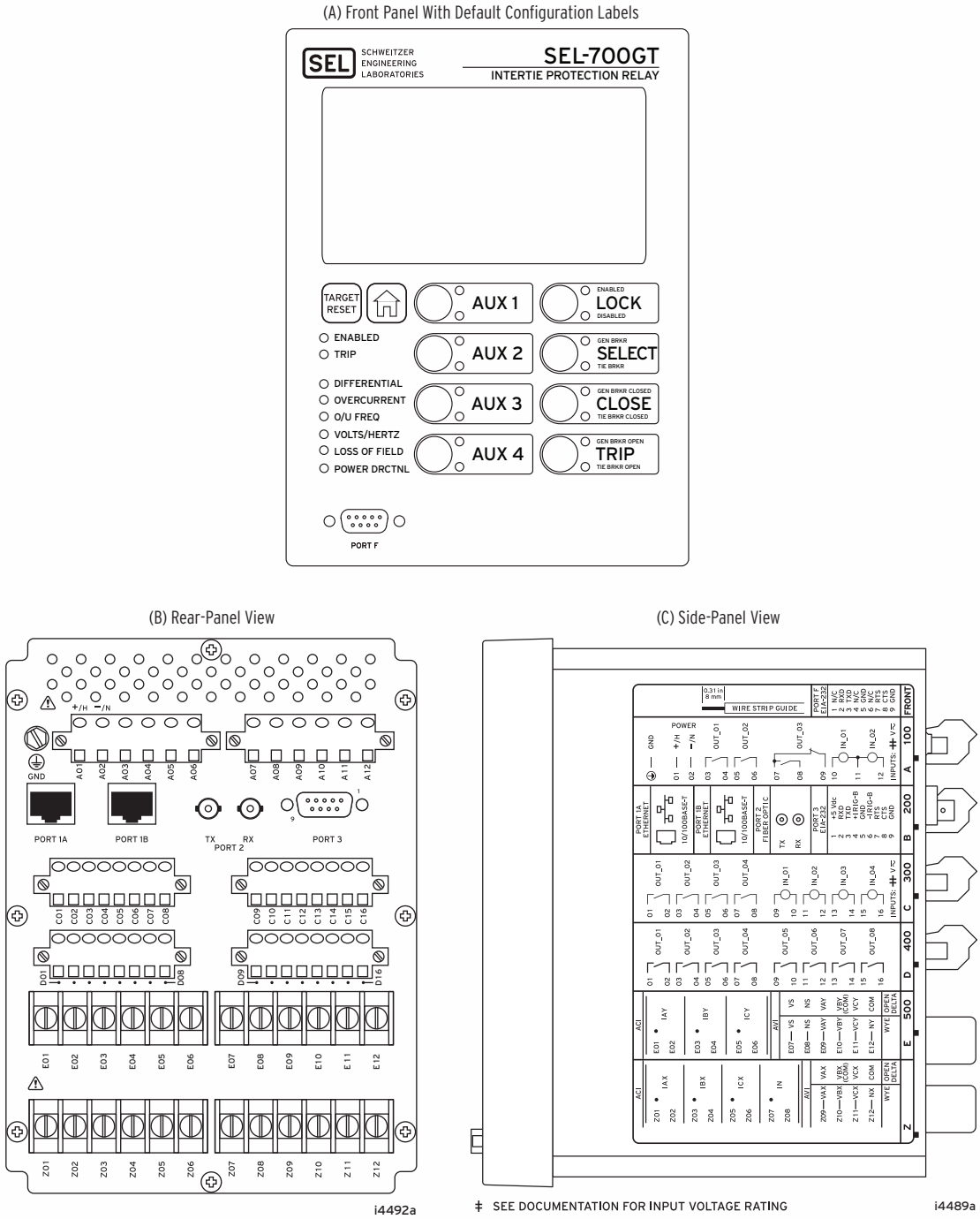

Figure 34 Dual Copper Ethernet, 4 DI/4 DO, 8 DO, 3 ACI/4 AVI, 4 ACI/3 AVI (Relay MOT 0700GT1A2X7585A630)

SEL-700GW Wind Generator

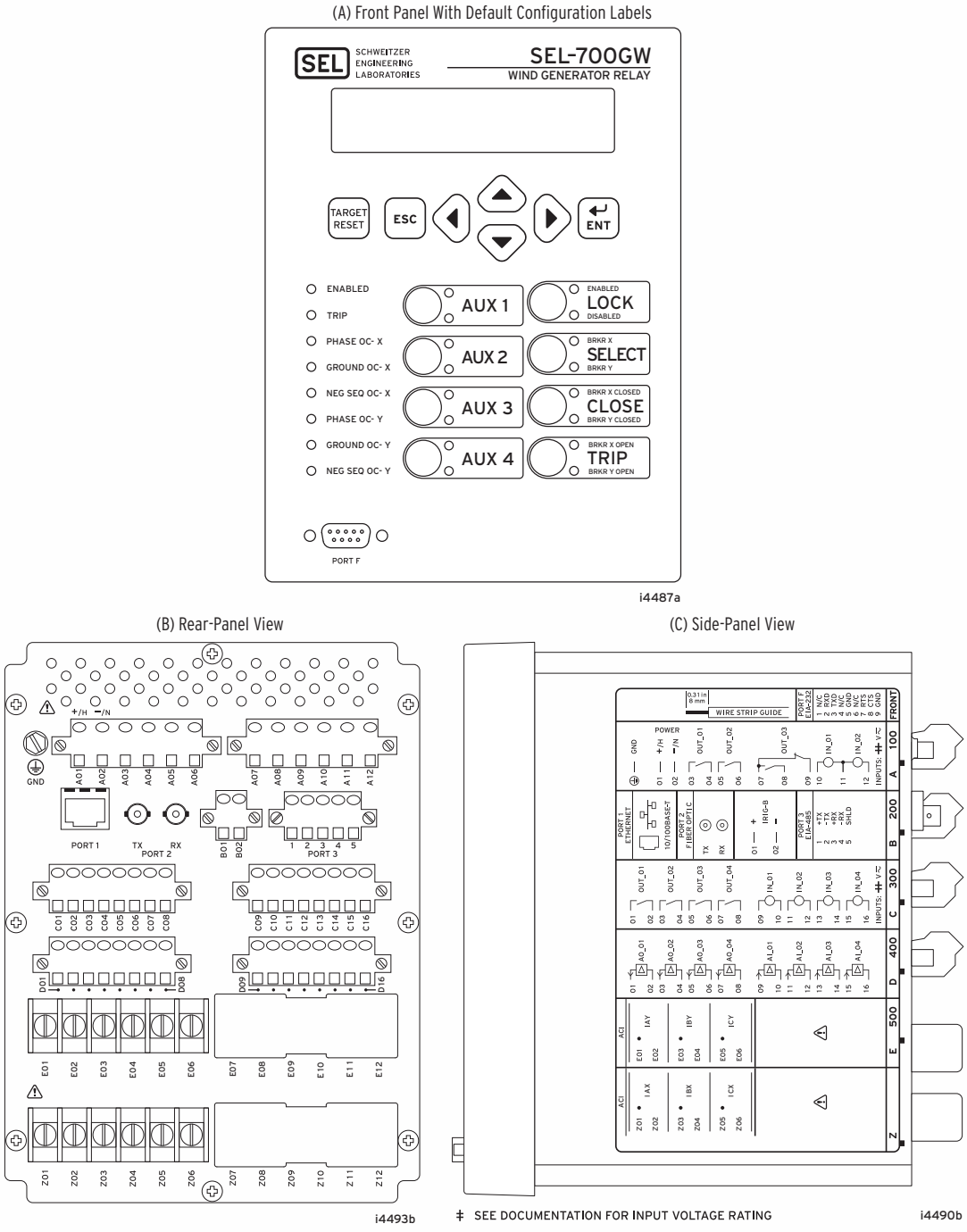

Figure 35 Copper Ethernet, 4 DI/4 DO, 4 AI/4 AO, 3 ACIE, 3 ACIZ (Relay MOT 0700GW1A1A6X77870310)

Applications

SEL-700G1 Generator Relay—Example 1

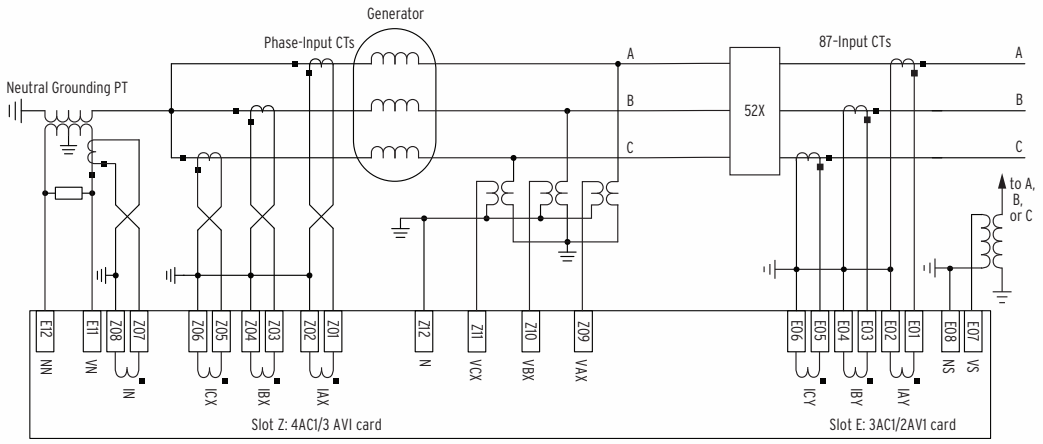

Figure 36 SEL-700G1 Relay Typical AC Current and Four-Wire Wye Voltage Connection

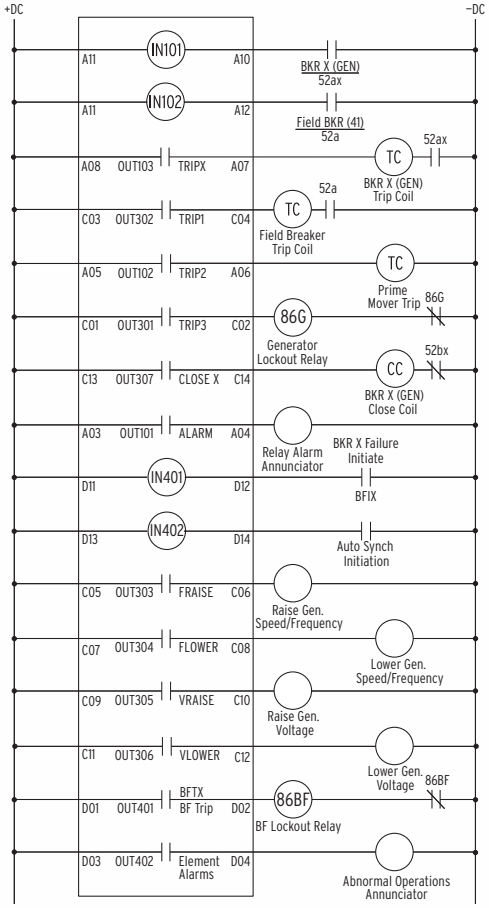

NOTES:

- IN101–102 and OUT 101–103 are in the "base" relay—Slot A Power Supply card.
- Slot C—Select 8DO card, OUT301–OUT308.
- Slot D—Select 3DI/4DO/1AO, IN401–IN403, OUT401–OUT404, or AO401.
- Spares IN403, OUT403–404, AO401, OUT308.
- Use Ethernet Port 1 for Synchrophasors, Modbus, DNP or IEC 61850.
- Use Port 2 for SEL-2600 RTD Module.
- Use Port 3 for SEL-2664 Field Ground Module (with a SEL-2812MR or 2812MT and a C805 fiber-optic cable).
- Settings changes required are not shown.
- Additional I/O and relay logic may be necessary for a specific application.

Figure 37 SEL-700G1 Typical DC External Connections

SEL-700G1 Generator Relay—Example 2

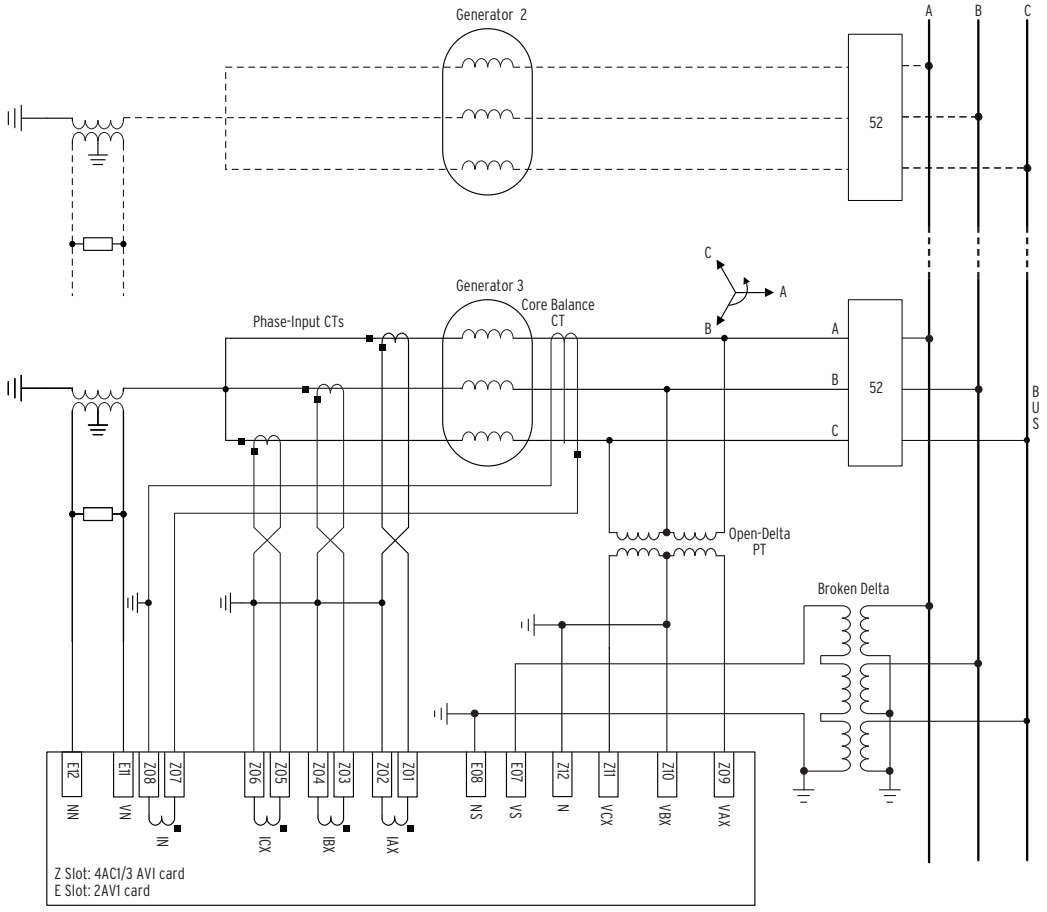

Figure 38 SEL-700G1+ Relay AC Connection Example, Multiple High-Impedance Grounded Generators Connected to a Common Bus, With 67N and Other Protection

SEL-700GT Intertie Relay

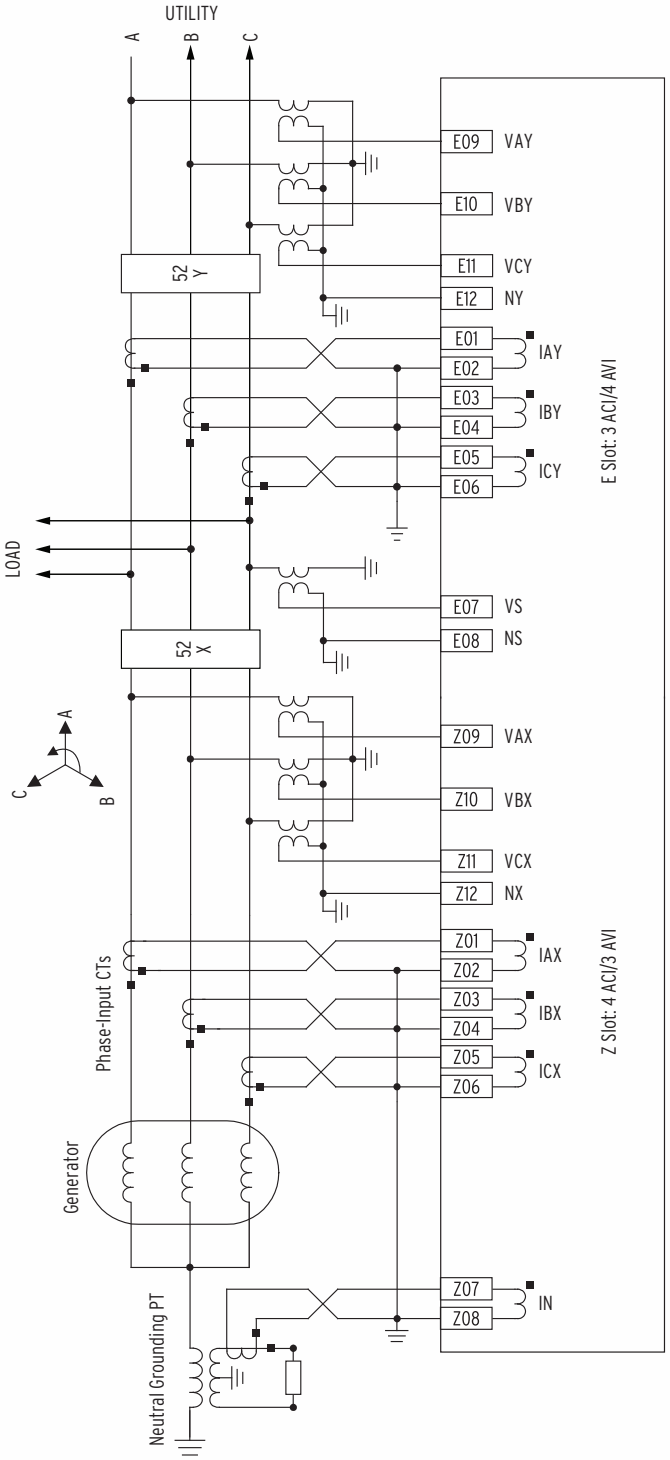

Figure 39 SEL-700GT Relay Typical AC Current and Four-Wire Wye Voltage Connection

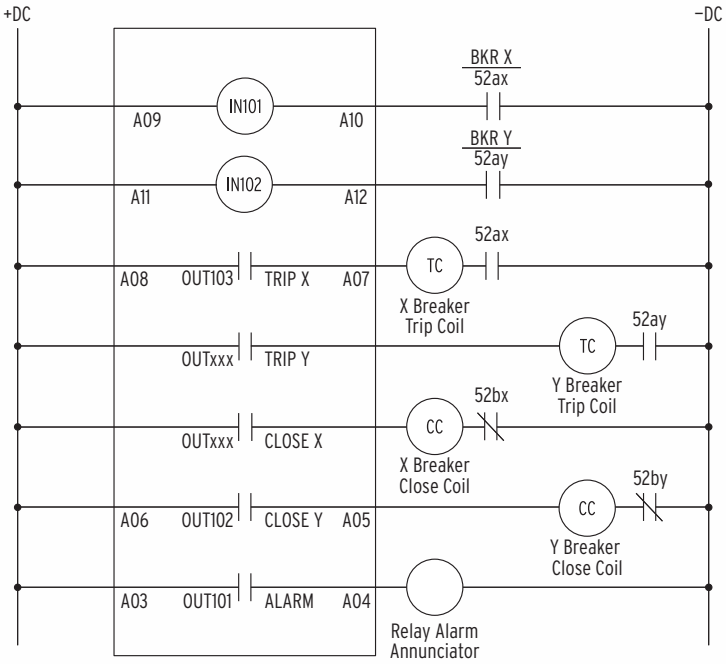

NOTES:
- OUTxxx requires an additional I/O card in Slot C or D.
- IN101-102 and OUT 101-103 are in the "base" relay.
- Additional I/O and relay logic may be necessary for a specific application.
- Settings changes are not shown.
- RTD Inputs—requires SEL-2600 RTD Module or RTD input card in Slot D.

Figure 40 SEL-700GT Typical DC External Connections

SEL-700GW Wind Generator Relay

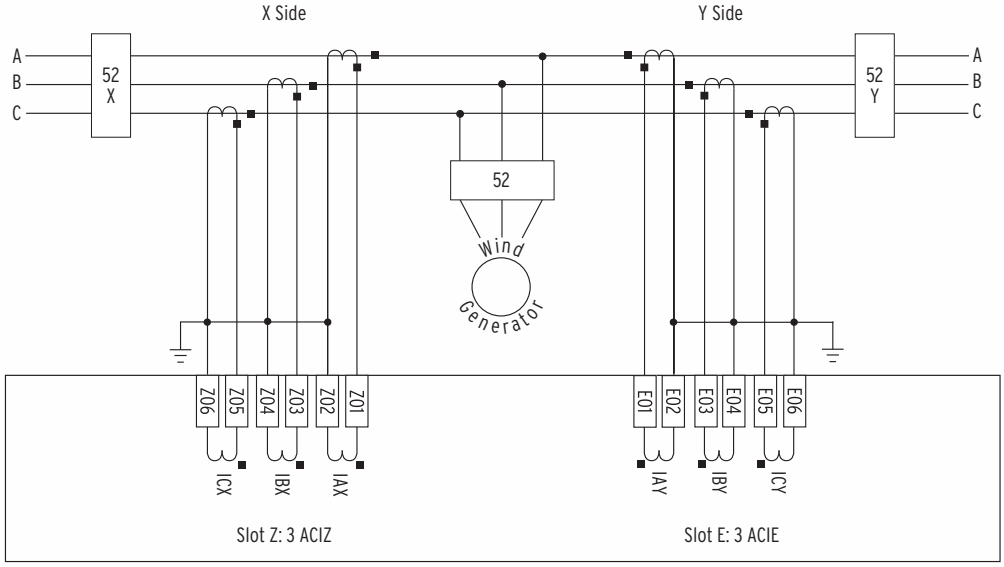

Figure 41 SEL-700GW Dual Feeder AC Current Connections

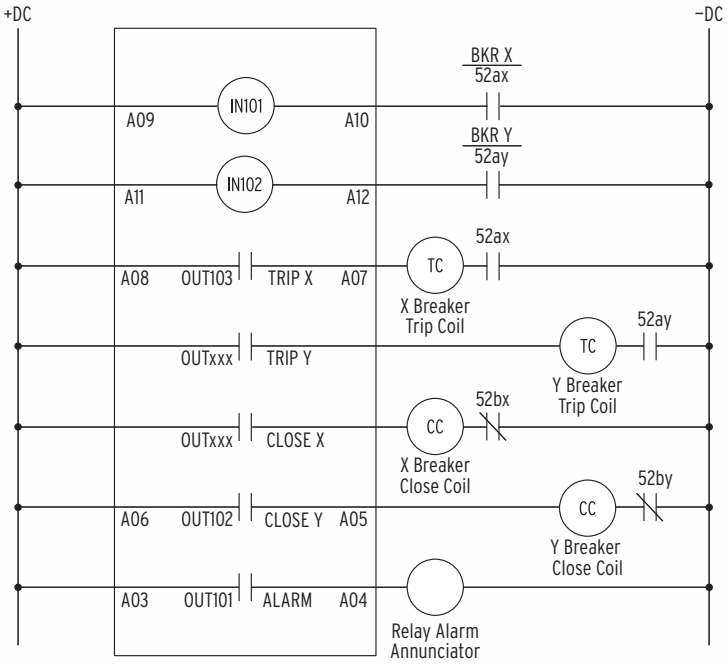

NOTES:
- OUTxxx requires an additional I/O card in Slot C or D.
- IN101-102 and OUT 101-103 are in the "base" relay.
- Additional I/O and relay logic may be necessary for a specific application.
- Settings changes are not shown.
- Field ground element (64F) requires SEL-2664 Field Ground Module.
- RTD Inputs—requires SEL-2600 RTD Module or RTD input card in Slot D.

Figure 42 SEL-700GW Typical DC External Connections

Specifications

Compliance

Designed and manufactured under an ISO 9001 certified quality management system

47 CFR 15B, Class A

Note: This equipment has been tested and found to comply with the limits for a Class A digital device, pursuant to part 15 of the FCC Rules. These limits are designed to provide reasonable protection against harmful interference when the equipment is operated in a commercial environment. This equipment generates, uses, and can radiate radio frequency energy and, if not installed and used in accordance with the instruction manual, may cause harmful interference to radio communications. Operation of this equipment in a residential area is likely to cause harmful interference in which case the user will be required to correct the interference at his own expense.

CE Mark in accordance with the requirements of the European Union

RCM Mark in accordance with the requirements of Australia

UKCA Mark in accordance with the requirements of United Kingdom

Normal Locations

UL Listed to U.S. and Canadian safety standards (File E212775, NRGU, NRGU7)

Hazardous Locations

UL Certified Hazardous Locations to U.S. and Canadian standards CL I, DIV 2; GP A, B, C, D; T3C, maximum surrounding temperature of 50°C (File E470448)

EU

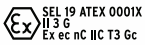

EN 60079-0:2012 + A11:2013, EN 60079-7:2015, EN 60079-15:2010, EN 60079-11:2012

Ambient air temperature shall not exceed –20°C ≤ Ta ≤ 50°C

Note: Where so marked, ATEX and UL Hazardous Locations Certification tests are applicable to rated supply specifications only and do not apply to the absolute operating ranges, continuous thermal, or short circuit duration specifications.

General

AC Current Input

Phase and Neutral Currents

I_{NOM} = 1 A or 5 A secondary depending on the model

Measurement Category:	II

I_{NOM} = 5 A

Continuous Rating:	3 • I_{NOM} @ 85°C 4 • I_{NOM} @ 55°C
A/D Measurement Limit:	217 A peak (154 A rms) symmetrical
Saturation Current Rating:	Linear to 96 A symmetrical
1-Second Thermal:	500 A
Burden (per Phase):	<0.1 VA @ 5 A

I_{NOM} = 1 A

Continuous Rating:	3 • I_{NOM} @ 85°C 4 • I_{NOM} @ 55°C
A/D Measurement Limit:	43 A peak (31 A rms) symmetrical
Saturation Current Rating:	Linear to 19.2 A symmetrical
1-Second Thermal:	100 A
Burden (per Phase):	<0.01 VA @ 1 A

AC Voltage Inputs

V_{NOM} (L-L secondary) Range:	20–250 V (if DELTA_Y := DELTA) 20–440 V (if DELTA_Y := WYE)
Rated Continuous Voltage:	300 Vac
10-Second Thermal:	600 Vac
Burden:	<0.1 VA
Input Impedance:	2 MΩ single-ended (phase-to-neutral) 4 MΩ differential (phase-to-phase)

Power Supply

Relay Start-Up Time:	Approximately 5–10 seconds (after power is applied until the **ENABLED** LED turns on)

High-Voltage Supply

Rated Supply Voltage:	110–240 Vac, 50/60 Hz 110–250 Vdc
Input Voltage Range (Design Range):	85–264 Vac 85–275 Vdc
Power Consumption:	<50 VA (ac) <25 W (dc)
Interruptions:	50 ms @ 125 Vac/Vdc 100 ms @ 250 Vac/Vdc

Low-Voltage Supply

Rated Supply Voltage:	24–48 Vdc
Input Voltage Range (Design Range):	19.2–60 Vdc
Power Consumption:	<25 W (dc)
Interruptions:	10 ms @ 24 Vdc 50 ms @ 48 Vdc

Fuse Ratings

LV Power Supply Fuse

Rating:	3.15 A
Maximum Rated Voltage:	300 Vdc, 250 Vac
Breaking Capacity:	1500 A at 250 Vac
Type:	Time-lag T

HV Power Supply Fuse

Rating:	3.15 A
Maximum Rated Voltage:	300 Vdc, 250 Vac
Breaking Capacity:	1500 A at 250 Vac
Type:	Time-lag T

Output Contacts

The relay supports Form A, B, and C outputs.

Dielectric Test Voltage:	2500 Vac
Impulse Withstand Voltage (U_{IMP}):	5000 V
Mechanical Durability:	100,000 no-load operations

Standard Contacts

Pickup/Dropout Time:	≤8 ms (coil energization to contact closure)

DC Output Ratings

Rated Operational Voltage:	250 Vdc
Rated Voltage Range:	19.2–275 Vdc
Rated Insulation Voltage:	300 Vdc
Make:	30 A @ 250 Vdc per IEEE C37.90
Continuous Carry:	6 A @ 70°C 4 A @ 85°C
1-Second Thermal:	50 A
Contact Protection:	360 Vdc, 115 J MOV protection across open contacts

Breaking Capacity (10,000 Operations) per IEC 60255-0-20:1974:

24 Vdc	0.75 A	L/R = 40 ms
48 Vdc	0.50 A	L/R = 40 ms
125 Vdc	0.30 A	L/R = 40 ms
250 Vdc	0.20 A	L/R = 40 ms

Schweitzer Part # 0700G11B1BOX76850300

Cyclic (2.5 Cycles/Second) per IEC 60255-0-20:1974:

24 Vdc	0.75 A	L/R = 40 ms
48 Vdc	0.50 A	L/R = 40 ms
125 Vdc	0.30 A	L/R = 40 ms
250 Vdc	0.20 A	L/R = 40 ms

AC Output Ratings

Maximum Operational Voltage (U_e) Rating: 240 Vac

Insulation Voltage (U_i) Rating (excluding EN 61010-1): 300 Vac

1-Second Thermal: 50 A

Contact Rating Designation: B300

B300 (5 A Thermal Current, 300 Vac Max)			
	Maximum Current		Max VA
Voltage	120 Vac	240 Vac	—
Make	30 A	15 A	3600
Break	3 A	1.5 A	360
PF < 0.35, 50–60 Hz			

Utilization Category: AC-15

AC-15		
Operational Voltage (Ue)	120 Vac	240 Vac
Operational Current (Ie)	3 A	1.5 A
Make Current	30 A	15 A
Break Current	3 A	1.5 A
Electromagnetic loads > 72 VA, PF < 0.3, 50–60 Hz		

Voltage Protection Across Open Contacts: 270 Vac, 115 J

Fast Hybrid (High-Speed, High-Current Interrupting)

DC Output Ratings

Rated Operational Voltage: 250 Vdc

Rated Voltage Range: 19.2–275 Vdc

Rated Insulation Voltage: 300 Vdc

Make: 30 A @ 250 Vdc per IEEE C37.90

Continuous Carry: 6 A @ 70°C
4 A @ 85°C

1-Second Thermal: 50 A

Open State Leakage Current: <500 µA

MOV Protection (Maximum Voltage): 250 Vac/330 Vdc

Pickup Time: <50 µs, resistive load

Dropout Time: ≤8 ms, resistive load

Break Capacity (10,000 Operations) per IEC 60255-0-20:1974:

48 Vdc	10.0 A	L/R = 40 ms
125 Vdc	10.0 A	L/R = 40 ms
250 Vdc	10.0 A	L/R = 20 ms

Cyclic Capacity (4 Cycles in 1 Second, Followed by 2 Minutes Idle for Thermal Dissipation) per IEC 60255-0-20:1974:

48 Vdc	10.0 A	L/R = 40 ms
125 Vdc	10.0 A	L/R = 40 ms
250 Vdc	10.0 A	L/R = 20 ms

AC Output Ratings

See *AC Output Ratings* for *Standard Contacts*.

Optoisolated Control Inputs

When Used With DC Control Signals

Pickup/Dropout Time: Depends on the input debounce settings

250 V: ON for 200–312.5 Vdc
OFF below 150 Vdc

220 V: ON for 176–275 Vdc
OFF below 132 Vdc

125 V: ON for 100–156.2 Vdc
OFF below 75 Vdc

110 V: ON for 88–137.5 Vdc
OFF below 66 Vdc

48 V: ON for 38.4–60 Vdc
OFF below 28.8 Vdc

24 V: ON for 15–30 Vdc
OFF for <5 Vdc

When Used With AC Control Signals

Pickup Time: 2 ms

Dropout Time: 16 ms

250 V: ON for 170.6–312.5 Vac
OFF below 106 Vac

220 V: ON for 150.2–275 Vac
OFF below 93.3 Vac

125 V: ON for 85–156.2 Vac
OFF below 53 Vac

110 V: ON for 75.1–137.5 Vac
OFF below 46.6 Vac

48 V: ON for 32.8–60 Vac
OFF below 20.3 Vac

24 V: ON for 14–30 Vac
OFF below 5 Vac

Current Draw at Nominal DC Voltage: 2 mA (at 220–250 V)
4 mA (at 48–125 V)
10 mA (at 24 V)

Rated Impulse Withstand Voltage (U_{imp}): 4000 V

Analog Output (Optional)

	1A0	4A0
Current:	4–20 mA	±20 mA
Voltage:	—	±10 V
Load at 1 mA:	—	0–15 kΩ
Load at 20 mA:	0–300 Ω	0–750 Ω
Load at 10 V:	—	>2000 Ω
Refresh Rate:	100 ms	100 ms
% Error, Full Scale, at 25°C:	<±1%	<±0.55%
Select From:	Analog quantities available in the relay	

Analog Input (Optional)

Maximum Input Range: ±20 mA
±10 V
Operational range set by user

Input Impedance: 200 Ω (current mode)
>10 kΩ (voltage mode)

Accuracy at 25°C

With user calibration: 0.050% of full scale (current mode)
0.025% of full scale (voltage mode)

Without user calibration: Better than 0.5% of full scale at 25°C

Accuracy Variation With Temperature: ±0.015% per °C of full scale (±20 mA or ±10 V)

Frequency and Phase Rotation

System Frequency: 50, 60 Hz

Phase Rotation: ABC, ACB

Frequency Tracking: 15–70 Hz

Time-Code Input

Format:	Demodulated IRIG-B
On (1) State:	$V_{ih} \geq 2.2$ V
Off (0) State:	$V_{il} \leq 0.8$ V
Input Impedance:	2 kΩ

Synchronization Accuracy

Internal Clock:	±1 µs
Synchrophasor Reports (e.g., MET PM):	±10 µs
All Other Reports:	±5 ms
SNTP Accuracy:	±1 ms (in an ideal network)
PTP Accuracy:	±1 ms
Unsynchronized Clock Drift Relay Powered:	2 minutes per year, typically

Communications Ports

Standard EIA-232 (2 Ports)

Location:	Front Panel Rear Panel
Data Speed:	300–38400 bps

EIA-485 Port (Optional)

Location:	Rear Panel
Data Speed:	300–19200 bps

Ethernet Port (Optional)

Single/Dual 10/100BASE-T copper (RJ45 connector)
Single/Dual 100BASE-FX (LC connector)

Standard Multimode Fiber-Optic Port

Location:	Rear Panel
Data Speed:	300–38400 bps

Fiber-Optic Ports Characteristics

Port 1 (or 1A, 1B) Ethernet

Wavelength:	1300 nm
Optical Connector Type:	LC
Fiber Type:	Multimode
Link Budget:	16.1 dB
Typical TX Power:	–15.7 dBm
RX Min. Sensitivity:	–31.8 dBm
Fiber Size:	62.5/125 µm
Approximate Range:	~6.4 km
Data Rate:	100 Mbps
Typical Fiber Attenuation:	–2 dB/km

Port 2 Serial

Wavelength:	820 nm
Optical Connector Type:	ST
Fiber Type:	Multimode
Link Budget:	8 dB
Typical TX Power:	–16 dBm
RX Min. Sensitivity:	–24 dBm
Fiber Size:	62.5/125 µm
Approximate Range:	~1 km
Data Rate:	5 Mbps
Typical Fiber Attenuation:	–4 dB/km

Optional Communications Cards

Option 1:	EIA-232 or EIA-485 communications card
Option 2:	DeviceNet communications card

Communications Protocols

SEL, Modbus, DNP, FTP, TCP/IP, Telnet, SNTP, IEEE 1588-2008 firmware-based PTP, IEC 61850 Edition 2, IEC 60870-5-103, PRP, IEEE 802.1Q-2014 Rapid Spanning Tree Protocol (RSTP). MIRRORED BITS, EVMSG, EtherNet/IP, C37.118 (synchrophasors), and DeviceNet

Operating Temperature

IEC Performance Rating:	–40° to +85°C (–40° to +185°F) (per IEC/EN 60068-2-1 and 60068-2-2)

NOTE: Not applicable to UL applications

NOTE: The front-panel display is impaired for temperatures below –20°C and above +70°C

DeviceNet Communications Card Rating:	+60°C (140°F) maximum
Optoisolated Control Inputs:	As many as 26 inputs are allowed in ambient temperatures of 85°C or less. As many as 34 inputs are allowed in ambient temperatures of 75°C or less. As many as 44 inputs are allowed in ambient temperatures of 65°C or less.

Operating Environment

Insulation Class:	I
Pollution Degree:	2
Overvoltage Category:	II
Atmospheric Pressure:	80–110 kPa
Relative Humidity:	5%–95%, noncondensing
Maximum Altitude Without Derating (Consult the Factory for Higher Altitude Derating):	2000 m

Dimensions

144.0 mm (5.67 in) x 192.0 mm (7.56 in) x 147.4 mm (5.80 in)

Weight

2.7 kg (6.0 lb)

Relay Mounting Screw (#8-32) Tightening Torque

Minimum:	1.4 Nm (12 in-lb)
Maximum:	1.7 Nm (15 in-lb)

Terminal Connections

Terminal Block

Screw Size:	#6
Ring Terminal Width:	0.310 inch maximum

Terminal Block Tightening Torque

Minimum:	0.9 Nm (8 in-lb)
Maximum:	1.4 Nm (12 in-lb)

Compression Plug Tightening Torque

Minimum:	0.5 Nm (4.4 in-lb)
Maximum:	1.0 Nm (8.8 in-lb)

Compression Plug Mounting Ear Screw Tightening Torque

Minimum:	0.18 Nm (1.6 in-lb)
Maximum:	0.25 Nm (2.2 in-lb)

Product Standards

Electromagnetic Compatibility:	IEC 60255-26:2013 IEC 60255-27:2013 UL 508 CSA C22.2 No. 14-05

Type Tests

Environmental Tests

Enclosure Protection:	IEC 60529:2001 + CRDG:2003 IP65 enclosed in panel (2-line display models) IP54 enclosed in panel (touchscreen display models) IP20 for relay backside panel IP50 for terminals enclosed in the dust protection assembly (protection against solid foreign objects only) (SEL Part #915900170). The 10°C temperature derating applies to the temperature specifications of the relay.
Vibration Resistance:	IEC 60255-21-1:1988 IEC 60255-27:2013, Section 10.6.2.1 Endurance: Class 2 Response: Class 2
Shock Resistance:	IEC 60255-21-2:1988 IEC 60255-27:2013, Section 10.6.2.2 IEC 60255-27:2013, Section 10.6.2.3 Withstand: Class 1 Response: Class 2 Bump: Class 1
Seismic (Quake Response):	IEC 60255-21-3:1993 IEC 60255-27:2013, Section 10.6.2.4 Response: Class 2
Cold:	IEC 60068-2-1:2007 IEC 60255-27:2013, Section 10.6.1.2 IEC 60255-27:2013, Section 10.6.1.4 –40°C, 16 hours
Dry Heat:	IEC 60068-2-2:2007 IEC 60255-27:2013, Section 10.6.1.1 IEC 60255-27:2013, Section 10.6.1.3 85°C, 16 hours
Damp Heat, Steady State:	IEC 60068-2-78:2001 IEC 60255-27:2013, Section 10.6.1.5 40°C, 93% relative humidity, 10 days
Damp Heat, Cyclic:	IEC 60068-2-30:2001 IEC 60255-27:2013, Section 10.6.1.6 25°–55°C, 6 cycles, 95% relative humidity
Change of Temperature:	IEC 60068-2-14:2009 IEC 60255-1:2010, Section 6.12.3.5 –40° to 85°C, ramp rate 1°C/min, 5 cycles

Dielectric Strength and Impulse Tests

Dielectric (HiPot):	IEC 60255-27:2013, Section 10.6.4.3 IEEE C37.90-2005 1.0 kVac on analog outputs, Ethernet ports 2.0 kVac on analog inputs, IRIG 2.5 kVac on contact I/O 3.6 kVdc on power supply, current, and voltage inputs
Impulse:	IEC 60255-27:2013, Section 10.6.4.2 0.5 J, 5 kV on power supply, contact I/O, ac current, and voltage inputs 0.5 J, 530 V on analog outputs IEEE C37.90:2005 0.5 J, 5 kV 0.5 J, 530 V on analog outputs

RFI and Interference Tests

EMC Immunity

Electrostatic Discharge Immunity:	IEC 61000-4-2:2008 IEC 60255-26:2013, Section 7.2.3 IEEE C37.90.3:2001 Severity Level 4 8 kV contact discharge 15 kV air discharge
Radiated RF Immunity:	IEC 61000-4-3:2010 IEC 60255-26:2013, Section 7.2.4 10 V/m IEEE C37.90.2-2004 20 V/m
Fast Transient, Burst Immunity[a]:	IEC 61000-4-4:2012 IEC 60255-26:2013, Section 7.2.5 4 kV @ 5.0 kHz 2 kV @ 5.0 kHz for comm. ports
Surge Immunity[a]:	IEC 61000-4-5:2005 IEC 60255-26:2013, Section 7.2.7 2 kV line-to-line 4 kV line-to-earth
Surge Withstand Capability Immunity[a]:	IEC 61000-4-18:2010 IEC 60255-26:2013, Section 7.2.6 2.5 kV common mode 1.0 kV differential mode 1.0 kV common mode on comm. ports IEEE C37.90.1-2012 2.5 kV oscillatory 4.0 kV fast transient
Conducted RF Immunity:	IEC 61000-4-6:2008 IEC 60255-26:2013, Section 7.2.8 10 Vrms
Magnetic Field Immunity:	IEC 61000-4-8:2009 IEC 60255-26:2013, Section 7.2.10 Severity Level: 1000 A/m for 3 seconds 100 A/m for 1 minute; 50/60 Hz IEC 61000-4-9:2001 Severity Level: 1000 A/m IEC 61000-4-10:2001 Severity Level: 100 A/m (100 kHz and 1 MHz)
Power Supply Immunity:	IEC 61000-4-11:2004 IEC 61000-4-17:1999 IEC 61000-4-29:2000 IEC 60255-26:2013, Section 7.2.11 IEC 60255-26:2013, Section 7.2.12 IEC 60255-26:2013, Section 7.2.13

EMC Emissions

Conducted Emissions:	IEC 60255-26:2013 Class A FCC 47 CFR Part 15.107 Class A Canada ICES-001 (A) / NMB-001 (A) EN 55011:2009 + A1:2010 Class A EN 55022:2010 + AC:2011 Class A EN 55032:2012 + AC:2013 Class A CISPR 11:2009 + A1:2010 Class A CISPR 22:2008 Class A CISPR 32:2015 Class A
Radiated Emissions:	IEC 60255-26:2013 Class A FCC 47 CFR Part 15.109 Class A Canada ICES-001 (A) / NMB-001 (A) EN 55011:2009 + A1:2010 Class A EN 55022:2010 + AC:2011 Class A EN 55032:2012 + AC:2013 Class A CISPR 11:2009 + A1:2010 Class A CISPR 22:2008 Class A CISPR 32:2015 Class A

Processing Specifications and Oscillography

AC Voltage and Current Inputs:	32 samples per power system cycle
Analog Inputs:	4 samples per power system cycle
Frequency Tracking Range:	15–70 Hz
Digital Filtering:	One-cycle cosine after low-pass analog filtering. Net filtering (analog plus digital) rejects dc and all harmonics greater than the fundamental.
Protection and Control Processing:	Processing interval is 4 times per power system cycle (except for math variables and analog quantities, which are processed every 25 ms). The protection elements 40, 51, and 78 are processed twice per cycle. Analog quantities for rms data are determined through use of data averaged over the previous 8 cycles.

Oscillography

Length:	15, 64, 180 cycles
Sampling Rate:	32 samples per cycle unfiltered 4 samples per cycle filtered
Trigger:	Programmable with Boolean expression
Format:	ASCII and Compressed ASCII Binary COMTRADE (32 samples per cycle unfiltered)
Time-Stamp Resolution:	1 ms
Time-Stamp Accuracy:	±5 ms

Sequential Events Recorder

Time-Stamp Resolution:	1 ms
Time-Stamp Accuracy (With Respect to Time Source) for all RWBs except those corresponding to digital inputs (IN*xxx*):	±5 ms
Time-Stamp Accuracy (With Respect to Time Source) for RWBs corresponding to digital inputs (IN*xxx*):	1 ms

Relay Elements

Instantaneous/Definite Time-Overcurrent (50P, 50G, 50N, 50Q)

Pickup Setting Range, A secondary	
5 A models:	0.50–96.00 A, 0.01 A steps
1 A models:	0.10–19.20 A, 0.01 A steps
Accuracy:	±5% of setting plus ±0.02 • I_{NOM} A secondary (steady-state pickup)
Time Delay:	0.00–400.00 seconds, 0.01 seconds steps, ±0.5% plus ±0.25 cycle 0.10–400.00 seconds, 0.01 seconds steps, ±0.5% plus ±0.25 cycle for 50Q
Pickup/Dropout Time:	<1.5 cycle

Inverse-Time Overcurrent (51P, 51G, 51N, 51Q)

Pickup Setting Range, A secondary	
5 A models:	0.50–16.00 A, 0.01 A steps
1 A models:	0.10–3.20 A, 0.01 A steps
Accuracy:	±5% of setting plus ±0.02 • I_{NOM} A secondary (steady-state pickup)
Time Dial	
US:	0.50–15.00, 0.01 steps
IEC:	0.05–1.00, 0.01 steps
Accuracy:	±1.5 cycles plus ±4% between 2 and 30 multiples of pickup (within rated range of current)

Differential (87)

Unrestrained Pickup Range:	1.0–20.0 in per unit of TAP
Restrained Pickup Range:	0.10–1.00 in per unit of TAP
Pickup Accuracy (A secondary)	
5 A Model:	±5% plus ±0.10 A
1 A Model:	±5% plus ±0.02 A
TAP Range (A secondary)	
5 A Model:	0.5–31.0 A
1 A Model:	0.1–6.2 A
Unrestrained Element	
Pickup Time:	0.8/1.0/1.9 cycles (Min/Typ/Max)
Restrained Element (With Harmonic Blocking)	
Pickup Time:	1.5/1.6/2.2 cycles (Min/Typ/Max)
Restrained Element (With Harmonic Restraint)	
Pickup Time:	2.62/2.72/2.86 cycles (Min/Typ/Max)

Harmonics

Pickup Range (% of fundamental):	5%–100%
Pickup Accuracy (A secondary)	
5 A Model:	±5% plus ±0.10 A of harmonic current
1 A Model:	±5% plus ±0.02 A of harmonic current
Time Delay Accuracy:	±0.5% plus ±0.25 cycle

Restricted Earth Fault (REF)

Pickup Range (per unit of I_{NOM} of neutral current input, IN):	0.05–3.00 per unit, 0.01 per-unit steps
Pickup Accuracy (A secondary)	
5 A Model:	±5% plus ±0.10 A
1 A Model:	±5% plus ±0.02 A
Timing Accuracy	
Directional Output Maximum Pickup/ Dropout Time:	1.75 cycles
ANSI Extremely Inverse TOC Curve (U4 With 0.5 Time Dial):	±5 cycles plus ±5% between 2 and 30 multiples of pickup (within rated range of current)

Undervoltage (27P, 27PP, 27V1, 27S)

Pickup Range:	Off, 2.0–300.0 V (2.0–520.0 V for phase-to-phase wye connected; 2.0–170.0 V positive-sequence, delta connected)
Accuracy:	±5% of setting plus ±2 V
Pickup/Dropout Time:	<1.5 cycle
Time Delay:	0.00–120.00 seconds, 0.01 second steps
Accuracy:	±0.5% plus ±0.25 cycle

Overvoltage (59P, 59PP, 59V1, 59S, 59Q, 59G)

Pickup Range:	Off, 2.0–300.0 V (2.0–520.0 V for phase-to-phase wye connected; 2.0–170.0 V positive sequence, delta connected)
Pickup Range (59G, 59Q):	Off, 2.0–200.0 V
Accuracy:	±5% of setting plus ±2 V
Pickup/Dropout Time:	<1.5 cycle

Time Delay:	0.00–120.00 seconds, 0.01 second steps
Accuracy:	±0.5% plus ±0.25 cycle

Inverse-Time Undervoltage (27I)

Setting Range:	OFF, 2.00–300.00 V (Phase elements, positive-sequence elements, phase-to-phase elements with delta inputs or synchronism voltage input) OFF, 2.00–520.00 V (Phase-to-phase elements with wye inputs)
Accuracy:	±1% of setting plus ±0.5 V
Time Dial:	0.00–16.00 s
Accuracy:	±1.5 cyc plus ±4% between 0.95 and 0.1 multiples of pickup

Inverse-Time Overvoltage (59I)

Setting Range:	OFF, 2.00–300.00 V (Phase elements, sequence elements, or phase-to-phase elements with delta inputs, neutral voltage input, or synchronism voltage input) OFF, 2.00–520.00 V (Phase-to-phase elements with wye inputs)
Accuracy:	±1% of setting plus ±0.5 V
Time Dial:	0.00–16.00 s
Accuracy:	±1.5 cyc plus ±4% between 1.05 and 5.5 multiples of pickup

Volts/Hertz (24)

Definite-Time Element

Pickup Range:	100%–200%
Steady-State Pickup Accuracy:	±1% of set point
Pickup Time:	25 ms @ 60 Hz (Max)
Time-Delay Range:	0.04–400.00 s
Time-Delay Accuracy:	±0.1% plus ±4.2 ms @ 60 Hz
Reset Time Range:	0.00–400.00 s

Inverse-Time Element

Pickup Range:	100%–200%
Steady-State Pickup Accuracy:	±1% of set point
Pickup Time:	25 ms @ 60 Hz (Max)
Curve:	0.5, 1.0, or 2.0
Factor:	0.1–10.0 s
Timing Accuracy:	±4% plus ±25 ms @ 60 Hz, for V/Hz above 1.2 multiple of pickup setting, and for operating times >4 s
Reset Time Range:	0.00–400.00 s

Composite-Time Element

Combination of Definite-Time and Inverse-Time specifications

User-Definable Curve Element

Pickup Range:	100%–200%
Steady-State Pickup Accuracy:	±1% of set point
Pickup Time:	25 ms @ 60 Hz (Max)
Reset Time Range:	0.00–400.00 s

Vector Shift (78VS)

Pickup Setting Range:	2.0°–30.0°, 0.1° increment
Accuracy:	±10% of the pickup setting, ±1 degree
Voltage Supervision Threshold:	20.0%–100.0% • VNOM
Pickup Time:	<3 cycles

Directional Power (32)

Instantaneous/Definite Time, 3 Phase Elements

Type:	+W, –W, +VAR, –VAR
Pickup Settings Range, VA secondary	
5 A Model:	1.0–6500.0 VA, 0.1 VA steps
1 A Model:	0.2–1300.0 VA, 0.1 VA steps
Accuracy:	±0.10 A • (L-L voltage secondary) and ±5% of setting at unity power factor for power elements and zero power factor for reactive power element (5 A nominal) ±0.02 A • (L-L voltage secondary) and ±5% of setting at unity power factor for power elements and zero power factor for reactive power element (1 A nominal)
Pickup/Dropout Time:	<10 cycles
Time Delay:	0.00–240.00 seconds, 0.01 second steps
Accuracy:	±0.5% plus ±0.25 cycle

Frequency (81)

Setting Range:	Off, 15.00–70.00 Hz
Accuracy:	±0.01 Hz (V1 > 60 V)
Pickup/Dropout Time:	<4 cycles
Time Delay:	0.00–400.00 seconds, 0.01 second steps
Accuracy:	±0.5% plus ±0.25 cycle

RTD Protection

Setting Range:	Off, 1°–250°C
Accuracy:	±2°C
RTD Open-Circuit Detection:	>250°C
RTD Short-Circuit Detection:	<–50°C
RTD Types:	PT100, NI100, NI120, CU10
RTD Lead Resistance:	25 ohm max. per lead
Update Rate:	<3 s
Noise Immunity on RTD Inputs:	To 1.4 Vac (peak) at 50 Hz or greater frequency
RTD Fault/Alarm/Trip Time Delay:	Approx. 12 s

Distance Element (21)

Two zones of compensator distance elements with load encroachment block

Reach Pickup Range:	5 A model: 0.1–100.0 ohms 1 A model: 0.5–500.0 ohms
Offset Range:	5 A model: 0.0–10.0 ohms 1 A model: 0.0–50.0 ohms
Steady-State Impedance Accuracy:	5 A model: ±5% plus ±0.1 ohm 1 A mode: ±5% plus ±0.5 ohm
Pickup Time:	33 ms at 60 Hz (Max)
Definite-Time Delay:	0.00–400.00 s
Accuracy:	±0.1% plus ±0.25 cycle
Minimum Phase Current:	5 A model: 0.5 A 1 A model: 0.1 A
Maximum Torque Angle Range:	90°–45°, 1° step

Loss-of-Field Element (40)

Two Mho Zones

Zone 1 Offset:	5 A model: –50.0 to 0.0 ohms 1 A model: –250.0 to 0.0 ohms
Zone 2 Offset:	5 A model: –50.0 to 50.0 ohms 1 A model: –250.0 to 250.0 ohms

Zone 1 and Zone 2 Diameter:	5 A model: 0.1–100.0 ohms 1 A model: 0.5–500.0 ohms
Steady-State Impedance Accuracy:	5 A model: ± 0.1 ohm plus ±5% of (offset + diameter) 1 A model: ±0.5 ohm plus ±5% of (offset + diameter)
Minimum Pos.-Seq. Signals:	5 A model: 0.25 V (V1), 0.25 A (I1) 1 A model: 0.25 V (V1), 0.05 A (I1)
Directional Element Angle:	–20.0° to 0.0°
Pickup Time:	3 cycles (Max)
Zone 1 and Zone 2 Definite-Time Delays:	0.00–400.00 s
Accuracy:	±0.1% plus ±1/2 cycle

Voltage-Restrained Phase Time-Overcurrent Element (51V)

Phase Pickup (A secondary):	5 A Model: 2.0–16.0 A 1 A Model: 0.4–3.2 A
Steady-State Pickup Accuracy:	5 A Model: ±5% plus ±0.10 A 1 A Model: ±5% plus ±0.02 A
Time Dials:	US: 0.50–15.00, 0.01 steps IEC: 0.05–1.00, 0.01 steps
Accuracy:	±4% plus ±1.5 cycles for current between 2 and 20 multiples of pickup (within rated range of current)
Linear Voltage Restraint Range:	0.125–1.000 per unit of VNOM

Voltage-Controlled Phase Time-Overcurrent Element (51C)

Phase Pickup (A secondary):	5 A Model: 0.5–16.0 A 1 A Model: 0.1–3.2 A
Steady State Pickup Accuracy:	5 A Model: ±5% plus ±0.10 A 1 A Model: ±5% plus ±0.02 A
Time Dials:	US: 0.50–15.00, 0.01 steps IEC: 0.05–1.00, 0.01 steps
Accuracy:	±4% plus ±1.5 cycles for current between 2 and 20 multiples of pickup (within rated range of current)

100 Percent Stator Ground Protection (64G)

Neutral Fundamental Overvoltage (64G1):	OFF, 0.1–150.0 V
Steady-State Pickup Accuracy:	±5% plus ±0.1 V
Pickup Time:	1.5 cycles (Max)
Definite-Time Delay:	0.00–400.00 s
Accuracy:	±0.1% plus ±0.25 cycle
Third-Harmonic Voltage Differential or Third-Harmonic Neutral Undervoltage Pickup 64G2:	0.1–20.0 V
Steady-State Pickup Accuracy:	±5% plus ±0.1 V
Third-Harmonic Voltage Differential Ratio Setting Range:	0.0 to 5.0
Pickup Time:	3 cycles (Max)
Definite-Time Delay:	0.00–400.00 s
Accuracy:	±0.1% plus ±0.25 cycle

Field Ground Protection (64F) (Requires SEL-2664 Field Ground Module)

Field Ground Protection Element:	0.5–200.0 kilohms, 0.1 kilohm step
Pickup Accuracy:	±5% plus ±500 ohms for 48 < VF < 825 Vdc ±5% plus ±20 kilohms for 825 < VF < 1500 Vdc (VF is the generator field winding excitation dc voltage)
Pickup Time:	2 s if the injection frequency in the SEL-2664 is selected at 1 Hz 8 s if the injection frequency in the SEL-2664 is selected at 0.25 Hz
Definite-Time Delay:	0.0–99.0 s
Maximum Definite-Time Delay Accuracy:	±0.5% plus ±5 ms

Out-of-Step Element (78)

Forward Reach:	5 A model: 0.1–100.0 ohms 1 A model: 0.5–500.0 ohms
Reverse Reach:	5 A model: 0.1–100.0 ohms 1 A model: 0.5–500.0 ohms
Single Blinder	
Right Blinder:	5 A model: 0.1–50.0 ohms 1 A model: 0.5–250.0 ohms
Left Blinder:	5 A model: 0.1–50.0 ohms 1 A model: 0.5–250.0 ohms
Double Blinder	
Outer Resistance Blinder:	5 A model: 0.2–100.0 ohms 1 A model: 1.0–500.0 ohms
Inner Resistance Blinder:	5 A model: 0.1–50.0 ohms 1 A model: 0.5–250.0 ohms
Steady-State Impedance Accuracy:	5 A model: ±0.1 ohm plus ±5% of diameter 1 A model: ±0.5 ohm plus ±5% of diameter
Pos.-Seq. Current Supervision:	5 A model: 0.25–30.00 A 1 A model: 0.05–6.00 A
Pickup Time:	3 cycles (Max)
Definite Time Delay:	0.00–1.00 s, 0.01 s step
Trip Delay Range:	0.00–1.00 s, 0.01 s step
Trip Duration Range:	0.00–5.00 s, 0.01 s step
Definite-Time Timers:	±0.1% plus ±1/2 cycle

Ground Differential Elements (87N)

Ground Differential Pickup:	5 A Model: 0.10*CTR/CTRN – 15.00 A 1 A Model: 0.02*CTR/CTRN – 3.00 A (Ratio CTR/CTRN must be within 1.0–40.0)
Steady-State Pickup Accuracy:	5 A Model: ±5% plus ±0.10 A 1 A Model: ±5% plus ±0.02 A
Pickup Time:	1.5 cycles (Max)
Time Delay Range:	0.00–5.00 s
Time Delay Accuracy:	±0.5% plus ±1/4 cycle

Schweitzer Part # 0700G11B1BOX76850300

Negative-Sequence Overcurrent Elements (46)

Definite-Time and Inverse-Time Neg.-Seq. I^2 Pickup:	2%–100% of generator rated secondary current
Generator Rated Secondary Current:	5 A Model: 1.0–10.0 A secondary 1 A Model: 0.2–2.0 A secondary
Steady-State Pickup Accuracy:	5 A Model: ±0.025 A plus ±3% 1 A Model: ±0.005 A plus ±3%
Pickup Time:	50 ms at 60 Hz (Max)
Definite-Time Delay Setting Range:	0.02–999.90 s
Maximum Definite-Time Delay Accuracy:	±0.1% plus ±4.2 ms at 60 Hz
Inverse-Time Element Time Dial:	K = 1 to 100 s
Linear Reset Time:	240 s fixed
Inverse-Time Timing Accuracy:	±4% plus ±50 ms at 60 Hz for $\lvert I_2 \rvert$ above 1.05 multiples of pickup

Rate-of-Change of Frequency (81R)

Pickup Setting Range:	Off, 0.10–15.00 Hz/s
Accuracy:	±100 mHz/s plus ±3.33% of pickup
Trend Setting:	INC, DEC, ABS
Pickup/Dropout Time:	3–30 cycles, depending on pickup setting
Pickup/ Dropout Delay Range:	0.10–60.00/0.00–60.00 s, 01 s increments
Voltage Supervision (Positive Sequence) Pickup Range:	Off, 12.5–300.0 V, 0.1 V increments

Synchronism Check (25Y) for Tie Breaker

Synchronism-Check Voltage Source:	VAY, VBY, VCY, VABY, VBCY, VCAY or angle from VAY or VABY
Voltage Window High Setting Range:	0.00–300.00 V
Voltage Window Low Setting Range:	0.00–300.00 V
Steady-State Voltage Accuracy:	±5% plus ±2.0 V (over the range of 12.5–300 V)
Maximum Percentage Voltage Difference:	1.0–15.0%
Maximum Slip Frequency:	–0.05 Hz to 0.50 Hz
Steady-State Slip Accuracy:	±0.02 Hz
Close Acceptance Angle 1, 2:	0°–80°
Breaker Close Delay:	0.001–1.000 s
Steady-State Angle Accuracy:	±2°

Synchronism Check (25X) for Generator Breaker

Synchronism-Check Voltage Source:	VAX, VBX, VCX, VABX, VBCX, VCAX or angle from VAX or VABX
Voltage Window High Setting Range:	0.00–300.00 V
Voltage Window Low Setting Range:	0.00–300.00 V
Steady-State Voltage Accuracy:	±5% plus ±2.0 V (over the range of 12.5–300 V)
Maximum Percentage Voltage Difference:	1.0–15.0%
Minimum Slip Frequency:	–1.00 Hz to 0.99 Hz
Maximum Slip Frequency:	–0.99 Hz to 1.00 Hz
Steady-State Slip Accuracy:	±0.02 Hz
Close Acceptance Angle 1, 2:	0°–80°
Target Close Angle:	–15° to 15°
Breaker Close Delay:	0.001–1.000 s
Close Failure Angle:	3°–120°
Steady-State Angle Accuracy:	±2°

Generator Thermal Model (49T)

Thermal Overload Trip Pickup Level:	30–250% of full load current (full load current I_{NOM} range: 0.2–2.0 • I_{NOM}, where I_{NOM} = 1 A or 5 A)
TCU Alarm Pickup Level:	50–99% Thermal Capacity Used
Time-Constant Range (2):	1–1000 minutes
Time Accuracy Pickup/ Dropout Time:	±(5% + 25 ms) at multiple-of-pickup ≥2, 50/60 Hz (pre-load = 0)

Autosynchronizing

Frequency Matching

Speed (Frequency) Control Outputs:	
Raise:	Digital output, adjustable pulse duration and interval
Lower:	Digital output, adjustable pulse duration and interval
Frequency Synchronism Timer:	5–3600 s, 1 s increments
Frequency Adjustment Rate:	0.01–10.00 Hz/s, 0.01 Hz/s increment
Frequency Pulse Interval:	1–120 s, 1 s increment
Frequency Pulse Minimum:	0.10–60.00 s, 0.01 s increment
Frequency Pulse Maximum:	0.10–60.00 s, 0.01 s increment
Kick Pulse Interval:	1–120 s, 1 s increments
Kick Pulse Minimum:	0.02–2.00 s, 0.01 s increments
Kick Pulse Maximum:	0.02–2.00 s, 0.01 s increments

Voltage Matching

Voltage Control Outputs:	
Raise:	Digital Output, adjustable pulse duration and interval
Lower:	Digital Output, adjustable pulse duration and interval
Voltage Synchronized Timer:	5–3600 s, 1 s increments
Voltage Adjustment Rate (Control System):	0.01–30.00 V/s, 0.01 V/s increment
Voltage Pulse Interval:	1–120 s, 1 s increment
Voltage Control Pulse Minimum:	0.10–60.00 s, 0.01 s increment
Voltage Control Pulse Maximum:	0.10–60.00 s, 0.01 s increment
Timing Accuracy:	±0.5% plus ±1/4 cycle

Inadvertent Energization

Generator De-Energization Setting Range:	0.00–100.00 s, 0.01 s increment
Inadvertent Energization Setting Range:	0.00–10.00 s, 0.01 s increment
Accuracy:	±0.5% of settings plus ±0.25 cycle

Metering Accuracy

Accuracies are specified at 20°C, nominal frequency, ac currents within (0.2–20.0) • I_{NOM} A secondary, and ac voltages within 50–250 V secondary unless otherwise noted.

Phase Currents:	±1% of reading, ±1° (±2.5° at 0.2–0.5 A for relays with I_{NOM} = 1 A)
3-Phase Average Current:	±1% of reading
Differential Quantities:	±5% of reading plus ±0.1 A (5 A nominal), ±0.02 A (1 A nominal)
Current Harmonics:	±5% of reading plus ±0.1 A (5 A nominal), ±0.02 A (1 A nominal)

IG (Residual Current):	±2% of reading, ±2° (±5.0° at 0.2–0.5 A for relays with I_{NOM} = 1 A)
IN (Neutral Current):	±1% of reading, ±1° (±2.5° at 0.2–0.5 A for relays with I_{NOM} = 1 A)
3I2 Negative-Sequence Current:	±2% of reading
System Frequency:	±0.01 Hz of reading for frequencies within 20–70 Hz (V1 > 60 V)
Line-to-Line Voltages:	±1% of reading, ±1° for voltages within 24–264 V
3-Phase Average Line-to-Line Voltage:	±1% of reading for voltages within 24–264 V
Line-to-Ground Voltages:	±1% of reading, ±1° for voltages within 24–264 V
3-Phase Average Line-to-Ground Voltages:	±1% of reading for voltages within 24–264 V
Voltage Harmonics:	±5% of reading plus ±0.5 V
3V2 Negative-Sequence Voltage:	±2% of reading for voltages within 24–264 V
Real 3-Phase Power (kW):	±3% of reading for 0.10 < pf < 1.00
Reactive 3-Phase Power (kVAR):	±3% of reading for 0.00 < pf < 0.90
Apparent 3-Phase Power (kVA):	±3% of reading
Power Factor:	±2% of reading
RTD Temperatures:	±2°C

Synchrophasor Accuracy

Maximum Message Rate

Nominal 60 Hz System:	60 messages per second
Nominal 50 Hz System:	50 messages per second

Accuracy for Voltages

Level 1 compliant as specified in IEEE C37.118 under the following conditions for the specified range.

Conditions

- At maximum message rate
- When phasor has the same frequency as the positive-sequence tracking quantity (see *Table K.10*)
- Frequency-based phasor compensation is enabled (PHCOMP := Y)
- The narrow bandwidth filter is selected (PMAPP := N)

Range

Frequency:	±5.0 Hz of nominal (50 or 60 Hz)
Magnitude:	30 V–250 V
Phase Angle:	–179.99° to 180°
Out-of-Band Interfering Frequency (Fs):	10 Hz ≤ Fs ≤ (2 • FNOM)

Accuracy for Currents

Level 1 compliant as specified in IEEE C37.118 under the following conditions for the specified range.

Conditions

- At maximum message rate
- When phasor has the same frequency as the positive-sequence tracking quantity (see *Table K.10*)
- Frequency-based phasor compensation is enabled (PHCOMP := Y)
- The narrow bandwidth filter is selected (PMAPP := N)

Range

Frequency:	±5.0 Hz of nominal (50 or 60 Hz)
Magnitude:	(0.4–2) • I_{NOM} (I_{NOM} = 1 A or 5 A)
Phase Angle:	–179.99° to 180°
Out-of-Band Interfering Frequency (Fs):	10 Hz ≤ Fs ≤ (2 • FNOM)

[a] Front port serial cable (non-fiber) lengths assumed to be <3 m.

© 2010–2022 by Schweitzer Engineering Laboratories, Inc. All rights reserved.

All brand or product names appearing in this document are the trademark or registered trademark of their respective holders. No SEL trademarks may be used without written permission. SEL products appearing in this document may be covered by U.S. and Foreign patents.

Schweitzer Engineering Laboratories, Inc. reserves all rights and benefits afforded under federal and international copyright and patent laws in its products, including without limitation software, firmware, and documentation.

The information in this document is provided for informational use only and is subject to change without notice. Schweitzer Engineering Laboratories, Inc. has approved only the English language document.

This product is covered by the standard SEL 10-year warranty. For warranty details, visit selinc.com or contact your customer service representative.

SCHWEITZER ENGINEERING LABORATORIES, INC.
2350 NE Hopkins Court • Pullman, WA 99163-5603 U.S.A.
Tel: +1.509.332.1890 • Fax: +1.509.332.7990
selinc.com • info@selinc.com

SEL-751 Feeder Protection Relay

Comprehensive Feeder Protection and Control With Arc-Flash Detection

Five-Inch, Color Touchscreen Display Model With Four Pushbuttons

Five-Inch, Color Touchscreen Display Model With Eight Pushbuttons

Two-Line Display Model With Four Pushbuttons

Two-Line Display Model With Eight Pushbuttons

New Features

- Increased SELOGIC capability to support 64 latch bits, counters, math variables, timers, and remote bits.
- Added Fixed GOOSE capability to support faster peer-to-peer communication.
- Added support for IEEE moderately inverse, very inverse, and extremely inverse curves for the 51 time-overcurrent element per IEEE C37.112.
- Added support for IEEE C37.111-2013 COMTRADE event format.
- Improved the Sequential Events Recorder (SER) time-stamp accuracy to ±1 ms.
- Added pickup bits 81D*n*P (*n* = 1–6) for the over- and underfrequency element and 81R*n*P (*n* = 1–4) for the rate-of-change-of-frequency element.

Major Features and Benefits

The SEL-751 Feeder Protection Relay provides a comprehensive combination of protection, fault-locating features, monitoring, control, and communication in an industrial package.

- **Standard Protection Features.** Protect lines and equipment with an extensive range of protection elements, including:
  - Overcurrent elements
  - Over- and underfrequency elements
  - Second- and fifth-harmonic current blocking (inrush blocking)
  - Demand metering elements
  - Breaker failure protection
  - Phase discontinuity detection
  - Cold-load pickup
  - Incipient cable fault detection
  - Under- and overfrequency elements
  - Breaker failure protection
  - SELOGIC® control equations
  - Cable or line thermal elements that conform to the IEC 60255-149 standard
- **Additional Protection Features.** Use the SEL-751 with one of the voltage input options to protect lines and equipment with rate-of-change of frequency elements, fast rate-of-change of frequency elements, definite-time and inverse-time over- and undervoltage elements, and load-encroachment and directional power elements. Also take advantage of the vector shift elements to aid in islanding detection.
- **Optional Directional Control.** Use overcurrent elements with directional control to optimize radial and looped network protection for lines and equipment. Best Choice Ground Directional Element® logic optimizes directional element performance and eliminates the need for many directional settings.
- **Optional High-Impedance Fault Detection.** Use the high-impedance fault (HIF) detection element to detect small current ground faults typically resulting from downed conductors on ground surfaces, such as earth, reinforced concrete, or other poorly conductive materials. HIF event data are available in COMTRADE or Compressed ASCII format.
- **Optional Arc-Flash Protection.** Reduce or eliminate damage from arc-flash events with the optional four- or eight-channel fiber-optic arc-flash detector inputs and protection elements. Settable arc-flash phase and neutral overcurrent elements, combined with arc-flash light detection elements, provide secure, reliable, and fast arc-flash event protection.
- **Optional Broken Conductor Detection.** The broken conductor detection (BCD) element identifies high-impedance downed conductors when combined with the Arc Sense™ technology (AST) option on wye-connected services. This detector operates on three-phase and single-conductor services and can help reduce the possibility of a public hazard, including fire.
- **Optional Low-Energy Analog (LEA) Voltage Inputs.** Measure voltages as high as 8 Vac rms.
- **Optional LEA Voltage Sensor Inputs, Rogowski Coil/LPCT Currents Inputs, and Conventional 200 mA Sensitive Neutral Input.** LEA input range for voltages is as high as 8 Vac rms. LEA current channel inputs support multiple gains supporting a wide range of primary currents.
- **Optional Synchronism Check and DC Station Battery Monitor.** Check single-phase voltage across a circuit breaker; measure dc voltage levels in the substation battery.
- **Operator Controls and Reclosing.** Trip and close the breaker easily with four or eight programmable front-panel pushbuttons, each with two tricolor LEDs. Implement remote and local control functions, and selectively reclose with synchronism and voltage checks.
- **Integrated Web Server.** View settings and metering and monitoring data, download event reports, and upgrade relay firmware with an intuitive password-protected web server.
- **Relay and Logic Settings Software.** Reduce engineering costs by using ACSELERATOR QuickSet® SEL-5030 Software for relay settings and logic programming and to simplify development of SELOGIC control equations.
- **Metering and Monitoring.** Use built-in metering functions to eliminate separately mounted metering devices. Analyze Sequential Events Recorder (SER) reports and oscillographic event reports for rapid commissioning, testing, and post-fault diagnostics. Unsolicited SER protocol allows station-wide collection of binary SER messages.
- **Optional Fault Location.** Reduce fault location and repair time with built-in impedance-based fault location and faulted phase indication.
- **Wye or Delta Voltage Inputs.** Connect voltage inputs that are wye-connected, open-delta-connected, or single voltage.

- **Additional Standard Features.** Improve your feeder protection with these additional standard features in every SEL-751: Modbus RTU, Event Messenger support and MIRRORED BITS® communications, load profile and breaker wear monitoring, support for 12 external RTDs (SEL-2600), IRIG-B input, advanced SELOGIC, and IEEE C37.118-2005-compliant synchrophasor protocol to provide real-time measurement data.
- **Optional Communications Protocols.** Optional communications protocols include IEC 61850 Edition 2, Modbus TCP/IP, Simple Network Time Protocol (SNTP), IEEE 1588-2008 firmware-based PTP, EtherNet/IP, DNP3 LAN/WAN, DNP3 serial, IEC 60870-5-103, RSTP, and PRP. With an Ethernet equipped relay, use the integrated web server to view settings and metering and monitoring data, download reports, and upgrade firmware.
- **Optional Communications Ports.** Elective communications ports include EIA-232 or EIA-485 multimode fiber-optic serial port and single or dual, copper or fiber-optic Ethernet ports.
- **Optional I/O Cards.** Digital and analog I/O options include 4 AI/4 AO, 4 DI/4 DO, 8 DI, 8 DO, 8 AI, 3 DI/4 DO/1 AO, 4 DI/3 DO, and 14 DI. An optional 10 internal RTD card is also available for the SEL-751. Conformal coating for chemically harsh and/or high moisture environments is also available as an option.
- **Supported Languages.** Choose English or Spanish for your serial ports, including the front-panel serial port. The standard relay front-panel overlay is in English; a Spanish overlay is available as an ordering option.

Model Comparison Guide: Exploring the SEL-751 Options

The SEL-751 protection features depend on the model selected. The models are configured with specific current/voltage input cards. The SEL-751 supports both conventional current and potential transformer inputs and low-energy analog sensor inputs. *Table 1* shows current (ACI) and voltage (AVI) card selections for the SEL-751 models.

Table 1 Current (ACI) and Voltage (AVI) Card Selection for SEL-751 Models

Model Description	Slot Z Card Option (MOT String Digits Number 14, 15)	Slot Z Inputs	Slot E Card Option (MOT String Digits Number 12, 13)	Slot E Inputs
Base SEL-751 AC Currents Only	4 ACI (A1, A2, A3, A5, A6, A7)	IA, IB, IC, IN	None (0X)	None
SEL-751 With AC Voltages (300 Vac)	4 ACI/3 AVI (81, 82, 83, 85, 86, 87)	IA, IB, IC, IN, VA, VB, VC	None (0X)	None
SEL-751 With LEA AC Voltages (8 Vac)	4 ACI/3 AVI (L1, L2, L3, L5, L6, L7)	IA, IB, IC, IN, VA, VB, VC	None (0X)	None
SEL-751 With AC Phase Voltages (300 Vac), Vsync (300 Vac), Vbat (300 V) Input, and 4 Arc-Flash Detection Inputs	4 ACI/3 AVI (81, 82, 83, 85, 86, 87)	IA, IB, IC, IN, VA, VB, VC	2 AVI/4 AFDI (70)	VS, VBAT, AF1, AF2, AF3, AF4
SEL-751 With LEA AC Phase Voltages (8 Vac), LEA Vsync (8 Vac), Vbat (300 V) Input, and 4 Arc-Flash Detection Inputs	4 ACI/3 AVI (L1, L2, L3, L5, L6, L7)	IA, IB, IC, IN, VA, VB, VC	2 AVI/4 AFDI (L0)	VS, VBAT, AF1, AF2, AF3, AF4
SEL-751 With LEA Voltage Sensor Inputs, Rogowski Coil or Low Power Current Inputs, 200 mA Neutral Inputs, and 7 Digital Inputs	4 ACI/3 AVI (7L)	IA, IB, IC, IN, VA, VB, VC	2 AVI/7 DI (LA, LB, LC, LD, LG, LH)	VS, VBAT, 7 DI

For the LEA option, the current sensors are based on Rogowski coils/low-power current transformers (LPCT), and the voltage sensors are based on resistive or capacitive voltage dividers.

Figure 1 shows Slot Z, LEA current input, with Rogowski coil connection.

Figure 1 Slot Z LEA Card With Rogowski Coil Connection for Current Input

The SEL-751 offers an extensive variety of protection features, depending on the model and options selected. *Table 2* lists the protection features available in each model.

Table 2 SEL-751 Protection Elements (Sheet 1 of 2)

Protection Element		Slot Z 4 ACI Card (Current Only Model) With 1 A or 5 A Neutral Channel	Slot Z 4 ACI/ 3 AVI Card With 1 A or 5 A Neutral Channel	Slot Z 4 ACI/ 3 AVI Card With 200 mA Neutral Channel	Slot Z 4 ACI/ 3 AVI LEA Card With 200 mA Neutral Channel
50P	Max. Phase Overcurrent	X	X	X	X
67P	Max. Phase Overcurrent With Directional Control		X[a]	X[b]	X[b]
50Q	Neg.-Seq. Overcurrent	X	X	X	X
67Q	Neg.-Seq. Overcurrent With Directional Control		X[a]	X[b]	X[b]
50G	Residual Overcurrent	X	X	X	X
67G	Residual Overcurrent With Directional Control		X[a]	X[b]	X[b]
50N	Neutral Overcurrent	X	X	X	X
67N	Neutral Overcurrent With Directional Control			X[b]	X[b]
50INC	Incipient Cable Fault Detection	X	X	X	X
51*m*P	Phase Time Overcurrent (*m* = A, B, C)	X	X	X	X
51P	Max. Phase Time Overcurrent	X	X	X	X
51P	Max. Phase Time Overcurrent With Directional Control		X[a]	X[b]	X[b]
51G	Residual Time Overcurrent	X	X	X	X
51G	Residual Time Overcurrent With Directional Control		X[a]	X[b]	X[b]

Table 2 SEL-751 Protection Elements (Sheet 2 of 2)

Protection Element		Slot Z 4 ACI Card (Current Only Model) With 1 A or 5 A Neutral Channel	Slot Z 4 ACI/ 3 AVI Card With 1 A or 5 A Neutral Channel	Slot Z 4 ACI/ 3 AVI Card With 200 mA Neutral Channel	Slot Z 4 ACI/ 3 AVI LEA Card With 200 mA Neutral Channel
51Q	Neg.-Seq. Time Overcurrent	X	X	X	X
51Q	Neg.-Seq. Time Overcurrent With Directional Control		X[a]	X[b]	X[b]
51N	Neutral Time Overcurrent	X	X	X	X
51N	Neutral Time Overcurrent With Directional Control			X[b]	X[b]
SEF	Sensitive Earth Fault			X	X
HBL	Second- and Fifth-Harmonic Blocking	X	X	X	X
FLOC	Fault Locator		X	X	X
27	Undervoltage (Phase, Phase-to-Phase, Vsync)		X	X	X
59	Overvoltage (Phase, Phase-to-Phase, Seq., Vsync)		X	X	X
27I	Inverse Time Undervoltage		X	X	X
59I	Inverse Time Overvoltage		X	X	X
60LOP	Loss of Potential		X	X	X
32	Directional Power		X	X	X
49T	IEC Thermal (Line/Cable)	X	X	X	X
55	Power Factor		X	X	X
78VS	Vector Shift		X	X	X
81	Over- and Underfrequency	X	X	X	X
81R	Rate-of-Change of Frequency		X	X	X
81RF	Fast Rate-of-Change of Frequency		X	X	X
25	Synchronism Check		X[c]	X[c]	X[c]
BF	Breaker Failure	X	X	X	X
49RTD	Resistance Temperature Detectors (RTDs)	X[d]	X[d]	X[d]	X[d]
79	Reclosing	X[d]	X[d]	X[d]	X[d]
HIF AST	High-Impedance Fault Detection With Arc Sense Technology		X[d]	X[d]	X[d]
AFT	Arc-Flash Detection	X[d]	X[d]	X[d]	X[d]
PPD	Phase Discontinuity Detection		X	X	X
BCD	Broken Conductor Detection		X[d, e]	X[d, e]	X[d, e]
CLPU	Cold-Load Pickup Element	X	X	X	X

[a] Available when ordered with the directional option. The 1 A/5 A neutral channel is suitable for solidly grounded systems and also impedance-grounded systems, depending on the available fault current level.
[b] Available when ordered with the directional option. The 200 mA neutral channel is suitable for ungrounded, low-impedance grounded, high-impedance grounded, and Petersen coil-grounded applications.
[c] Available with the 2 AVI/4 AFDI or 2 AVI/7 DI card in Slot E.
[d] Available as ordering options.
[e] Available only for models with Arc Sense technology.

The SEL-751 offers four front-panel HMI layouts that are MOT dependent. *Table 3* lists the HMI options for the SEL-751 front panel.

Table 3 SEL-751 Front-Panel Options

Model/Display Description[a]	Front-Panel Option (MOT String Digit Number 16)	Number of Pushbuttons	LED Type
SEL-751With Two-Line Display (2 x 16 characters)	0	8	Tricolor
SEL-751 With Two-Line Display (2 x 16 characters)	1	4	Tricolor
SEL-751 With Touchscreen Display (5-inch, color, 800 x 480 pixels)	A	8	Tricolor
SEL-751With Touchscreen Display (5-inch, color, 800 x 480 pixels)	B	4	Tricolor

[a] For ordering options, refer to the SEL-751 MOT.

Functional Overview

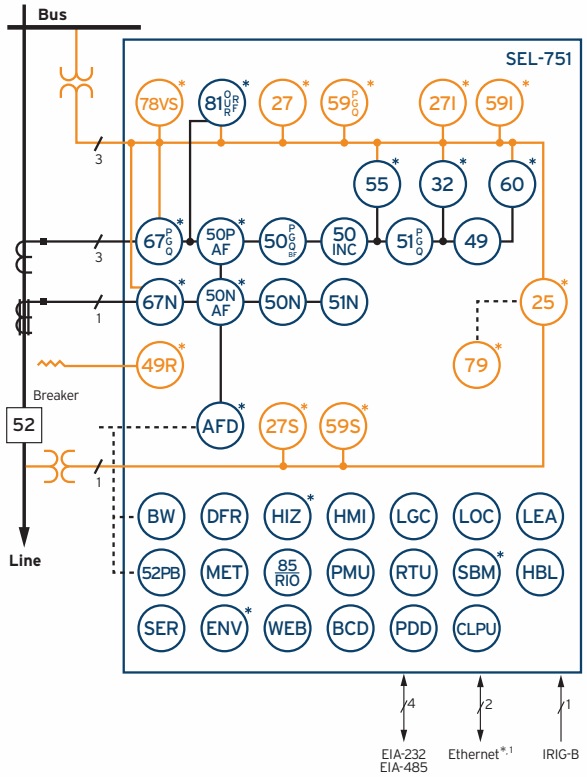

- Low-Energy Analogs (LEA) for AC Voltage Inputs (8 Vac RMS)*
- LEA Voltage Sensor Inputs, Rogowski Coil/LPCT Current Inputs, and Conventional 200 mA Sensitive Neutral Input
- Sequential Events Recorder
- Event Reports and Load Profile
- Web Server
- SEL ASCII, Modbus RTU, Ethernet*, Modbus TCP*, IEC 61850 Edition 2*, DNP LAN/WAN*, DNP3 Serial*, SNTP*, IEEE 1588-2008 Firmware-Based PTP*, Telnet*, IEC 60870-5-103*, EtherNet/IP*, RSTP*, PRP*, FTP*, and DeviceNet Communications*
- Event Messenger Compatible
- Two Inputs and Three Outputs Standard
- I/O Expansion*—Additional Contact Inputs/Outputs, Analog Inputs/Outputs, and RTD Inputs
- ST Fiber-Optic Communication Port*
- Single or Dual Ethernet, Copper or Fiber-Optic Communications Port*
- Battery-Backed Clock, IRIG-B Time Synchronization
- Instantaneous Metering
- Four or Eight Programmable Front-Panel Pushbuttons and Tricolor LED Indicators
- Advanced SELogic® Control Equations
- 32 Programmable Display Messages
- Station Battery Monitor*
- Breaker Wear Monitoring
- Synchrophasor Protocol (IEEE C37.118-2005)
- Arc-Flash Protection*
- Peak Demand, Demand Metering
- Cold-Load Pickup
- Load Encroachment
- High-Impedance Fault Detection*
- Phase Discontinuity Detection
- Broken Conductor Detection*
- Fault Locator
- Directional Protection*
- Mirrored Bits Communications
- Front-Panel Tricolor LED Programmable Targets
- Front-Panel HMI with 2 x 16 Character LCD
- 5-Inch, Color, 800 x 480 Touchscreen Display*

*Optional

Figure 2 Functional Diagram

Protection Features

Overcurrent Elements

The SEL-751 includes a robust set of phase, negative-sequence, residual, and neutral overcurrent elements. Each element type has four levels of instantaneous protection with individual torque control and definite-time delay settings. Each element type has two inverse-time overcurrent elements (except negative-sequence, which has one time-overcurrent element). *Table 4* lists the curves available in the SEL-751.

Table 4 Inverse-Time Overcurrent Curves

US	IEC	IEEE
Moderately Inverse	Standard Inverse	Moderately Inverse
Inverse	Very Inverse	Very Inverse
Very Inverse	Extremely Inverse	Extremely Inverse
Extremely Inverse	Long-Time Inverse	
Short-Time Inverse	Short-Time Inverse	

The SEL-751 has two reset characteristic choices for each time-overcurrent element. One choice resets the elements if current drops below pickup for at least one cycle. The other choice emulates electromechanical induction disc elements, where the reset time depends on the time dial setting, the percentage of disc travel, and the amount of current.

Overcurrent Elements for Phase Fault Detection

The SEL-751 provides the tools necessary for sensitive fault protection while accommodating heavily loaded circuits. Where heavy loading prevents sufficiently sensitive setting of the phase overcurrent elements to detect lower magnitude phase-to-ground faults, residual-ground overcurrent elements are available to provide sensitive ground fault protection without tripping under balanced heavy load conditions. Similarly, when heavy loading prevents sufficiently sensitive setting of the phase overcurrent elements to detect lower magnitude phase-to-phase faults, negative-sequence overcurrent elements are available to provide more sensitive phase-to-phase fault detection without tripping under balanced heavy load conditions. You can set phase overcurrent element pickup sufficiently high to accommodate heavy load while retaining sensitivity to higher magnitude three-phase faults.

On extremely heavily loaded feeders, SEL-751 load-encroachment logic adds security in cases when you cannot set phase overcurrent elements to provide adequate three-phase fault sensitivity while also accommodating load. With this logic, you can set the phase overcurrent elements below peak load current so that the relay can detect end-of-line phase faults in heavily loaded feeder applications. This load-encroachment logic uses positive-sequence load-in and load-out elements to discriminate between load and fault conditions based on the magnitude and angle of the positive-sequence impedance. When the measured positive-sequence load impedance (Z1) is within a region the load-encroachment settings define, load-encroachment logic blocks the phase overcurrent elements. As *Figure 3* shows, a phase fault causes Z1 to move from a load region to the line angle and leads to operation of the phase overcurrent elements.

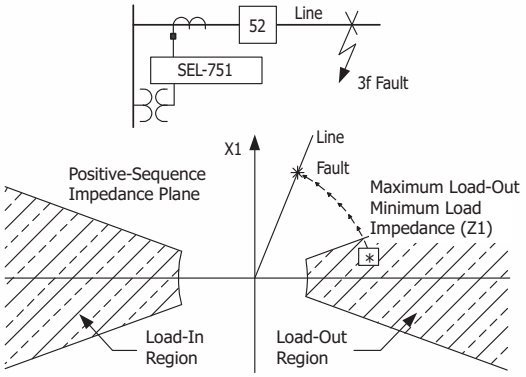

Figure 3 Load Encroachment Characteristics

Overcurrent Elements for Ground Fault Detection

Residual-ground (I_G) and neutral (I_N) overcurrent elements detect ground faults. Increase security by controlling these elements using optoisolated inputs or the internal ground directional element. The SEL-751 protection system includes patented Best Choice Ground Directional Element logic, providing a selection of negative-sequence impedance, zero-sequence impedance, and zero-sequence current polarizing techniques for optimum directional ground element control.

Directional Elements Increase Sensitivity and Security

Phase and ground directional elements come standard in an SEL-751 with the directional control option. An automatic setting mode (EDIR = AUTO) sets all directional threshold settings according to replica positive-sequence and zero-sequence line impedance settings (Z1MAG, Z1ANG, Z0MAG, and Z0ANG) for line protection applications. For all non-line protection applications, set EDIR = Y to enable and set appropriate directional element thresholds. Phase directional elements provide directional control to the phase- and negative-sequence overcurrent elements.

Phase directional characteristics include positive-sequence and negative-sequence directional elements working together. The positive-sequence directional element memory provides a reliable output for close-in, forward, or reverse three-phase faults where each phase voltage is zero.

Ground directional elements provide directional control to the residual-ground and neutral overcurrent elements. Patented negative-sequence, zero-sequence impedance directional elements, and the zero-sequence current directional element use the same principles proven in our SEL transmission line relays. Our patented Best Choice Ground Directional Element logic selects the best available ground directional element for the ORDER setting you provide.

Directional Protection for Various System Grounding Practices

Current channel IN, ordered with an optional 0.2 A secondary nominal rating, provides directional ground protection for the following systems:

- Ungrounded systems
- High-impedance grounded systems
- Petersen coil-grounded systems
- Low-impedance grounded systems

This optional directional control allows the faulted feeder to be identified on a multifeeder bus with an SEL-751 on each feeder (*Figure 4*). Alarm or trip for the ground fault condition with sensitivity down to 5 mA secondary.

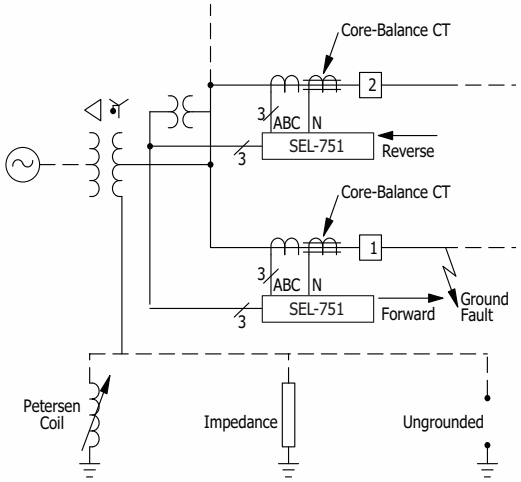

Figure 4 Apply SEL-751 Relays to Petersen Coil-Grounded, Impedance-Grounded, and Ungrounded Systems for Directional Control

Line/Cable Thermal Elements

Power lines and cables are designed to operate under a certain temperature range. Because equipment is often used as close to the operating limits as possible, the importance of protecting equipment against thermal overloads becomes more critical. The thermal overload protection element is used to protect the overhead lines and cables against thermal damage (including insulation degradation and loss of equipment life) and to monitor the thermal state of the overhead lines and cables. The temperature is calculated using a thermal model according to IEC 60255-149.

Incipient Cable Fault Detection

Cable insulation degrades over time. The incipient cable fault detection element can monitor for self-extinguishing, half-cycle overcurrent events that precede typical cable insulation failure. Monitoring the number of incipient faults can provide an early warning of cable insulation breakdown. This information can be used for preventative maintenance.

Cold-Load Pickup Element

Cold-load pickup is the phenomenon that takes place when a distribution circuit is re-energized following an extended outage of that circuit. It can result in current levels that are significantly higher than normal peak load levels. This excess amount of current draw could be falsely identified as an overcurrent condition by the relay. The cold-load pickup element identifies possible cold-load pickup events as per the settings in a distribution line after an outage. The logic provides Relay Word bits that can be used in programmable torque-control equations of the overcurrent element to enable new trip level settings for the cold-loading period.

Wye or Open-Delta Voltages

You can apply wye-connected (four-wire) voltages or open-delta-connected (three-wire) voltages to three-phase voltage inputs VA, VB, VC, and N, as shown in *Figure 5*. You only need to make a global setting change (DELTA_Y = WYE or DELTA_Y = DELTA) and an external wiring change—no internal relay hardware changes or adjustments are necessary. Thus, a single SEL-751 model meets all your distribution protection needs, regardless of available three-phase voltages.

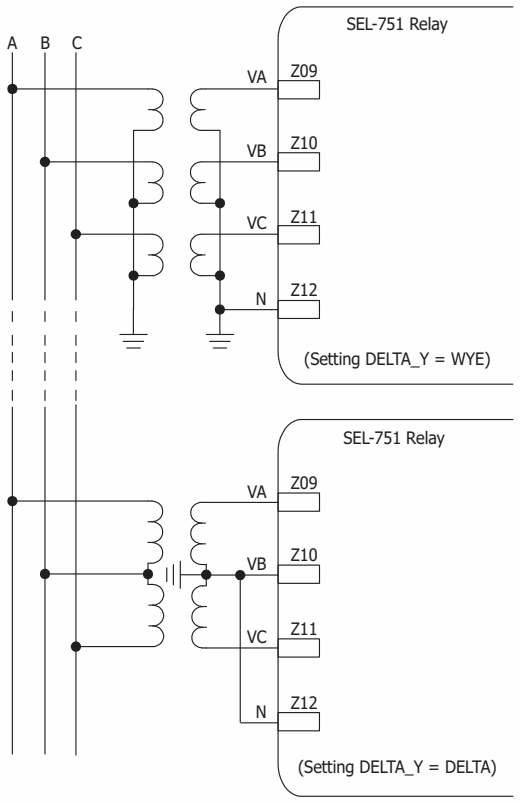

Figure 5 Connect Wye or Open-Delta Voltages to SEL-751 Three-Phase Voltage Inputs

Figure 6 shows the connections for a 3V0 broken delta input.

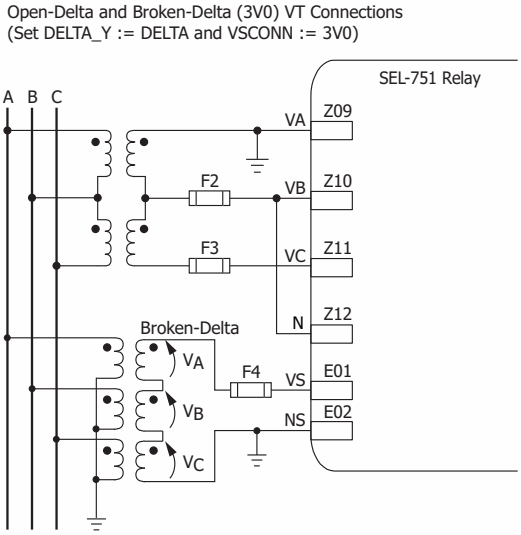

Figure 6 Broken-Delta Connections

In addition, the SEL-751 supports single voltage input. For customers with a single PT input, the SEL-751 assumes balanced voltage input for all protection and metering functions.

Loss-of-Potential Logic

The SEL-751 includes loss-of-potential (LOP) logic that detects one, two, or three blown potential fuses. This patented LOP logic is unique because it does not require settings and is universally applicable. The LOP feature allows the blocking of protection elements to add security during fuse failure.

Synchronism Check

When you order the Vsync, Vbat Voltage Input and 4 Arc-Flash Detection Inputs card (SELECT 2 AVI/4 AFDI), single-phase voltage (phase-to-neutral or phase-to-phase) is connected to voltage input VS/NS for synchronism check across a circuit breaker (or hot/dead line check). You can use synchronism-check voltage to coordinate reclosing with the optional recloser control.

Voltage and Frequency Elements for Extra Protection and Control

Over- and Undervoltage Elements

Phase-to-ground, phase-to-phase, negative-sequence, and residual overvoltage (59) and phase-to-ground or phase-to-phase undervoltage (27) elements in the SEL-751 can be used to create the following protection and control schemes.

- Trip/alarm or event report triggers for over- and undervoltage conditions.
- Undervoltage (27) load shedding scheme (having both 27 and 81U load shedding schemes allows detection of system MVAR- and MW-deficient conditions).

Inverse-Time Over- and Undervoltage Elements

Custom programmable, IEC equation-based inverse-time overvoltage (59I) and undervoltage (27I) elements in the SEL-751 add flexibility in voltage protection and control schemes.

Over- and Underfrequency Protection

Six levels of secure overfrequency (81O) or underfrequency (81U) elements detect true frequency disturbances. Use the independently time-delayed output of these elements to shed load or trip local generation. The SEL-751 uses the voltage input to make frequency measurements; it switches automatically to current input when voltages are insufficient.

Implement an internal multistage frequency trip/restore scheme at each breaker location using the multiple over- and underfrequency levels. This method avoids the cost of wiring a complicated trip and control scheme from a separate frequency relay.

Rate-of-Change-of-Frequency Protection

Four independent rate-of-change-of-frequency elements are provided with individual time delays for use when frequency changes occur (e.g., when there is a sudden unbalance between generation and load). The elements can call for control action or switching action such as network decoupling or load shedding. Each element includes logic to detect either increasing or decreasing frequency and above or below nominal frequency.

Fast Rate-of-Change-of-Frequency Protection for Aurora Vulnerability Mitigation

The fast rate-of-change-of-frequency protection, 81RF, provides a faster response compared to frequency (81) and rate-of-change-of-frequency (81R) elements. Fast operating speed makes the 81RF element suitable for detecting islanding conditions. The element uses a characteristic (see *Figure 7*) based on the frequency deviation from nominal frequency (DF = FREQ – FNOM) and the rate-of-change of frequency (DF3C) to detect islanding conditions.

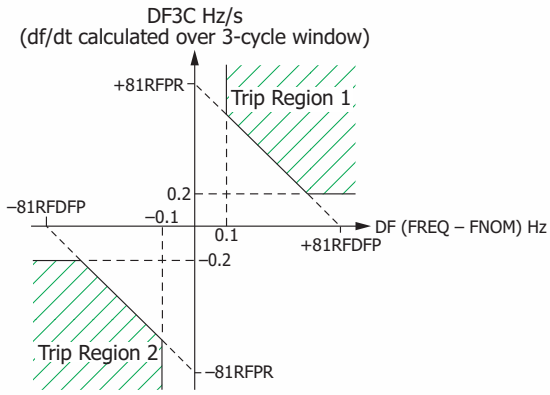

Figure 7 81RF Characteristic Power Element Protection

A time window of three cycles is used to calculate the value of DF3C. Under steady state conditions, the operating point is close to the origin. During islanding conditions, depending on the islanded system acceleration, the operating point enters Trip Region 1 or Trip Region 2 of the characteristic. 81RFDFP (in Hz) and 81RFRP (in Hz sec) are the settings used to configure the characteristic.

Vector Shift (78VS) Protection

When distributed generators (DG) are connected to a utility network, the vector shift (78VS) element is used to detect islanding conditions and trip the DG. Failure to trip islanded generators can lead to problems such as personnel safety, out-of-synchronization reclosing, and degradation of power quality. Based on the change in the angle of the voltage waveform, the islanding condition can be detected by the vector shift function.

Use the vector shift element with the 81RF element as a backup for fast and secure islanding detection. The vector shift element operates within three cycles, which is fast enough to prevent reclosing out-of-synchronism with the network feeders to avoid generator damage.

Harmonic Blocking Elements Secure Protection During Transformer Energization

Transformer inrush can cause sensitive protection to operate. Use the second- and fifth-harmonic blocking feature to detect an inrush condition and block selected tripping elements until the inrush subsides. Select the blocking threshold as a percentage of fundamental current, and optimize security and dependability with settable pickup and dropout times. Use the programmable torque control equation only to enable the blocking element immediately after closing the breaker.

Power Element Protection

The SEL-751 provides two power elements for detecting real (watts) or reactive (VARS) positive- or negative-power flow levels for the feeder application. Each power element has a definite-time delay setting.

High-Impedance Fault (HIF) Detection

High-impedance faults are short-circuit faults with fault currents smaller than what a traditional overcurrent protective relay can detect. The main causes of HIFs are tree branches touching a phase conductor; dirty or failing insulators that cause flashovers between a phase conductor and the ground; or downed conductors touching the ground. The SEL-751 with the Arc Sense™ technology (AST) option includes logic that can detect HIF signatures without being affected by loads or other system operation conditions. A running average provides a stable prefault reference, and adaptive tuning learns and tunes out feeder ambient noise conditions. Decision logic differentiates an HIF condition from other system conditions such as switching operations and noisy loads. The relay stores as many as 20 minutes of HIF activity in 2-cycle resolution Compressed ASCII and COMTRADE formats and it stores a summary of HIF activity that you can access through the use of ASCII commands.

Phase Discontinuity Detection (PDD) Element

The PDD element uses current unbalance to detect an open conductor. The PDD logic detects a phase discontinuity only for cases that result in an open-phase condition for a minimum of eight power system cycles.

Broken Conductor Detection (BCD) Element

The BCD algorithm is only available for SEL-751 models with the Arc Sense technology (AST) option included. BCD uses the charging current of the line to reliably detect and estimate the location of broken conductors. It can be used to trip the breakers before the conductor touches the ground and creates a shunt fault. Thus, the algorithm can prevent such faults and block any attempt to reclose the line. The BCD function is designed for single-conductor line configurations and can help in mitigating a possible fire or other public hazard.

Arc-Flash Protection

An arcing short circuit or a ground fault in low- or medium-voltage switchgear can cause serious equipment damage and personal injury, resulting in prolonged and expensive downtime.

The best way to minimize the impact of an arc-flash event is to reduce the detection and circuit breaker tripping times. Conventional protection may need several cycles to detect the resulting overcurrent fault and trip the breaker. In some cases, there may not be sufficient current to detect an overcurrent fault. Tripping may be delayed hundreds of milliseconds for sensitivity and selectivity reasons in some applications.

The arc-flash detection-based (AFD) protection can act on the circuit breaker in a few milliseconds (2–5 ms). This fast response can limit the arc-flash energy, thus preventing injury to personnel and limiting or eliminating equipment damage.

The arc-flash protection option in the SEL-751 adds four- or eight-channel fiber-optic AFD inputs and protection elements. Each channel has a fiber-optic receiver and an LED-sourced fiber-optic transmitter that continuously self-tests and monitors the optical circuit to detect and alarm for any malfunction. There are two types of applications supported by the SEL-751: point sensor applications and fiber sensor applications.

Point Sensor Application

The arc is detected by transmitting the arc-flash light captured by the optical diffuser (located appropriately in the switchgear) over a 1000 µm plastic fiber-optic cable to the optical detector in the relay. The relay performs sensor loopback tests on the optical system using an LED-based transmitter to transmit light pulses at regular intervals to the point-sensor assembly (through a second fiber-optic cable). If the relay optical receiver does not detect this light, the relay declares a malfunction and alarms. *Figure 8* (top) shows a diagram for the point sensor application.

Fiber Sensor Application

Fiber sensor AFD uses a clear-jacketed 1000 µm plastic fiber-optic cable located in the switchgear equipment. One end of the fiber is connected to the optical detector in the relay and the other end is connected to the LED transmitter in the relay. The LED transmitter injects periodic light pulses into the fiber as a sensor loopback test to verify the integrity of the loop. The relay detects and alarms for any malfunction. *Figure 8* (bottom) shows a diagram for the clear-jacketed fiber sensor application.

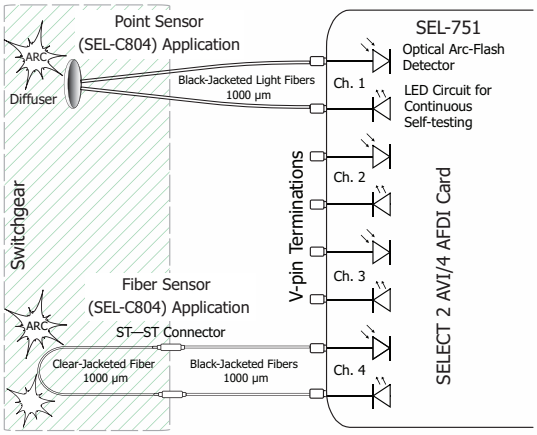

Figure 8 SEL-751 Arc-Flash Detection System

The SEL-751 AFD system provides four or eight channels per relay that can be configured for the point sensor or the clear-jacketed fiber sensor applications. The optional fast hybrid outputs (high-speed and high-current) of the relay provide fast-acting trip outputs to the circuit breaker (less than 50 µs). The fast breaker tripping can prevent serious damage or personal injury in case of an arc-flash event. The relay also provides light metering and light event capture to aid in setting the relay and capturing the arc-flash event for records and analysis.

Settable arc-flash phase and neutral overcurrent elements are combined with arc-flash light detection elements to provide secure, reliable, and fast acting arc-flash event protection.

RTD Thermal Protection

When the SEL-751 is equipped with either an optional 10 RTD input expansion card or an external SEL-2600 RTD Module with as many as 12 RTD inputs, you can program as many as 12 thermal elements in the relay for two levels

of thermal protection per element. Each RTD input provides an alarm and trip thermal pickup setting in degrees Celsius, open and shorted RTD detection, and is compatible with the following three-wire RTD types:

- PT100 (100 Ω platinum)
- NI100 (100 Ω nickel)
- NI120 (120 Ω nickel)
- CU10 (10 Ω copper)

Operator Controls and Reclosing

Operator controls eliminate traditional panel control switches. Four or eight conveniently sized operator controls, each with two programmable tricolor LEDs, are located on the relay front panel (see *Figure 9*). You can set the SER to track operator controls. Use SELOGIC control equations to change operator control functions. Use configurable labels to change all of the text shown in *Figure 9*.

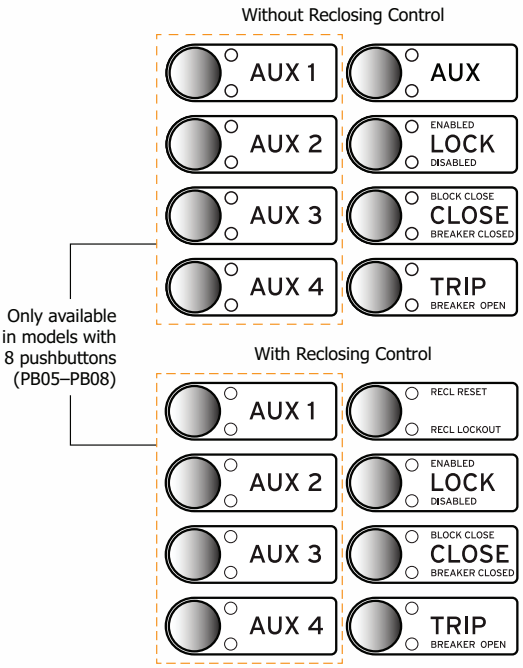

Figure 9 Operator Controls for Standard Model and Optional Reclosing Control Model

In the non-reclosing control SEL-751, you can program the top right operator control and its corresponding two LEDs. When the SEL-751 is ordered with optional reclosing, the two LEDs are programmed to give the status of the reclosing. The two LEDs, **RECL RESET** and **RECL LOCKOUT**, indicate whether the recloser is in the Reset or Lockout state.

The following operator control descriptions are for factory-set logic.

LOCK: The **LOCK** operator control blocks selected functions. Press it for at least three seconds to engage or disengage the lock function. When the **LOCK** pushbutton is engaged, the **TRIP** and **CLOSE** operators are blocked.

CLOSE and **TRIP:** Use the **CLOSE** and **TRIP** operator controls to close and open the circuit breaker. You can program these controls with intentional time delays to support operational requirements for breaker-mounted relays. This allows you to press the **CLOSE** or **TRIP** pushbutton, then move to an alternate location before the breaker command is executed.

AUXn: You can program the **AUXn** (*n* = 1, 2, 3, or 4) pushbuttons for additional control of your specific application.

In the SEL-751 with the touchscreen display, you can use the front-panel operator control pushbuttons to jump to a specific screen while also using them for LOCK/TRIP/CLOSE operations, etc. You can program the selectable operator pushbutton screen settings under the Touchscreen settings category in QuickSet to map the button to the specific screen.

Programmable Autoreclosing

When ordered with optional reclosing, the SEL-751 can autoreclose a circuit breaker as many as four times before lockout. Use SELOGIC control equations to program the SEL-751 to perform the following reclosing functions.

- Allow closing, e.g., when the load-side line is dead, or when the two systems are in synchronism (optional).
- Advance the shot counter without tripping, e.g., when another protective relay clears a fault, also known as sequence coordination.
- Initiate reclosing, e.g., for particular protection trip operations.
- Drive-to-lockout, e.g., when an optoisolated input is deasserted.

- Delay reclosing, e.g., after a trip caused by a close-in, high-current fault.
- Flexible reclose supervision failure scheme that allows going to lockout or moving to the next available shot.

The reclosing shot counter controls which protective elements are involved in each reclose interval. Applications include fuse- and trip-saving schemes. The front-panel LEDs (**RECL RESET** and **RECL LOCKOUT**) track the reclosing state.

Built-In Web Server

Every Ethernet-equipped SEL-751 includes a built-in web server. Interface with the relay by using any standard web browser to perform the following actions:

- Log in with password protection.
- Safely read the relay settings.
- Verify the relay self-test status and view the relay configuration.
- Inspect meter reports.
- Download SER and event reports.
- Upload new firmware (firmware upgrade).

Figure 10 shows the fundamental metering screen that can be accessed by clicking **Meter > Fundamental**. Use the Meter menu to view all the available relay metering statistics.

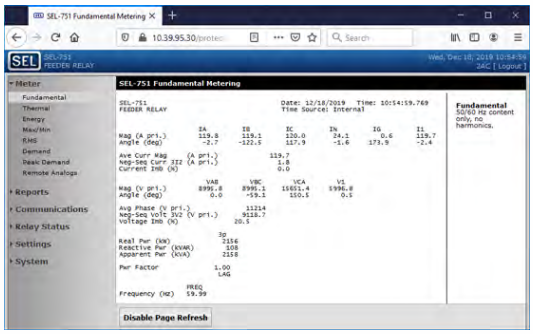

Figure 10 Fundamental Meter Report Webpage

Figure 11 shows the Group 1 settings webpage. You can view the settings of each relay settings class by selecting **Settings** and the respective relay settings class.

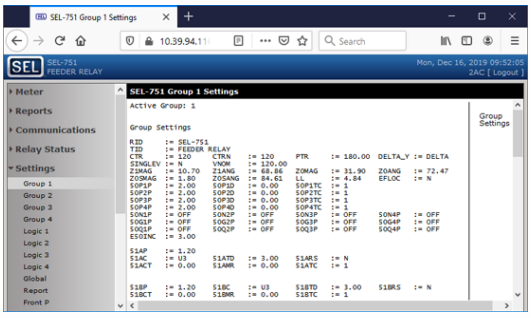

Figure 11 Group 1 Settings Webpage

You can upgrade the relay firmware through the relay web server by clicking **System > File Management** (available at Access Level 2) and selecting the firmware upgrade file. *Figure 12* shows the firmware upgrade webpage.

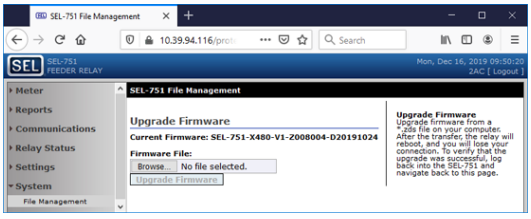

Figure 12 Upgrade the Relay Firmware From the File Management Webpage

Relay and Logic Settings Software

QuickSet simplifies settings and provides analytical support for the SEL-751. There are several ways to create and manage relay settings with QuickSet.

- Develop settings offline with an intelligent settings editor that only allows valid settings.
- Create SELOGIC control equations with a drag-and-drop text editor.
- Configure proper settings using online help.
- Organize settings with the relay database manager.
- Load and retrieve settings using a simple PC communications link.

With QuickSet, you can verify settings and analyze power system events with the integrated waveform and harmonic analysis tools.

Use the following features of QuickSet to monitor, commission, and test the SEL-751.

- Use the HMI to monitor meter data, Relay Word bits, and output contact statuses during testing.
- Use the PC interface to remotely retrieve power system data.

- Use the Event Report Analysis tool for easy retrieval and visualization of ac waveforms and digital inputs and outputs the relay processes.
- Use the graphical current phasor display in the HMI to visualize differential current relationships.
- Use bay control to design new bay screens and edit existing bay screens by launching ACSELERATOR Bay Screen Builder SEL-5036 Software for SEL-751 relays with the touchscreen display.

ACSELERATOR Bay Screen Builder SEL-5036 Software

The SEL-751 with the touchscreen display option provides you with the ability to design bay configuration screens to meet your system needs. You can display the bay configuration as a single-line diagram (SLD) on the touchscreen. You can use ANSI and IEC symbols, along with analog and digital labels, for the SLD to indicate the status of the breaker and disconnects, bus voltages, and power flow through the breaker. In addition to SLDs, you can design the screens to show the status of various relay elements via Relay Word bits or to show analog quantities for commissioning or day-to-day operations. You can design these screens with the help of Bay Screen Builder in conjunction with QuickSet. Bay Screen Builder provides an intuitive and powerful interface to design bay screens to meet your application needs.

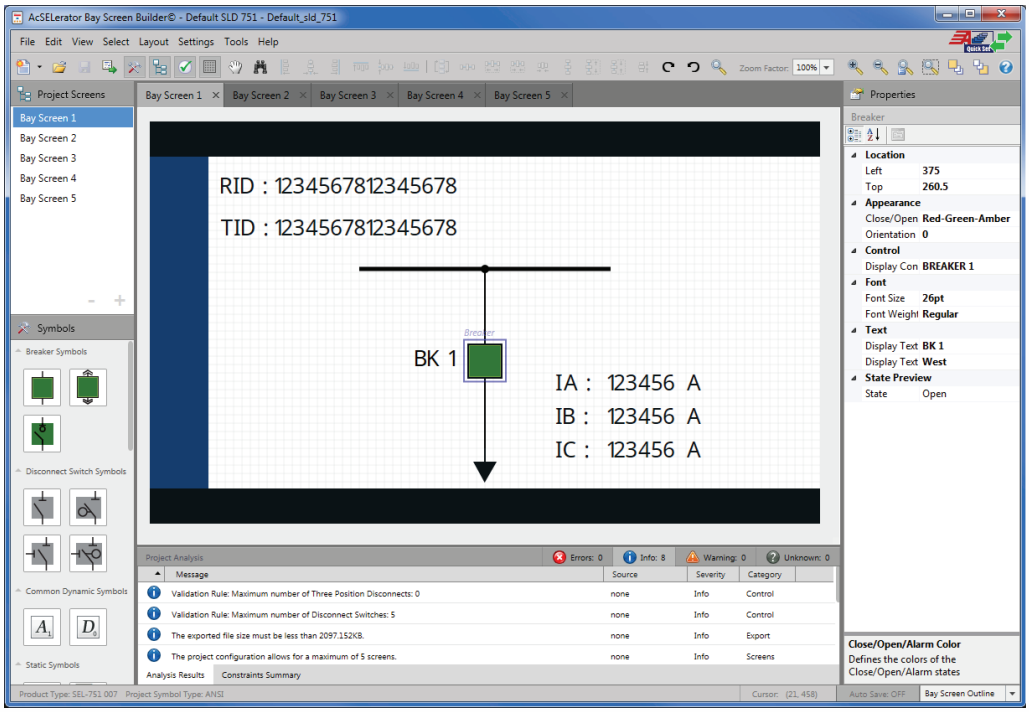

Figure 13 Bay Screen Builder

Metering and Monitoring

The SEL-751 provides extensive metering capabilities. See *Specifications on page 34* for metering and power measurement accuracies. As shown in *Table 5*, metered quantities include phase voltages and currents; neutral current, sequence voltages and currents; power, frequency, and energy; and maximum/minimum logging of selected quantities. The relay reports all metered quantities in primary quantities (current in A primary and voltage in V primary).

Table 5 SEL-751 Metered Values (Model Dependent)

Types of Metering			
Instantaneous	Light	Analog Inputs	Energy
Math Variables	RMS	Remote Analogs	Thermal
Demand and Peak Demand	Synchrophasors	Max/Min	HIF (High-Impedance Fault)

Quantities	Description
Currents IA, IB, IC	Phase current magnitude and angle, primary A
IN	Neutral current magnitude and angle, primary A
IG	Residual-ground fault current and angle, primary A (IG = 3I0 = IA + IB + IC)
Currents IAV, UBI	Average current magnitude, current unbalance
Voltages VA, VB, VC	Phase voltage and angles, primary volts, for wye-connected voltage inputs
Voltages VAB, VBC, VCA	Phase-to-phase voltages and angles, primary volts, for delta-connected voltage inputs
Voltages VAVE, UBV	Average voltage magnitude, voltage unbalance
Voltage VS	Synchronism-check voltage magnitude and angle, primary volts
Power kVA, kW, kVAR[a]	Calculated apparent, real, and reactive power scales to primary values (single and three-phase)
Energy MWh, MVARh, MVAh	Three-phase positive and negative megawatt-hours, megavar-hours, and megavolt-amp-hours
Power Factor PF[a]	Single and three-phase power factor (leading or lagging)
Sequence I1, 3I2, 3I0, V1, 3V2, 3V0	Positive-, negative-, and zero-sequence currents and voltages
Voltage VDC	Station battery voltage
Frequency FREQ	Instantaneous system frequency (Hz)
Frequency FREQS	Instantaneous frequency (Hz) of synchronism-check voltage channel
Light Intensity (%) LS1–LS8	Arc-flash light inputs in percentage of full scale
AIx01–AIx08 (*x* = 3, 4, or 5)	Analog inputs
MV01–MV64	Math variables
RA001–RA128	Remote analogs
Thermal Element *x* Current THIEQ*x* pu TCU THTCU*x*% Trip Time THTRIP*x* s Release Time THRLS*x* s	Element *x* pu current level, thermal capacity, time to trip, and time to reset values, where *x* = 1, 2, or 3
RTD1–RTD12	RTD temperature measurement (degrees C)

[a] Single-phase power and power factor quantities are not available when delta-connected PTs are used.

Load Profile

The SEL-751 features a programmable Load Data Profile (LDP) recorder that records as many as 17 metering quantities into nonvolatile memory at fixed time intervals. The LDP saves several days to several weeks of the most recent data depending on the LDP settings (6500 entries total).

Synchrophasor Measurements

Combine the SEL-751 with an SEL-IRIG-B time source to measure the system angle in real time with a timing accuracy of ±10 µs. Measure instantaneous voltage and current phase angles in real time to improve system operation with synchrophasor information. Replace state measurement, study validation, or track system stability. Use SEL-5703 Synchrowave Monitoring software to view system angles at multiple locations for precise system analysis and system-state measurement (see *Figure 14*).

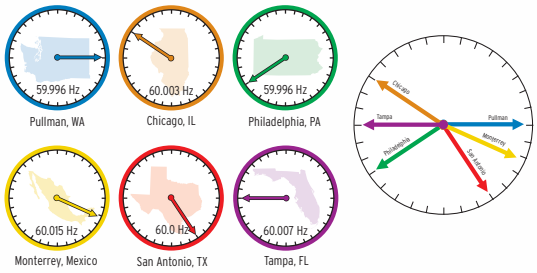

View system angle at multiple locations.

Figure 14 View of System Angle at Multiple Locations

Use IEEE C37.118-2005 protocol to send synchrophasor data to SEL synchrophasor applications. These include the SEL-3378 Synchrophasor Vector Processor (SVP), SEL-3530 Real-Time Automation Controller (RTAC), and the SEL-5078-2 SYNCHROWAVE® Central Visualization and Analysis Software suite.

The SEL-3373 Station Phasor Data Concentrator (PDC) and the SEL-5073 SYNCHROWAVE PDC software correlate data from multiple SEL-751 relays and concentrate

the result into a single output data stream. These products also provide synchrophasor data archiving capability. The SEL-3378 SVP enables control applications based on synchrophasors. Directly measure the oscillation modes of your power system and then act on the result. Use wide-area phase angle slip and acceleration measurements to properly control islanding of distributed generation. With the SVP, you can customize a synchrophasor control application according to the unique requirements of your power system.

The data rate of SEL-751 synchrophasors is selectable with a range of 1–60 messages per second. This flexibility is important for efficient use of communication capacity.

The SEL-751 phasor measurement accuracy meets the highest IEEE C37.118-2005 Level 1 requirement of 1 percent total vector error (TVE). This means you can use any SEL-751 model in an application that otherwise would require purchasing a separate dedicated phasor measurement unit (PMU).

Use the SEL-751 with SEL communications processors or RTACs to change nonlinear state estimation into linear state estimation. If all necessary lines include synchrophasor measurements then state estimation is no longer necessary. The system state is directly measured.

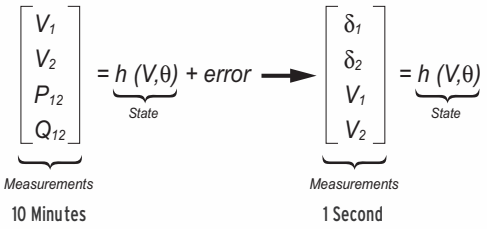

Figure 15 Synchrophasor Measurements Turn State Estimation Into State Measurement

Improve Situational Awareness

Provide improved information to system operators. Advanced synchrophasor-based tools produce a real-time view of system conditions. Use system trends, alarm points, and preprogrammed responses to help operators prevent a cascading system collapse and maximize system stability. Awareness of system trends provides operators with an understanding of future values based on measured data.

- Increase system loading while maintaining adequate stability margins.
- Improve operator response to system contingencies such as overload conditions, transmission outages, or generator shutdown.
- Advance system knowledge with correlated event reporting and real-time system visualization.
- Validate planning studies to improve system load balance and station optimization.

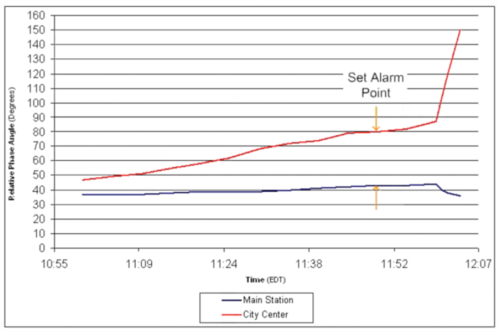

Figure 16 Visualization of Phase Angle Measurements Across a Power System

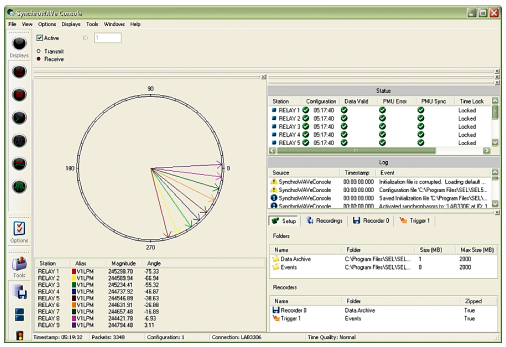

Figure 17 SEL-5078 SYNCHROWAVE Console Real-Time, Wide-Area Visualization Tool

Event Reporting and SER

Event reports and the SER simplify post-fault analysis and improve understanding of simple and complex protective scheme operations. In response to a user-selected trigger, the voltage, current, frequency, and element status information contained in each event report confirms relay, scheme, and system performance for every fault. Decide how much detail is necessary when you request an event report (e.g., 1/4-cycle or 1/32-cycle resolution, filtered or raw analog data, respectively).

The relay stores as many as 8 of the most recent 180-cycle event reports, 21 of the most recent 64-cycle event reports, or 44 of the most recent 15-cycle event reports in nonvolatile memory. The relay always appends relay settings to the bottom of each event report.

The following analog data formats are available:

- 1/4-cycle or 1/32-cycle resolution, filtered or unfiltered analog, ASCII or Compressed ASCII reports
- 1/32-cycle resolution COMTRADE reports

The relay SER feature stores the latest 1,024 entries. Use this feature to gain a broad perspective at a glance. An SER entry helps to monitor input/output change-of-state occurrences and element pickup/dropout.

Synchronized Measurements

The IRIG-B time-code input synchronizes the SEL-751 internal clock time to within ±1 µs of the time-source input. Convenient sources for this time code are an SEL-2401 Satellite-Synchronized Clock, an SEL communications processor, or an SEL RTAC (via Serial Port 2 or 3 on the SEL-751). For time accuracy specifications for metering, synchrophasors, and events, see *Specifications*.

Substation Battery Monitor

The SEL-751 relays that include the enhanced voltage option with the monitoring package measure and report the substation battery voltage connected to the VBAT terminals. The relay includes two programmable threshold comparators and associated logic for alarm and control. For example, if the battery charger fails, the measured dc falls below a programmable threshold. The SEL-751 alarms to alert operations personnel before the substation battery voltage falls to unacceptable levels. Monitor these thresholds with an SEL communications processor and trigger messages, telephone calls, or other actions.

The measured dc voltage appears in the meter display and the Vdc column of the event report. Use the event report column data to see an oscillographic display of the battery voltage. This display shows how much the substation battery voltage drops during trip, close, and other control operations.

Circuit Breaker Contact Wear Monitor

Circuit breakers experience mechanical and electrical wear every time they operate. Intelligent scheduling of breaker maintenance takes into account a manufacturer's published data of contact wear versus interruption levels and operation count. With the breaker manufacturer's maintenance curve as input data, the SEL-751 breaker monitor feature compares this input data to the measured (unfiltered) ac current at the time of a trip and the number of close-to-open operations.

Every time the breaker trips, the relay integrates the measured current information. When the result of this integration exceeds the breaker wear curve threshold (see *Figure 18*), the relay alarms via output contact, communications port, or front-panel display. This kind of information allows timely and economical scheduling of breaker maintenance.

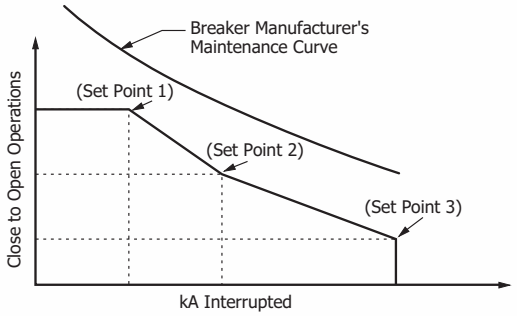

Figure 18 Breaker Contact Wear Curve and Settings

The relay also provides analog quantities that calculate the mechanical operate and close time for the circuit breaker. The operate and close time Relay Word bits can also be accessed via SELOGIC, HMI, display point, Fast Meter, Modbus, DNP3, EtherNet/IP, or IEC 61850.

Fault Locator

The SEL-751 provides a valuable estimate of fault location even during periods of substantial load flow. The fault locator uses fault type, replica line impedance settings, and fault conditions to calculate fault location. This feature, which operates without the use of communications channels, special instrument transformers, or prefault information, contributes to efficient dispatch of line crews and fast restoration of service. The fault locator uses three-phase voltage inputs. Wye-connected voltages are necessary for phase and ground fault distance calculations.

Only phase fault distance calculations are available with delta-connected voltages. The fault locator is unavailable in the absence of voltage or single-phase voltage connections.

IEC 61850 Test Mode

Test Mode allows you to test an in-service relay without operating control output contacts. Test Mode includes five different modes.

On: In On mode, the relay operates as normal; it reports IEC 61850 Mode/Behavior status as On and processes all inputs and outputs as normal. If the quality of the subscribed GOOSE messages satisfies the GOOSE processing, the relay processes the received GOOSE messages as valid.

Blocked: This mode is similar to On mode, except that the device does not trip any physical contact outputs.

Test: In Test mode, the relay processes valid incoming test signals and normal messages and operates physical contact outputs, if the outputs are triggered.

Test/Blocked: This is similar to Test mode, except that the device does not trip any physical contact outputs.

Off: The device does not process any incoming data or control commands (except commands to change the mode). All protection logic is disabled and all data quality is marked as invalid.

Simulation: In this mode, the relay continues to process normal GOOSE messages until a simulated GOOSE message is received for a subscription. Once a simulated GOOSE message is received, only simulated GOOSE messages are processed for that subscription. The simulated mode only terminates when LPHDSIM is returned to FALSE. When the relay is not in simulation mode, only normal GOOSE messages are processed for all subscriptions.

Touchscreen Display

You can order the SEL-751 Feeder Protection Relay with an optional touchscreen display (5-inch, color, 800 x 480 pixels). The touchscreen display makes relay data metering, monitoring, and control quick and efficient. The touchscreen display option in the SEL-751 features a straightforward application-driven control structure and includes intuitive and graphical screen designs.

The touchscreen display allows you to:

- View and control bay screens
- Access metering and monitoring data
- Inspect targets
- View event history, summary data, and SER information
- View relay status and configuration
- Control relay operations
- View and edit settings
- Enable the rotating display
- Program control pushbuttons to jump to a specific screen

You can navigate the touchscreen by tapping the folders and applications. The folders and applications of the **Home** screen are shown in *Figure 19*. Folders and applications are labeled according to functionality. Additional folder and application screens for the SEL-751 touchscreen display option can be seen in *Figure 20* through *Figure 28*.

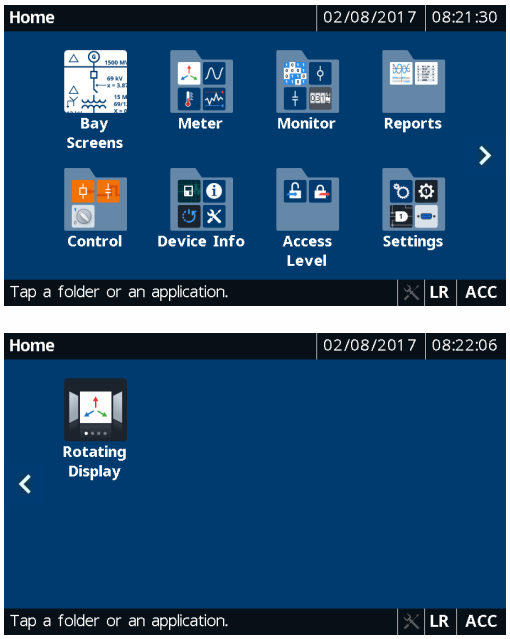

Figure 19 Home (Default FPHOME Screen)

Bay Screens Application

The SEL-751 with the touchscreen display option provides you with the ability to design bay configuration screens to meet your system needs. The bay configuration can be displayed as an SLD on the touchscreen. You can create as many as five bay screens with one controllable breaker, eight controllable two-position disconnects, and two controllable three-position disconnects. ANSI and IEC symbols, along with analog and digital labels, are available for you to create detailed SLDs of the bay to indicate the status of the breaker and disconnects, bus voltages, and power flow through the breaker. *Figure 20* shows the default SLD for the touchscreen display option.

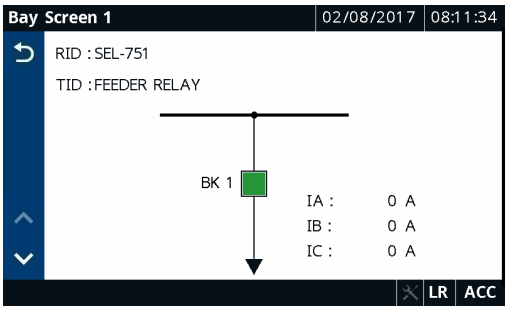

Figure 20 Default Bay Screen

Meter Folder Applications

The applications in the Meter folder are part-number dependent. Only those metering applications specific to your part number appear in the Meter folder. Tapping an application in the Meter folder shows you the report for that particular application. Tap the **Phasor** application to view the current and voltage phasors (see *Figure 21*).

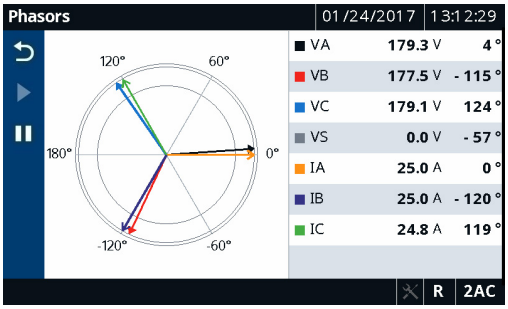

Figure 21 Meter Phasors

Tap the **Energy** application to view the energy metering quantities (see *Figure 22*). A reset feature is provided for the Energy, Max/Min, Demand, and Peak Demand applications. Tap the **Reset** button (see *Figure 22*) to navigate to the reset confirmation screen. Once you confirm the reset, the data are reset to zero.

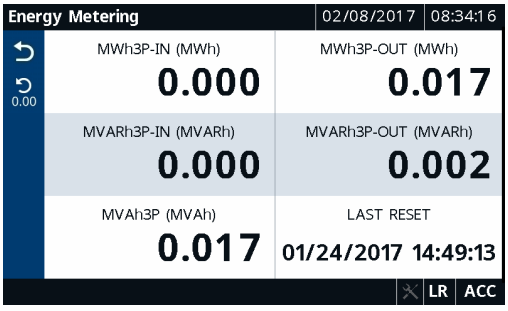

Figure 22 Meter Energy

Reports Folder Applications

Tapping the **Reports** folder navigates you to the screen where you can access the Events, HIF Events (if available), and SER applications. Use these applications to view events and SERs. To view the event summary (see *Figure 23*) of a particular event record, tap the event record on the Event History screen (for Events and HIF Events). You can also trigger an event report from the Event History screen.

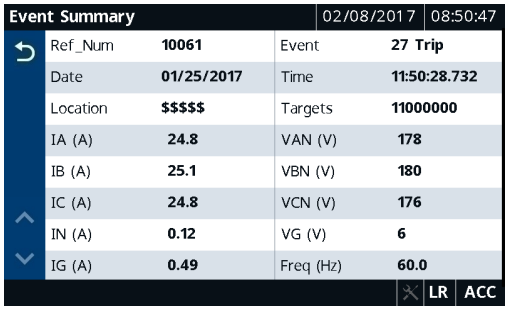

Figure 23 Event Summary

Tap the **Sequential Events Recorder** application to view a history of the SER reports (see *Figure 24*).

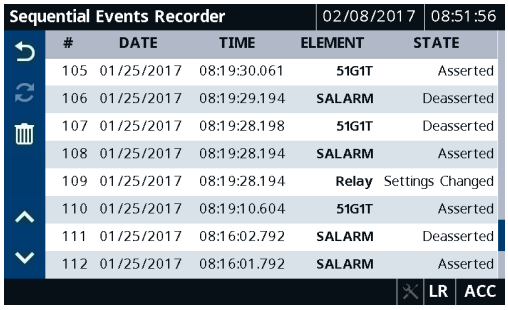

Figure 24 Sequential Events Recorder

Tapping the **Trash** button, shown in *Figure 23*, on the Event History, HIF Event History, and Sequential Events Recorder screens and confirming the delete action removes the records from the relay.

Control Folder Applications

Tapping the **Control** folder navigates you to the screen where you can access the Breaker Control, Output Pulsing, and Local Bits applications. Use the applications to perform breaker control operations, pulse output contacts (*Figure 25*), and control the local bits (*Figure 26*).

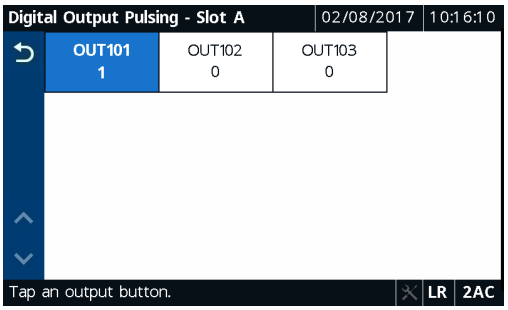

Figure 25 Digital Output Pulsing-Slot A

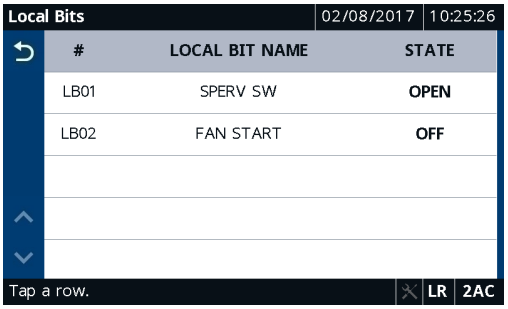

Figure 26 Local Bits

Device Info Folder Applications

Tapping the **Device Info** folder navigates you to the screen where you can access specific device information applications (Status, Configuration, Arc-Flash Diagnostics, and Trip & Diag. Messages) and the Reboot application. Tap the **Status** application to view the relay status, firmware version, part number, etc. (see *Figure 27*).

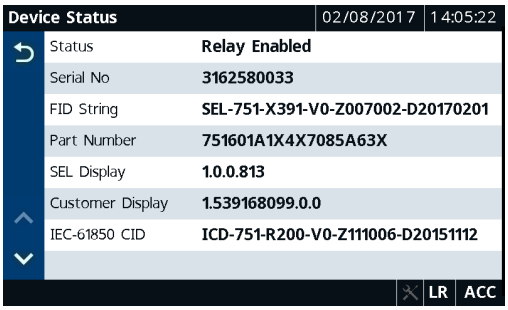

Figure 27 Device Status

To view the trip and diagnostic messages, tap the **Trip & Diag. Messages** application (see *Figure 28*). When a diagnostic failure, trip, or warning occurs, the relay displays the diagnostic message on the screen until it is either overridden by the restart of the rotating display or the inactivity timer expires.

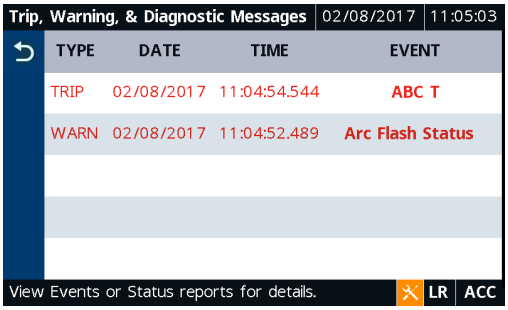

Figure 28 Trip and Diagnostics

Automation

Flexible Control Logic and Integration Features

The SEL-751 can be ordered with as many as four independently operated serial ports:

- EIA-232 port on the front panel
- EIA-232 or EIA-485 port on the Slot B card in the rear
- EIA-232 fiber-optic port on the Slot B card in the rear
- EIA-232 or EIA-485 port on the optional communications card in Slot C in the rear

Optionally, the relay supports single or dual, copper or fiber-optic Ethernet ports. The relay does not require special communications software. You can use any system that emulates a standard terminal system for engineering access to the relay. Establish local or remote communication by connecting computers, modems, protocol converters, printers, an SEL RTAC, SEL communications processor, SEL computing platform, SCADA serial port, or RTUs. Refer to *Table 6* for a list of communications protocols available in the SEL-751.

Table 6 Communications Protocols

Type	Description
Simple ASCII	Plain language commands for human and simple machine communications. Use for metering, setting, self-test status, event reporting, and other functions.
Compressed ASCII	Comma-delimited ASCII data reports. Allows external devices to obtain relay data in an appropriate format for direct import into spreadsheets and database programs. Data are checksum protected.
Extended Fast Meter and Fast Operate	Binary protocol for machine-to-machine communications. Quickly updates SEL communications processors, RTUs, and other substation devices with metering information, relay elements, I/O status, time-tags, open and close commands, and summary event reports. Data are checksum protected. Binary and ASCII protocols operate simultaneously over the same communications lines, so control operator metering information is not lost while a technician is transferring an event report.
Fast SER Protocol	Provides SER events to an automated data collection system.
DNP3	Serial or Ethernet-based DNP3 protocols. Provides default and mappable DNP3 objects that include access to metering data, protection elements, Relay Word bits, contact I/O, targets, SER, relay summary event reports, and setting group selection.
Modbus	Serial- or Ethernet-based Modbus protocol with point remapping. Includes access to metering data, protection elements, contact I/O, targets, SER, relay summary event reports, and setting groups.
IEC 61850 Edition 2	Ethernet-based international standard for interoperability between intelligent devices in a substation. Operates remote bits and I/O. Monitors Relay Word bits and analog quantities. Supports Fixed GOOSE peer-to-peer communication with eight setting selectable analog quantities and Relay Word bits.
Synchrophasors	IEEE C37.118-2005-compliant synchrophasors for system state, response, and control capabilities.
Event Messenger	The use of SEL-3010 Event Messenger allows you to receive alerts directly on your cell phone. Alerts can be triggered through relay events and can include quantities measured by the relay.
DeviceNet	Allows for connection to a DeviceNet network for access to metering data, protection elements, contact I/O, targets, and setting groups. (The DeviceNet option has been discontinued and is no longer available to order as of September 25, 2017.)
SNTP	Ethernet-based protocol that provides time synchronization of the relay.
IEEE 1588-2008 firmware-based PTP	Ethernet-based protocol that provides time synchronization of the relay.
PRP	Provides seamless recovery from any single Ethernet network failure in a dual redundant Ethernet network, in accordance with IEC 62439-3.
RSTP	Provides faster recovery in response to changes and failures in switched mode dual redundant Ethernet networks in accordance with IEEE 802.1Q-2014.
IEC 60870-5-103	Serial communications protocol—international standard for interoperability between intelligent devices in a substation.
EtherNet/IP	Ethernet-based protocol that provides access to metering data, protection elements, targets, and contact I/O.

Apply an SEL communications processor as the hub of a star network with a point-to-point fiber or copper connection between the hub and the SEL-751 (see *Figure 29*).

The communications processor supports external communications links, including the public switched telephone network, for engineering access to dial-out alerts and private line connections of the SCADA system.

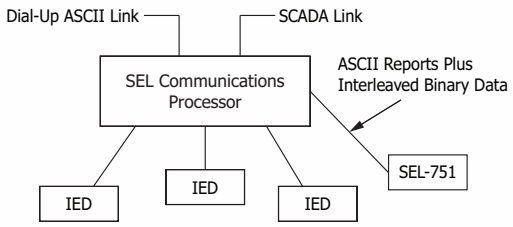

Figure 29 Example Communications System

SEL manufactures a variety of standard cables for connecting this and other relays to a variety of external devices. Consult your SEL representative for more information on cable availability.

SEL-751 control logic improves integration in the following ways.

- **Replaces traditional panel control switches.** Eliminate traditional panel control switches with 32 local bits. Set, clear, or pulse local bits with the front-panel pushbuttons and display. Program the local bits into your control scheme with SELOGIC control equations. Use the local bits to perform functions such as a trip test or a breaker trip/close.
- **Eliminates RTU-to-relay wiring with 64 remote bits.** Set, clear, or pulse remote bits using serial port commands. Program the remote bits into your control scheme with SELOGIC control equations. Use remote bits for SCADA-type control operations such as trip, close, and settings group selection.
- **Replaces traditional latching relays.** Replace as many as 64 traditional latching relays for such functions as remote control enable with latch bits. Program latch set and latch reset conditions with SELOGIC control equations. Set or reset the nonvolatile latch bits using optoisolated inputs, remote bits, local bits, or any programmable logic condition. The latch bits retain their state when the relay loses power.
- **Replaces traditional indicating panel lights.** Replace traditional indicating panel lights with 32 programmable displays. Define custom messages (e.g., `Breaker Open`, `Breaker Closed`) to report power system or relay conditions on the front-panel display. Use advanced SELOGIC control equations to control which messages the relay displays.
- **Eliminates external timers.** Eliminate external timers for custom protection or control schemes with 64 general purpose SELOGIC control equation timers. Each timer has independent time-delay pickup and dropout settings. Program each timer input with the element you want (e.g., time qualify a current element). Assign the timer output to trip logic, transfer trip communications, or other control scheme logic.
- **Eliminates setting changes.** Selectable setting groups make the SEL-751 ideal for applications requiring frequent setting changes and for adapting the protection to changing system conditions. The relay stores four setting groups. Select the active setting group by optoisolated input, command, or other programmable conditions. Use these setting groups to cover a wide range of protection and control contingencies. Switching setting groups switches logic and relay element settings. Program groups for different operating conditions, such as feeder paralleling, station maintenance, seasonal operations, emergency contingencies, loading, source changes, and downstream relay setting changes.

Fast SER Protocol

SEL Fast SER provides SER events to an automated data collection system. SEL Fast SER protocol is available on any rear serial port. Devices with embedded processing capability can use these messages to enable and accept unsolicited binary SER messages from SEL-751 relays.

SEL relays and communications processors have two separate data streams that share the same serial port. The normal serial interface consists of ASCII character commands and reports that are intelligible to people using a terminal or terminal emulation package. The binary data streams can interrupt the ASCII data stream to obtain information, and then allow the ASCII data stream to continue. This mechanism allows a single communications channel to be used for ASCII communications (e.g., transmission of a long event report) interleaved with short bursts of binary data to support fast acquisition of metering or SER data.

Ethernet Network Architectures

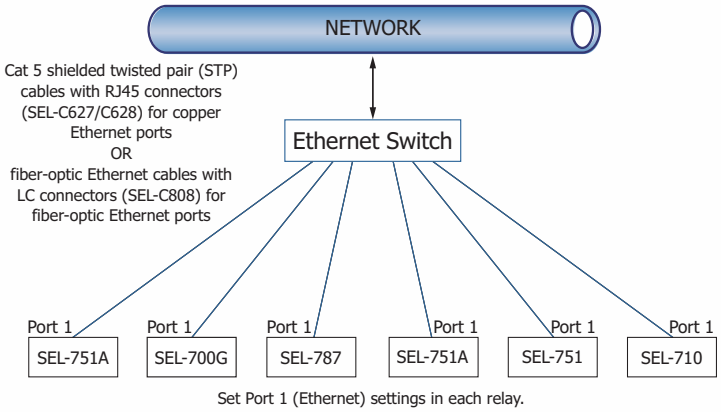

Figure 30 Simple Ethernet Network Configuration

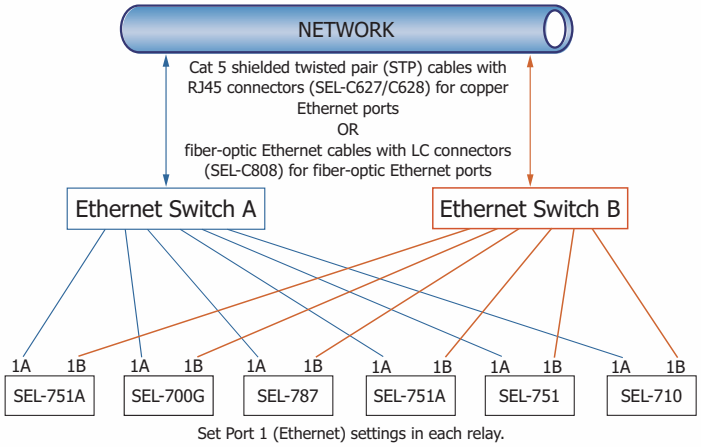

Figure 31 Ethernet Network Configuration With Dual Redundant Connections (Failover Mode)

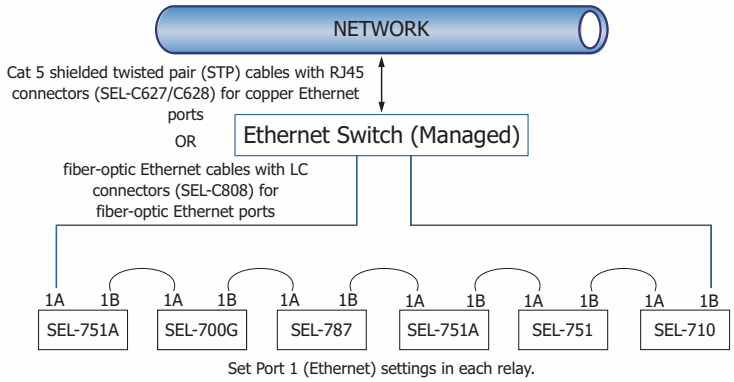

Figure 32 Ethernet Network Configuration With Ring Structure (Switched Mode)

Additional Features

MIRRORED BITS Relay-to-Relay Communications

The SEL-patented MIRRORED BITS communications technology provides bidirectional relay-to-relay digital communications. MIRRORED BITS communications can operate independently on as many as two EIA-232 rear serial ports and one fiber-optic rear serial port on a single SEL-751.

This bidirectional digital communication creates eight additional virtual outputs (transmitted MIRRORED BITS) and eight additional virtual inputs (received MIRRORED BITS) for each serial port operating in the MIRRORED BITS mode (see *Figure 33*). Use these MIRRORED BITS to transmit/receive information between upstream relays and a downstream recloser control (e.g., SEL-351R) to enhance coordination and achieve faster tripping for downstream faults. MIRRORED BITS technology also helps reduce total scheme operating time by eliminating the need to assert output contacts to transmit information.

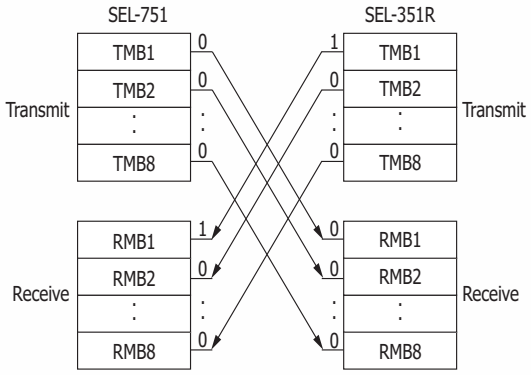

Figure 33 MIRRORED BITS Transmit and Receive Bits

Status and Trip Target LEDs

The SEL-751 includes 24 status and trip target tricolor LEDs on the front panel. When shipped from the factory, all LEDs are predefined and fixed in settings. You can reprogram these LEDs for specific applications. This combination of targets is explained and shown in *Figure 36*. Some front-panel relabeling of LEDs may be needed if you reprogram them for unique or specific applications—see *Configurable Labels*.

Configurable Labels

Use the configurable labels to relabel the operator controls and LEDs (shown in *Figure 36*) to suit your installation requirements. This feature includes preprinted labels (with factory-default text), blank label media, and a Microsoft Word template. The Microsoft Word template is available at selinc.com. This allows you to create quick, professional-looking labels for the SEL-751. Labels may also be customized without the use of a PC by writing the new label on the blank stock provided with the configurable label kit. The ability to customize the control and indication features allows specific utility or industry procedures to be implemented without the need for adhesive labels.

Web Server

The web server allows you to communicate with the relay via the Ethernet port without the need for additional communication software (web browser required). The web server allows you to access metering and monitoring data and to perform firmware upgrades.

Firmware Download Via Ethernet Ports

Relay firmware can be securely downloaded to your relay via the Ethernet port. The firmware is digitally signed to prevent malicious modification. Additionally, the Ethernet firmware download allows you to access and update all your network relays simultaneously.

Relay Dimensions

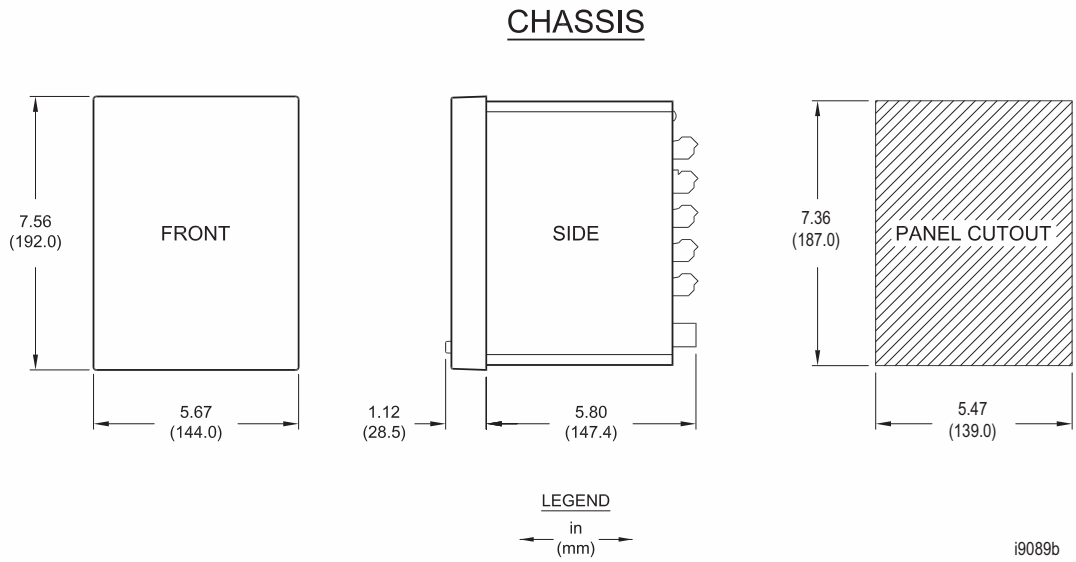

Figure 34 SEL-751 Dimensions for Rack- and Panel-Mount Models

Hardware Overview

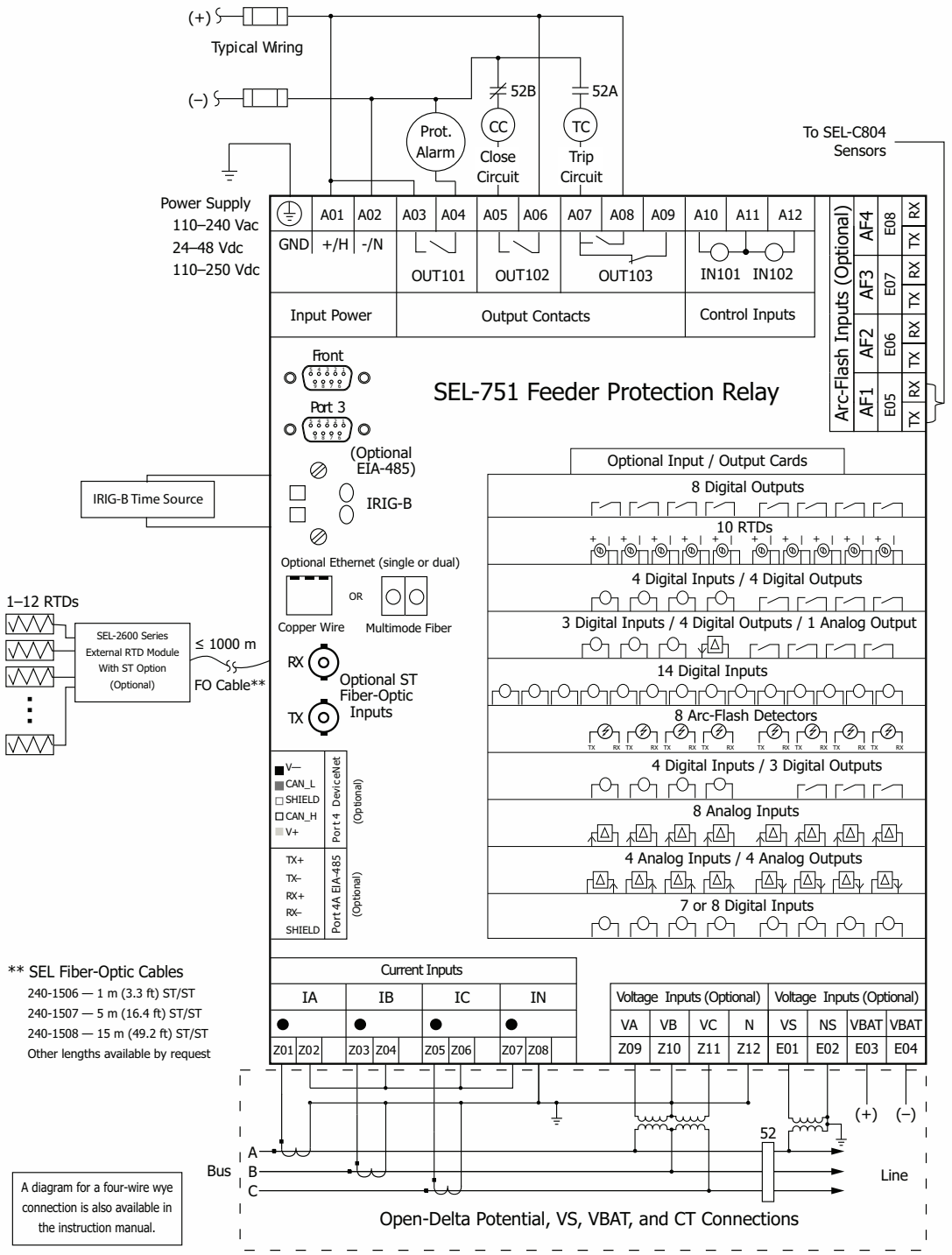

Figure 35 SEL-751 Wiring Diagram

Relay Panel Diagrams

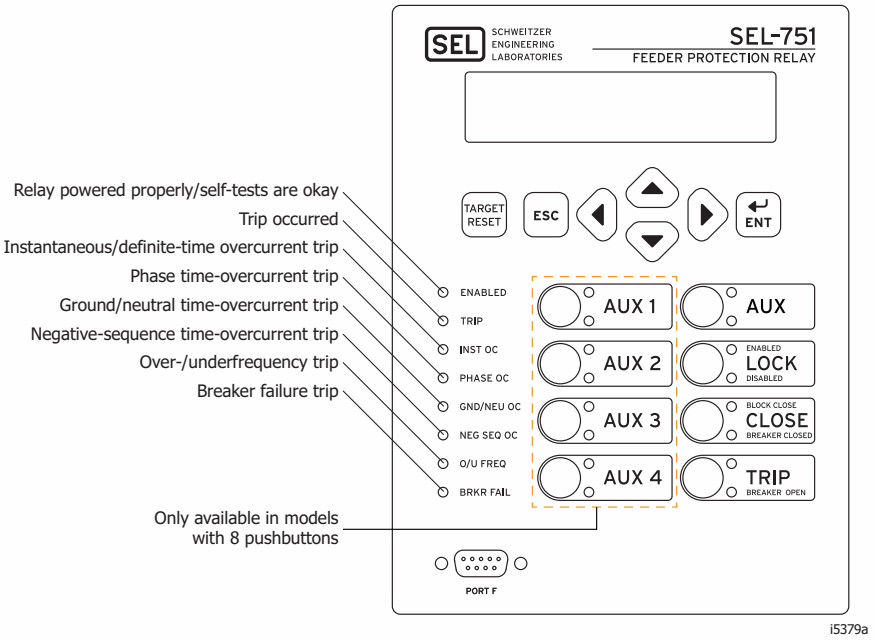

Figure 36 Front Panel With Default Configurable Labels

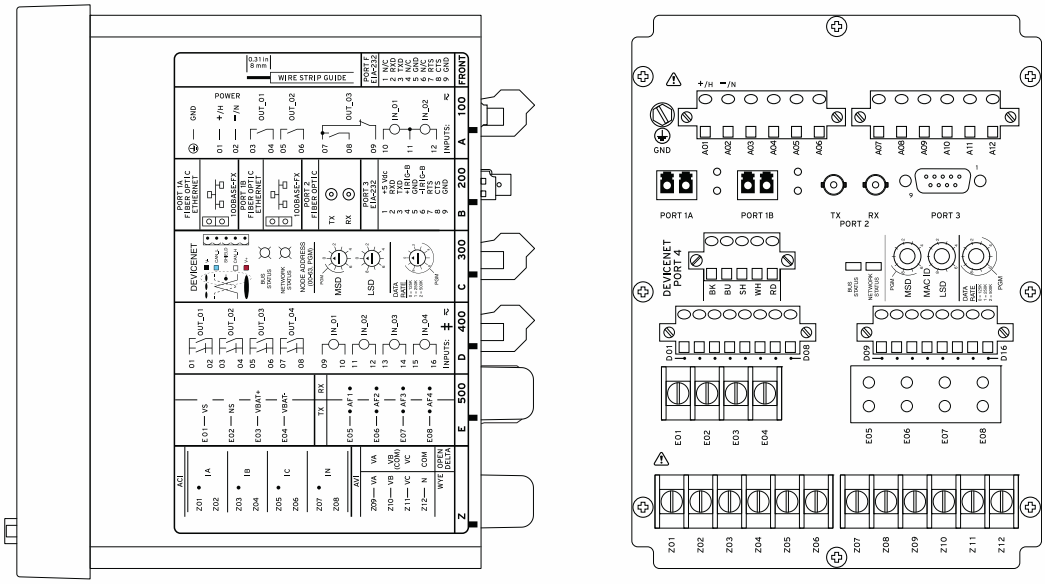

(A) Side-Panel Input and Output Designations

(B) Rear-Panel Layout

Figure 37 Dual Fiber Ethernet With 2 AVI/4 AFDI Voltage Option With Arc-Flash Detector Inputs, DeviceNet Card, and Fast Hybrid 4 DI/4 DO Card (Relay MOT 751501AA3CA70850830)

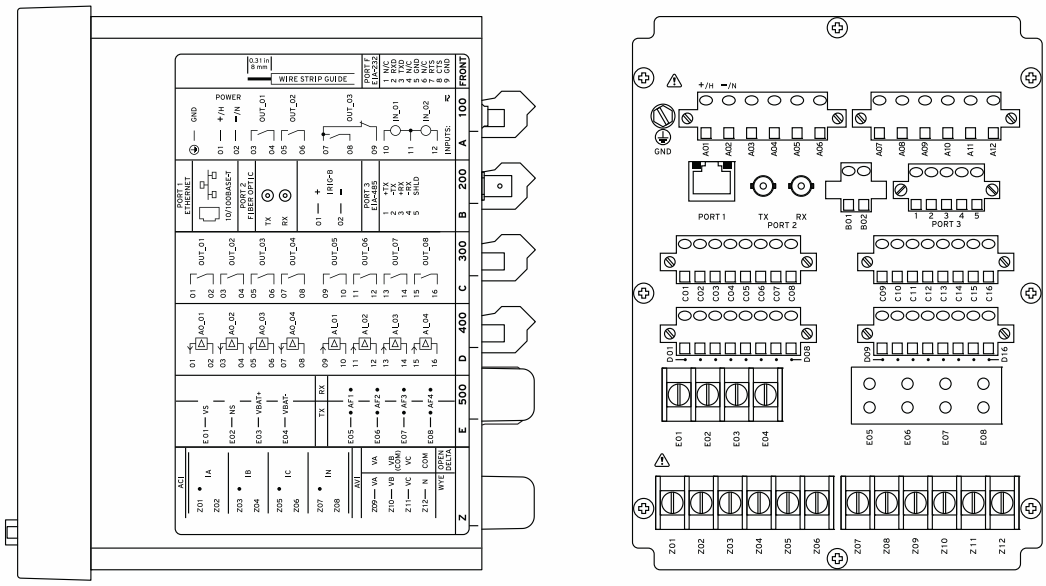

‡ SEE DOCUMENTATION FOR INPUT VOLTAGE RATING

(A) Side-Panel Input and Output Designations

(B) Rear-Panel Layout

Figure 38 Single Copper Ethernet, EIA-485 Communication, 8 DO (Form A) Card, 4 AI/4 AO Card, and 2 AVI/4 AFDI Voltage Option With Arc-Flash Detector Inputs (Relay MOT 751201A2A6X70810320)

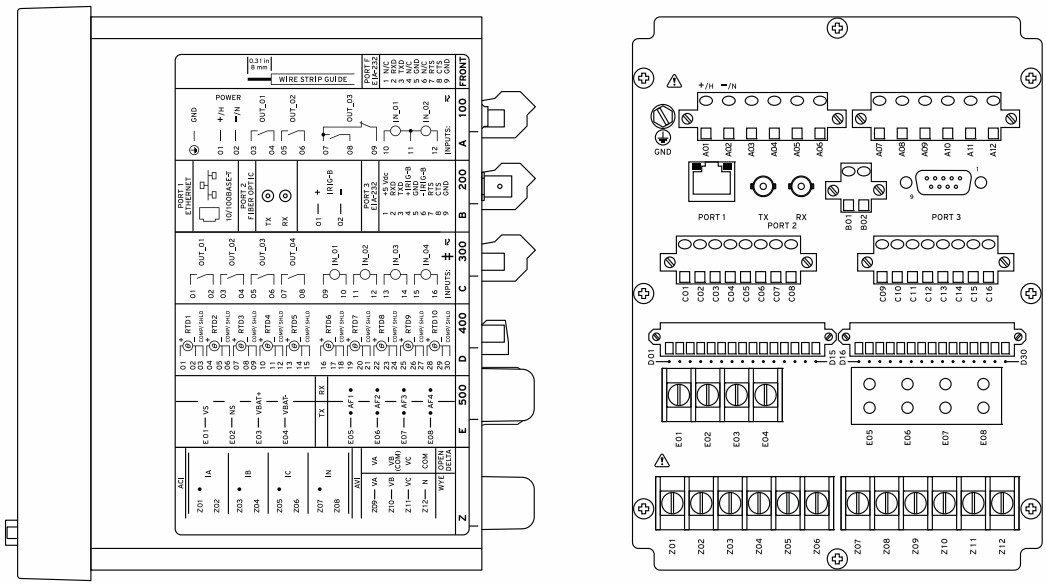

‡ SEE DOCUMENTATION FOR INPUT VOLTAGE RATING

(A) Side-Panel Input and Output Designations

(B) Rear-Panel Layout

Figure 39 Single Copper Ethernet With EIA-232 Communication, 10 RTD Card, 4 DI/4 DO Card, and 2 AVI/4 AFDI Voltage Option Card With Arc-Flash Detector Inputs (Relay MOT 751501A1A9X70850230)

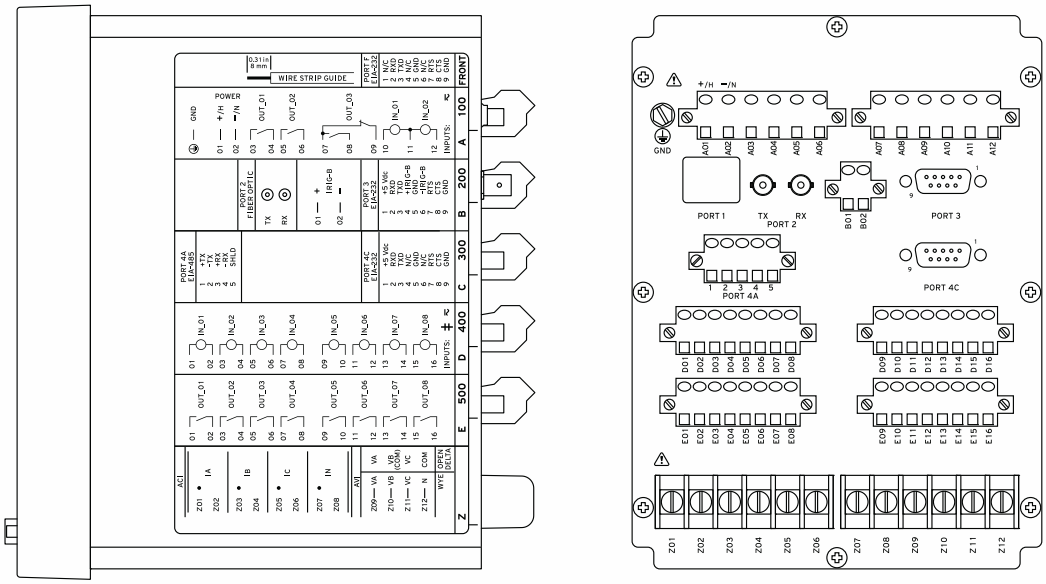

‡ SEE DOCUMENTATION FOR INPUT VOLTAGE RATING

(A) Side-Panel Input and Output Designations

(B) Rear-Panel Layout

Figure 40 No Ethernet, EIA-232 Serial Communications, EIA-232/EIA-485 Communications Card, 8 DI Card, and 8 DO Card (Form A) (Relay MOT 751401AA03A2A850000)

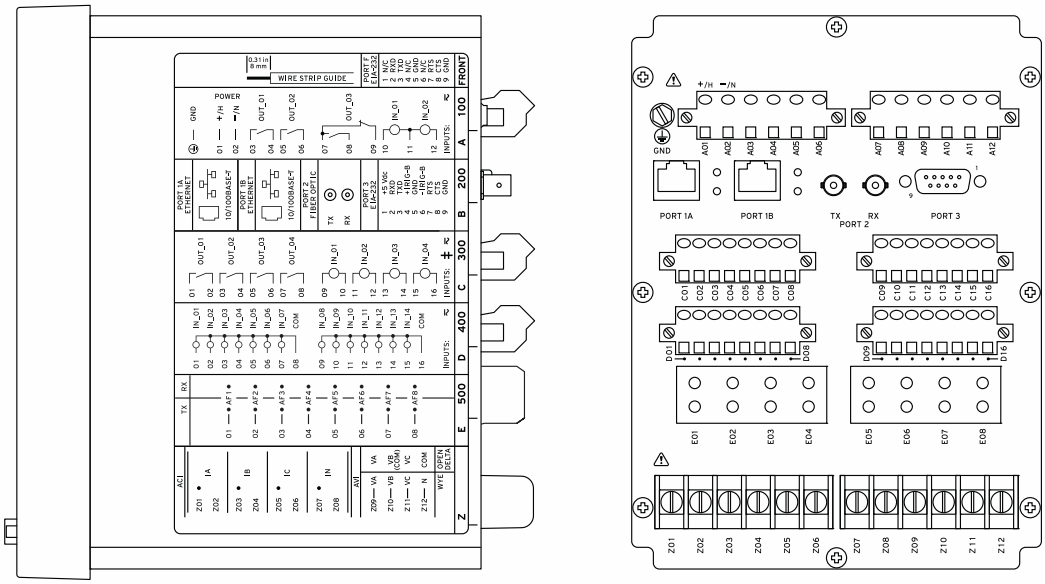

‡ SEE DOCUMENTATION FOR INPUT VOLTAGE RATING

(A) Side-Panel Input and Output Designations

(B) Rear-Panel Layout

Figure 41 Dual Copper Ethernet, 4 DI/4 DO Card, 14 DI Card, 8 AFDI Card With Arc-Flash Detector Inputs, 4 ACI/3 AVI Card With 5 A Phase, 200 mA Neutral, and 3-Phase AC Voltage Inputs (300 Vac) (Relay MOT 7515S1A1A4A77870671)

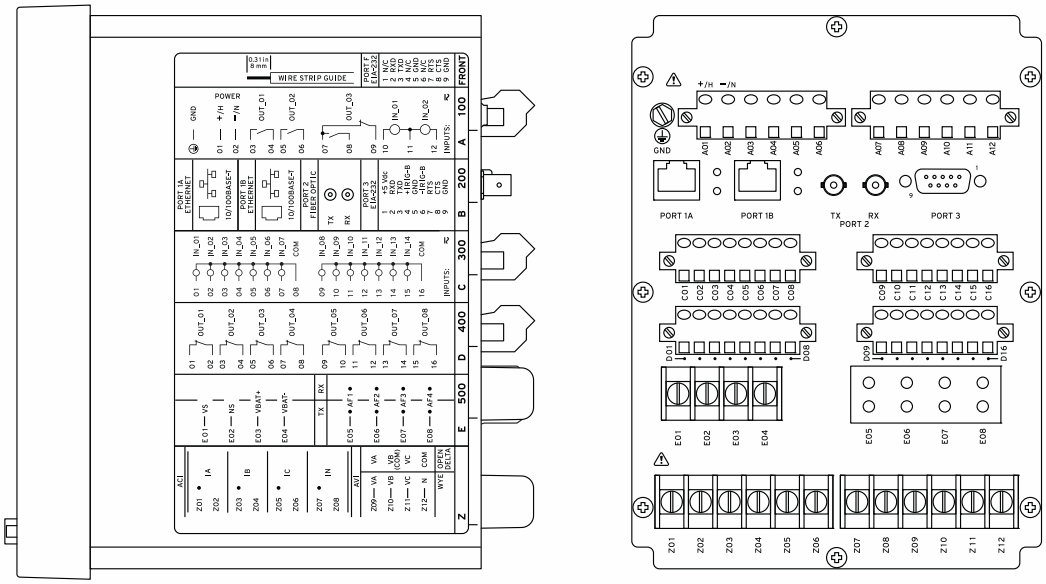

‡ SEE DOCUMENTATION FOR INPUT VOLTAGE RATING

(A) Side-Panel Input and Output Designations

(B) Rear-Panel Layout

Figure 42 Dual Copper Ethernet, 14 DI Card, 8 DO (Form B) Card, 2 AVI/4 AFDI Card With LEA Vsync, Vbat Inputs, and 4 Arc-Flash Detection Inputs, 4 ACI/3 AVI Card With 5 A Phase, 200 mA Neutral, and 3-Phase LEA Voltage Inputs (8 Vac) (Relay MOT 751501A4A2BL0L70671)

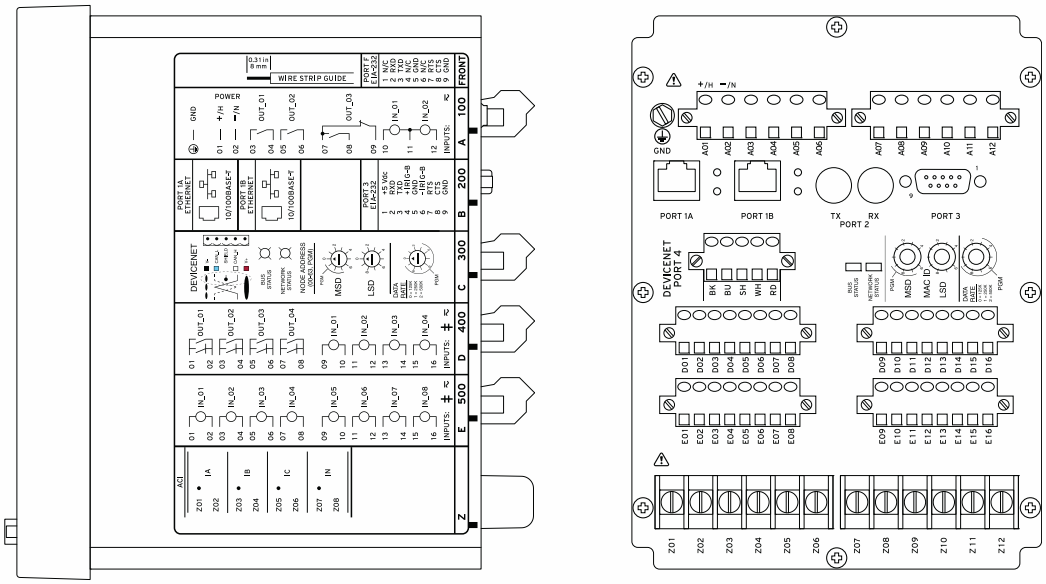

‡ SEE DOCUMENTATION FOR INPUT VOLTAGE RATING

(A) Side-Panel Input and Output Designations

(B) Rear-Panel Layout

Figure 43 Dual 10/100 Base-T Ethernet, EIA-232 Rear Port, Without Single Multimode ST Fiber-Optic Serial Port Rear, With DeviceNet Card, Fast Hybrid 4 DI/4 DO Card, 8 DI Card, and 4 ACI Card (No Voltage Inputs) (Relay MOT 751001AA3CA3AA50F30)

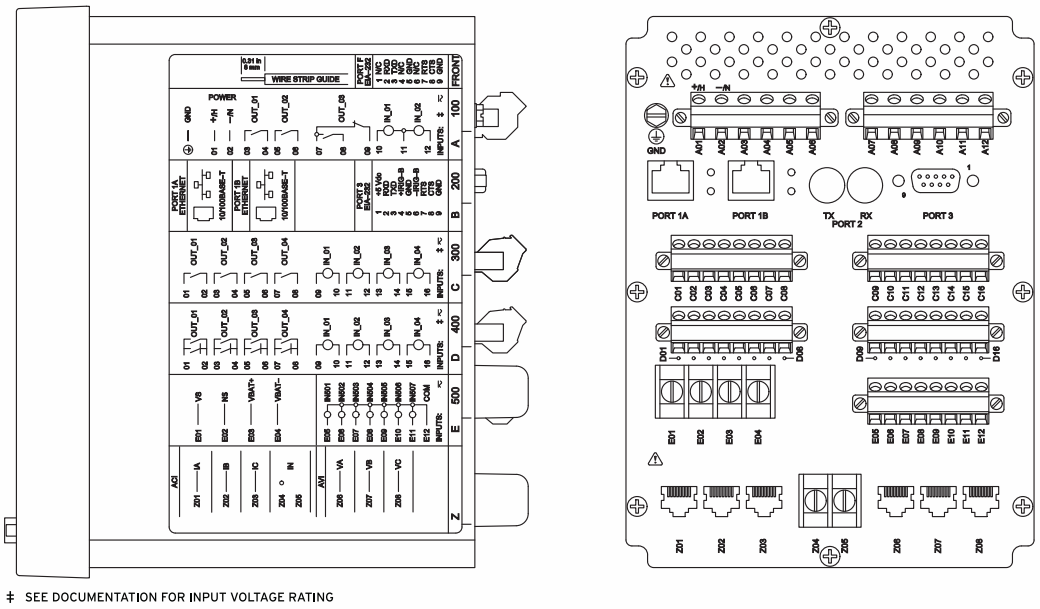

‡ SEE DOCUMENTATION FOR INPUT VOLTAGE RATING

(A) Side-Panel Input and Output Designations

(B) Rear-Panel Layout

Figure 44 Dual 10/100 Base-T Ethernet, EIA-232 Rear Port, 4 DI/4 DO Card, Fast Hybrid 4 DI/4 DO Card, LEA Vsync/ Vbat (300 Vdc) 7 DI Card, and 4 ACI/3 AVI LEA Card (Relay MOT 751001A1ACALA7LAF30)

Applications

Figure 45 shows some typical protection applications for the SEL-751. You can use the SEL-751 directional and non-directional overcurrent functions to protect virtually any power system circuit or device including lines, feeders, transformers, capacitor banks, reactors, and generators. Over- and underfrequency, over- and undervoltage, vector shift elements, rate-of-change-of-frequency elements, and synchronism-check elements are well suited for applications at distributed generation sites. Directional power elements make the relay suitable for utility and customer interface protection in applications with customer generation. IEC cable/line thermal elements can be used to prevent insulation damage.

Special relay versions can be ordered to provide sensitive earth fault (SEF) protection on high-impedance grounded systems, and directional overcurrent ground fault protection on ungrounded, high-impedance grounded and tuned reactance (Petersen coil) grounded systems.

The SEL-751 Feeder Protection Relay offers an extensive variety of protection and control features depending on the model and options selected. The SEL-751 can be configured to meet or exceed the protection and control requirements specified in the ANSI/IEEE Std 1547-2018, *IEEE Standard for Interconnection and Interoperability of Distributed Energy Resources with Associated Electric Power System Interfaces*.

You can use powerful SELOGIC control equations in all SEL-751 models for custom protection and control applications. SEL application guides and technical support personnel are available to help with unique applications.

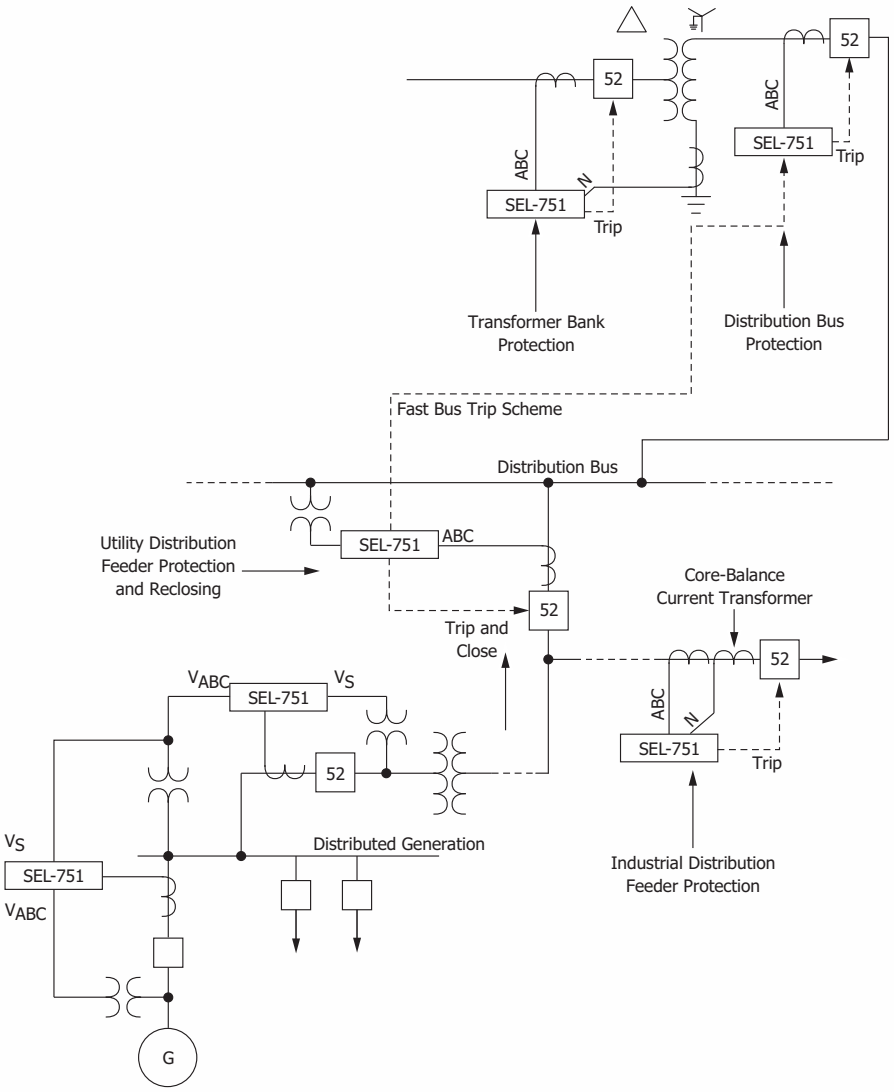

Figure 45 SEL-751 Feeder Protection Relay Applied Throughout the Power System

Specifications

Compliance

Designed and manufactured under an ISO 9001 certified quality management system

47 CFR 15B, Class A

Note: This equipment has been tested and found to comply with the limits for a Class A digital device, pursuant to part 15 of the FCC Rules. These limits are designed to provide reasonable protection against harmful interference when the equipment is operated in a commercial environment. This equipment generates, uses, and can radiate radio frequency energy and, if not installed and used in accordance with the instruction manual, may cause harmful interference to radio communications. Operation of this equipment in a residential area is likely to cause harmful interference in which case the user will be required to correct the interference at his own expense.

CE Mark in accordance with the requirements of the European Union

RCM Mark in accordance with the requirements of Australia

UKCA Mark in accordance with the requirements of United Kingdom

Normal Locations

UL Listed to U.S. and Canadian safety standards (File E212775, NRGU, NRGU7)

Note: UL has not yet developed requirements for products intended to detect and mitigate an arc flash; consequently, UL has not evaluated the performance of this feature. While UL is developing these requirements, it will place no restriction on the use of this product for arc-flash detection and mitigation. For test results performed by an independent laboratory and other information on the performance and verification of this feature, please contact SEL customer service.

Hazardous Locations

UL Certified for Hazardous Locations to U.S. and Canadian standards CL 1, DIV 2; GP A, B, C, D; T3C, maximum surrounding air temperature of 50°C (File E470448)

EU

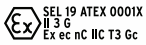

EN 60079-0:2012 + A11:2013, EN 60079-7:2015, EN 60079-15:2010, EN 60079-11:2012

Ambient air temperature shall not exceed –20°C ≤ Ta ≤ +50°C

Note: Where so marked, ATEX and UL Hazardous Location Certification tests are applicable to rated supply specifications only and do not apply to the absolute operating ranges, continuous thermal, or short circuit duration specifications.

General

AC Current Input

I_{NOM} = 200 mA, 1 A, or 5 A secondary, depending on the model.

Measurement Category: II

Phase and Neutral Currents

I_{NOM} = 5 A

Continuous Rating:	3 • I_{NOM} @ 85°C 4 • I_{NOM} @ 55°C
A/D Measurement Limit:	217 A peak (154 Arms symmetrical)
Saturation Current Rating:	Linear to 96 A symmetrical
1-Second Thermal:	500 A
Burden (per phase):	<0.1 VA @ 5 A

I_{NOM} = 1 A

Continuous Rating:	3 • I_{NOM} @ 85°C 4 • I_{NOM} @ 55°C
A/D Measurement Limit:	43 A peak (31 Arms symmetrical)
Saturation Current Rating:	Linear to 19.2 A symmetrical
1-Second Thermal:	100 A
Burden (per phase):	<0.01 VA @ 1 A

I_{NOM} = 200 mA

Continuous Rating:	4 A
A/D Measurement Limit:	8.4 A peak (6 Arms symmetrical)
Saturation Current Rating:	Linear to 4 A symmetrical
1-Second Thermal:	500 A
Burden (per phase):	<0.01 VA @ 0.2 A

Rogowski Coil-Based AC Current Inputs—Phase Currents

Continuous Rating:	30 Vrms
Nominal Input Voltage:	65 mV to 4.16 Vrms
Number of Gain Ranges:	6
Full Scale Voltage:	4, 8, 16, 32, 64, 128 Vrms
A/D Measurement Limit:	±185 V_{peak}
10-Second Thermal:	200 Vac
Input Impedance:	2 MΩ||50 pF
Standard Compliance:	IEC 61869-6 IEC 61869-13

Low-Power Current Transformer (LPCT) Inputs—Phase Currents

Continuous Rating:	4 Vrms
Nominal Input Voltage:	16 mV to 260 mVrms
Number of Gain Ranges:	4
Full Scale Voltage:	1, 2, 4, 8 Vrms
A/D Measurement Limit:	±11.3 V_{peak}
10-Second Thermal:	200 Vac
Input Impedance:	2 MΩ||50 pF
Standard Compliance:	IEC 61869-6 IEC 61869-13

AC Voltage Input

V_{NOM} (L-L) Setting Range:	20–250 V (if DELTA_Y := DELTA) 20–480 V (if DELTA_Y := WYE)

300 Vac Voltage Inputs

Rated Continuous Voltage:	300 Vac (phase-to-neutral)
10-Second Thermal:	600 Vac (phase-to-neutral)

	Burden	Input Impedance (Per Phase)	Input Impedance (Phase-to-Phase)
Vphase	0.008 VA @ 120 Vac	2 MΩ	4 MΩ
Vbat/Vs	0.003 VA @ 120 Vac	5 MΩ	

Low-Energy Analog (LEA) Voltage Inputs (Euro Connector Input)

Rated Continuous Voltage:	8 Vac (phase-to-neutral)
Nominal LEA Voltage:	0.5–6.8 Vrms (phase-to-neutral)
Input Range:	±12 V_{peak}
10-Second Thermal:	300 Vac (phase-to-neutral)
Input Impedance:	2 MΩ single-ended (phase-to-neutral) 4 MΩ differential (phase-to-phase)

Low-Energy Analog Voltage Sensor Inputs (RJ45 Input)

Continuous Rating:	8 Vrms
Nominal Input Voltage:	0.5–6.8 Vrms
Full-Scale Voltage:	8 Vrms
A/D Measurement Limit:	±12 V_{peak}
10-Second Thermal:	200 Vac
Input Impedance:	2 MΩ/50 pF
Standard Compliance:	IEC 61869-6 IEC 61869-13

Power Supply

Relay Start-Up Time:	Approximately 5–10 seconds (after power is applied until the **ENABLED** LED turns on)

High-Voltage Supply

Rated Supply Voltage:	110–240 Vac, 50/60 Hz 110–250 Vdc
Input Voltage Range (Design Range):	85–264 Vac 85–300 Vdc
Power Consumption:	<55 VA (ac) <25 W (dc)
Interruptions:	50 ms @ 125 Vac/Vdc 100 ms @ 250 Vac/Vdc

Low-Voltage Supply

Rated Supply Voltage:	24–48 Vdc
Input Voltage Range (Design Range):	19.2–60.0 Vdc
Power Consumption:	<25 W (dc)
Interruptions:	10 ms @ 24 Vdc 50 ms @ 48 Vdc

Fuse Ratings

Low-Voltage Power Supply Fuse

Rating:	3.15 A
Maximum Rated Voltage:	300 Vdc, 250 Vac
Breaking Capacity:	1500 A at 250 Vac
Type:	Time-lag T

High-Voltage Power Supply Fuse

Rating:	3.15 A
Maximum Rated Voltage:	300 Vdc, 250 Vac
Breaking Capacity:	1500 A at 250 Vac
Type:	Time-lag T

Output Contacts

General

The relay supports Form A, B, and C outputs.

Dielectric Test Voltage:	2500 Vac
Impulse Withstand Voltage (U_{IMP}):	5000 V
Mechanical Durability:	100,000 no-load operations

Standard Contacts

Pickup/Dropout Time:	≤8 ms (coil energization to contact closure)

DC Output Ratings

Rated Operational Voltage:	250 Vdc
Rated Voltage Range:	19.2–275 Vdc
Rated Insulation Voltage:	300 Vdc
Make:	30 A @ 250 Vdc per IEEE C37.90
Continuous Carry:	6 A @ 70°C 4 A @ 85°C
1-Second Thermal:	50 A
Contact Protection:	360 Vdc, 115 J MOV protection across open contacts

Breaking Capacity (10,000 Operations) per IEC 60255-0-20:1974:

24 Vdc	0.75 A	L/R = 40 ms
48 Vdc	0.50 A	L/R = 40 ms
125 Vdc	0.30 A	L/R = 40 ms
250 Vdc	0.20 A	L/R = 40 ms

Cyclic (2.5 Cycles/Second) per IEC 60255-0-20:1974:

24 Vdc	0.75 A	L/R = 40 ms
48 Vdc	0.50 A	L/R = 40 ms
125 Vdc	0.30 A	L/R = 40 ms
250 Vdc	0.20 A	L/R = 40 ms

AC Output Ratings

Maximum Operational Voltage (U_e) Rating:	240 Vac
Insulation Voltage (U_i) Rating (excluding EN 61010-1):	300 Vac
1-Second Thermal:	50 A
Contact Rating Designation:	B300

B300 (5 A Thermal Current, 300 Vac Max)			
	Maximum Current		Max VA
Voltage	120 Vac	240 Vac	—
Make	30 A	15 A	3600
Break	3 A	1.5 A	360
PF < 0.35, 50–60 Hz			

Utilization Category:	AC-15

AC-15		
Operational Voltage (Ue)	120 Vac	240 Vac
Operational Current (Ie)	3 A	1.5 A
Make Current	30 A	15 A
Break Current	3 A	1.5 A
Electromagnetic loads > 72 VA, PF < 0.3, 50–60 Hz		

Voltage Protection Across Open Contacts:	270 Vac, 40 J

Fast Hybrid (High-Speed, High-Current Interrupting)

DC Output Ratings

Rated Operational Voltage:	250 Vdc
Rated Voltage Range:	19.2–275 Vdc
Rated Insulation Voltage:	300 Vdc
Make:	30 A @ 250 Vdc per IEEE C37.90
Carry:	6 A @ 70°C 4 A @ 85°C
1-Second Thermal:	50 A
Open State Leakage Current:	<500 µA
MOV Protection (maximum voltage):	250 Vac/330 Vdc
Pickup Time:	<50 µs, resistive load
Dropout Time:	<8 ms, resistive load

Breaking Capacity (10,000 Operations):

48 Vdc	10.0 A	L/R = 40 ms
125 Vdc	10.0 A	L/R = 40 ms
250 Vdc	10.0 A	L/R = 20 ms

Cyclic Capacity (4 Cycles in 1 Second, Followed by 2 Minutes Idle for Thermal Dissipation):

48 Vdc	10.0 A	L/R = 40 ms
125 Vdc	10.0 A	L/R = 40 ms
250 Vdc	10.0 A	L/R = 20 ms

AC Output Ratings

See *AC Output Ratings* for *Standard Contacts*.

Optoisolated Control Inputs

When Used With DC Control Signals

Pickup/Dropout Time:	Depends on the input debounce settings
250 V:	ON for 200.0–312.5 Vdc OFF below 150 Vdc
220 V:	ON for 176–275 Vdc OFF below 132 Vdc
125 V:	ON for 100.0–156.2 Vdc OFF below 75 Vdc
110 V:	ON for 88.0–137.5 Vdc OFF below 66 Vdc
48 V:	ON for 38.4–60.0 Vdc OFF below 28.8 Vdc
24 V:	ON for 15–30 Vdc OFF below 5 Vdc

When Used With AC Control Signals

Pickup Time:	2 ms
Dropout Time:	16 ms
250 V:	ON for 170.6–312.5 Vac OFF below 106 Vac
220 V:	ON for 150.2–275 Vac OFF below 93.3 Vac
125 V:	ON for 85–156.2 Vac OFF below 53 Vac
110 V:	ON for 75.1–137.5 Vac OFF below 46.6 Vac
48 V:	ON for 32.8–60 Vac OFF below 20.3 Vac
24 V:	ON for 14–30 Vac OFF below 5 Vac
Current Draw at Nominal DC Voltage:	2 mA (at 220–250 V) 4 mA (at 48–125 V) 10 mA (at 24 V)
Rated Impulse Withstand Voltage (U_{imp}):	4000 V

Analog Output (Optional)

	1 A0	**4 A0**
Current:	4–20 mA	±20 mA
Voltage:	—	±10 V
Load at 1 mA:	—	0–15 kΩ
Load at 20 mA:	0–300 Ω	0–750 Ω
Load at 10 V:	—	>2000 Ω
Refresh Rate:	100 ms	100 ms
% Error, Full Scale, at 25°C:	<±1%	<±0.55%
Select From:	Analog quantities available in the relay	

Analog Inputs (Optional)

Maximum Input Range:	±20 mA ±10 V Operational range set by user
Input Impedance:	200 Ω (current mode) >10 kΩ (voltage mode)
Accuracy at 25°C	
With User Calibration:	0.05% of full scale (current mode) 0.025% of full scale (voltage mode)
Without User Calibration:	Better than 0.5% of full scale at 25°C
Accuracy Variation With Temperature:	±0.015% per °C of full-scale (±20 mA or ±10 V)

Arc-Flash Detectors (Optional)

Multimode fiber-optic receiver/transmitter pair

Fiber Type:	1000 µm diameter, 640 nm wavelength, plastic, clear-jacketed, or black-jacketed
Connector Type:	V-pin

Frequency and Phase Rotation

System Frequency:	50, 60 Hz
Phase Rotation:	ABC, ACB
Frequency Tracking:	15–70 Hz

Time-Code Input

Format:	Demodulated IRIG-B
On (1) State:	$V_{ih} \geq 2.2$ V
Off (0) State:	$V_{il} \leq 0.8$ V
Input Impedance:	2 kΩ

Synchronization Accuracy

Internal Clock:	±1 µs
Synchrophasor Reports (e.g., **MET PM**):	±10 µs
All other reports:	±5 ms
SNTP Accuracy:	±1 ms (in an ideal network)
PTP Accuracy:	±1 ms
Unsynchronized Clock Drift Relay Powered:	2 minutes per year typical

Communications Ports

Standard EIA-232 (2 ports)

Location:	Front Panel Rear Panel
Data Speed:	300–38400 bps

EIA-485 Port (optional)

Location:	Rear panel
Data Speed:	300–19200 bps

Ethernet Port (optional)

Single/Dual 10/100BASE-T copper (RJ45 connector)
Single/Dual 100BASE-FX (LC connector)

EIA-232 Multimode Fiber-Optic Port (Optional)

Location:	Rear panel
Data Speed:	300–38400 bps

Fiber-Optic Ports Characteristics

Port 1 (or 1A, 1B) Ethernet

Wavelength:	1300 nm
Optical Connector Type:	LC
Fiber Type:	Multimode
Link Budget:	16.1 dB
Typical TX Power:	–15.7 dBm
RX Min. Sensitivity:	–31.8 dBm
Fiber Size:	62.5/125 µm
Approximate Range:	~6.4 km
Data Rate:	100 Mbps
Typical Fiber Attenuation:	–2 dB/km

Port 2 Serial

Wavelength:	820 nm
Optical Connector Type:	ST
Fiber Type:	Multimode
Link Budget:	8 dB
Typical TX Power:	–16 dBm
RX Min. Sensitivity:	–24 dBm
Fiber Size:	62.5/125 µm
Approximate Range:	~1 km
Data Rate:	5 Mbps
Typical Fiber Attenuation:	–4 dB/km

Channels 1-8 Arc-Flash Detectors (AFDI)

Diagnostic Wavelength:	640 nm
Optical Connector Type:	V-pin
Fiber Type:	Multimode
Typical TX Power:	–12 dBm

Point Sensor

Minimum Receive Sensitivity:	–52.23 dB
Point Sensor Diagnostic Worst Case Loss:	–28 dB
Link Budget:	12.23 dB
Black-Jacketed Fiber Worst Case Loss:	–0.19 dBm
Black-Jacketed Fiber Typical Loss:	–0.17 dBm
ST or V-Pin Connector Splice Loss:	–2.00 dB
Approximate Range:	As much as 35 m

Fiber Sensor

Minimum Receive Sensitivity:	–29.23 dB
Link Budget:	17.23 dB
Clear-Jacketed Fiber Worst Case Loss:	–0.19 dBm
Clear-Jacketed Fiber Typical Loss:	–0.17 dBm
ST or V-Pin Connector Splice Loss:	–2.00 dB
Approximate Range:	As much as 70 m

Optional Communications Cards

Option 1:	EIA-232 or EIA-485 communications card
Option 2:	DeviceNet communications card

Communications Protocols

SEL, Modbus RTU and TCP/IP, DNP3 serial and LAN/WAN, FTP, Telnet, SNTP, IEEE 1588-2008 firmware-based PTP, IEC 61850 Edition 2, IEC 60870-5-103, EtherNet/IP, PRP, IEEE 802.1Q-2014 RSTP, MIRRORED BITS, EVMSG, IEEE C37.118 (synchrophasors), and DeviceNet

Operating Temperature

IEC Performance Rating:	–40° to +85°C (–40° to +185°F) (per IEC/EN 60068-2-1 and IEC/EN 60068-2-2)

Note: Not applicable to UL applications.
Note: The front-panel display is impaired for temperatures below –20°C and above +70°C.

DeviceNet Communications Card Rating:	+60°C (+140°F) maximum
Optoisolated Control Inputs:	As many as 26 inputs are allowed in ambient temperatures of 85°C or less As many as 34 inputs are allowed in ambient temperatures of 75°C or less As many as 44 inputs are allowed in ambient temperatures of 65°C or less

Operating Environment

Insulation Class:	1
Pollution Degree:	2
Overvoltage Category:	II
Atmospheric Pressure:	80–110 kPa
Relative Humidity:	5%–95%, noncondensing
Maximum Altitude Without Derating (Consult the Factory for Higher Altitude Derating):	2000 m

Dimensions

144.0 mm (5.67 in) x 192.0 mm (7.56 in) x 147.4 mm (5.80 in)

Weight

2.7 kg (6.0 lb)

Relay Mounting Screw (#8-32) Tightening Torque

Minimum:	1.4 Nm (12 in-lb)
Maximum:	1.7 Nm (15 in-lb)

Terminal Connections

Terminal Block

Screw Size:	#6
Ring Terminal Width:	0.310-inch maximum

Terminal Block Tightening Torque

Minimum:	0.9 Nm (8 in-lb)
Maximum:	1.4 Nm (12 in-lb)

Compression Plug Tightening Torque

Minimum:	0.5 Nm (4.4 in-lb)
Maximum:	1.0 Nm (8.8 in-lb)

Compression Plug Mounting Ear Screw Tightening Torque

Minimum:	0.18 Nm (1.6 in-lb)
Maximum:	0.25 Nm (2.2 in-lb)

Product Standards

Electromagnetic Compatibility:	IEC 60255-26:2013
Safety Standards:	IEC 60255-27:2013 UL 508 CSA C22.2 No. 14-05

Type Tests

Environmental Tests

Enclosure Protection:	IEC 60529:2001 + CRDG:2003 IP65 enclosed in panel (2-line display models) IP54 enclosed in panel (touchscreen models) IP50 for terminals enclosed in the dust-protection assembly (protection against solid foreign objects only) (SEL Part #915900170). The 10°C temperature derating applies to the temperature specifications of the relay. IP10 for terminals and the relay rear panel
Vibration Resistance:	IEC 60255-21-1:1988 IEC 60255-27:2013, Section 10.6.2.1 Endurance: Class 2 Response: Class 2
Shock Resistance:	IEC 60255-21-2:1988 IEC 60255-27:2013, Section 10.6.2.2 IEC 60255-27:2013, Section 10.6.2.3 Withstand: Class 1 Response: Class 2 Bump: Class 1
Seismic (Quake Response):	IEC 60255-21-3:1993 IEC 60255-27:2013, Section 10.6.2.4 Response: Class 2
Cold:	IEC 60068-2-1:2007 IEC 60255-27:2013, Section 10.6.1.2 IEC 60255-27:2013, Section 10.6.1.4 –40°C, 16 hours
Dry Heat:	IEC 60068-2-2:2007 IEC 60255-27:2013, Section 10.6.1.1 IEC 60255-27:2013, Section 10.6.1.3 85°C, 16 hours
Damp Heat, Steady State:	IEC 60068-2-78:2001 IEC 60255-27:2013, Section 10.6.1.5 40°C, 93% relative humidity, 10 days
Damp Heat, Cyclic:	IEC 60068-2-30:2001 IEC 60255-27:2013, Section 10.6.1.6 25° to 55°C, 95% relative humidity, 6 cycles
Change of Temperature:	IEC 60068-2-14:2009 IEC 60255-1:2010, Section 6.12.3.5 –40° to +85°C, ramp rate 1°C/min, 5 cycles

Dielectric Strength and Impulse Tests

Dielectric (Hi-Pot):	IEC 60255-27:2013, Section 10.6.4.3 IEEE C37.90-2005 1.0 kVac on analog outputs, Ethernet ports, Port 3, IRIG 2.0 kVac on analog inputs 2.5 kVac on contact I/O 3.6 kVdc on power supply, current, and voltage inputs
Impulse:	IEC 60255-27:2013, Section 10.6.4.2 0.5 J, 5 kV on power supply, contact I/O, ac current, and voltage inputs 0.5 J, 1 kV on Port 3, RTD, and IRIG ports 0.5 J, 530 V on analog outputs IEEE C37.90:2005 0.5 J, 5 kV 0.5 J, 530 V on analog outputs

RFI and Interference Tests

Electrostatic Discharge Immunity:	IEC 61000-4-2:2008 IEC 60255-26:2013; Section 7.2.3 IEEE C37.90.3:2001 Severity Level 4 8 kV contact discharge 15 kV air discharge
Radiated RF Immunity:	IEC 61000-4-3:2010 IEC 60255-26:2013; Section 7.2.4 10 V/m IEEE C37.90.2-2004 20 V/m
Fast Transient, Burst Immunity[a]:	IEC 61000-4-4:2011 IEC 60255-26:2013; Section 7.2.5 4 kV @ 5.0 kHz 2 kV @ 5.0 kHz for comm. ports
Surge Immunity[a]:	IEC 61000-4-5:2005 IEC 60255-26:2013; Section 7.2.7 2 kV line-to-line 4 kV line-to-earth
Surge Withstand Capability Immunity[a]:	EN 61000-4-18:2010 IEC 60255-26:2013; Section 7.2.6 2.5 kV common mode 1 kV differential mode 1 kV common mode on comm. ports IEEE C37.90.1-2002 2.5 kV oscillatory 4 kV fast transient Comm. ports, IRIG, and PTC ports Zone B, 2 kV line-to-earth LEA ports compliant with IEC 61869-13 tested to 1 kV, 1 MHz common mode
Conducted RF Immunity:	IEC 61000-4-6:2008 IEC 60255-26:2013; Section 7.2.8 10 Vrms
Magnetic Field Immunity:	IEC 61000-4-8:2009 IEC 60255-26:2013, Section 7.2.10 Severity Level: 1000 A/m for 3 seconds 100 A/m for 1 minute; 50/60 Hz IEC 61000-4-9: 2001 Severity Level: 1000 A/m IEC 61000-4-10:2001 Severity Level: 100 A/m (100 kHz and 1 MHz)

Power Supply Immunity:	IEC 61000-4-11:2004 IEC 61000-4-17:1999 IEC 61000-4-29:2000 IEC 60255-26:2013, Section 7.2.11 IEC 60255-26:2013, Section 7.2.12 IEC 60255-26:2013, Section 7.2.13

EMC Emissions

Conducted Emissions:	IEC 60255-26:2013 Class A FCC 47 CFR Part 15.107 Class A Canada ICES-001 (A) / NMB-001 (A) EN 55011:2009 + A1:2010 Class A EN 55022:2010 + AC:2011 Class A EN 55032:2012 + AC:2013 Class A CISPR 11:2009 + A1:2010 Class A CISPR 22:2008 Class A CISPR 32:2015 Class A
Radiated Emissions:	IEC 60255-26:2013 Class A FCC 47 CFR Part 15.109 Class A Canada ICES-001 (A) / NMB-001 (A) EN 55011:2009 + A1:2010 Class A EN 55022:2010 + AC:2011 Class A EN 55032:2012 + AC:2013 Class A CISPR 11:2009 + A1:2010 Class A CISPR 22:2008 Class A CISPR 32:2015 Class A

Processing Specifications and Oscillography

AC Voltage and Current Inputs:	32 samples per power system cycle
Frequency Tracking Range:	15–70 Hz
Digital Filtering:	One-cycle cosine after low-pass analog filtering. Net filtering (analog plus digital) rejects dc and all harmonics greater than the fundamental.
Protection and Control Processing:	Processing interval is 4 times per power system cycle (except for math variables and analog quantities, which are processed every 25 ms). Analog quantities for rms data are derived from data averaged from the previous 8 cycles.
Arc-Flash Processing:	Arc-Flash light is sampled 32 times per cycle Arc-Flash current, light, and 2 fast hybrid outputs are processed 16 times per cycle
Phase Discontinuity Detection:	Processing rate is once every 2 power system cycles.
Cold Load Pickup:	Processing rate is once every 2 power system cycles.

Oscillography

Length:	15, 64, or 180 cycles
Sampling Rate:	32 samples per cycle unfiltered 4 samples per cycle filtered
Trigger:	Programmable with Boolean expression
Format:	ASCII and Compressed ASCII Binary COMTRADE (32 samples per cycle unfiltered)

Note: Binary COMTRADE format as per IEEE C37.11-2013, IEEE Standard Common Format for Transient Data Exchange (COMTRADE) for Power Systems.

Time-Stamp Resolution:	1 ms
Time-Stamp Accuracy:	±5 ms

Sequential Events Recorder

Time-Stamp Resolution:	1 ms
Time-Stamp Accuracy (With Respect to Time Source):	±1 ms

Functional Requirements

Over- and Undercurrent Protection:	IEC 60255-151:2009
Over- and Undervoltage Protection:	IEC 60255-127:2010
Frequency Protection:	IEC 60255-181:2019

Relay Elements

Instantaneous/Definite-Time Overcurrent (50P, 50G, 50N, 50Q)

Supported and Effective Setting Range, A Secondary:

5 A models:	0.25–100.00 A, 0.01 A steps
1 A models:	0.05–20.00 A, 0.01 A steps
200 mA models:	0.010–4.000 A, 0.001 A steps (50N)
Accuracy:	±3% of setting plus ±0.02 • I_{NOM} A secondary (steady state) ±5% of setting plus ±0.02 • I_{NOM} A secondary (transient) ±6% of setting plus ±0.02 • I_{NOM} A secondary (transient for 50Q)
Time Delay:	0.00–400.00 seconds, 0.01 seconds steps
Pickup/Dropout Time:	<1.75 cycles (with fast hybrid output contacts)
Reset Ratio:	95% for setting ≥0.1 • I_{NOM} 90% for setting <0.1 • I_{NOM}
Transient Overreach:	<15% for X/R = 10–120
Overshoot Time:	5 ms

Arc-Flash Instantaneous Overcurrent (50PAF, 50NAF)

Pickup Setting Range, A Secondary:

5 A models:	0.50–100.00 A, 0.01-A steps
1 A models:	0.10–20.00 A, 0.01 A-steps
Accuracy:	0 to +10% of setting plus ±0.02 • I_{NOM} A secondary (steady state pickup)
Pickup/Dropout Time:	2–5 ms/1 cycle

Arc-Flash Time-Overlight (TOL1–TOL8)

Pickup Setting Range, % of Full Scale:	3.0–80.0% (point sensor) 0.6–80.0% (fiber sensor)
Pickup/Dropout Time:	2–5 ms/1 cycle

Inverse-Time Overcurrent (51P, 51G, 51N, 51Q)

Supported Setting Range, A Secondary:

5 A models:	0.25–24.00 A, 0.01 A steps
1 A models:	0.05–4.8 A, 0.01 A steps
200 mA models:	10–960 mA, 0.01 mA steps (51N)

Effective Setting Range (IEC), A Secondary:

5 A models:	0.5–5.165 A, 0.01 A steps
1 A models:	0.1–1.03 A, 0.01 A steps
200 mA models:	10–206 mA, 0.01 mA steps (51N)

Lowest Value of Input Energizing Quantity for which the Relay is Guaranteed to Operate (G_T):	1.30 times setting

Threshold at which the Relay Switches from Dependent Time Operation to Independent Time Operation (G_D):	>30 times setting
Accuracy:	±5% of setting plus ±0.02 • I_{NOM} A secondary (steady state pickup)
Time Dial	
U.S./IEEE:	0.50–15.00, 0.01 steps
IEC:	0.01–1.50, 0.01 steps
Accuracy (Operate Time):	±1.5 cycles, ±4% between 2 and 30 multiples of pickup (within A/D measurement limit)
Accuracy (Reset Time):	±1.5 cycles, ±4% between 0.5 and 0 multiples of pickup
Reset Ratio:	95% for setting ≥ 0.1 • I_NOM 90% for setting < 0.1 • I_NOM
Transient Overreach:	<15% for X/R = 10–120
Overshoot Time:	5–30 ms

Breaker Failure Instantaneous Overcurrent

Pickup Setting Range, A Secondary:	
5 A models:	0.10–10.00 A, 0.01 A steps
1 A models:	0.02–2.00 A, 0.01 A steps
Accuracy:	±3% of setting plus ±0.02 • I_{NOM} A secondary (steady state)
Time Delay:	0.00–2.00 seconds, 0.01 second steps
Pickup Time:	<1.5 cycles
Dropout Time:	<1 cycle

IEC Thermal Element (49IEC)

Setting Range:	Trip pickup, 1%–150% Alarm pickup, 1%–100%
Pickup Accuracy:	±2% (for I ≥ I_{NOM}) ±5% (for 0.4 • I_{NOM} < I < I_{NOM})
Time to Trip/Reset Accuracy:	±5% plus ±0.5 s of the calculated value

Undervoltage (27P, 27PP, 27S)

Supported and Effective Setting Range:	OFF, 2.00–300.00 V, 0.01 V steps (phase elements, phase-to-phase elements with delta inputs or synchronism voltage input) OFF, 2.00–520.00 V, 0.01 V steps (phase-to-phase elements with wye inputs)
Accuracy:	±1% of setting plus ±0.5 V
Time Delay:	0.00–120.00 seconds, 0.01-second steps
Pickup/Dropout Time:	<1.75 cycles (with fast hybrid output contacts)
Reset Ratio:	106% for setting ≤ 10 V 101% for setting > 10 V
Overshoot:	35 ms

Overvoltage (59P, 59PP, 59G, 59Q, 59S)

Supported and Effective Setting Range:	OFF, 2.00–300.00 V, 0.01 V steps (phase elements, phase-to-phase elements with delta inputs or synchronism voltage input) OFF, 2.00–520.00 V, 0.01 V steps (phase-to-phase elements with wye inputs)
Accuracy:	±1% of setting plus ±0.5 V
Time Delay:	0.00–120.00 seconds, 0.01 second steps
Pickup/Dropout Time:	<1.75 cycles (with fast hybrid output contacts)
Reset Ratio:	96% for setting ≤ 10 V 99% for setting > 10 V
Overshoot:	35 ms

Incipient Cable Fault (50INC)

Pickup Setting Range, A Secondary:	OFF, 0.50–50.00 A (phase), 0.01-A steps for 5 A OFF, 0.10–10.00 A (phase), 0.01-A steps for 1 A
Accuracy:	±5% of setting A secondary
Pickup time:	<1/2 cycle

Inverse-Time Undervoltage (27I)

Supported and Effective Setting Range:	OFF, 2.00–300.00 V, 0.01 V steps (phase elements, positive-sequence elements, phase-to-phase elements with delta inputs or synchronism-check voltage input) OFF, 2.00–520.00 V, 0.01 V steps (phase-to-phase elements with wye inputs)
Accuracy:	±1% of setting plus ±0.5 V
Pickup/Dropout Time:	<1.75 cycles (with fast hybrid output contacts)
Time Dial:	0.00–16.00 s
Accuracy:	±1.5 cyc plus ±4% between 0.95 and 0.1 multiples of pickup
Reset Ratio:	103% for setting ≤ 10 V 102% for setting > 10 V
Overshoot Time:	5–30 ms

Inverse-Time Overvoltage (59I)

Supported and Effective Setting Range:	OFF, 2.00–300.00 V, 0.01 V steps (phase elements, sequence elements, or phase-to-phase elements with delta inputs or synchronism voltage input) OFF, 2.00–520.00 V, 0.01 V steps (phase-to-phase elements with wye inputs)
Accuracy:	±1% of setting plus ±0.5 V
Time Dial:	0.00–16.00 s, 0.01 s steps
Accuracy:	±1.5 cyc plus ±4% between 1.05 and 5.5 multiples of pickup
Pickup/Dropout Time:	<1.75 cycles (with fast hybrid output contacts)
Reset Ratio:	96% for setting ≤ 10 V 99% for setting > 10 V
Overshoot Time:	5–30 ms

Harmonic Blocking

Pickup Range (% of fundamental):	5%–100%
Pickup Accuracy (A secondary):	
5 A models:	±5% plus ±0.10 A of harmonic current
1 A models:	±5% plus ±0.02 A of harmonic current
Time Delay Accuracy:	±0.5% plus ±0.25 cycle

Vector Shift (78VS)

Pickup Setting Range:	2.0°–30.0°, 0.1-degree increment
Accuracy:	±10% of the pickup setting, ±1 degree
Voltage Supervision Threshold:	20.0%–100.0% • VNOM
Pickup Time:	<3 cycles

Power Elements (32)

Instantaneous/Definite Time, Three-Phase Elements Type:	+W, –W, +VAR, –VAR
Pickup Setting Range, VA Secondary:	
5 A models:	1.0–6500.0 VA, 0.1 VA steps
1 A models:	0.2–1300.0 VA, 0.1 VA steps
Accuracy:	±0.10 A • (L-L voltage secondary) plus ±5% of setting at unity power factor for power elements and zero power factor for reactive power elements (5 A nominal) ±0.02 A • (L-L voltage secondary) plus ±5% of setting at unity power factor for power elements and zero power factor for reactive power elements (1 A nominal)
Time Delay:	0.0–240.0 seconds, 0.1-second steps
Pickup/Dropout Time:	<10 cycles

Power Factor (55)

Setting Range:	OFF, 0.05–0.99
Accuracy:	±5% of full scale for current ≥ 0.5 • I_{NOM}
Time Delay:	1–240 seconds, 1-second steps

Frequency (81)

Setting Range:	Off, 15.00–70.00 Hz
Accuracy:	±0.01 Hz (V1 >60 V) with voltage tracking ±0.05 Hz (I1 >0.8 • I_{NOM}) with current tracking
Time Delay:	0.00–400.00 seconds, 0.01-second steps
Pickup/Dropout Time:	<5.5 cycles (with fast hybrid output contacts)
Reset Hysteresis:	<0.02 Hz

Rate-of-Change of Frequency (81R)

Setting Range:	OFF, 0.10–15.00 Hz/s
Accuracy:	±100 mHz/s, plus ±3.33% of pickup
Time Delay:	0.10–60.00 seconds, 0.01-second steps

Synchronism Check (25)

Pickup Range, Secondary Voltage:	0.00–300.00 V
Pickup Accuracy, Secondary Voltage:	±1% plus ±0.5 V (over the range of 2–300 V)
Slip Frequency Pickup Range:	0.05 Hz–0.50 Hz
Slip Frequency Pickup Accuracy:	±0.02 Hz
Phase Angle Range:	0°–80°
Phase Angle Accuracy:	±4°

Load-Encroachment Detection

Pickup Setting Range

5 A Model:	0.10–128.00 Ω secondary, 0.01 Ω steps
1 A Model:	0.50–640.00 Ω secondary, 0.01 Ω steps
Forward Load Angle:	–90° to +90°
Forward Load Angle:	+90° to +270°

Accuracy

Impedance Measurement:	±5% plus ±0.5 Ω
Angle Measurement:	±3°

Phase Discontinuity Detection

Pickup Setting Range:	0.01–1.00 pu, 0.01 steps
Accuracy:	±5% of setting above 0.15 pu
Processing rate:	Once every 2 power system cycles

Broken Conductor Detection

Sensitivity (Minimum Line Charging Current Required for Broken Conductor Detection):	15 mA secondary for 5 A 3 mA secondary for 1 A
Minimum Operating Time (After the Conductor Breaks and Series Arc Extinguishes):	8 cycles
Time Delay for Zone 2:	OFF, 0–600 cycles, 1-cycle steps
Timer Accuracy:	±2 cycles

Cold-Load Pickup

Pickup Setting Range:	0–500 minutes, 1-minute steps
Accuracy:	0.5% ±2 cycles
Processing rate:	Once every 2 power system cycles

Station Battery Voltage Monitor

Operating Range:	0–350 Vdc (300 Vdc for UL purposes)
Pickup Range:	20.00–300.00 Vdc
Pickup accuracy:	±2% of setting plus ±2 Vdc

Timers

Setting Range:	Various
Accuracy:	±0.5% of setting plus ±1/4 cycle

RTD Protection

Setting Range:	Off, 1°–250°C
Accuracy:	±2°C
RTD Open-Circuit Detection:	>250°C
RTD Short-Circuit Detection:	<–50°C
RTD Types:	PT100, NI100, NI120, CU10
RTD Lead Resistance:	25 Ω max. per lead
Update Rate:	<3 s

Noise Immunity on RTD Inputs:	As high as 1.4 Vac (peak) at 50 Hz or greater frequency
RTD Fault/Alarm/Trip Time Delay:	Approx. 12 s

Metering

Accuracies are specified at 20°C, nominal frequency, ac currents within (0.2–20.0) • I_{NOM} A secondary, and ac voltages within 50–250 V secondary (1.33–6.67 V secondary with 8 V LEA option), unless otherwise noted.

Phase Currents:	±1% of reading, ±1° (±2.5° at 0.2–0.5 A for relays with I_{NOM} = 1 A)
Three-Phase Average Current:	±1% of reading
IG (Residual Current):	±2% of reading, ±2° (±5.0° at 0.2–0.5 A for relays with I_{NOM} = 1 A)
IN (Neutral Current):	±1% of reading, ±1° (±2.5° at 0.2–0.5 A for relays with I_{NOM} = 1 A) ±1.6 mA and ±1% (0.04–4.0 A) (0.2 A nominal channel IN current input)
I1 Positive-Sequence Current:	±2% of reading
3I2 Negative-Sequence Current:	±2% of reading
System Frequency:	±0.01 Hz of reading for frequencies within 15–70 Hz (V1 > 60 V)
Line-to-Line Voltages:	±1% of reading, ±1° for voltages
Three-Phase Average Line-to-Line Voltage:	±1% of reading for voltages within 24–264 V
Line-to-Ground Voltages:	±1% of reading, ±1° for voltages within 24–264 V (0.64–7.04 V for LEA inputs)
Three-Phase Average Line-to-Ground Voltages:	±1% of reading for voltages within 24–264 V (0.64–7.04 V for LEA inputs)
Voltage Imbalance (%):	±2% of reading
V1 Positive-Sequence Voltage:	±2% of reading for voltages within 24–264 V (0.64–7.04 V for LEA inputs)
3V2 Negative-Sequence Voltage:	±2% of reading for voltages within 24–264 V (0.64–7.04 V for LEA inputs)
Real Three-Phase Power (kW):	±3% of reading for 0.10 < pf < 1.00
Reactive Three-Phase Power (kVAR):	±3% of reading for 0.00 < pf < 0.90
Apparent Three-Phase Power (kVA):	±3% of reading
Power Factor:	±2% of reading
RTD Temperatures:	±2°C

Energy Meter

Accumulators:	Separate IN and OUT accumulators updated once per second, transferred to nonvolatile storage 4 times per day
ASCII Report Resolution:	0.001 MWh
Accuracy:	The accuracy of the energy meter depends on applied current and power factor as shown in the power metering accuracy specifications above. The additional error introduced by accumulating power to yield energy is negligible when power changes slowly compared to the processing rate of once per second.

Synchrophasor Accuracy

Maximum Message Rate

Nominal 60 Hz System:	60 messages per second
Nominal 50 Hz System:	50 messages per second

The voltage accuracy specifications are only applicable for the model options with standard voltage inputs (not applicable to LEA option).
The current accuracy specifications are applicable for all 1 A and 5 A options.
Note: For the SEL-751 current only model, the accuracy specifications for currents are only applicable when the applied signal frequency equals FNOM.

Accuracy for Voltages

Level 1 compliant as specified in IEEE C37.118 under the following conditions for the specified range.

Conditions

- At maximum message rate
- When phasor has the same frequency as the positive-sequence voltage
- Frequency-based phasor compensation is enabled PHCOMP := Y)
- The narrow bandwidth filter is selected (PMAPP := N)

Range

Frequency:	±5.0 Hz of nominal (50 or 60 Hz)
Magnitude:	30 V–250 V
Phase Angle:	–179.99° to 180.00°
Out-of-Band Interfering Frequency (Fs):	10 Hz ≤ Fs ≤ (2 • FNOM)

Accuracy for Currents

Level 1 compliant as specified in IEEE C37.118 under the following conditions for the specified range.

Conditions

- At maximum message rate
- When phasor has the same frequency as the positive-sequence voltage
- Frequency-based phasor compensation is enabled (PHCOMP := Y)
- The narrow bandwidth filter is selected (PMAPP := N)

Range

Frequency:	±5.0 Hz of nominal (50 or 60 Hz)
Magnitude:	(0.4–2) • I_{NOM} (I_{NOM} = 1 A or 5 A)
Phase Angle:	–179.99° to 180.00°
Out-of-Band Interfering Frequency (Fs):	10 Hz ≤ Fs ≤ (2 • FNOM)

[a] Front port serial cable (non-fiber) lengths assumed to be <3 m.

Technical Support

We appreciate your interest in SEL products and services. If you have questions or comments, please contact us at:

Schweitzer Engineering Laboratories, Inc.
2350 NE Hopkins Court
Pullman, WA 99163-5603 U.S.A.
Tel: +1.509.338.3838
Fax: +1.509.332.7990
Internet: selinc.com/support
Email: info@selinc.com

© 2011–2023 by Schweitzer Engineering Laboratories, Inc. All rights reserved.

All brand or product names appearing in this document are the trademark or registered trademark of their respective holders. No SEL trademarks may be used without written permission. SEL products appearing in this document may be covered by U.S. and Foreign patents.

Schweitzer Engineering Laboratories, Inc. reserves all rights and benefits afforded under federal and international copyright and patent laws in its products, including without limitation software, firmware, and documentation.

The information in this document is provided for informational use only and is subject to change without notice. Schweitzer Engineering Laboratories, Inc. has approved only the English language document.

This product is covered by the standard SEL 10-year warranty. For warranty details, visit selinc.com or contact your customer service representative.

SCHWEITZER ENGINEERING LABORATORIES, INC.
2350 NE Hopkins Court • Pullman, WA 99163-5603 U.S.A.
Tel: +1.509.332.1890 • Fax: +1.509.332.7990
selinc.com • info@selinc.com

PDS751-01

SEL-751 Relay

Date Code 20230315

• Revised •
03/01/14

Push Button Units and Indicator Lights

30mm Water, Oil Tight & Corrosion Resistant – Class 52

Accessories and spare parts

Selection and ordering data

	Version	Suitable for	Color	Order no.
	Protective boot Offers protection from ice and foreign substances from interfering with button operation	Flush pushbutton operations	clear black	**52AABA** **52AAB1**
	Guards Prevents accidental operation	Non-illuminated basic pushbuttons	chrome blackmax	**52AAGP** **52AXGP**
		1 5/8" mushroom pushbuttons, 1 3/4" push-pull units①, and twist to release units	chrome blackmax	**52AAGM** **52AXGM**
		Push to test/illuminated pushbutton and indicator lights	chrome blackmax	**52AAGL** **52AXGL**
	EMERGENCY-STOP Lock Out	Class 52 Illuminated Mushroom Head Pushbuttons; 304 Stainless Steel	chrome (304 SS)	**52AALE**
	EMERGENCY-STOP Backing Ring	Yellow 90mm E-STOP Backing Ring		**52AAR**
	Locknuts Replacement front ring	Non-illuminated basic pushbuttons	chrome blackmax	**52AANP** **52AXNP**
		Non-illuminated mushroom pushbuttons	chrome blackmax	**52AANL** **52AXNL**
		Push-pull and twist-to-release units (only for push-pull units starting with 52PP or 52BP)②	chrome blackmax	**52CANP** **52CXNP**
		Indicator Lights	blue amber	**52AANL** **52AXNL**
		Selector switches	chrome blackmax	**52AANS** **52AXNS**
	Mounting Accessories	Class 52 Trim Washer Kit (Set of 10 pcs) Class 52 Washer Kit (Include 2-Neoprene Gaskets, 1-Trim Washer, 1-Index Locking Ring (chrome)	chrome	**52AAQ** **52AAD**
	Padlock attachments	Non-illuminated basic pushbuttons	flush extended	**52AALA** **52AALB**
	Padlock cover Lock devices in off position	Pushbuttons, selector switches, and non-illuminated mushroom heads		**52AALS**
	Lock nut wrench	All devices		**52MAWB**
	Hole plugs		corrosion resistant steel, grey stainless steel	**52AAH6** **52ABH6** **52ABHS**
	Spare keys (Kit includes 1 Key)	Class 52 Standard Keyed Selector Switch.	501CH	**52KEY-501CH**
		Keyed Selector Switch ordered with Suffix X302.	506CH	**52KEY-506CH**
		Keyed Selector Switch ordered with Suffix X301.	547CH	**52KEY-547CH**
		Keyed Selector Switch ordered with Suffix X300.	548CH	**52KEY-548CH**
		Keyed Selector Switch ordered with Suffix X299.	549CH	**52KEY-549CH**
		Keyed Selector Switch ordered with Suffix X298.	550CH	**52KEY-550CH**
	Grounding kit	All devices		**52AL109145**
	Touchsafe contact blocks with gold flashing			
 52 BAJ	1 NO			**52BAK**
	1 NC			**52BAJ**④
	1 NO - 1 NC			**52BJK**④
 52 BAK	1 NO early make	closes before 52BAK		**52BAH**
	1 NC late break	opens after 52 BAJ		**52BAE**
	1 NO - 1 NC	Reed switch; UL listed for class 1 division 2; .25A Max, 200V AC, 10 Watt max .5A Max, 200V DC, 10 Watt max		**52BAR**③
 52 BAR	1 NC extra late break			**52BAU**

① These can also be used with the 1 5/8" push-pull devices.

② For push-pull units starting with part numbers 52PA, 52PE or 52PX, replacement locknuts can be ordered using 52AANL (Chrome) and 52AXNL (BlackMax).

③ Hermetically Sealed

④ ⊖ Positive opening according to IEC 60947-5-1, Appendix K.

StarTech Part # MCM110SC2

10/100 Fiber to Ethernet Media Converter Multi Mode SC 2 km

Product ID: MCM110SC2

The MCM110SC2 10/100 Multi Mode Fiber Ethernet Media Converter SC 2 km creates an economical, cost-effective Ethernet-fiber link, transparently converting to/from 10Base-T or 100Base-Tx Ethernet signals and 100Base-Fx optical signals to extend an Ethernet network connection over an SC terminated multimode fiber backbone.

The converter supports a maximum multimode fiber optic cable distance of 2 kilometers (1.2 miles), providing a simple solution for connecting 10Base-T/100Base-Tx Ethernet networks to remote locations using SC-terminated multimode fiber, while delivering solid network performance and scalability.

This versatile Ethernet to Fiber converter is compatible with most 3COM, Cisco, Lucent and Nortel networks and fully complies with applicable IEEE 802.3 standards.

Backed by a StarTech.com 2-year warranty and free lifetime technical support.

Certifications, Reports and Compatibility

Applications

• Extend your Ethernet connection up to 2km away using fiber optics

• Designed for large, high speed work groups that require expansion of fast Ethernet Networks

• Connect via fiber optics two or more buildings on the same campus

• Connect remote sub-networks to larger fiber optic networks/backbones

StarTech Part # MCM110SC2

Features

• Supports a maximum multi mode fiber optic cable distance of 2 km

• Compatible with most 3COM, Cisco, Lucent and Nortel networks

• Compact design

• Supports transparent Q-in-Q double tagged frames

• Supports Link Fault Pass through (LFP)

• Supports IEEE 802.1q Tag VLAN pass thru

• Supports flow control (Pause)

• Provides switch configuration of half/full duplex transfer mode for FX port

• LED Indicators for simple Ethernet/Fiber network link monitoring

• Forward 9K jumbo packets in converter mode

• Auto negotiation or Force 10/100 Mbps and MDI/MDI-X (Crossover for TX port)

• Auto detects half/full duplex transfer mode from the TX port

• Manual controls for UTP mode, speed, Full and Half Duplex, and LFP (Link Fault pass-through) on/off

• Simple installation

Hardware		
	Warranty	2 Years
	PoE	No
	WDM	No
	Industry Standards	IEEE 802.3 10BASE-T
		IEEE 802.3u 100BASE-FX
		IEEE 802.3u 100BASE-TX
Performance		
	Maximum Data Transfer Rate	10/100Mbps
	Max Transfer Distance	2 km (1.2 mi)

StarTech Part # MCM110SC2

	Type	Multi Mode
	Wavelength	1310nm
	Fiber Operating Mode	Half/Full-Duplex
	MTBF	65,000 Hours
Connector(s)		
	Local Unit Connectors	1 - RJ-45
	Remote Unit Connectors	1 - Fiber Optic SC Duplex
Indicators		
	LED Indicators	1 - Ethernet Link & Activity (ON - Ethernet Link OK, Blinking - Activity on Ethernet Link)
		1 - FEF [Far End Fault](On - Fault Detected, Off - No Fault
		1 - Fiber Link & Activity (On - Fiber Link OK, Blinking - Activity on Fiber Link)
		1 - Full (Full duplex / Half duplex)
		1 - Power
		1 - Speed (Off - 10Mbps, On - 100 Mbps)
Power		
	Power Source	AC Adapter Included
	Input Voltage	100 - 240 AC
	Output Voltage	12V DC
	Output Current	1A
	Center Tip Polarity	Positive
	Plug Type	M
	Power Consumption (In Watts)	2.4
Environmental		
	Operating Temperature	0C to 50C (32F to 122F)
	Storage Temperature	-10C to 70C (14F to 158F)

	Humidity	10~90% RH
Physical Characteristics		
	Color	Black
	Material	Plastic
	Product Length	3.7 in [95 mm]
	Product Width	3.0 in [75 mm]
	Product Height	0.8 in [2 cm]
	Weight of Product	3.0 oz [84 g]
Packaging Information		
	Package Quantity	1
	Package Length	6.9 in [17.5 cm]
	Package Width	5.7 in [14.5 cm]
	Package Height	2.5 in [63 mm]
	Shipping (Package) Weight	9.5 oz [269 g]
What's in the Box		
	Included in Package	1 - Media Converter
		1 - Power Adapter
		1 - User's Manual

Product appearance and specifications are subject to change without notice.

TTL Part # 468-277

TTL Transformer Technologies Ltd.

Voltage Transformer

Model 468

FREQUENCY:
60 Hz.
STANDARD SECONDARY VOLTAGE:
120 Volts
INSULATION LEVEL:
600 Volts. 10 kV BIL. full wave
ACCURACY CLASS:
± 0.6% at all burdens up to 7.5 VA and ±1.5% 20 VA Burden.
THERMAL RATING:
75 VA AT 30°c . amb., 50 VA AT 55°c. amb.
APPROXIMATE WEIGHT:
4 lbs.
CONNECTIONS:
-Terminals are brass studs No. 10-32 screws with one lockwasher, one flat washer, and regular nut.

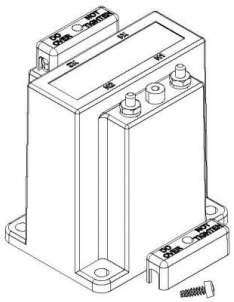

CERTIFICATIONS:

c UL us
E228202
c SA us
223647
nqa. ISO 9001 Registered Quality Management

MODEL 468
Approximate weight: 4 lbs.

CATALOG NUMBER	VOLTAGE RATING	TURNS RATIO	REC. PRIMARY FUSE RATING
468-069	69.3:120	0.58:1	3
468-120	120:120	1:1	2
468-208	208:120	1.73:1	1
468-240	240:120	2:1	1
468-277	277:120	2.31:1	1
468-288	288:120	2.4:1	0.75
468-300	300:120	2.5:1	0.75
468-346	346:120	2.88:1	0.75
468-480*	480:120	4:1	0.50
468-600*	600:120	5:1	0.40

- The core and coil assembly is encased in a thermoplastic shell and filled with resin.
- Each transformer has two plastic terminal covers.
- These transformers are designed for operation line to line. They may also be operated line to ground or line to neutral at reduced voltage (58% of rated volts).
- It is desirable to use a 0.80 amp fuse in the secondary to protect the transformer.
- With two exceptions these transformers are ANSI C57. 13 group 1. Those marked * are group 2.
- Models 468-380, 468-400, 468-416 designed specifically for 50 Hz operation are available with reduced performance consult factory for details.

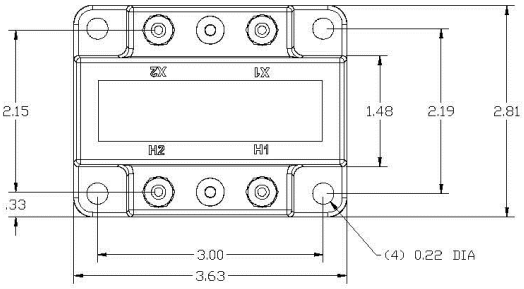

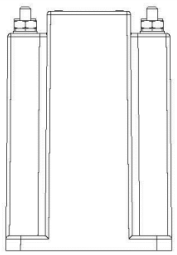

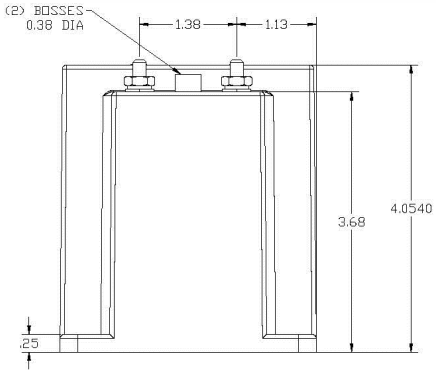

Products are manufactured in a plant whose quality management system is certified / registered as being in conformity with ISO 9001

HAWKINS • WEIR
ENGINEERS, INC.
Engineering Client Success

MEMORANDUM

To:	Mr. Brian Stewart, Power Systems Territory Manager Riggs Power Systems
From:	Scott McBrayer, P.E.
Re:	41659 Noland WWTP Switchgear Submittal D-16435-001-A
HWEI Project:	Noland WWTP Emergency Paralleling Switchgear
HWEI Project No:	2023055
Date:	October 9, 2025

We have reviewed the referenced submittal and approve for the release to construction, with the following comments:

1) The supplier will provide the automatic control system schematics for CP1/CP2 in a separate submittal.
2) Revise the nomenclature for Emergency mode to Island mode.
3) In addition to the Master Mode Selector Switch, provide a third-party initiation input to the PLC. Either input can initiate Island Mode.
4) During the transfer to Island Mode, if the capacity of the generator plant does not exceed the load on the load bus, add a PLC output to signal the plant SCADA system of this condition, with an operator adjustable time delay setting on the switchgear HMI screen. This feature will delay the shutdown of the generator(s) to allow the plant to shed load and allow the switchgear to enter Island Mode. In the event that this is not accomplished within the time delay, the switchgear will initiate generator shutdown.
5) Delete the side mounted air conditioners for control system CP1/CP2 and replace with forced fan ventilation as required. The control room of the switchgear building will be conditioned space.

END OF MEMO

LSM

CATERPILLAR®

Caterpillar Switchgear Americas, LLC.
4955 Marconi Drive
Alpharetta, GA 30005

Submittal Acknowledgment & Release

This form serves as an official acknowledgment approving and releasing for production the enclosed Submittal of the **Sequence of Operations (SOO)**, **Bill of Materials (BOM)**, and **engineering drawings**. This document must be signed by all relevant parties to confirm their agreement and approval. Additionally, an updated purchase order is necessary to complete the release for production, specifying the effective dates. Delays in receiving the updated purchase order will impact the project timeline and delivery.

Project Information

Project Name: __Noland WWTP_____ Sequence of Operations revision number:_Rev.1

Project Number: _41659_____ Bill of Materials revision number: _Rev. 1____

Engineering drawings revision number: _0.0__

Additional Comments

See attached submittal review memo for requested changes and comments.

Approval

By signing below, parties acknowledge, approve, and release for production the enclosed Submittal Sequence of Operations, Bill of Materials, and engineering drawings per their specified revision numbers listed above:

Release Signature: _____ Date: October 9, 2025

Printed Name: Scott McBrayer, P.E. Title: Project Engineer, Hawkins-Weir Engineers

Release Signature: _____ Date: _____

Printed Name: _____ Title: _____

Caterpillar: Confidential Green

Attachment C: Revised Plan Sheets

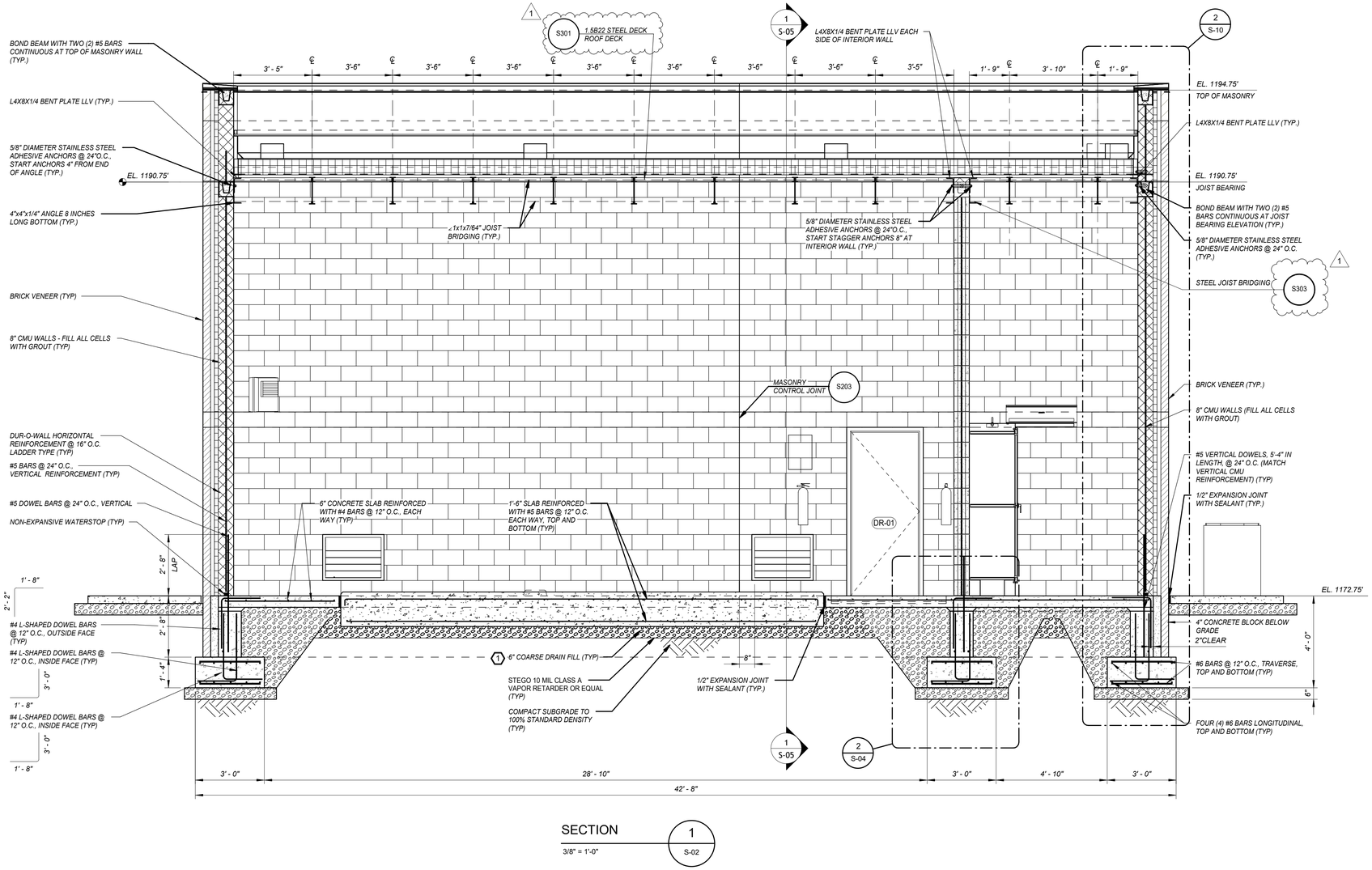

SECTION 1 / S-02
3/8" = 1'-0"

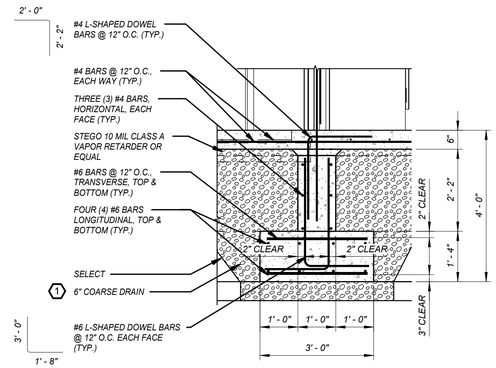

SECTION 2 / S-01
1/2" = 1'-0"

NOTES:

1. REFER TO DETAILS S501 THROUGH S506 ON PLAN SHEET SZ-5 FOR CMU REINFORCEMENT.
2. COORDINATE LOCATION OF VERTICAL CMU REINFORCEMENT TO AVOID CONFLICTS WITH STEEL JOISTS.
3. TWO (2) ROWS OF STEEL JOIST BRIDGING SHALL BE INSTALLED. IN ADDITION, A SINGLE LINE OF STEEL JOIST BOTTOM CHORD BRIDGING SHALL BE PROVIDED NEAR THE FIRST BOTTOM CHORD PANEL POINTS.
4. COORDINATE SIZES AND LOCATIONS OF ROOF EQUIPMENT AND ASSOCIATED OPENINGS WITH ELECTRICAL DRAWINGS AND EQUIPMENT SHOP DRAWINGS. CONFIRM ROOF EQUIPMENT WEIGHTS BEFORE PROCEEDING WITH DESIGN OF STEEL JOISTS.
5. REFER TO ELECTRICAL DRAWINGS FOR LOCATION AND SIZE OF WALL AND/OR SLAB PENETRATIONS. FOR WALL AND/OR SLAB PENETRATIONS GREATER THAN 10 INCHES, REFER TO DETAIL S103.
6. REFER TO SPECIFICATION SECTION 03740 FOR MODIFICATION OR REPAIR OF EXISTING CONCRETE.
7. ALL EXPOSED VERTICAL CONCRETE SURFACES SHALL RECIEVE A RUBBED FINISH.
8. COARSE DRAIN FILL PER ASTM SPECIFICATION C33 (3/4" MAX. AGGREGATE SIZE) SHALL BE PLACED IN MAX. 8" LIFTS AND COMPACTED WITH A VIBRATORY PLATE [MINIMUM OF TWO (2) PASSES].
9. COORDINATE LOCATION OF ALL ELECTRICAL EQUIPMENT HOUSEKEEPING PADS WITH THE ELECTRICAL CONTRACTOR. THE INTENT IS NOT TO CONSTRUCT ANY MORE HOUSEKEEPING PADS THAN ACTUALLY REQUIRED. SUGGEST 4" IN PLAN BEYOND LIMITS OF ELECTRICAL EQUIPMENT TO ARRIVE AT PLAN DIMENSIONS FOR HOUSEKEEPING PADS.

KEYED NOTES:

1 REFER TO NOTE 9

BID SET

1"
ONE INCH AT FULL SIZE
IF NOT ONE INCH SCALE ACCORDINGLY

REVISION	DATE
ADDENDUM NO. 1	4-20-2026

© HAWKINS-WEIR ENGINEERS, INC. 2026

STATE OF ARKANSAS REGISTERED PROFESSIONAL ENGINEER LARRY C. HAWKINS NO. 13205

HAWKINS-WEIR ENGINEERS, INC.
Little Rock (501) 374-4846
Fayetteville (479) 455-2206
Fort Smith (479) 242-4685
Van Buren (479) 474-1227
www.hawkins-weir.com

FAYETTEVILLE, ARKANSAS
NOLAND WASTEWATER TREATMENT PLANT
SWITCHGEAR REPLACEMENT

STRUCTURAL
SECTION

DATE: FEBRUARY 2026
SCALE: As indicated
DESIGNED BY: LCH
DRAWN BY: DKS
HWEI NO.: 2023055
FILENAME: 2023055

SHEET NO.
S-04

4/21/2026 8:41:06 AM / DKS / STRUCTURAL

Autodesk Docs://2023055 NOLAND WWTP SWITCHGEAR REPLACEMENT/2023055.rvt

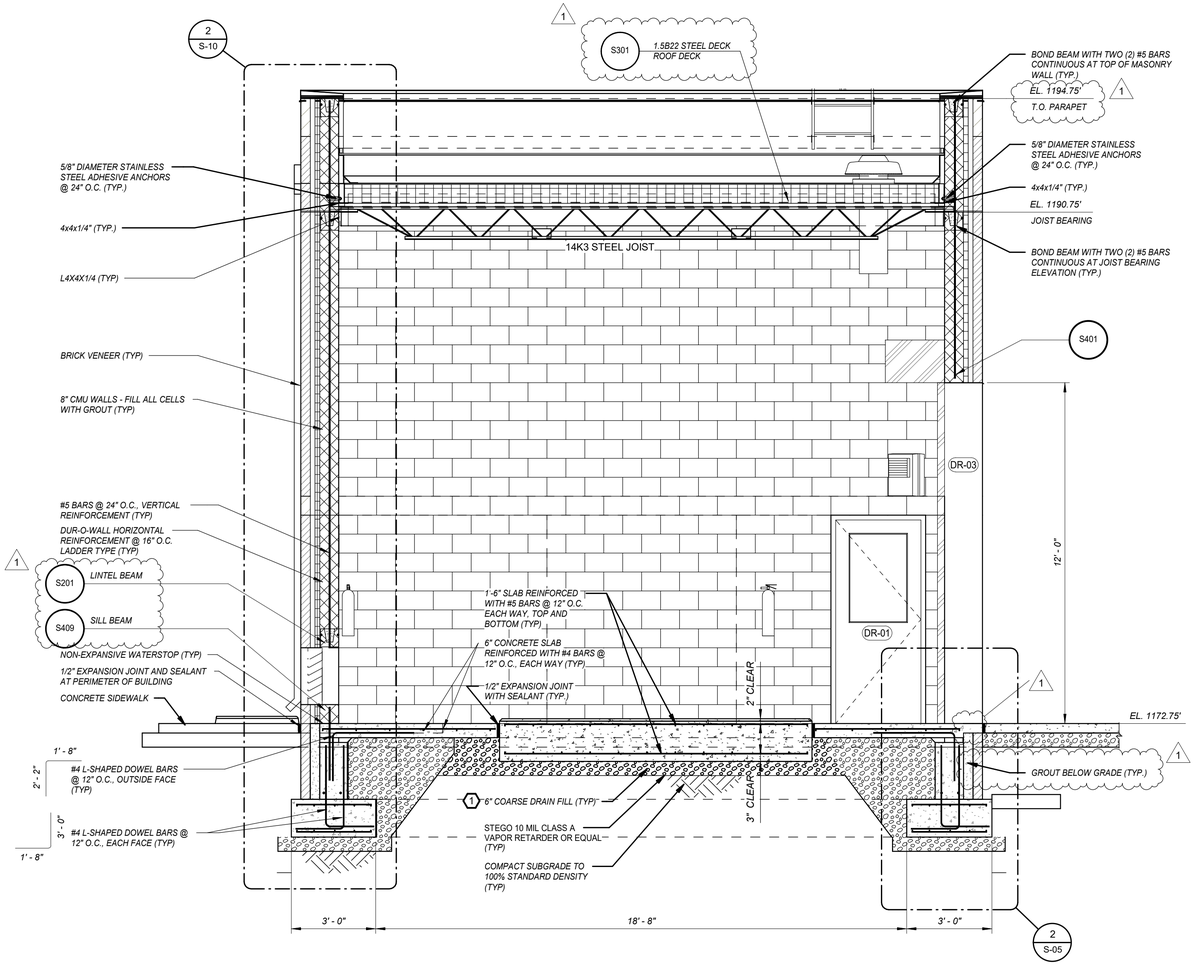

SECTION

3/8" = 1'-0"

1
S-03

NOTES:

1. REFER TO DETAILS S501 THROUGH S506 ON PLAN SHEET SZ-5 FOR CMU REINFORCEMENT.
2. REFER TO ARCHITECTURAL DRAWINGS FOR LOCATION OF ANY MASONRY CONTROL JOINTS.
3. COORDINATE LOCATION OF VERTICAL CMU REINFORCEMENT TO AVOID CONFLICTS WITH STEEL JOISTS.
4. THREE (3) ROWS OF STEEL JOIST BRIDGING SHALL BE INSTALLED. IN ADDITION, A SINGLE LINE OF STEEL JOIST BOTTOM CHORD BRIDGING SHALL BE PROVIDED NEAR THE FIRST BOTTOM CHORD PANEL POINTS.
5. COORDINATE SIZES AND LOCATIONS OF ROOF EQUIPMENT AND ASSOCIATED OPENINGS WITH MECHANICAL DRAWINGS AND EQUIPMENT SHOP DRAWINGS. CONFIRM ROOF EQUIPMENT WEIGHTS BEFORE PROCEEDING WITH DESIGN OF STEEL JOISTS.
6. REFER TO MECHANICAL DRAWINGS FOR LOCATION AND SIZE OF WALL AND/OR SLAB PENETRATIONS. FOR WALL AND/OR SLAB PENETRATIONS GREATER THAN 10 INCHES, REFER TO DETAIL S103.
7. REFER TO SPECIFICATION SECTION 03740 FOR MODIFICATION OR REPAIR OF EXISTING CONCRETE.
8. ALL EXPOSED VERTICAL CONCRETE SURFACES SHALL RECIEVE A RUBBED FINISH.
9. COARSE DRAIN FILL PER ASTM SPECIFICATION C33 (3/4" MAX. AGGREGATE SIZE) SHALL BE PLACED IN MAX. 6" LIFTS AND COMPACTED WITH A VIBRATORY PLATE [MINIMUM OF TWO (2) PASSES].
10. COORDINATE LOCATION OF ALL ELECTRICAL EQUIPMENT HOUSEKEEPING PADS WITH THE ELECTRICAL CONTRACTOR. THE INTENT IS NOT TO CONSTRUCT ANY MORE HOUSEKEEPING PADS THAN ACTUALLY REQUIRED. SUGGEST 4" IN PLAN BEYOND LIMITS OF ELECTRICAL EQUIPMENT TO ARRIVE AT PLAN DIMENSIONS FOR HOUSEKEEPING PADS.

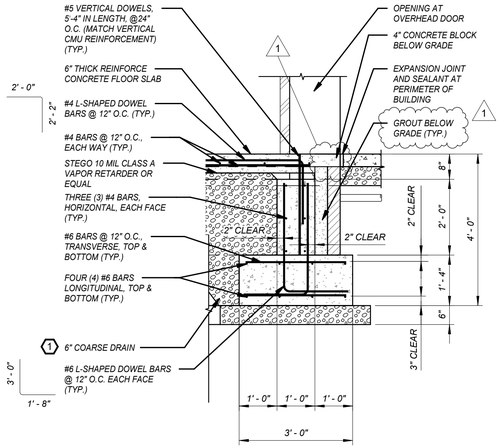

DETAIL

1/2" = 1'-0"

2
S-05

KEYED NOTES:

1 REFER TO NOTE 9.

BID SET

1"

ONE INCH
AT FULL SIZE
IF NOT ONE INCH
SCALE ACCORDINGLY

REVISION	DATE
1 ADDENDUM NO. 1	4-20-2026

© HAWKINS-WEIR ENGINEERS, INC. 2026

ARKANSAS
REGISTERED PROFESSIONAL ENGINEER
LARRY C. HAWKINS
NO. 13205

HAWKINS WEIR ENGINEERS, INC.
Little Rock (501) 374-4846
Fayetteville (479) 455-2206
Fort Smith (479) 242-4685
Van Buren (479) 474-1227
www.hawkins-weir.com

FAYETTEVILLE, ARKANSAS
NOLAND WASTEWATER TREATMENT PLANT
SWITCHGEAR REPLACEMENT

STRUCTURAL
SECTION

DATE: FEBRUARY 2026
SCALE: As indicated
DESIGNED BY: LCH
DRAWN BY: DKS
HWEI NO.: 2023055
FILENAME: 2023055

SHEET NO.
S-05

4/21/2026 8:41:07 AM / DKS / STRUCTURAL

Autodesk Docs://2023055 NOLAND WWTP SWITCHGEAR REPLACEMENT/2023055.rvt

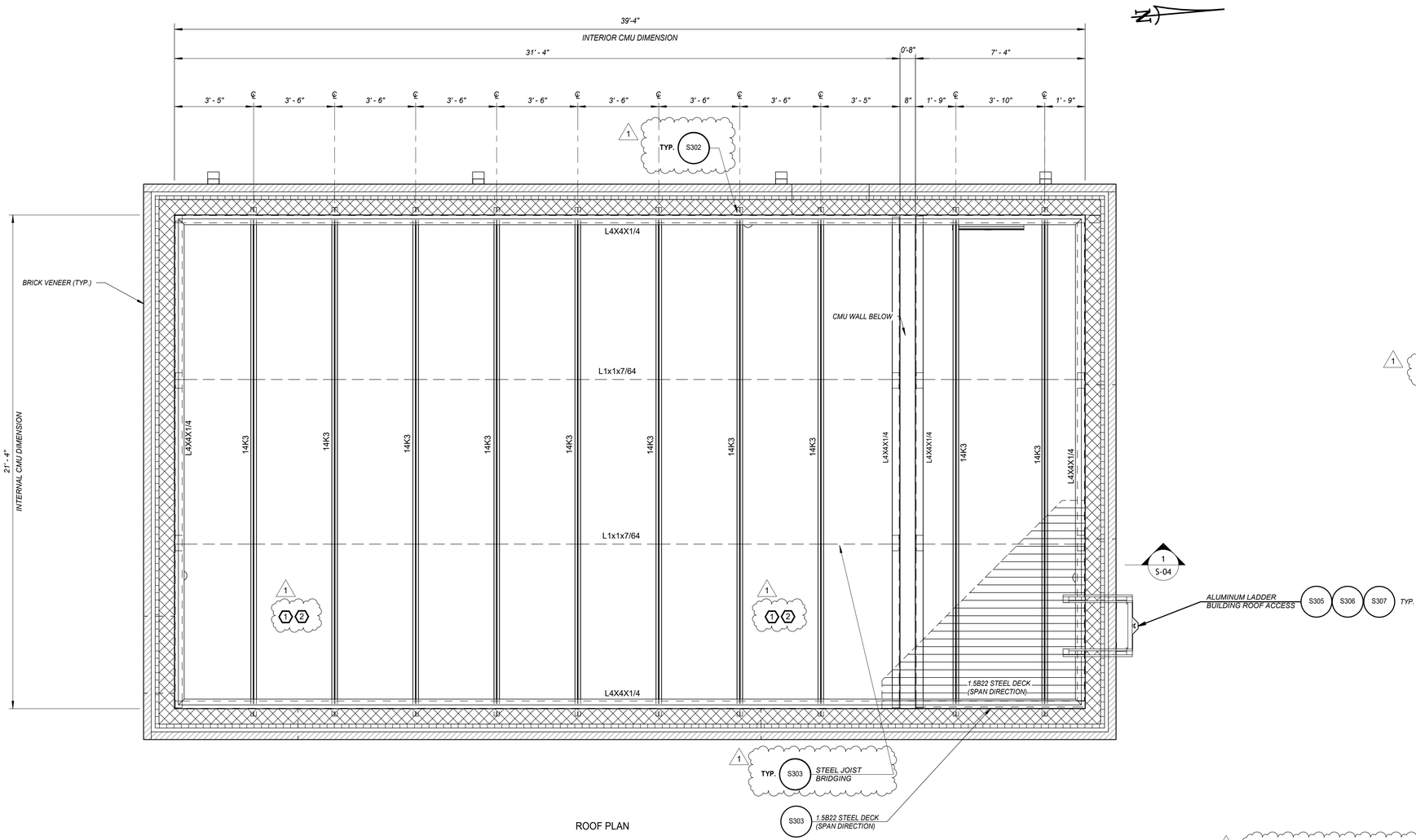

ROOF PLAN

DETAIL D — 3/8" = 1'-0" — E-06

NOTES:

1. *REFER TO DETAILS S501 THROUGH S506 ON PLAN SHEET SZ-5 FOR CMU REINFORCEMENT.*
2. *REFER TO ARCHITECTURAL DRAWINGS FOR LOCATION OF ANY MASONRY CONTROL JOINTS.*
3. *COORDINATE LOCATION OF VERTICAL CMU REINFORCEMENT TO AVOID CONFLICTS WITH STEEL JOISTS.*
4. *STEEL JOIST MANUFACTURER SHALL DESIGN JOISTS FOR THE FOLLOWING UNFACTORED LOADS:*
5. *TWO (2) ROWS OF STEEL JOIST BRIDGING SHALL BE INSTALLED. IN ADDITION, A SINGLE LINE OF STEEL JOIST BOTTOM CHORD BRIDGING SHALL BE PROVIDED NEAR THE FIRST BOTTOM CHORD PANEL POINTS.*
6. *COORDINATE SIZES AND LOCATIONS OF ROOF EQUIPMENT AND ASSOCIATED OPENINGS WITH MECHANICAL DRAWINGS AND EQUIPMENT SHOP DRAWINGS. CONFIRM ROOF EQUIPMENT WEIGHTS BEFORE PROCEEDING WITH DESIGN OF STEEL JOISTS. REFER TO KEYED NOTES 3 THROUGH 7 FOR HVAC ROOFTOP EQUIPMENT WEIGHT.*
7. *REFER TO MECHANICAL DRAWINGS FOR LOCATION AND SIZE OF WALL AND/OR SLAB PENETRATIONS. FOR WALL AND/OR SLAB PENETRATIONS GREATER THAN 10 INCHES, REFER TO DETAIL S103.*

KEYED NOTES:

1. *ADDITIONAL ROOF FRAMING IS REQUIRED AT ALL HVAC ROOF PENETRATIONS PER DETAIL S604.*
2. *COORDINATE LOCATION OF ALL STEEL JOIST BRIDGING TO AVOID CONFLICTS WITH HVAC ROOF PENETRATIONS.*
3. *LOW SLOPE ROOF CONSISTS OF MODIFIED BITUMEN ROOF ON 1/2" COVER BOARD WITH 4" MIN. TAPERED POLYISO INSULATION ON A METAL DECK*

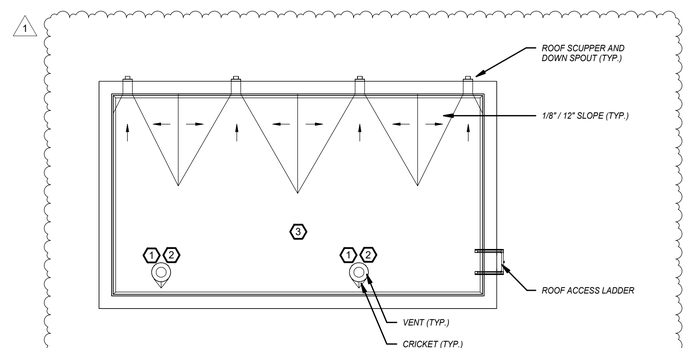

ROOF RIDGE
AND VALLEY PLAN

DETAIL I — 1/8" = 1'-0"

BID SET

1"
ONE INCH
AT FULL SIZE
IF NOT ONE INCH
SCALE ACCORDINGLY

REVISION	DATE
1 ADDENDUM NO. 1	4-20-2026

© HAWKINS-WEIR ENGINEERS, INC. 2026

ARKANSAS REGISTERED PROFESSIONAL ENGINEER LARRY C. HAWKINS NO. 13205

HAWKINS-WEIR ENGINEERS, INC.
Little Rock (501) 374-4846
Fayetteville (479) 455-2206
Fort Smith (479) 242-4685
Van Buren (479) 474-1227
www.hawkins-weir.com

FAYETTEVILLE, ARKANSAS
NOLAND WASTEWATER TREATMENT PLANT
SWITCHGEAR REPLACEMENT

ROOF FRAMING
DETAIL

DATE:	FEBRUARY 2026
SCALE:	As indicated
DESIGNED BY:	LCH
DRAWN BY:	DKS
HWEI NO.:	2023055
FILENAME:	2023055

SHEET NO.
S-06

4/21/2026 9:03:02 AM / DKS / ROOF FRAMING

Autodesk Docs://2023055 NOLAND WWTP SWITCHGEAR REPLACEMENT/2023055.rvt

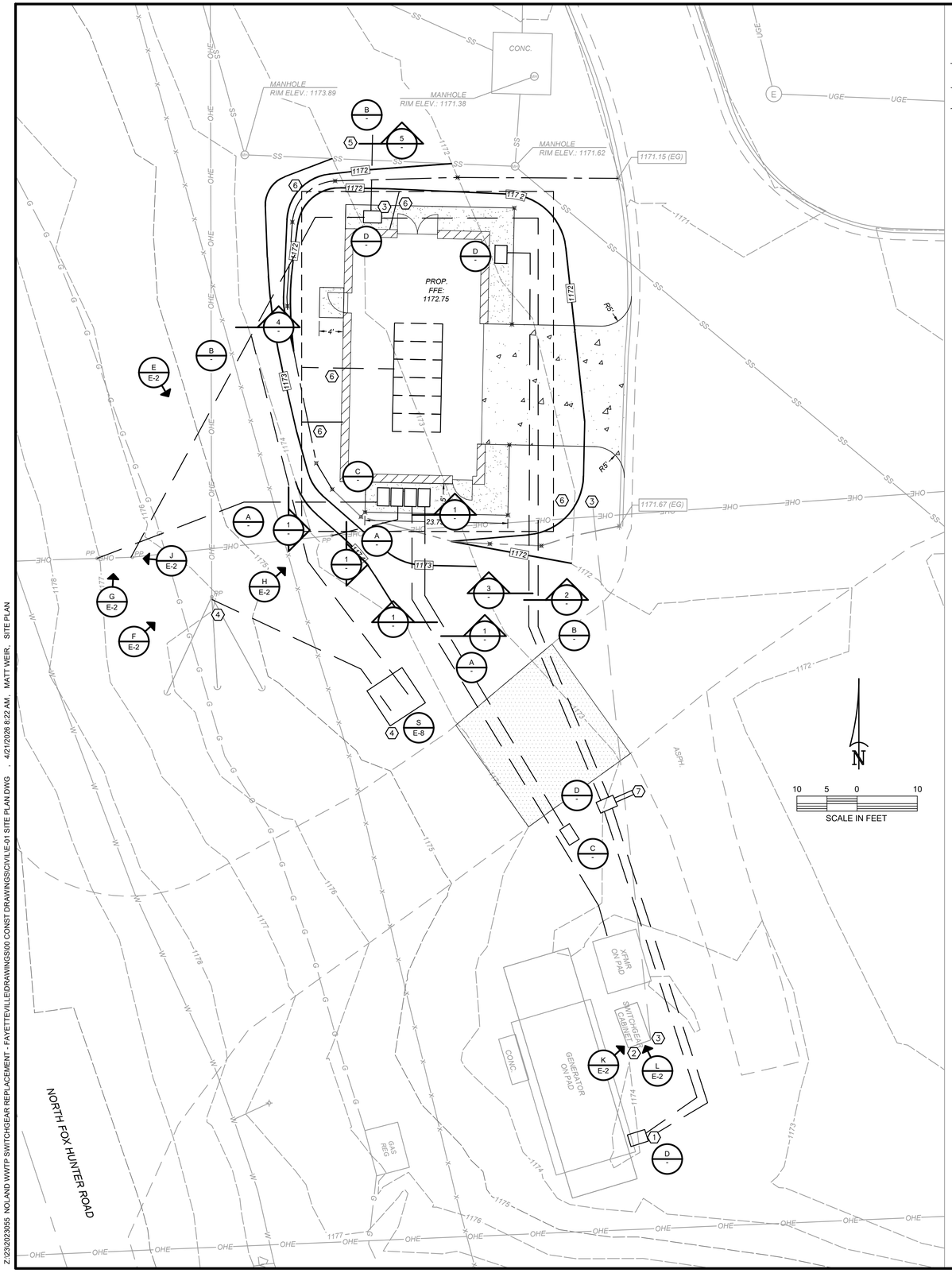

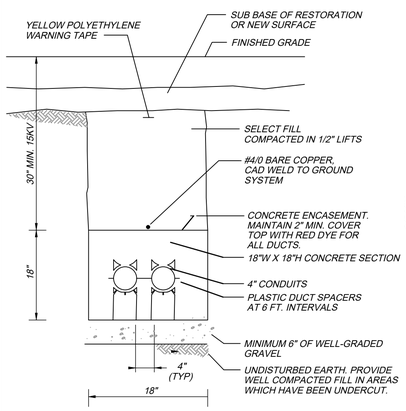

PRIMARY CONCRETE ENCASED DUCTBANK

DETAIL A — NTS

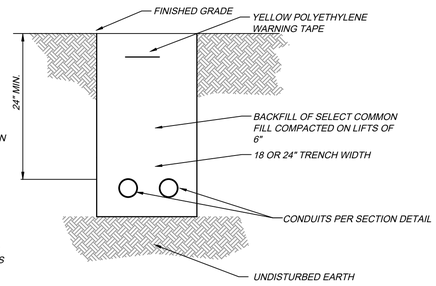

DIRECT BURIAL DUCTBANK

DETAIL B — NTS

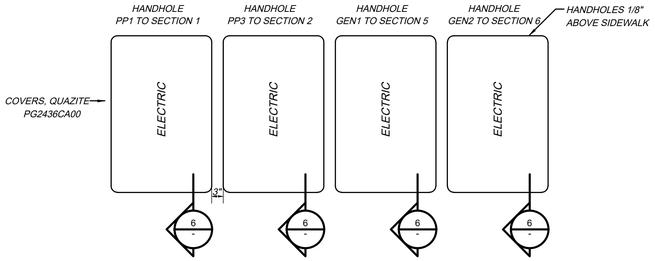

15KV ELECTRICAL HANDHOLES

DETAIL C — NTS

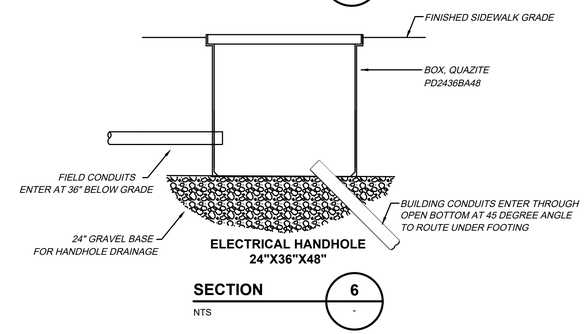

ELECTRICAL HANDHOLE 24"X36"X48"

SECTION 6 — NTS

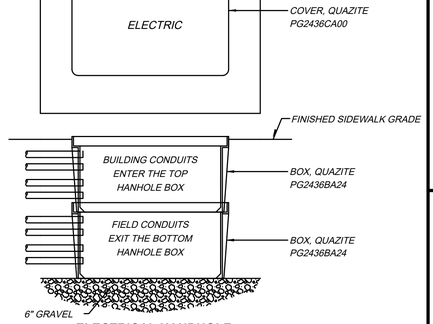

ELECTRICAL HANDHOLE 24"X36" STACKED

DETAIL D — NTS

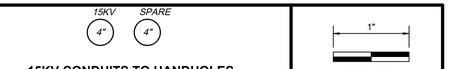

15KV CONDUITS TO HANDHOLES CONCRETE ENCASED DUCTBANK

SECTION 1 — NTS

PANEL PP TO GEN 1 & 2 POWER DIRECT BURIAL DUCTBANK

SECTION 2 — NTS

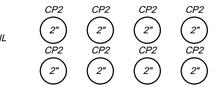

CP2 TO GEN 1 & 2 CONTROLS DIRECT BURIAL DUCTBANK

SECTION 3 — NTS

BUILDING POWER/RECLOSER CONTROLS DIRECT BURIAL DUCTBANK

SECTION 4 — NTS

FUTURE POWER AND FIBER TO PLANT DIRECT BURIAL DUCTBANK

SECTION 5 — NTS

KEYED NOTES:

1. LOCATE AND INTERCEPT EXISTING POWER AND CONTROL CONDUITS BETWEEN THE EXISTING SWITCHGEAR AND GENERATOR. PROVIDE AND INSTALL THE ELECTRICAL HANDHOLE TO TRANSITION THE PROPOSED CONDUITS AND EXISTING CONDUITS FOR POWER AND CONTROL CONDUITS FROM THE EXISTING GENERATOR TO THE SWITCHGEAR BUILDING.
2. EXISTING PARALLELING SWITCHGEAR TO BE REPLACED BY THE DUAL PURPOSE DOCKING STATION. SEE SPECIFICATIONS.
3. LOCATE EXISTING FIBER OPTIC CABLE RACEWAY ROUTE. UNCOVER AND MODIFY RACEWAY TO ROUTE FIBER INTO THE SWITCHGEAR BUILDING THROUGH THE ELECTRICAL HANDHOLE.
4. PROVIDE AND INSTALL A PAD MOUNT 150KVA 12470V X 277/480V THREE PHASE TRANSFORMER, FUSIBLE CUT OUT SWITCHES, AND ALL NECESSARY COMPONENTS AT POWER POLE PP4 FOR THREE PHASE POWER TO THE SWITCHGEAR BUILDING. PROVIDE AND INSTALL THREE (3) LOAD BREAK ELBOWS FOR CABLE INSTALLATION AT THE TRANSFORMER. PROVIDE AND INSTALL THE TRANSFORMER CONCRETE PAD PER DETAIL ON SHEET E-08. SEE THE BUILDING RISER DIAGRAM ON SHEET E-08 FOR MORE DETAIL.
5. STUB-OUT CONDUITS FOR CONNECTION TO FUTURE PLANT EXPANSION.
6. INSTALL A #4/0 BARE COPPER GROUND RING AROUND THE BUILDING. INSTALL A #4 CADWELD TAP FROM THE GROUND RING TO PANEL PP. INSTALL A #4/0 CADWELD TAP TO THE FOOTING REBAR. INSTALL A #4/0 CADWELD TAP THROUGH A 1" CONDUIT TO THE SWITCHGEAR GROUND BUS.
7. STUB-OUT FOUR (4) 2" CONDUITS FOR FUTURE CONNECTIONS TO GENERATOR #2.

GENERAL NOTES:

1. EXTERIOR UNDERGROUND CONDUIT SHALL BE PVC SCHEDULE 40.
2. EXTERIOR 15KV RISER CONDUITS AND TRANSITION SHALL BE PVC SCHEDULE 80.
3. INTERIOR CONDUIT SHALL BE SURFACE MOUNTED EMT. NO CONDUIT SHALL BE INSTALLED INSIDE THE BLOCK WALL.
4. INTERIOR BOXES MAY BE FOUR SQUARE STEEL IN THE JOIST OVERHEAD SPACE FOR LIGHTING CIRCUITS. INTERIOR BOXES SHALL BE CAST ALUMINUM FS/FD FOR RECEPTACLES AND SWITCHES.
5. CONDUIT SWEEPS AND STUB-UPS INTO FREE STANDING SWITCHGEAR AND CONTROL PANELS SHALL BE PVC SCHEDULE 40. 15KV CIRCUIT PVC SWEEPS SHALL BE 36" RADIUS MINIMUM.
6. EXPOSED CONDUIT SWEEPS AND STUB-UPS TO ABOVE GRADE EQUIPMENT SHALL BE PVC COATED RIGID STEEL.
7. 15KV CABLE TESTING REQUIREMENTS: PRE-TEST: PERFORM A VISUAL INSPECTION OF THE CABLE PRIOR TO INSTALLATION AND ENSURE THE CONCENTRIC NEUTRAL IS CONTINUOUS. ELECTRICAL TESTS: USE A 5KV OR 10KV MEGOHMETER TO MEASURE THE RESISTANCE BETWEEN EACH PHASE AND GROUND TO ENSURE THE INSULATION WAS NOT DAMAGED DURING INSTALLATION. USE A VERY LOW FREQUENCY WITHSTAND TEST (VLF) FOR 30 MINUTES, OR A DC HI-POT TEST TO VERIFY INSULATION INTEGRITY. GROUND AND DISCHARGE AS NECESSARY DURING TESTING TO DISCHARGE VOLTAGE. RECORD RESULTS AS A BASELINE FOR FUTURE MAINTENANCE AND PROVIDE TO THE ENGINEER.

BID SET

ONE INCH
AT FULL SIZE
IF NOT ONE INCH
SCALE ACCORDINGLY

REVISION	DATE
ADDENDUM NO. 1	4-20-2026

© HAWKINS-WEIR ENGINEERS, INC. 2026

HAWKINS WEIR ENGINEERS, INC.
Fort Smith (479) 242-4685
Fayetteville (479) 455-2206
Little Rock (501) 374-4846
Van Buren (479) 474-1227
www.hawkins-weir.com

FAYETTEVILLE, ARKANSAS
NOLAND WASTEWATER TREATMENT PLANT
SWITCHGEAR REPLACEMENT

ELECTRICAL SITE PLAN

DATE:	MARCH 2026
SCALE:	1"=10'
DESIGNED BY:	LSM
DRAWN BY:	LSM
HWEI NO.:	2023055
FILENAME:	E-01 SITE PLAN

SHEET NO.
E-01

Z:\2023\2023055 NOLAND WWTP SWITCHGEAR REPLACEMENT - FAYETTEVILLE\DRAWINGS\00 CONST DRAWINGS\CIVIL\E-01 SITE PLAN.DWG , 4/21/2026 8:22 AM, MATT WEIR,

CITY OF FAYETTEVILLE ARKANSAS

CITY COUNCIL MEMO
2026-1796

MEETING OF JUNE 16, 2026

TO: Mayor Rawn and City Council

THROUGH: Keith Macedo, Chief of Staff

FROM: Tim Nyander, Utilities Director

SUBJECT: **Hawkins-Weir Engineers, Inc. - Amendment No. 1 for Noland WWTP Switchgear**

RECOMMENDATION:
Staff recommends approval of Amendment No. 1 to the engineering services agreement with Hawkins-Weir Engineers, Inc. for professional services associated with the Noland WRRF Primary Switchgear Improvements Project in an amount not to exceed $195,220.00.

BACKGROUND:
The primary electrical feed to the Noland Water Resource Recovery Facility (WRRF) has been identified as a concern for reliability of keeping the plant in-power continuously. This is primarily due to the arrangement of high voltage breakers and the WRRF's tie-in to both grid-power and standby generator power. Hawkins-Weir Engineers was selected via RFQ# 24-01, Selection #8 to provide these professional services.

DISCUSSION:
The Noland WRRF Primary Switchgear Improvements Project began with a non-agenda agreement with Hawkins-Weir in the amount of $19,900.00. Resolution 179-24 approved what the City referred to as "Amendment No. 1" at the time, but it was actually a new agreement for Noland Switchgear engineering services in the amount of $155,500.00 to bring the project to 100% design and bidding.

Design and bidding are complete, and the project is ready to move into construction. This proposed amendment in the amount of $195,220.00 will be Amendment No. 1 to provide necessary funds for Hawkins-Weir to be involved with project administration, construction observation, engineering oversight, final inspections and system start-up.

Staff recommends approval of Amendment No. 1 to the engineering services agreement with Hawkins-Weir Engineers, Inc. for professional services associated with the Noland WRRF Primary Switchgear Improvements Project in an amount not to exceed $195,220.00.

BUDGET/STAFF IMPACT:
Funds are available in the WWTP Building Improvements account.

ATTACHMENTS: 3. Staff Review Form, 4. Amendment No. 1

113 West Mountain Street
Fayetteville, AR 72701
(479) 575-8323

File #: 2026-1796

A RESOLUTION TO APPROVE AMENDMENT NO. 1 TO THE PROFESSIONAL ENGINEERING SERVICES AGREEMENT WITH HAWKINS-WEIR ENGINEERS, INC. IN AN AMOUNT NOT TO EXCEED $195,220.00 FOR ADDITIONAL SERVICES ASSOCIATED WITH THE NOLAND WATER RESOURCE RECOVERY FACILITY PRIMARY SWITCHGEAR IMPROVEMENTS PROJECT.

WHEREAS, the primary electrical feed to the Noland Water Resource Recovery Facility (WRRF) has been identified as a concern for reliability of keeping the plant in power continuously, primarily due to the arrangement of high-voltage breakers and the WRRF's tie in to both grid-power and standby generator power; and

WHEREAS, design and bidding are complete, and the project is ready to move into construction, and this amendment provides for additional services including project administration, construction observation, engineering oversight, final inspections and system start-up.

NOW, THEREFORE, BE IT RESOLVED BY THE CITY COUNCIL OF THE CITY OF FAYETTEVILLE, ARKANSAS:

Section 1: That the City Council of the City of Fayetteville, Arkansas hereby authorizes Mayor Rawn to sign Amendment No. 1 with Hawkins-Weir Engineers, Inc. in an amount not to exceed $195,220.00 for additional services associated with the Noland Water Resource Recovery Facility Primary Switchgear Improvements Project.

City of Fayetteville Staff Review Form

2026-1796

Item ID

6/16/2026

City Council Meeting Date - Agenda Item Only
N/A for Non-Agenda Item

Tim Nyander	5/21/2026	WASTEWATER TREATMENT (730)
Submitted By	**Submitted Date**	**Division / Department**

Action Recommendation:

Staff recommends approval of Amendment No. 1 to the engineering services agreement with Hawkins-Weir Engineers, Inc. for professional services associated with the Noland WRRF Primary Switchgear Improvements Project in an amount not to exceed $195,220.00.

Budget Impact:

540.730.5800-5314.00	Water & Sewer
Account Number	Fund
02032.1	WWTP Building Improvements
Project Number	Project Title

Budgeted Item?	Yes	Total Amended Budget	$	7,454,066.00
		Expenses (Actual+Encum)	$	7,114,976.45
		Available Budget	$	**339,089.55**
Does item have a direct cost?	Yes	Item Cost	$	195,220.00
Is a Budget Amendment attached?	No	Budget Amendment	$	-
		Remaining Budget	$	**143,869.55**

Purchase Order Number: 2023-521

Previous Ordinance or Resolution # 179-24

Change Order Number: 1

Approval Date:

Original Contract Number: 2024-00000036

Comments:

AMENDMENT NO. 1

TO THE

AGREEMENT For PROFESSIONAL ENGINEERING SERVICES

BETWEEN

CITY OF FAYETTEVILLE, ARKANSAS

AND

HAWKINS-WEIR ENGINEERS, INC.

In accordance with the AGREEMENT For PROFESSIONAL ENGINEERING SERVICES for the **Noland WWTP Switchgear Replacement (HW Project No. 2023055),** dated July 2, 2024, between the City of Fayetteville, Arkansas (hereinafter called **Owner**) and Hawkins-Weir Engineers, Inc. (hereinafter called **Engineer**), Owner hereby authorizes Engineer to proceed with engineering services as modified by this Amendment No. 1.

SECTION 1 – SCOPE OF SERVICES

1.1 Amendment No. 1 is for construction phase services for the Noland WWTP Switchgear Replacement associated with Owner's Project No. 26-30. Services are detailed in the Engineer's attached Scope of Services dated May 4, 2026.

SECTION 2 – TIME OF SERVICE

2.1 The scope of services as defined above is based on addressing the defined services within a 270-calendar day construction Contract Time in 2026 for the Owner's Project No. 26-30. Engineer will proceed with providing the services set forth herein immediately upon execution of this Authorization by all parties.

SECTION 3 – COMPENSATION

3.1 Owner shall compensate Engineer for providing the services set forth herein in accordance with the terms of the Agreement. Total payment for Scope of Services described herein shall not exceed One Hundred Ninety-Five Thousand Two Hundred Twenty and 00/100 Dollars ($195,220.00) without written approval of Owner. These additional services adjust the Agreement's not to exceed fee to **$336,220.00,** and adjusts the not to exceed reimbursable expenses to $14,500.00 for a total not to exceed fee of $350,720.00.

Attachments: Scope of Services dated May 4, 2026
Fee Proposal dated May 4, 2026
2026 Standard Hourly Billing Rate Structure
Certificate of Liability Insurance (2 Pages)

AUTHORIZATION BY:

CITY OF FAYETTEVILLE, ARKANSAS

By:_____
Honorable Mollie Rawn, Mayor

Date:_____

ACCEPTED BY:

HAWKINS-WEIR ENGINEERS, INC.

By: Barry K. McCormick
Barry K. McCormick, P.E.
Secretary

Date: 5/14/2026

Appendix A
Scope of Services
Amendment No. 1
Noland WWTP Switchgear Replacement
City of Fayetteville, Arkansas
HW Project No. 2023055
May 4, 2026

Hawkins-Weir Engineers, Inc. (HW) proposes to provide the following construction phase services for the Noland WWTP Switchgear Replacement project:

Task Description

D. Construction Phase – Noland WWTP Switchgear Replacement

1. Conduct Pre-Construction Conference with the Owner and Contractor
    a. Field Survey to reestablish control monumentation
2. Provide periodic observation during construction(1)
3. Conduct up to two (2) progress meetings
4. Prepare, review, and coordinate the dissemination of construction documentation including material submittals, testing results, field orders, and change orders as directed by the Owner
5. Review the Contractor's constructed quantities and prepare monthly pay requests for the Owner's approval
6. Conduct as-built surveys of completed improvements
7. Participate in Factory Witness Test at Caterpillar in Alpharetta, Georgia, coordinate and assist with switchgear startup testing on site
8. Coordinate and conduct a final inspection with the Contractor and the Owner, and prepare a punch list of deficient construction items for the Contractor to address
9. Prepare Record Drawings of the completed project and provide one (1) reproducible hard copy and one (1) electronic copy for the Owner's archives

(1) Based on a 270-calendar day Contract Time (240-calendar days until Substantial Completion). Periodic construction observation is based on 8-hours per day (Monday through Friday) during the construction of the below grade improvements (assumed at 30-calendar days) and approximately 2-hours per day (Monday through Friday) for the remaining site construction period (assumed 240-calendar days) through Final Completion date for the Construction Observer.

Amendment No. 1 - Fee Proposal
Noland WWTP Switchgear Improvements
City of Fayetteville, Arkansas
Project No. 2023055
May 4, 2026

D. Construction Phase - Noland WWTP Switchgear Replacement

Task	Engr VII $275	Engr VI $250	Engr I $125	Observer III $120	Surveyor $175	Tech III $135	BIM III $135	GPS Survey $200	Admin. $75	Total Hours	Total Cost
1. Conduct Pre-Construction Conference with the Owner and Contractor	6	10	4	2					2	24	$5,040
a) Field survey to reestablish control monumentation					4			4		8	$1,500
2. Provide periodic observation during construction [(1)]	40	40	40	500						620	$86,000
3. Conduct up to two (2) progress meetings	8	8	8	4					6	34	$6,130
4. Prepare, review, and coordinate the dissemination of construction documentation including material submittals, testing results, field orders, and change orders as directed by the Owner	16	46	24	8			8		16	118	$22,140
5. Review the Contractor's constructed quantities and prepare monthly pay requests for the Owner's approval	20	40							8	68	$16,100
6. Conduct as-built surveys of completed improvements		4		8	4			4		20	$3,460
7. Participate in Factory Witness Test at Caterpillar in Alpharetta, Georgia, coordinate and assist with switchgear startup testing on site	120		60							180	$40,500
8. Coordinate and conduct a final inspection with the Contractor and the Owner, and prepare a punch list of deficient construction items for the Contractor to address	4	8	4	4					4	24	$4,380
9. Prepare record drawings of the completed project and provide one (1) reproducible hard copy and one (1) electronic copy for the Owner's archives	6	4		4		8	16	4	4	46	$7,470
TOTAL HOURS =	220	160	140	530	8	8	24	12	40	1,142	
SUBTOTAL COST =	$60,500	$40,000	$17,500	$63,600	$1,400	$1,080	$3,240	$2,400	$3,000	---------->	$192,720

(1) Based on a 270-calendar day Contract Time (240-calendar days until substantial completion).
Periodic construction observation is based on 8-hours per day (Monday through Friday) during the construction of the below grade improvements (assumed at 30-calendar days) and approximately 2-hours per day (Monday through Friday) for the remaining site construction period (assumed 240-calendar days) through final completion date for the Construction Observer.

E. Reimbursable Expenses

	Item	Description	Total
1.	Travel for Factory Witness Test (HW Personnel only)	Caterpillar Factory Test	$2,500
			$2,500

Engineering Services Summary

D.	Construction Phase - Noland WWTP Switchgear Replacement	$192,720
E.	Reimbursable Expenses	$2,500
	Total Engineering Fee - Not To Exceed	**$195,220**

Hawkins-Weir Engineers, Inc.

Hourly Rate Schedule: 2026

Description	Billing Rate/Hour
Engineer VII	$275
Engineer VI	$250
Engineer V	$225
Engineer IV	$200
Engineer III	$175
Engineer II	$150
Engineer I	$125
Environmental Specialist II	$130
Environmental Specialist I	$110
Designer III	$145
Designer II	$135
Designer I	$120
Civil Eng. Assistant I	$100
Civil Eng. Assistant II	$90
Digital Design Manager	$150
BIM Modeler III	$145
BIM Modeler II	$135
BIM Modeler I	$125
CAD/GIS Technician III	$135
CAD/GIS Technician II	$125
CAD/GIS Technician I	$115
Construction Manager II	$150
Construction Manager I	$130
Construction Observer IV	$140
Construction Observer III	$120
Construction Observer II	$110
Construction Observer I	$100
Surveyor	$175
GPS Survey	$200
Survey Technician	$50
Business Manager	$100
Graphic Designer	$100
Administrative	$75

Reimbursable Expenses	
Mileage	$0.77/mile
Printing	@ Cost
Travel	@ Cost
Expert Witness	Rate x 2.0
Other Direct Costs	@ Cost

Notes:

1. Hourly rates may be equitably adjusted
2. Adjustment to rate schedule will not change contract lump sum or NTE amounts
3. If a conflict exists, hourly rates & reimbursable expenses will be invoiced per terms of Agreement.

CITY OF FAYETTEVILLE ARKANSAS

CITY COUNCIL MEMO
2026-1681

MEETING OF JUNE 16, 2026

TO: Mayor Rawn and City Council

THROUGH: Ted Jack, Park Planning Superintendent
Alison Jumper, Director of Parks, Natural Resources and Cultural Affairs
Keith Macedo, Chief of Staff

FROM: Ted Jack, Park Planning Superintendent

SUBJECT: **Kessler Phase 3 Improvements - Design Contract**

RECOMMENDATION:
Staff recommends entering into a contract with Garver LLC to provide design and construction administration services, pursuant to RFQ 26-01, Selection #6, for Kessler Phase 3 Improvements including: soccer field and other improvements at Kessler Mountain Regional Park for a fee not to exceed $373,000.00, plus a $27,000 project contingency.

BACKGROUND:
Kessler Mountain Regional Park is the primary location to host soccer games and tournaments. Kessler currently has seven full-sized soccer fields which can be divided into smaller, age-appropriate fields. Six of the seven soccer fields are lighted. All soccer fields are natural turf.

An onsite sewer treatment facility that has served the park will soon be removed and the park will be connected to the city sewer system allowing the area to be converted to additional field space.

Garver LLC was selected as a contractor through RFQ 26-01, Selection #6.

DISCUSSION:
The work includes designing an additional full-sized lighted artificial turf soccer field, improvements to an existing field including lighting, drainage improvements, shaded bleachers for the artificial turf field, sidewalk improvements, landscaping, parking improvements and any necessary environmental permitting.

Garver has worked on all previous phases of construction for Kessler with good results. This continues their work creating bid documents for improvements and includes bidding and construction administration services.

BUDGET/STAFF IMPACT:
Funding for this project is through the 2024 Bond funds and Parkland Dedication funds.

SOURCE	GL ACCOUNT	PROJECT	AMOUNT
2024 Bond	4805.860.7502-5860.02	46050.7502.4000	$273,000.00

Parkland Dedication (PLD)	2250.520.9256-5860.02	46050.7502.4000	$100,000.00
Contingency (PLD)	2250.520.9256-5911.99	46050.7502.4000	$27,000.00

ATTACHMENTS: 3. Staff Review Form, 4. Kessler Soccer Improvements City Council Presentation, 5. Garver Contract and Scope of Services, 6. RFQ 26-01, Selection 6 - Final Vote, 7. RFQ 26-01, Submittal - Garver, LLC - E

113 West Mountain Street
Fayetteville, AR 72701
(479) 575-8323

File #: 2026-1681

A RESOLUTION TO AWARD RFQ #26-01 SELECTION #6 AND AUTHORIZE A CONTRACT WITH GARVER, LLC IN AN AMOUNT NOT TO EXCEED $373,000.00 TO PROVIDE DESIGN AND CONSTRUCTION ADMINISTRATION SERVICES FOR KESSLER MOUNTAIN REGIONAL PARK PHASE 3 IMPROVEMENTS, AND TO APPROVE A PROJECT CONTINGENCY IN THE AMOUNT OF $27,000.00

BE IT RESOLVED BY THE CITY COUNCIL OF THE CITY OF FAYETTEVILLE, ARKANSAS:

Section 1: That the City Council of the City of Fayetteville, Arkansas hereby awards RFQ #26-01 Selection #6 and authorizes a contract with Garver, LLC in an amount not to exceed $373,000.00 to provide design and construction administration services for Kessler Mountain Regional Park Phase 3 Improvements, and further approves a project contingency in the amount of $27,000.00.

City of Fayetteville Staff Review Form

2026-1681

Item ID

6/16/2026

City Council Meeting Date - Agenda Item Only
N/A for Non-Agenda Item

Zach Foster	5/19/2026	PARKS & RECREATION (520)
Submitted By	**Submitted Date**	**Division / Department**

Action Recommendation:

Staff recommends entering into a contract with Garver LLC to provide design and construction administration services for Kessler Phase 3 Improvements including: soccer field and other improvements at Kessler Mountain Regional Park for a fee not to exceed $373,000.00, plus a $27,000 project contingency.

Budget Impact:

4805.860.7502-5860.02 2250.520.9256-5860.02	Parks Projects 2024 Bonds Parks Development
Account Number	Fund
46050.7502.4000	Kessler Phase 3 Improvements
Project Number	Project Title

Budgeted Item?	Yes	Total Amended Budget	$	9,216,776.00
		Expenses (Actual+Encum)	$	7,260,585.41
		Available Budget	$	1,956,190.59
Does item have a direct cost?	Yes	Item Cost	$	373,000.00
Is a Budget Adjustment attached?	No	Budget Adjustment	$	-
		Remaining Budget	$	1,583,190.59

V20221130

Purchase Order Number: _____

Previous Ordinance or Resolution # _____

Change Order Number: _____

Approval Date: _____

Original Contract Number: _____

Comments:

Existing Conditions

Existing Conditions

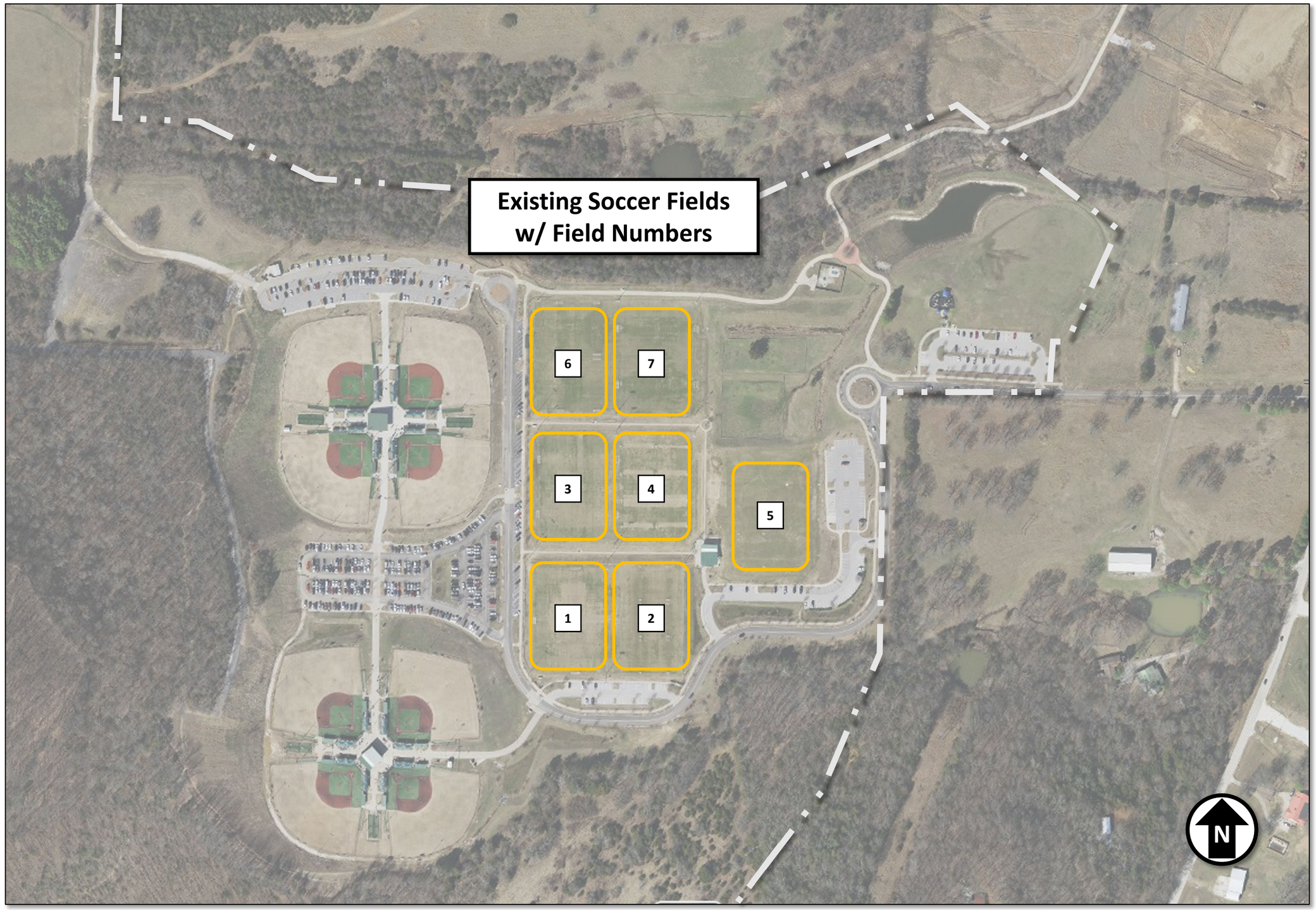

PROPOSED
IMPROVEMENTS
6
7
3
4
5
1
2
N

Proposed Improvements

- Full-sized soccer field w/ artificial turf
- Possible small soccer field (natural turf)
- Lighting for two fields
- Bleachers w/ shade
- Sidewalks
- Drainage
- Landscaping
- Parking

Benefits

- Additional field space
- Championship Field
- Lighting additional hours of play
- Artificial turf for play after inclement weather
- More Parking

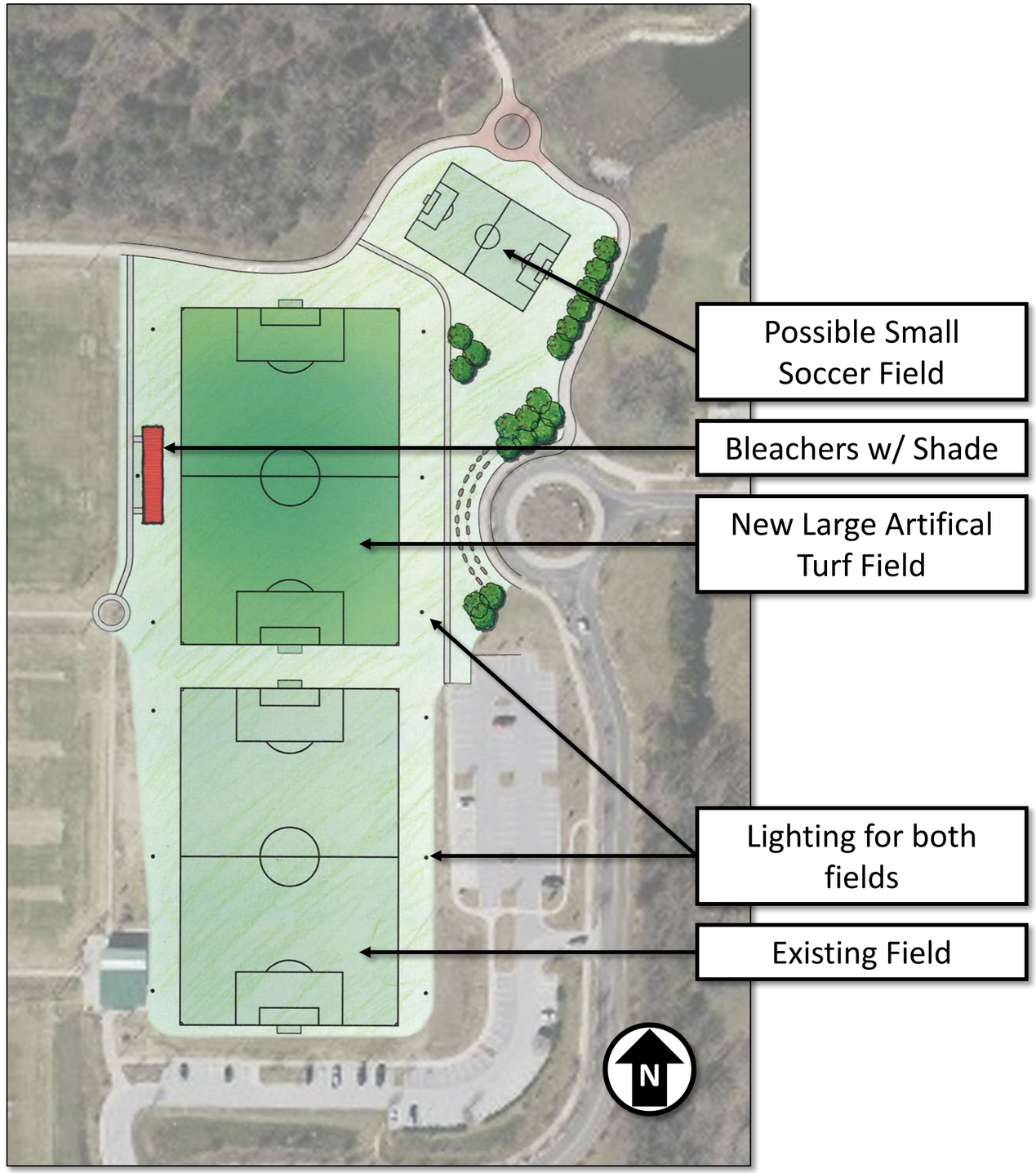

<u>Kessler</u>
Proposed Improvements

Work will include adding some parking

AGREEMENT
For
PROFESSIONAL ENGINEERING SERVICES
Between
CITY OF FAYETTEVILLE, ARKANSAS
And
GARVER, LLC

THIS AGREEMENT is made as of _____, 2026, by and between City of Fayetteville, Arkansas, acting by and through its Mayor (hereinafter called CITY OF FAYETTEVILLE) and GARVER, LLC (hereinafter called ENGINEER).

CITY OF FAYETTEVILLE from time to time requires professional engineering services in connection with the evaluation, design, and/or construction supervision of capital improvement projects. Therefore, CITY OF FAYETTEVILLE and ENGINEER in consideration of their mutual covenants agree as follows:

ENGINEER shall serve as CITY OF FAYETTEVILLE's professional engineering consultant in those assignments to which this Agreement applies, and shall give consultation and advice to CITY OF FAYETTEVILLE during the performance of ENGINEER's services. All services shall be performed under the direction of a professional engineer registered in the State of Arkansas and qualified in the particular field.

SECTION 1 - AUTHORIZATION OF SERVICES

1.1 Services on any assignment shall be undertaken only upon written Authorization of CITY OF FAYETTEVILLE and agreement of ENGINEER

1.2 Assignments may include services described hereafter as Basic Services or as Additional Services of ENGINEER.

1.3 Changes, modifications or amendments in scope, price or fees to this contract shall **not** be allowed without a formal contract amendment approved by the Mayor and if needed, the City Council **in advance** of the change in scope, costs, fees, or delivery schedule.

SECTION 2 - BASIC SERVICES OF ENGINEER

2.1 Perform professional services in connection with the Project as hereinafter stated.

2.1.1 The Scope of Services to be furnished by ENGINEER during the Project is included in Appendix A attached hereto and made part of this Agreement.

2.2 ENGINEER shall coordinate their activities and services with the CITY OF FAYETTEVILLE. ENGINEER and CITY OF FAYETTEVILLE agree that ENGINEER has full responsibility for the engineering services.

SECTION 3 - RESPONSIBILITIES OF CITY OF FAYETTEVILLE

3.1 CITY OF FAYETTEVILLE shall, within a reasonable time, so as not to delay the services of ENGINEER:

3.1.1 Provide full information as to CITY OF FAYETTEVILLE's requirements for the Project.

3.1.2 Assist ENGINEER by placing at ENGINEER's disposal all available information pertinent to the assignment including previous reports and any other data relative thereto.

3.1.3 Assist ENGINEER in obtaining access to property reasonably necessary for ENGINEER to perform his services under this Agreement.

3.1.4 Examine all studies, reports, sketches, cost opinions, proposals, and other documents presented by ENGINEER and render in writing decisions pertaining thereto.

3.1.5 Provide such professional legal, accounting, financial, and insurance counseling services as may be required for the Project.

3.1.6 The Park Planning Superintendent is the CITY OF FAYETTEVILLE's project representative with respect to the services to be performed under this Agreement. The Park Planning Superintendent shall have complete authority to transmit instructions, receive information, interpret and define CITY OF FAYETTEVILLE's policies and decisions with respect to materials, equipment, elements and systems to be used in the Project, and other matters pertinent to the services covered by this Agreement.

3.1.7 CITY OF FAYETTEVILLE and/or its representative will review all documents and provide written comments to ENGINEER in a timely manner.

SECTION 4 - PERIOD OF SERVICE

4.1 This Agreement will become effective upon the first written notice by CITY OF FAYETTEVILLE authorizing services hereunder.

4.2 The provisions of this Agreement have been agreed to in anticipation of the orderly progress of the Project through completion of the services stated in the Agreement. ENGINEER will proceed with providing the authorized services immediately upon receipt of written authorization from CITY OF FAYETTEVILLE. Said authorization shall include the scope of the services authorized and the time in which the services are to be completed. The anticipated schedule for this project is included as Appendix A.

SECTION 5 - PAYMENTS TO ENGINEER

5.1 The maximum not-to-exceed amount authorized for this Agreement shall be based upon on an Hourly basis as described in Appendix B.

5.2 Statements

5.2.1 Monthly statements for each calendar month shall be submitted to CITY OF FAYETTEVILLE or such parties as CITY OF FAYETTEVILLE may designate for professional services consistent with ENGINEER'S normal billing schedule. Once established, the billing schedule shall be maintained throughout the duration of the Project.

Applications for payment shall be made in accordance with a format to be developed by ENGINEER and as approved by CITY OF FAYETTEVILLE. Applications for payment

shall be accompanied each month by the updated project schedule as the basis for determining the value earned as the work is accomplished. Final payment for professional services shall be made upon CITY OF FAYETTEVILLE's approval and acceptance with the satisfactory completion of the study and report for the Project.

5.3 Payments

5.3.1 All statements are payable upon receipt and due within thirty (30) days. If a portion of ENGINEER's statement is disputed by CITY OF FAYETTEVILLE, the undisputed portion shall be paid by CITY OF FAYETTEVILLE by the due date. CITY OF FAYETTEVILLE shall advise ENGINEER in writing of the basis for any disputed portion of any statement. CITY OF FAYETTEVILLE will make reasonable effort to pay invoices within 30 days of date the invoice is approved, however, payment within 30 days is not guaranteed.

5.4 Final Payment

5.4.1 Upon satisfactory completion of the work performed under this Agreement, as a condition before final payment under this Agreement, or as a termination settlement under this Agreement, ENGINEER shall execute and deliver to CITY OF FAYETTEVILLE a release of all claims against CITY OF FAYETTEVILLE arising under or by virtue of this Agreement, except claims which are specifically exempted by ENGINEER to be set forth therein. Unless otherwise provided in this Agreement or by State law or otherwise expressly agreed to by the parties to this Agreement, final payment under this Agreement or settlement upon termination of this Agreement shall not constitute a waiver of CITY OF FAYETTEVILLE's claims against ENGINEER or his sureties under this Agreement or applicable performance and payment bonds, if any.

SECTION 6 - GENERAL CONSIDERATIONS

6.1 Insurance

6.1.1 During the course of performance of these services, ENGINEER will maintain (in United States Dollars) the following insurance coverages:

Type of Coverage	Limits of Liability
Workers' Compensation	Statutory
Employers' Liability	$500,000 Each Accident
Commercial General Liability	
Bodily Injury and Property Damage	$1,000,000 Combined Single Limit
Automobile Liability:	
Bodily Injury and Property Damage	$1,000,000 Combined Single Limit
Professional Liability Insurance	$1,000,000 Each Claim

ENGINEER will provide to CITY OF FAYETTEVILLE certificates as evidence of the specified insurance within ten days of the date of this Agreement and upon each renewal of coverage.

6.1.2 CITY OF FAYETTEVILLE and ENGINEER waive all rights against each other and their officers, directors, agents, or employees for damage covered by property insurance during and after the completion of ENGINEER's services.

6.2 Professional Responsibility

6.2.1 ENGINEER will exercise reasonable skill, care, and diligence in the performance of ENGINEER's services and will carry out its responsibilities in accordance with customarily accepted professional engineering practices. CITY OF FAYETTEVILLE will promptly report to ENGINEER any defects or suspected defects in ENGINEER's services of which CITY OF FAYETTEVILLE becomes aware, so that ENGINEER can take measures to minimize the consequences of such a defect. CITY OF FAYETTEVILLE retains all remedies to recover for its damages caused by any negligence of ENGINEER.

6.3 Cost Opinions and Projections

6.3.1 Cost opinions and projections prepared by ENGINEER relating to construction costs and schedules, operation and maintenance costs, equipment characteristics and performance, and operating results are based on ENGINEER's experience, qualifications, and judgment as a design professional. Since ENGINEER has no control over weather, cost and availability of labor, material and equipment, labor productivity, construction Contractors' procedures and methods, unavoidable delays, construction Contractors' methods of determining prices, economic conditions, competitive bidding or market conditions, and other factors affecting such cost opinions or projections, ENGINEER does not guarantee that actual rates, costs, performance, schedules, and related items will not vary from cost opinions and projections prepared by ENGINEER.

6.4 Changes

6.4.1 CITY OF FAYETTEVILLE shall have the right to make changes within the general scope of ENGINEER's services, with an appropriate change in compensation and schedule only after the Mayor or Fayetteville City Council, if needed, approves proposed changes and, upon execution of a mutually acceptable amendment or change order signed by the Mayor of the CITY OF FAYETTEVILLE and the duly authorized officer of ENGINEER.

6.5 Termination

6.5.1 This Agreement may be terminated in whole or in part in writing by either party in the event of substantial failure by the other party to fulfill its obligations under this Agreement through no fault of the terminating party, provided that no termination may be effected unless the other party is given:

6.5.1.1 Not less than ten (10) calendar days written notice (delivered by certified mail, return receipt requested) of intent to terminate,

6.5.1.2 An opportunity for consultation with the terminating party prior to termination.

6.5.2 This Agreement may be terminated in whole or in part in writing by CITY OF FAYETTEVILLE for its convenience, provided that ENGINEER is given:

6.5.2.1 Not less than ten (10) calendar days written notice (delivered by certified mail, return receipt requested) of intent to terminate,

6.5.2.2 An opportunity for consultation with the terminating party prior to termination.

6.5.3 If termination for default is effected by CITY OF FAYETTEVILLE, an equitable adjustment in the price provided for in this Agreement shall be made, but

6.5.3.1 No amount shall be allowed for anticipated profit on unperformed services or other work,

6.5.3.2 Any payment due to ENGINEER at the time of termination may be adjusted to cover any additional costs to CITY OF FAYETTEVILLE because of ENGINEER's default.

6.5.4 If termination for default is effected by ENGINEER, or if termination for convenience is effected by CITY OF FAYETTEVILLE, the equitable adjustment shall include a reasonable profit for services or other work performed. The equitable adjustment for any termination shall provide for payment to ENGINEER for services rendered and expenses incurred prior to the termination, in addition to termination settlement costs reasonably incurred by ENGINEER relating to commitments which had become firm prior to the termination.

6.5.5 Upon receipt of a termination action under Paragraphs 6.5.1 or 6.5.2 above, ENGINEER shall:

6.5.5.1 Promptly discontinue all affected work (unless the notice directs otherwise),

6.5.5.2 Deliver or otherwise make available to CITY OF FAYETTEVILLE all data, drawings, specifications, reports, estimates, summaries and such other information and materials as may have been accumulated by ENGINEER in performing this Agreement, whether completed or in process.

6.5.6 Upon termination under Paragraphs 6.5.1 or 6.5.2 above CITY OF FAYETTEVILLE may take over the work and may award another party an agreement to complete the work under this Agreement.

6.6 Delays

6.6.1 In the event the services of ENGINEER are suspended or delayed by CITY OF FAYETTEVILLE or by other events beyond ENGINEER's reasonable control, ENGINEER shall be entitled to additional compensation and time for reasonable costs incurred by ENGINEER in temporarily closing down or delaying the Project.

6.7 Rights and Benefits

6.7.1 ENGINEER's services will be performed solely for the benefit of CITY OF FAYETTEVILLE and not for the benefit of any other persons or entities.

6.8 Dispute Resolution

6.8.1 Scope of Paragraph: The procedures of this Paragraph shall apply to any and all disputes between CITY OF FAYETTEVILLE and ENGINEER which arise from, or in any way are related to, this Agreement, including, but not limited to the interpretation of this Agreement, the enforcement of its terms, any acts, errors, or omissions of CITY OF FAYETTEVILLE or ENGINEER in the performance of this Agreement, and disputes concerning payment.

6.8.2 Exhaustion of Remedies Required: No action may be filed unless the parties first negotiate. If timely Notice is given under Paragraph 6.8.3, but an action is initiated prior to exhaustion of these procedures, such action shall be stayed, upon application by either party to a court of proper jurisdiction, until the procedures in Paragraphs 6.8.3 and 6.8.4 have been complied with.

6.8.3 Notice of Dispute

6.8.3.1 For disputes arising prior to the making of final payment promptly after the occurrence of any incident, action, or failure to act upon which a claim is based, the party seeking relief shall serve the other party with a written Notice;

6.8.3.2 For disputes arising within one year after the making of final payment, CITY OF FAYETTEVILLE shall give ENGINEER written Notice at the address listed in Paragraph 6.14 within thirty (30) days after occurrence of any incident, accident, or first observance of defect or damage. In both instances, the Notice shall specify the nature and amount of relief sought, the reason relief should be granted, and the appropriate portions of this Agreement that authorize the relief requested.

6.8.4 Negotiation: Within seven days of receipt of the Notice, the Project Managers for CITY OF FAYETTEVILLE and ENGINEER shall confer in an effort to resolve the dispute. If the dispute cannot be resolved at that level, then, upon written request of either side, the matter shall be referred to the President of ENGINEER and the Mayor of CITY OF FAYETTEVILLE or his designee. These officers shall meet at the Project Site or such other location as is agreed upon within 30 days of the written request to resolve the dispute.

6.9 CITY OF FAYETTEVILLE represents that it has sufficient funds or the means of obtaining funds to remit payment to ENGINEER for services rendered by ENGINEER.

6.10 Publications

6.10.1 Recognizing the importance of professional development on the part of ENGINEER's employees and the importance of ENGINEER's public relations, ENGINEER may prepare publications, such as technical papers, articles for periodicals, and press releases, pertaining to ENGINEER's services for the Project. Such publications will be provided to CITY OF FAYETTEVILLE in draft form for CITY OF FAYETTEVILLE's advance review. CITY OF FAYETTEVILLE shall review such drafts promptly and provide CITY OF FAYETTEVILLE's comments to ENGINEER. CITY OF FAYETTEVILLE

may require deletion of proprietary data or confidential information from such publications, but otherwise CITY OF FAYETTEVILLE will not unreasonably withhold approval. The cost of ENGINEER's activities pertaining to any such publication shall be for ENGINEER's account.

6.11 Indemnification

6.11.1 CITY OF FAYETTEVILLE agrees that it will require all construction Contractors to indemnify, defend, and hold harmless CITY OF FAYETTEVILLE and ENGINEER from and against any and all loss where loss is caused or incurred or alleged to be caused or incurred in whole or in part as a result of the negligence or other actionable fault of the Contractors, or their employees, agents, Subcontractors, and Suppliers.

6.12 Ownership of Documents

6.12.1 All documents provided by CITY OF FAYETTEVILLE including original drawings, disks of CADD drawings and cross sections, estimates, specification field notes, and data are and remain the property of CITY OF FAYETTEVILLE. ENGINEER may retain reproduced copies of drawings and copies of other documents.

6.12.2 Engineering documents, drawings, and specifications prepared by ENGINEER as part of the Services shall become the property of CITY OF FAYETTEVILLE when ENGINEER has been compensated for all Services rendered, provided, however, that ENGINEER shall have the unrestricted right to their use. ENGINEER shall, however, retain its rights in its standard drawings details, specifications, databases, computer software, and other proprietary property. Rights to intellectual property developed, utilized, or modified in the performance of the Services shall remain the property of ENGINEER.

6.12.3 Any files delivered in electronic medium may not work on systems and software different than those with which they were originally produced. ENGINEER makes no warranty as to the compatibility of these files with any other system or software. Because of the potential degradation of electronic medium over time, in the event of a conflict between the sealed original drawings/hard copies and the electronic files, the sealed drawings/hard copies will govern.

6.13 Notices

6.13.1 Any Notice required under this Agreement will be in writing, addressed to the appropriate party at the following addresses:

CITY OF FAYETTEVILLE's address:
125 West Mountain Street
Fayetteville, Arkansas 72701

ENGINEER's address:
2049 E. Joyce Blvd, Suite 400
Fayetteville, Arkansas 72703

6.14 Successor and Assigns

6.14.1 CITY OF FAYETTEVILLE and ENGINEER each binds himself and his successors, executors, administrators, and assigns to the other party of this Agreement and to the successors, executors, administrators, and assigns of such other party, in respect to all covenants of this Agreement; except as above, neither CITY OF FAYETTEVILLE nor ENGINEER shall assign, sublet, or transfer his interest in the Agreement without the written consent of the other.

6.15 Controlling Law

6.15.1 This Agreement shall be subject to, interpreted and enforced according to the laws of the State of Arkansas without regard to any conflicts of law provisions.

6.16 Entire Agreement

6.16.1 This Agreement represents the entire Agreement between ENGINEER and CITY OF FAYETTEVILLE relative to the Scope of Services herein. Since terms contained in purchase orders do not generally apply to professional services, in the event CITY OF FAYETTEVILLE issues to ENGINEER a purchase order, no preprinted terms thereon shall become a part of this Agreement. Said purchase order document, whether or not signed by ENGINEER, shall be considered as a document for CITY OF FAYETTEVILLE's internal management of its operations.

SECTION 7 - SPECIAL CONDITIONS

7.1 Additional Responsibilities of ENGINEER

7.1.1 CITY OF FAYETTEVILLE's review, approval, or acceptance of design drawings, specifications, reports and other services furnished hereunder shall not in any way relieve ENGINEER of responsibility for the technical adequacy of the work. Neither CITY OF FAYETTEVILLE's review, approval or acceptance of, nor payment for any of the services shall be construed as a waiver of any rights under this Agreement or of any cause of action arising out of the performance of this Agreement.

7.1.2 ENGINEER shall be and shall remain liable, in accordance with applicable law, for all damages to CITY OF FAYETTEVILLE caused by ENGINEER's negligent performance of any of the services furnished under this Agreement except for errors, omissions or other deficiencies to the extent attributable to CITY OF FAYETTEVILLE or CITY OF FAYETTEVILLE-furnished data.

7.1.3 ENGINEER's obligations under this clause are in addition to ENGINEER's other express or implied assurances under this Agreement or State law and in no way diminish any other rights that CITY OF FAYETTEVILLE may have against ENGINEER for faulty materials, equipment, or work.

7.2 Remedies

7.2.1 Except as may be otherwise provided in this Agreement, all claims, counter-claims, disputes and other matters in question between CITY OF FAYETTEVILLE and ENGINEER arising out of or relating to this Agreement or the breach thereof will be

decided in a court of competent jurisdiction within Arkansas.

7.3 Audit: Access to Records

7.3.1 ENGINEER shall maintain books, records, documents and other evidence directly pertinent to performance on work under this Agreement in accordance with generally accepted accounting principles and practices consistently applied in effect on the date of execution of this Agreement. ENGINEER shall also maintain the financial information and data used by ENGINEER in the preparation of support of the cost submission required for any negotiated agreement or change order and send to CITY OF FAYETTEVILLE a copy of the cost summary submitted. CITY OF FAYETTEVILLE, the State or any of their authorized representatives shall have access to all such books, records, documents and other evidence for the purpose of inspection, audit and copying during normal business hours. ENGINEER will provide proper facilities for such access and inspection. Notwithstanding anything to the contrary herein, ENGINEER's proprietary, financial information is not subject to audit.

7.3.2 Records under Paragraph 7.3.1 above shall be maintained and made available during performance on assisted work under this Agreement and until three years from the date of final payment for the project. In addition, those records which relate to any controversy arising out of such performance, or to costs or items to which an audit exception has been taken, shall be maintained and made available until three years after the date of resolution of such appeal, litigation, claim or exception.

7.3.3 This right of access clause (with respect to financial records) applies to:

7.3.3.1 Negotiated prime agreements:

7.3.3.2 Negotiated change orders or agreement amendments in excess of $10,000 affecting the price of any formally advertised, competitively awarded, fixed price agreement:

7.3.3.3 Agreements or purchase orders under any agreement other than a formally advertised, competitively awarded, fixed price agreement. However, this right of access does not apply to a prime agreement, lower tier subagreement or purchase order awarded after effective price competition, except:

7.3.3.3.1 With respect to record pertaining directly to subagreement performance, excluding any financial records of ENGINEER;

7.3.3.3.2 If there is any indication that fraud, gross abuse or corrupt practices may be involved;

7.3.3.3.3 If the subagreement is terminated for default or for convenience.

7.4 Covenant Against Contingent Fees

7.4.1 ENGINEER warrants that no person or selling agency has been employed or retained to solicit or secure this Agreement upon an agreement of understanding for a commission, percentage, brokerage or continent fee, excepting bona fide employees or bona fide established commercial or selling agencies maintained by ENGINEER for the purpose of securing business. For breach or violation of this warranty, CITY OF FAYETTEVILLE shall have the right to annul this Agreement without liability or at its discretion, to deduct from the contract price or consideration, or otherwise recover, the full amount of such commission, percentage, brokerage, or contingent fee.

7.5 Gratuities

7.5.1 If CITY OF FAYETTEVILLE finds after a notice and hearing that ENGINEER or any of ENGINEER's agents or representatives, offered or gave gratuities (in the form of entertainment, gifts or otherwise) to any official, employee or agent of CITY OF FAYETTEVILLE, in an attempt to secure an agreement or favorable treatment in awarding, amending or making any determinations related to the performance of this Agreement, CITY OF FAYETTEVILLE may, by written notice to ENGINEER terminate this Agreement. CITY OF FAYETTEVILLE may also pursue other rights and remedies that the law or this Agreement provides. However, the existence of the facts on which CITY OF FAYETTEVILLE bases such finding shall be in issue and may be reviewed in proceedings under the Remedies clause of this Agreement.

7.5.2 In the event this Agreement is terminated as provided in Paragraph 7.5.1, CITY OF FAYETTEVILLE may pursue the same remedies against ENGINEER as it could pursue in the event of a breach of the Agreement by ENGINEER As a penalty, in addition to any other damages to which it may be entitled by law, CITY OF FAYETTEVILLE may pursue damages in an amount up to the limits set forth in Section 7.8 below.

7.6 Arkansas Freedom of Information Act

7.6.1 City contracts and documents, including internal documents and documents of subcontractors and sub-consultants, prepared while performing City contractual work are subject to the Arkansas Freedom of Information Act (FOIA). If a Freedom of Information Act request is presented to the CITY OF FAYETTEVILLE, ENGINEER will do everything possible to provide the documents in a prompt and timely manner as prescribed in the Arkansas Freedom of Information Act (A.C.A. §25-19-101 et seq.). Only legally authorized photocopying costs pursuant to the FOIA may be assessed for this compliance.

7.7 Mutual Waiver

Notwithstanding anything in this Agreement to the contrary, neither party (including its subconsultants, agents, assignees, affiliates and vendors) shall be liable for any special, consequential, indirect, punitive, exemplary or incidental damages of any kind regardless of the cause of action (including negligence of any kind or character including gross negligence).

IN WITNESS WHEREOF, CITY OF FAYETTEVILLE, ARKANSAS by and through its Mayor, and ENGINEER, by its authorized officer have made and executed this Agreement as of the day and year first above written.

CITY OF FAYETTEVILLE, ARKANSAS	ENGINEER
By:_____	By: Zach Moore
Mayor, Molly Rawn	Transportation Team Leader, Zach Moore
ATTEST:	
By: _____	By: Luke Freedle Digitally Signed 04/07/2026
City Clerk	Municipal Team Leader, Luke Freedle

END OF AGREEMENT FOR PROFESSIONAL ENGINEERING SERVICES

APPENDIX A – SCOPE OF SERVICES

1. General

Generally, the scope of services includes environmental permitting, design, bidding, and construction phase services for design of Phase 3 of the Kessler Mountain Regional Park. Improvements will consist primarily of the design of two new soccer fields along with bleachers with overhead canopy, entrance traffic circle revisions, addition of on-street and site parking, drainage improvements, landscaping, artificial turf, and sports lighting,.

2. Surveys

2.1. Design Surveys

Garver will utilize a topographic survey to be provided by the Owner..

2.2. Property Surveys

Garver will utilize the existing site boundary survey previously prepared by the Owner.

3. Geotechnical Services

The Scope of Services excludes Geotechnical services.

4. Coordination

Garver will furnish plans to all known utility owners potentially affected by the project through the Large Scale Development process. Garver shall provide coordination among all known affected utility owners to enable them to coordinate efforts for any necessary utility service & potential relocations. Garver will include the surveyed locations of the observable and marked utilities in the construction plans.

Garver will distribute notification letters through mailings to adjacent property owners as required by the Large Scale Development process.

Garver will also attend coordination meetings with the Owner and other agencies as required including a Pre-LSD Concept meeting with the City's Planning Department. Garver will prepare exhibits for these meetings when appropriate.

5. Environmental Services

Wetland Delineation Surveys

Garver will conduct a wetland delineation to determine the limits of potentially jurisdictional Waters of the United States, including streams, within the project limits. Each potentially jurisdictional feature will be mapped with a sub-meter GPS. ArcGIS Pro software will be utilized to create shapefiles for use in determining avoidance and minimization of impacts and permitting. The delineation will utilize methodologies outlined in the appropriate Regional Supplement to the U.S. Army Corps of Engineers (USACE) Wetlands Delineation Manual. Garver will accomplish the following as part of the wetland delineation:

- Review pertinent resources related to the project site's hydrology and soils, and review of historical topographic maps, aerial photographs, previously completed delineations, and original design plans.
- Field survey of wetlands and streams within the project boundary.

- Create shapefiles from field-collected data to be utilized in wetland report exhibits and for quantification of wetland acreages and stream lengths within the project.
- Completion of field data forms for wetlands and streams.

Complete a wetland delineation report of findings that includes necessary documentation for submittal to the USACE requesting concurrence with the delineation and appropriate Section 404 permit application. A Section 404 Nationwide permit is anticipated for this project and will be coordinated with the USACE. Garver will estimate wetland impacts and complete a functional value assessment to determine mitigation credit needs. We will assist with locating an appropriate USACE-approved mitigation bank and mitigation credit purchase. Garver will provide initial coordination with the following environmental agencies in support of the Section 404 NWP:

- US Fish and Wildlife Service (USFWS)
- Arkansas Historic Preservation Office (SHPO)
- US Army Corps of Engineers (USACE)

Garver will complete a large site stormwater pollution prevention plan (SWPPP) and Notice of Intent (NOI) for DEQ approval. We will complete the written SWPPP and review the design for implementation of best management practices (BMPs). Garver will pay the initial SWPPP permitting fee and seek reimbursement. Additional, recurring annual fees for maintenance of the SWPPP will be paid by the City. Garver will coordinate the issuance of one Short Term Activity Authorization (STAA). The STAA fee will be paid by Garver for reimbursement. Section 401 and 404 Individual permitting and any mitigation planning beyond what is listed in this scope is considered extra work and can be completed upon receipt of a written amendment.

6. Traffic Study

The Scope of Services excludes the preparation of a traffic study.

7. On-site Sewer Plant Close Out

Garver will provide services for the removal of the existing on-site sewer plant. Included in this work is providing exhibits of infrastructure to demolish, specifying proper handling of residual sludges and biosolids within the existing system, details on plugging or removing pipes and leach fields, listing equipment to be salvaged and provided back to the city for handling, and submitting a Notice of Termination for the on-site treatment system with the Arkansas Department of Environmental Quality (ADEQ). Garver will conduct two site visits including a termination inspection with ADEQ to close out the wastewater permit. Connection to the existing Fayetteville sewer system has to be made prior to closeout of the wastewater permit. Deliverables will include:

- Equipment salvage exhibit
- ADEQ Notice of Termination forms for signature
- ADEQ Notice of Termination approval letter

Excluded from the scope is design of any connection of the existing sewer lines at Kessler Park to the City of Fayetteville's wastewater collection system or design of any new restroom facilities or sewer lines on the property.

8. Large Scale Development/Conceptual Design

This conceptual submittal will be for the purpose of coordinating the proposed improvements with the Owner and the utility companies through the Large Scale Development process and developing an order of magnitude cost estimate for the project. More specifically, the scope includes:

- Cover and Index Sheet
- General Notes, Legend and Survey Control
- Vicinity Map
- Adjacent Parcel Index
- Parcel Map
- Tract Survey Sheet
    - Utilizing Tract Survey information as prepared by the City on April 22, 2014.
- Site Layout Plan Sheets
    - Soccer Field/Park Area
    - Entrance Road Revisions at Traffic Circle
    - Entrance Road Typical Section
    - On-Street/Expanded Parking
- Grading and Drainage Sheets
    - Soccer Field/Park Area
    - Entrance Road Revisions at Traffic Circle
    - On-Street/Expanded Parking
    - Detention Pond Revisions
- Site Details
- Concept Planting Plan
- Update Existing Tree Preservation Plan
    - Utilizing the previously prepared Tree Preservation Plan from Phase 1
- Conceptual Electrical Layout
- Quantities
- Opinion of Probable Construction Costs
- Preliminary Drainage Report
- Attend Subdivision Committee meetings
- Comment response form from Subdivision Committee review
- Attend Planning Commission Meetings
- Comment response form from Planning Commission review

Garver will incorporate comments from the Owner in the Preliminary Design. Garver will proceed with Preliminary Design after the Conceptual Design and Large Scale Development is approved by the Owner in writing.

9. Preliminary Design

Once Garver receives written approval from Owner on Conceptual Design, Garver will begin Preliminary Design. The Preliminary Design phase submittal will include:

- All plan sheets from the Conceptual Design progressed to 60% design.
- Erosion Control Plans
- Cut Sheets for Major Products (Bleachers, shade structures, synthetic turf, etc.)
- Opinion of Probable Construction Cost

The preliminary design phase will represent approximately 60 percent of final construction contract plans. This submittal will not include technical specifications or “front end” contract documents. Garver will incorporate comments from the Owner on the Preliminary Design in the Final Design. Garver will proceed with Final Design after the Preliminary Design is approved by the Owner in writing.

10. Final Design

Once Garver receives written approval from Owner on Preliminary Design, Garver will begin Final Design. During the final design phase of the project, Garver will conduct final designs to prepare construction plans and specifications, for one construction contract, including Construction Documents for the Building Plans, final site development plans, construction details and quantities, special provisions, and opinion of probable construction cost. Garver will also make any needed plan changes as a result of the final plan reviews and prepare the construction documents as required to advertise for bids.

The Final Design phase submittal will include:

- All plan sheets from the Preliminary Design progressed to 90% design.
- Maintenance of Traffic Plans for traffic circle revisions
- Demolition Plans
- Final Drainage Report
- Project Manual and Technical Specifications
- Opinion of Probable Construction Cost structured to match bid form with up to three (3) deductive alternates.

11. Property Acquisition Documents

The preparation of Property Acquisition Documents are not anticipated for this project.

12. Bidding Services

During the bidding phase of the project, Garver will:

A. Support the contract documents by preparing addenda and responding to RFIs as appropriate.
B. Participate in a pre-bid meeting.
C. Attend the bid opening.
D. Evaluate bids and recommend award.

13. Construction Phase Services

During the construction phase of work, Garver will accomplish the following:

A. Issue a Notice to Proceed letter to the Contractor and attend preconstruction meeting.
B. Evaluate and respond to construction material submittals and shop drawings. Corrections or comments made by Garver on the shop drawings during this review will not relieve Contractor from compliance with requirements of the drawings and specifications. The check will only be for review of general conformance with the design concept of the project and general compliance with the information given in the contract documents. The Contractor will be responsible for confirming and correlating all quantities and dimensions, selecting fabrication processes and techniques of construction, coordinating his work with that of all other trades, and performing his work in a safe and satisfactory manner. Garver’s review shall not constitute approval of safety precautions or constitute approval of construction means, methods, techniques, sequences, procedures, or assembly of various components. When certification of performance characteristics of materials, systems or equipment is required by the Contract Documents, either directly or implied for a complete and workable system, Garver shall be entitled to rely upon such

submittal or implied certification to establish that the materials, systems or equipment will meet the performance criteria required by the Contract Documents.

C. Issue instructions to the Contractor on behalf of the Owner and issue necessary clarifications (respond to RFIs) regarding the construction contract documents.
D. Review the Contractor's progress payment requests based on the quantities provided by the Contractor of contract items completed and accepted by the Owner and make a recommendation to the Owner regarding payment. Garver's recommendation for payment will not be a representation that Garver has made inspections to (1) check the quality or exact quantities of the Work; (2) to review billings from Subcontractors and material suppliers to substantiate the Contractor's right to payment; or (3) to ascertain how the Contractor has used money previously paid to the Contractor.
E. Provide limited onsite observation services for the 300-calendar-day construction contract performance time. The proposed fee is based on an average of 2 hours per week during the 300-calendar-day construction contract performance time. If the construction time extends beyond the time established in this agreement or if the Owner wishes to increase the time or frequency of the observation, the Owner will pay Garver an additional fee agreed to by the Owner and Garver.
F. When authorized by the Owner, prepare change orders for changes in the work from that originally provided for in the construction contract documents. If redesign or substantial engineering or surveying is required in the preparation of these change order documents, the Owner will pay Garver an additional fee to be agreed upon by the Owner and Garver.
G. Participate in final project inspection, prepare punch list, review final project closing documents, and submit final pay request.

Onsite construction observation will be provided by Garver's Project Manager or representative who will provide or accomplish the following:

A. Consult with and advise the Owner during the construction period.
B. Coordinate with the firm providing construction materials quality assurance testing under separate contract with the Owner.
C. Maintain a project diary which will contain information pertinent to each site visit.

The proposed fee for Construction Phase Services is based on a 300-calendar-day construction contract performance time. If the construction time extends beyond the time established in this agreement, and the Owner wants Garver to continue the applicable Construction Phase Services, the Owner will pay Garver an additional fee agreed to by the Owner and Garver.

In performing onsite observation, Garver will endeavor to protect the Owner against defects and deficiencies in the work of the Contractor(s); but Garver cannot guarantee the performance of the Contractor(s), nor be responsible for the actual supervision of construction operations or for the safety measures that the Contractor(s) takes or should take. However, if at any time during construction Garver observes that the Contractor's work does not comply with the construction contract documents, Garver will notify the Contractor of such non-compliance and instruct him to correct the deficiency and/or stop work, as appropriate for the situation. Garver will also record the observance, the discussion, and the actions taken. If the Contractor continues without satisfactory corrective action, Garver will notify the Owner immediately, so that appropriate action under the Owner's contract with the Contractor can be taken.

14. Project Deliverables

The following will be submitted to the Owner, or others as indicated, by Garver:

D. Digital copies of the Conceptual Design/Large Scale Development Plans with opinion of probable construction cost.
E. Digital copies of the Preliminary Design with opinion of probable construction cost.
F. One digital copy of the Preliminary Plans to each potentially affected utility company.

G. Digital copies of the Final Design with opinion of probable construction cost.
H. Digital copies of the revised Final Design with opinion of probable construction cost.
I. One digital copy of the revised Final Plans to each potentially affected utility company.
J. Three copies of the Final Plans (1 Full Size, 2 half size) and Specifications to the Contractor.
K. Electronic files as requested including CAD drawings in AutoCad file format.

15. Extra Work

The following items are not included under this agreement but will be considered as extra work:

L. Redesign for the Owner's convenience or due to changed conditions after previous alternate direction and/or approval.
M. Submittals or deliverables in addition to those listed herein.
N. Pavement Design. The intent is to utilize pavement design from previous phases.
O. Design of any utility extensions or relocations other than private electrical.
P. Topographic and Boundary Survey.
Q. Significant structural design.
R. Environmental Handling and Documentation, including other work related to environmentally or historically (culturally) significant items.
S. Coordination with FEMA and preparation/submittal of a CLOMR and/or LOMR.
T. Section 401 and 404 Individual permitting and mitigation planning beyond what is listed herein.
U. Section 106 consultation and Phase I, II, and III cultural resources surveys.
V. Section 7 consultation beyond what is listed herein, including any presence/absence surveys.
W. Water and Sewer design and associated ADH permitting outside on-site sewer plant closeout as provided herein.
X. Record Drawings

Extra Work will be as directed by the Owner in writing for an additional fee as agreed upon by the Owner and Garver.

16. Schedule

Garver shall begin work under this Agreement within ten (10) days of a Notice to Proceed and shall complete the work in accordance with the schedule below:

Phase Description	Calendar Days
Conceptual Design	45 days from Notice to Proceed
Parks Dept. Review of Conceptual	**Estimated 14 Days**
City LSD Process	45 days from Owner Approval of Conceptual Design
Preliminary Design	60 days from approval of Large Scale Development Plans
Parks Dept. Review of Preliminary	**Estimated 14 Days**
Final Design	60 days from approval of Preliminary Design
Parks Dept. Review of Final	**Estimated 14 Days**

APPENDIX B

City of Fayetteville
Kessler Mountain Regional Park Phase 3

FEE SUMMARY

Title I Service		**Estimated Fees**
Environmental	$	15,850.00
On-Site Sewer Plant Closeout	$	15,150.00
Large Scale Development/Conceptual Plans	$	89,250.00
Preliminary Design	$	101,150.00
Final Design	$	93,600.00
Bidding Services	$	8,000.00
Subtotal for Title I Service	**$**	**323,000.00**
Title II Services		
Construction Materials Testing	$	-
Construction Phase Services	$	50,000.00
Subtotal for Title II Services	**$**	**50,000.00**
FEE TOTAL		**$373,000.00**

APPENDIX B

City of Fayetteville
Kessler Mountain Regional Park Phase 3

ENVIRONMENTAL

	WORK TASK DESCRIPTION	ES-5	ES-4	ES-3	ES-2	ES-1
		T14 - Trans RC Planning & Envir	T14 - Trans RC Planning & Envir	T14 - Trans RC Planning & Envir	T14 - Trans RC Planning & Envir	T14 - Trans RC Planning & Envir
		$277.00	$219.00	$194.00	$151.00	$119.00
		hr	hr	hr	hr	hr
1.	**Wetland Delineation and Permitting**					
	Wetland Delineation, Report, GIS			12		32
	Section 404 Nationwide Permitting	1		12		8
	Agency Coordination			4		
	SWPPP and STAA (1)	1		10		8
	QC Reviews and Project Management	6		2		
	Permitting	**8**	**0**	**40**	**0**	**48**
	Hours	**8**	**0**	**40**	**0**	**48**
	Salary Costs	$2,216.00	$0.00	$7,760.00	$0.00	$5,712.00

SUBTOTAL - SALARIES:		**$15,688.00**
DIRECT NON-LABOR EXPENSES		
Document Printing/Reproduction/Assembly	$22.00	
GPS Equipment	$40.00	
Travel Costs	$100.00	
SUBTOTAL - DIRECT NON-LABOR EXPENSES:		**$162.00**
SUBTOTAL:		**$15,850.00**
SUBCONSULTANTS FEE:		**$0.00**
TOTAL FEE:		**$15,850.00**

APPENDIX B

City of Fayetteville
Kessler Mountain Regional Park Phase 3

ON-SITE SEWER PLANT CLOSEOUT

	WORK TASK DESCRIPTION	E-5	E-2	E-5	E-2
		W01 - Water Arkansas	W01 - Water Arkansas	T21 - Trans NW AR Muni	T21 - Trans NW AR Muni
		$272.00	$171.00	$272.00	$171.00
		hr	hr	hr	hr
1.	**Project Management**				
	Administration and Coordination	4		1	
	Quality Control Review	4			1
	Coordination Meetings with ADEQ	2	2		
	Subtotal - Project Management	**10**	**2**	**1**	**1**
2.	**Civil Engineering**				
	Salvage Exhibit	6	8		
	Site Visits	8	8		
	Notification Letter to ADEQ	2	8		
	ADEQ NOT Form & Closure Plan	4	12		
	Subtotal - Civil Engineering	**20**	**36**	**0**	**0**
	Hours	**30**	**38**	**1**	**1**
	Salary Costs	$8,160.00	$6,498.00	$272.00	$171.00

SUBTOTAL - SALARIES:			**$15,101.00**
DIRECT NON-LABOR EXPENSES			
Document Printing/Reproduction/Assembly	$20.00		
Travel Costs	$29.00		
SUBTOTAL - DIRECT NON-LABOR EXPENSES:			**$49.00**
SUBTOTAL:			**$15,150.00**
SUBCONSULTANTS FEE:			**$0.00**
TOTAL FEE:			**$15,150.00**

APPENDIX B

City of Fayetteville
Kessler Mountain Regional Park Phase 3

LARGE SCALE DEVELOPMENT/CONCEPTUAL PLANS

	WORK TASK DESCRIPTION	E-5	E-2	E-1	E-4	E-1	T-2	E-4	E-2
		T21 - Trans NW AR Muni	T21 - Trans NW AR Muni	T21 - Trans NW AR Muni	F02 - Federal Landscape	F02 - Federal Landscape	T21 - Trans NW AR Muni	B16 - Buildings MEP Design B16	B16 - Buildings MEP Design B16
		$272.00	$171.00	$146.00	$223.00	$146.00	$127.00	$223.00	$171.00
		hr	hr	hr	hr	hr	hr	hr	hr
1.	**Project Management/LSD Coordination**								
	Administration/Invoicing	4							
	Quality Control Review	16			4			1	
	Coordination Meetings w/Parks	8	8		4				
	Pre- LSD Concept Meeting w/Planning Department	4	4		4				
	Subdivision Committee Submittal/Meeting	4	4						
	Planning Commission Submittal/Meeting	4	4						
	Franchise Utility Coordination		4						
	Notification Letters to Adjacent Property Owners			4			4		
	Subtotal - Project Management/LSD Coordination	**40**	**24**	**4**	**12**	**0**	**4**	**1**	**0**
2.	**Civil Engineering Design**								
	Preliminary Layout Design								
	Soccer Field/Park Area		4	12	4	16			
	Entrance Road Revisions at Traffic Circle		4	8					
	On-Street/Expanded Parking		4	8					
	Preliminary Grading Design								
	Soccer Field/Park Area		8	32					
	Entrance Road Revisions at Traffic Circle		4	16					
	On-Street/Expanded Parking		6	16					
	Preliminary Drainage/Detention Design								
	Update Hydrologic Model		4	12					
	Update Hydraulic Model (Design Pipe/Ditch systems)		8	24					
	Update Hydraulic Model (Design Detention Pond(s))		6	24					
	Subtotal - Civil Engineering Design	**0**	**48**	**152**	**4**	**16**	**0**	**0**	**0**
3.	**Civil Plans and Reports**								
	Cover and Index Sheet		1	2			4		
	General Notes, Legend and Survey Control		1	2			4		
	Vicinity Map		1	2			2		
	Adjacent Parcel Index		1	2			2		
	Parcel Map		1	2			2		
	Tract Survey Sheet		1	2			4		
	Site Layout Plan Sheets								
	Soccer Field/Park Area		2	8			8		
	Entrance Road Revisions at Traffic Circle		2	8			8		
	Entrance Road Typical Section		1	2			4		
	On-Street/Expanded Parking		2	4			8		
	Grading and Drainage Sheets								
	Soccer Field/Park Area		1	8			8		
	Entrance Road Revisions at Traffic Circle		1	6			8		
	On-Street/Expanded Parking		1	6			8		
	Detention Pond Revisions		1	6			4		
	Site Details		1	4			8		
	Quantities		4	8			4		
	Opinion of Probable Construction Cost		2	4					
	Preliminary Drainage Report for LSD submittal		4	12			8		
	Subtotal - Civil Plans and Reports	**0**	**28**	**88**	**0**	**0**	**94**	**0**	**0**
4.	**Landscape Architecture**								
	Prepare Concept Planting Plan				2	16			
	Update Existing Tree Preservation Plan				2	4	2		
	Subtotal - Landscape Architecture	**0**	**0**	**0**	**4**	**20**	**2**	**0**	**0**

APPENDIX B

City of Fayetteville
Kessler Mountain Regional Park Phase 3

LARGE SCALE DEVELOPMENT/CONCEPTUAL PLANS

	WORK TASK DESCRIPTION	E-5	E-2	E-1	E-4	E-1	T-2	E-4	E-2
		T21 - Trans NW AR Muni	T21 - Trans NW AR Muni	T21 - Trans NW AR Muni	F02 - Federal Landscape	F02 - Federal Landscape	T21 - Trans NW AR Muni	B16 - Buildings MEP Design B16	B16 - Buildings MEP Design B16
		$272.00	$171.00	$146.00	$223.00	$146.00	$127.00	$223.00	$171.00
		hr	hr	hr	hr	hr	hr	hr	hr
5.	**Conceptual Electrical**								
	Concept Layouts							2	2
	Code Analysis							1	
	Initial Utility Coordination / Meeting							3	2
	Specifications								2
	Opinion of Probable Construction Cost							2	
	Internal Coordination								
	Subtotal - Conceptual Electrical	**0**	**0**	**0**	**0**	**0**	**0**	**8**	**6**
	Hours	**40**	**100**	**244**	**20**	**36**	**100**	**9**	**6**
	Salary Costs	$10,880.00	$17,100.00	$35,624.00	$4,460.00	$5,256.00	$12,700.00	$2,007.00	$1,026.00

SUBTOTAL - SALARIES:	**$89,053.00**
DIRECT NON-LABOR EXPENSES	
Document Printing/Reproduction/Assembly	$50.00
Postage/Freight/Courier	$78.00
Travel Costs	$69.00
SUBTOTAL - DIRECT NON-LABOR EXPENSES:	**$197.00**
SUBTOTAL:	**$89,250.00**
SUBCONSULTANTS FEE:	**$0.00**
TOTAL FEE:	**$89,250.00**

APPENDIX B

City of Fayetteville
Kessler Mountain Regional Park Phase 3

PRELIMINARY DESIGN

	WORK TASK DESCRIPTION	E-5	E-2	E-4	E-1	E-1	T-2	E-4	E-2
		T21 - Trans NW AR Muni	T21 - Trans NW AR Muni	F02 - Federal Landscape	F02 - Federal Landscape	T21 - Trans NW AR Muni	T21 - Trans NW AR Muni	B16 - Buildings MEP Design B16	B16 - Buildings MEP Design B16
		$272.00	$171.00	$223.00	$146.00	$146.00	$127.00	$223.00	$171.00
		hr	hr	hr	hr	hr	hr	hr	hr
1.	**Project Management**								
	Administration/Invoicing	4							
	Quality Control Review	24						1	
	Coordination Meetings w/Parks	8	8	2	1			8	
	Franchise Utility Coordination		4					2	
	Subtotal - Project Management	**36**	**12**	**2**	**1**	**0**	**0**	**11**	**0**
2.	**60% Civil Engineering Design**								
	60% Layout Design								
	Soccer Field/Park Area		4	2	16	8			
	Entrance Road Revisions at Traffic Circle		4			8			
	On-Street/Expanded Parking		4			8			
	60% Grading Design								
	Soccer Field/Park Area		8			24			
	Entrance Road Revisions at Traffic Circle		8			24			
	On-Street/Expanded Parking		8			24			
	60% Drainage/Detention Design								
	Update Hydrologic Model		2			4			
	Update Hydraulic Model (Design Pipe/Ditch systems)		4			24			
	Update Hydraulic Model (Design Detention Pond(s))		4			24			
	60% Erosion Control/BMP Design								
	Soccer Field/Park Area					4	4		
	Entrance Road Revisions at Traffic Circle					4	4		
	On-Street/Expanded Parking					4	4		
	60% Misc. Detail Development								
	Fencing/Catch Netting			1	4				
	Bleachers/Shade Structure			1	4				
	Benches/Trash Cans/Goals			1	4				
	LID Features		4			4			
	Turf Subgrade/Drainage			2	4	2			
	Special Signage		1	1	1	1			
	Subtotal - 60% Civil Engineering Design	**0**	**51**	**8**	**33**	**167**	**12**	**0**	**0**
3.	**Civil Plans and Reports**								
	Cover and Index Sheet						1		
	General Notes, Legend and Survey Control						1		
	Vicinity Map						0.5		
	Adjacent Parcel Index						0.5		
	Parcel Map						0.5		
	Tract Survey Sheet						0.5		
	Site Layout Plan Sheets								
	Soccer Field/Park Area		2	2	8	8	8		
	Entrance Road Revisions at Traffic Circle		2			8	8		
	Entrance Road Typical Section		2			2	4		
	On-Street/Expanded Parking		2			4	8		
	Grading and Drainage Sheets								
	Soccer Field/Park Area		2			8	12		
	Entrance Road Revisions at Traffic Circle		2			6	12		
	On-Street/Expanded Parking		2			6	12		
	Detention Pond Revisions		2			4	4		
	Miscellaneous Details		2	2	4	4	16		
	Cut Sheets for Major Products (Bleachers, shade structures, synthetic turf, etc.)		2	4	4	2	8		
	Erosion Control Plans								
	Soccer Field/Park Area		1			2	4		
	Entrance Road Revisions at Traffic Circle		1			2	2		
	On-Street/Expanded Parking		1			2	4		
	Quantities		4			8	4		
	Opinion of Probable Construction Cost		2			4			
	Subtotal - Civil Plans and Reports	**0**	**29**	**8**	**16**	**70**	**110**	**0**	**0**
4.	**Landscape Architecture**								
	Develop Turf Plan for North Field			2	8				
	Develop Landscape Plans				4				
	Prepare Preliminary Specifications			2	2				
	Opinion of Probable Construction Cost			1	1				
	Subtotal - Landscape Architecture	**0**	**0**	**5**	**15**	**0**	**0**	**0**	**0**

APPENDIX B

City of Fayetteville
Kessler Mountain Regional Park Phase 3

PRELIMINARY DESIGN

	WORK TASK DESCRIPTION	E-5	E-2	E-4	E-1	E-1	T-2	E-4	E-2
		T21 - Trans NW AR Muni	T21 - Trans NW AR Muni	F02 - Federal Landscape	F02 - Federal Landscape	T21 - Trans NW AR Muni	T21 - Trans NW AR Muni	B16 - Buildings MEP Design B16	B16 - Buildings MEP Design B16
		$272.00	$171.00	$223.00	$146.00	$146.00	$127.00	$223.00	$171.00
		hr	hr	hr	hr	hr	hr	hr	hr
5.	**60% Electrical**								
	Preliminary Plans						2	4	30
	Preliminary Details						2		3
	Specifications							4	
	Opinion of Probable Construction Cost							2	
	Subtotal - 60% Electrical	**0**	**0**	**0**	**0**	**0**	**4**	**10**	**33**
	Hours	**36**	**92**	**23**	**65**	**237**	**126**	**21**	**33**
	Salary Costs	$9,792.00	$15,732.00	$5,129.00	$9,490.00	$34,602.00	$16,002.00	$4,683.00	$5,643.00

SUBTOTAL - SALARIES:	**$101,073.00**
DIRECT NON-LABOR EXPENSES	
Document Printing/Reproduction/Assembly	$55.00
Travel Costs	$22.00
SUBTOTAL - DIRECT NON-LABOR EXPENSES:	**$77.00**
SUBTOTAL:	**$101,150.00**
SUBCONSULTANTS FEE:	**$0.00**
TOTAL FEE:	**$101,150.00**

APPENDIX B

City of Fayetteville
Kessler Mountain Regional Park Phase 3

FINAL DESIGN

WORK TASK DESCRIPTION	E-5	E-2	E-1	T-2	E-4	E-2	E-4	E-1
	T21 - Trans NW AR Muni	T21 - Trans NW AR Muni	T21 - Trans NW AR Muni	T21 - Trans NW AR Muni	B16 - Buildings MEP Design B16	B16 - Buildings MEP Design B16	F02 - Federal Landscape	F02 - Federal Landscape
	$272.00	$171.00	$146.00	$127.00	$223.00	$171.00	$223.00	$146.00
	hr	hr	hr	hr	hr	hr	hr	hr
1. Project Management								
Administration/Invoicing	4							
Quality Control Review	24				2			
Coordination Meetings w/Parks	4	4			1		4	
Franchise Utility Coordination		4			2			
Stamp Plans/Issue IFC Plans and Specs		2					2	
Subtotal - Project Management	**32**	**10**	**0**	**0**	**5**	**0**	**6**	**0**
2. 90% Civil Engineering Design								
90% Layout Design								
Soccer Field/Park Area		2	8				2	2
Entrance Road Revisions at Traffic Circle		2	8					
On-Street/Expanded Parking		2	8					
90% Grading Design								
Soccer Field/Park Area		8	24					
Entrance Road Revisions at Traffic Circle		6	16					
On-Street/Expanded Parking		6	16					
90% Drainage/Detention Design								
Update Hydrologic Model		2	4					
Update Hydraulic Model (Design Pipe/Ditch systems)		6	16					
Update Hydraulic Model (Design Detention Pond(s))		6	16					
90% Erosion Control/BMP Design								
Soccer Field/Park Area		2	4					
Entrance Road Revisions at Traffic Circle		2	4					
On-Street/Expanded Parking		2	4					
90% Misc. Detail Development								
Fencing/Catch Netting							1	2
Bleachers/Shade Structure							1	2
Benches/Trash Cans/Goals							1	2
LID Features		4	6					
Turf Subgrade/Drainage			2				2	4
Special Signage			1				1	1
Maintenance of Traffic Design for Entrance Road		2	4					
Subtotal - 90% Civil Engineering Design	**0**	**52**	**141**	**0**	**0**	**0**	**8**	**13**
3. Civil Plans and Reports								
Cover and Index Sheet				1				
General Notes, Legend and Survey Control				1				
Vicinity Map				0.5				
Adjacent Parcel Index				0.5				
Parcel Map				0.5				
Tract Survey Sheet				0.5				
Site Layout Plan Sheets								
Soccer Field/Park Area		2	4	4			2	6
Entrance Road Revisions at Traffic Circle		2	4	4				
Entrance Road Typical Section		1	1	2				
On-Street/Expanded Parking		2	4	4				
Grading and Drainage Sheets								
Soccer Field/Park Area		2	6	8				
Entrance Road Revisions at Traffic Circle		2	4	6				
On-Street/Expanded Parking		2	4	4				
Detention Pond Revisions		2	4	4				
Miscellaneous Details		2	4	8			2	4
Erosion Control Plans								
Soccer Field/Park Area		1	2	2				
Entrance Road Revisions at Traffic Circle		1	2	2				
On-Street/Expanded Parking		1	2	2				
Maintenance of Traffic Plans		2	4	4				
Demolition Plans		2	4	4				
Quantities		4	8	4				
Opinion of Probable Construction Cost		2	4					
Final Drainage Report		8	16	8				
Project Specifications/Manual		4	16					
Address Owner Comments on 90% Submittal		2	8	8			2	8
Subtotal - Civil Plans and Reports	**0**	**44**	**101**	**82**	**0**	**0**	**6**	**18**

APPENDIX B

City of Fayetteville
Kessler Mountain Regional Park Phase 3

FINAL DESIGN

	WORK TASK DESCRIPTION	E-5	E-2	E-1	T-2	E-4	E-2	E-4	E-1
		T21 - Trans NW AR Muni	T21 - Trans NW AR Muni	T21 - Trans NW AR Muni	T21 - Trans NW AR Muni	B16 - Buildings MEP Design B16	B16 - Buildings MEP Design B16	F02 - Federal Landscape	F02 - Federal Landscape
		$272.00	$171.00	$146.00	$127.00	$223.00	$171.00	$223.00	$146.00
		hr	hr	hr	hr	hr	hr	hr	hr
4.	**Landscape Architecture**								
	Finalize landscape plans								4
	Finalize landscape details								1
	Finalize specifications							2	2
	Opinion of Probable Const. Cost/ Final Quantities							1	1
	Subtotal - Landscape Architecture	**0**	**0**	**0**	**0**	**0**	**0**	**3**	**8**
5.	**90% Electrical**								
	Final Electrical Plans					4	20		
	Final Electrical Details						16		
	Final Electrical Specifications					8			
	Opinion of Probable Construction Cost					1			
	Subtotal - 90% Electrical	**0**	**0**	**0**	**0**	**13**	**36**	**0**	**0**
	Hours	**32**	**106**	**242**	**82**	**18**	**36**	**23**	**39**
	Salary Costs	$8,704.00	$18,126.00	$35,332.00	$10,414.00	$4,014.00	$6,156.00	$5,129.00	$5,694.00

SUBTOTAL - SALARIES:		**$93,569.00**
DIRECT NON-LABOR EXPENSES		
Document Printing/Reproduction/Assembly	$15.00	
Travel Costs	$16.00	
SUBTOTAL - DIRECT NON-LABOR EXPENSES:		**$31.00**
SUBTOTAL:		**$93,600.00**
SUBCONSULTANTS FEE:		**$0.00**
TOTAL FEE:		**$93,600.00**

APPENDIX B

City of Fayetteville
Kessler Mountain Regional Park Phase 3

BIDDING SERVICES

	WORK TASK DESCRIPTION	E-5	E-2	E-1	E-4	E-2	E-4	E-1
		T21 - Trans NW AR Muni	T21 - Trans NW AR Muni	T21 - Trans NW AR Muni	B16 - Buildings MEP Design B16	B16 - Buildings MEP Design B16	F02 - Federal Landscape	F02 - Federal Landscape
		$272.00	$171.00	$146.00	$223.00	$171.00	$223.00	$146.00
		hr	hr	hr	hr	hr	hr	hr
1.	**Civil Engineering**							
	Dispense plans and specs to prospective bidders - N/A							
	Addendums/Inquiries		16		4		12	
	Pre-Bid Meeting Assistance	1	2				1	
	Bid Opening	1	1					
	Prepare bid tabulation - N/A							
	Evaluate bids and recommend award							
	Prepare construction contracts - N/A							
	Notice to Proceed - N/A							
	Subtotal - Civil Engineering	**2**	**19**	**0**	**4**	**0**	**13**	**0**
	Hours	**2**	**19**	**0**	**4**	**0**	**13**	**0**
	Salary Costs	$544.00	$3,249.00	$0.00	$892.00	$0.00	$2,899.00	$0.00

SUBTOTAL - SALARIES:		**$7,584.00**
DIRECT NON-LABOR EXPENSES		
Document Printing/Reproduction/Assembly	$416.00	
Travel Costs	$0.00	
SUBTOTAL - DIRECT NON-LABOR EXPENSES:		**$416.00**
SUBTOTAL:		**$8,000.00**
SUBCONSULTANTS FEE:		**$0.00**
TOTAL FEE:		**$8,000.00**

APPENDIX B

City of Fayetteville
Kessler Mountain Regional Park Phase 3

CONSTRUCTION PHASE SERVICES

	WORK TASK DESCRIPTION	E-5	E-2	E-1	E-4	E-2	E-4	E-1
		T21 - Trans NW AR Muni	T21 - Trans NW AR Muni	T21 - Trans NW AR Muni	B16 - Buildings MEP Design B16	B16 - Buildings MEP Design B16	F02 - Federal Landscape	F02 - Federal Landscape
		$272.00	$171.00	$146.00	$223.00	$171.00	$223.00	$146.00
		hr	hr	hr	hr	hr	hr	hr
1.	**Project Management**							
	Preconstruction Meeting	2	2		2		2	
	Monthly Pay Requests (10 pay requests)	4	20					
	Shop Drawings/Material Submittals/RFIs	4	16	24	2	4	12	24
	On-Site Progress Observation (2 hrs per week - 10 months)	10	30					
	Prepare Change/Field Orders		16	16	2	4	8	8
	Final Project Inspection and Punchlist	4	4		4		4	
	Construction Progress Meetings (1 per month for 10 months)	8	12				8	
	Contractor Coordination	3	8					
	Subtotal - Project Management	**35**	**108**	**40**	**10**	**8**	**34**	**32**
	Hours	**35**	**108**	**40**	**10**	**8**	**34**	**32**
	Salary Costs	$9,520.00	$18,468.00	$5,840.00	$2,230.00	$1,368.00	$7,582.00	$4,672.00

SUBTOTAL - SALARIES:	**$49,680.00**
DIRECT NON-LABOR EXPENSES	
Document Printing/Reproduction/Assembly	$0.00
Travel Costs	$320.00
SUBTOTAL - DIRECT NON-LABOR EXPENSES:	**$320.00**
SUBTOTAL:	**$50,000.00**
SUBCONSULTANTS FEE:	**$0.00**
TOTAL FEE:	**$50,000.00**

CITY OF FAYETTEVILLE ARKANSAS

SELECTION COMMITTEE - VOTING RESULTS

Selection Description: RFQ 26-01, Selection 6 - Kessler Park Design - Phases 3 & 4

Selection Committee Date/Time: 5/12/2026 at 11:00 AM via Zoom

	Firms are listed in alphabetical order		
	1	2	3
Overall RANK	**Crafton, Tull & Associates, Inc**	**Garver, LLC**	**Halff Associates, Inc**
1st		𝍸	
2nd	𝍸		I
3rd	I		𝍸 I

OVERALL RANK SUMMARY SCORING

1st ranked firm: GARVER, LLC

2nd ranked firm: CRAFTON, TULL & ASSOCIATES, INC

3rd ranked firm: HALFF ASSOCIATES, INC

Tallied by:

K Fitch
Kenny Fitch, Sr. Procurement Agent
Date: 5 / 19 / 26

Trevel Young
Trevel Young, Procurement Agent
Date: 5 / 19 / 26

RFQ 26-01 Addendum 1
Garver, LLC
Supplier Response

Event Information

Number: RFQ 26-01 Addendum 1
Title: Engineering and Architectural Services
Type: Request for Qualifications
Issue Date: 11/23/2025
Deadline: 12/18/2025 02:00 PM (CT)
Notes: The City of Fayetteville, Arkansas, is requesting statements of qualifications from firms interested in providing engineering, architectural, & land surveying services for 2026 street, drainage, bridge, water & sewer, trails, parks, and other projects. All questions regarding the process shall be directed to Kenny Fitch at kfitch@fayetteville-ar.gov.

Contact Information

Contact: Kenny Fitch
Address: Procurement
Room 306
City Hall
113 West Mountain Street - Room 306
Fayetteville, AR 72701
Email: kfitch@fayetteville-ar.gov

Garver, LLC Information

Contact: Jeff Webb
Address: 2049 E. Joyce Blvd.
Suite 105
Fayetteville, AR 72703
Phone: (479) 527-9100
Email: djwebb@garverusa.com

By submitting your response, you certify that you are authorized to represent and bind your company.

Krysten Marshall
Signature

KSMarshall@GarverUSA.com
Email

Submitted at 12/18/2025 11:43:16 AM (CT)

Requested Attachments

RFQ 26-01, Engineering and Architectural Services

Garver Response_RFQ 26-01, Engineering & Architectural Services.pdf

Please attach the signed and completed RFQ form, located in the 'Attachments' tab, along with statement of qualifications.

Response Attachments

Section D_RFQ 26-01, Engineering & Architectural Services.pdf

Section D form, acknowledging Addendum 1

Bid Attributes

1	**Check Yes or No:** Pursuant Arkansas Code Annotated §25-1-503, the Contractor agrees and certifies that they do not currently boycott Israel and will not boycott Israel during any time in which they are entering into, or while in contract, with any public entity as defined in §25-1-503. If at any time during contract the contractor decides to boycott Israel, the contractor must notify the contracted public entity in writing. ☑ Yes, I agree ☐ No, I don't agree
2	**Check Yes or No:** Pursuant Arkansas Code Annotated §25-1-1002, the Contractor agrees and certifies that they do not currently boycott Energy, Fossil Fuel, Firearms, and Ammunition Industries during any time in which they are entering into, or while in contract, with any public entity as defined in §25-1-1002. If at any time during the contract the contractor decides to boycott Energy, Fossil Fuel, Firearms, and/or Ammunition Industries, the contractor must notify the contracted public entity in writing. ☑ Yes, I agree ☐ No, I don't agree

3	**Addendum Acknowledgement** By selecting "I agree", you acknowledge that you have read all addendum(s) that have been issued for this solicitation, if applicable. ☑ I agree

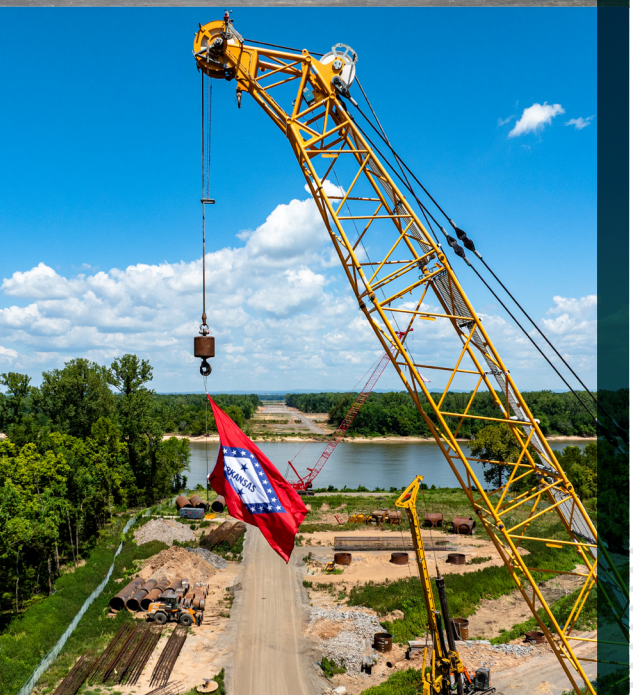

CITY OF
FAYETTEVILLE
ARKANSAS

STATEMENT OF QUALIFICATIONS

RFQ 26-01, Engineering & Architectural Services

December 18, 2025

GARVER

2049 E. Joyce Blvd., Suite 105
Fayetteville, AR 72703
TEL 479-527-9100
FAX 479-527-9101
www.GarverUSA.com

December 18, 2025

Kenny Fitch, Senior Procurement Agent
City of Fayetteville
113 W. Mountain Street, Room 306
Fayetteville, AR 72701

Re: RFQ 26-01, Engineering & Architectural Services

Dear Mr. Fitch,

As the population of Fayetteville and Northwest Arkansas continues to swell, sustainable infrastructure projects are vital for progress and to maintain the good quality of life that draws people here. Those projects require strategic coordination with a qualified, experienced team of professionals who understand your municipal footprint, your challenges, and your goals, and who have a proven track record of delivering solutions that fit your needs. ***We're committed to being that team, and we have the capabilities and resources ready to continue providing service you can count on.***

We're the go-to team for responsive service. Our Northwest Arkansas office locations are convenient, but we never rely on proximity alone. We communicate proactively to make your job easier and to get ahead of any potential issues. Whether through phone calls or emails, in-person and virtual meetings, or site visits, we communicate effectively and efficiently to keep projects on track, address concerns, answer questions, and offer input whenever needed. This is a leading characteristic of our personalized, "small-firm" approach to client service.

We offer comprehensive professional services. Our capabilities include design, planning, modeling, permitting, and more. Qualified experts in transportation, water and wastewater, aviation, field services (construction and survey), and other development disciplines have the technical competence to comprehensively address City projects of any type. In addition to in-depth capability, we have the staff capacity and resources available to complete your projects on time and without interruption.

Our proven track record of delivering for you, and our familiarity with City projects, make us adept navigators of area requirements and regulations. Our partnership with you goes back more than 20 years. That valuable experience provides us with insight and familiarity we leverage to your benefit. Many of the successful projects we've completed together can be seen at a glance on page 24 of this submittal, and they demonstrate our ability to deliver any type or size of project the City requires.

We're committed to being the team you trust to help you address current and coming challenges of population growth and more. Select the Garver team for upcoming project needs. We're ready to continue our successful partnership with you into 2026.

Please contact Jerry Martin at 479-287-4653 or at JTMartin@GarverUSA.com if you have any questions or need additional information.

Sincerely,
Garver

Jerry Martin, PE	Zach Moore, PE	Kyle Bennett, PE	Seth Yancey, PE
Arkansas Water Leader	Transportation Team Leader	Aviation Team Leader	Field Services Team Leader

Executive Summary

GARVER

Engineering News-Record
TOP 100
DESIGN FIRMS

Ranked #88 in 2025

EXECUTIVE SUMMARY

Garver has provided ***innovative, sustainable solutions*** to **Arkansas** communities for **106 years.**

From the moment we opened our doors as an engineering company in 1919, Garver has established trust with clients through quality designs and innovative solutions.

With more than a century of service, we now have more than 1,500 employees spread across 60 offices in 20 states. Our team continues to exceed client expectations with dedicated project leadership and a high level of technical knowledge. At Garver, we understand the challenges that our clients face and find the most creative solutions to meet their needs.

Specialized Experience & Technical Competence
Garver is a multi-disciplined firm with the specialized experience and technical competence to address any project for the City of Fayetteville. Garver offers a full range of engineering, architectural, and professional services for transportation, aviation, water and wastewater, survey, and construction and inspection projects. Garver practices diligent project oversight to address the smallest details from the planning stage through construction. Working with our clients from beginning to project completion gives Garver a comprehensive understanding of the importance of planning, budgeting, regulatory compliance, and meeting project schedules. For the City of Fayetteville, this experience and understanding will help deliver cost-effective improvements that meet the City's goals and objectives.

Garver is authorized to practice engineering, surveying, and architectural services in Arkansas. We have 170 Arkansas-licensed professionals on staff to sign and seal plans, specifications, surveys, and other forms. Garver carries the insurance required by the City of Fayetteville. We also operate on a sound financial basis, and our firm is strong and solvent by any standard.

Garver consistently teams with subconsultants, including certified Disadvantaged Business Enterprises (DBEs), to successfully execute projects of all sizes for our clients. Garver has been fortunate to have worked in collaboration with a number of engineering and specialty firms. Garver's commitment to DBE goes far beyond the team. We have successfully introduced competent minority firms to new areas of business through our Garver Partners Program.

Capacity & Capability

With more than 1,500 employees available company-wide, including more than 235 employees in Northwest Arkansas, Garver has the staff capacity and qualifications to provide professional services for the City of Fayetteville's upcoming projects. Garver has organized a team with extensive local project experience, supported by individuals who routinely work together and are knowledgeable in the criteria and requirements that shape the AEC process. Our familiarity with these requirements enhances our interactions with project owners, and we use that experience to develop familiar working relationships with our clients and to provide successful projects within strict and limited budgets and/or deadlines.

Past Record of Performance

Garver is committed to providing quality services that are valued by our clients; however, Garver recognizes our reputation is not based on what we say about ourselves but on what our clients and peers say about us. The numerous awards we've won and our continued designation as a top 100 firm by *Engineering News-Record* is a testament to our commitment to producing quality work and providing outstanding customer relations.

Garver consistently meets deadlines and works diligently with contractors and clients to minimize costs and deliver projects on schedule. Garver's primary goal is to execute the project work scope, so your goals and objectives are met and the project is completed on schedule and within budget. Our record of successfully completing projects on time is due to realistic project scheduling and our ability to foresee and mitigate obstacles.

Proximity & Familiarity

Garver is confident that our professionals will provide the City of Fayetteville with the most relevant experience and cost-effective means of achieving project goals. With offices in Fayetteville, Rogers, and Fort Smith, Garver is conveniently located to provide services throughout the City. Garver's local offices have more than 235 professionals and support personnel who will be utilized to meet your project needs. Our professionals are accessible and available to respond quickly to your requests and to represent your interests.

Garver's personnel has significant experience providing planning, architectural, engineering, surveying, and construction inspection services to municipalities throughout Northwest Arkansas, including the City of Fayetteville. As a result of this experience, we have become familiar with the opportunities and challenges faced when planning future improvements in this region.

Water Design Center

Our Fayetteville office includes one of our Water Design Center (WDC) locations, housing a complete team of treatment process, mechanical, electrical, automation/instrumentation and control, operations, civil, and technical production professionals focused on delivering water and wastewater projects. These teams have relevant planning and design experience that can support any water or wastewater project, from transmission lines and pump stations to complete wastewater treatment facilities.

Aviation Design Center

We also maintain an Aviation Design Center (ADC) in our Fayetteville office. These engineers are housed under one roof for increased coordination and efficiency. The Aviation Design Center has dedicated aviation engineers and technicians who provide expertise on complex projects with multiple constraints and accelerated schedules. This provides our Aviation Team with the depth to deliver large, complex projects on time and within budget and the flexibility to deliver smaller and less complex projects in a more cost-efficient manner.

Appendix A: Resumes

In this appendix, we provide resumes that detail the qualifications and experience of Garver's key personnel. We are prepared to undertake the City of Fayetteville's projects, and our personnel will be responsive to your requests, attentive to your cost-control needs, and committed to continuing the partnership with you. With Garver, the City of Fayetteville secures a resource with extensive technical expertise to provide quality services that meet your needs and expectations.

Appendix B: Project Experience

In this appendix, we provide summaries of projects that exemplify Garver's considerable expertise and experience in a broad range of disciplines. They demonstrate our ability to understand your project requirements, and show that we can provide complete project support. They also highlight the historical partnership Garver has had with the City of Fayetteville, as well as successful projects throughout Arkansas and the surrounding states.

SELECTION CRITERIA 1.

Specialized Experience and Technical Competence

GARVER

SPECIALIZED EXPERIENCE & TECHNICAL COMPETENCE

With more than **1,500 employees** spread between more than **60 offices in 20 states**, Garver offers a wide range of services with a focus on transportation, aviation, field services (construction and survey), water and wastewater.

In this section, we detail Garver's capability to provide engineering and related professional services for the City of Fayetteville.

Proposed Method for Performing Work

Garver has long recognized that complex projects require stringent controls to meet schedules and budgets. To this end, Garver approaches each project with a plan for successful project delivery developed through extensive project experience and based on proven architecture, engineering, and management principles. This proven approach guides our technical expertise, resulting in innovative solutions delivered with outstanding client service.

We develop associated construction cost estimates, a construction sequence, and phasing of project components. As the project moves forward, we continually track work progress, adjusting resources and tasks so project milestones are met. In addition, we use experienced architects, engineers, and construction engineers to develop, review, and update the cost estimates based on the project scope, phasing, and known changes in material and labor costs.

Our projects follow a clearly defined and streamlined approach of events as shown in the graphic below.

All project schedules will include the following activities:

- Hold a kickoff meeting with project staff to discuss the project goals and requirements.
- Develop a design completion schedule, listing the due dates for deliverables and periods for quality control review prior to delivery.
- Review the project plans, specifications, and references to understand the assignment before beginning a task.
- Perform reviews and checks before deliverables are sent to the City, including a technical review by multiple disciplines as necessary.

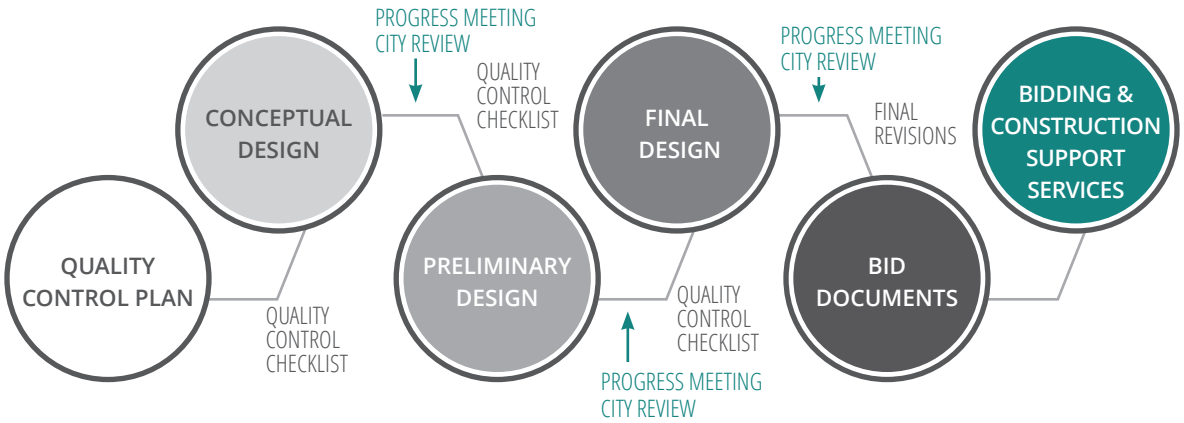

Technical Competence

Below and on the following pages, we detail Garver's capability to provide the same or similar services outlined in the request for qualifications for the City of Fayetteville.

Airfields and Airports

Garver has more than 66 years of airport design, planning, and construction administration experience with $8 billion in airport improvement projects designed over the past 10 years. We provide continual client support throughout each project, from developing grant applications for project funding through project planning, design, bidding, construction inspection, and project closeout. We also work extensively with the Federal Aviation Administration (FAA) from various regions and many state aviation agencies.

Airfield Lighting

Garver's aviation electrical staff includes 15 dedicated electrical engineers specializing in design and production of complete airside and landside project assignments. Garver's experience in electrical designs includes incandescent and LED runway and taxiway edge lighting, centerline lighting, touchdown zone lighting, specific lighting for surface movement guidance during low-visibility conditions, and various navigational aid systems. Our lighting systems utilize cutting-edge technology, such as LED fixtures and guidance signs, which reduce maintenance and operating costs.

Garver regularly proposes the replacement of existing lighting systems with an enclosed system that protects the components extending their lifespan and making the lighting system more maintenance friendly. Runway/taxiway lights and transformers are installed using concrete-encased light base cans, and all cables are installed in conduits. As a result, troubleshooting and repair work is significantly simplified and minimized due to the protection and quick accessibility that conduits and cans provide. This is more reliable, durable, and maintainable while protecting system components.

Airfield Pavement Improvements

Garver has designed and managed the construction of runway, taxiway, and apron improvements for airports of all sizes, including new construction, extension, widening, strengthening, and rehabilitation for air carrier, general aviation, and military facilities. Garver is proficient in new pavement rehabilitation techniques, including seal coating, crack filling, cement stabilization, and pavement reclamation. We also have experience with overlays, full-depth and partial-depth replacements, and joint rehabilitation. Our designers and project managers continually update their practices to incorporate both the latest FAA standards and Garver's experience on runway and taxiway projects across the nation to provide creative solutions that meet updated safety requirements.

Airport Construction

The Garver Field Services Team has the experience and ability to handle all of your project needs during each phase of construction. Our qualified staff will work as a part of your team, making certain you are kept informed of the project's progress. Effective construction project management can be the most efficient way to meet project deadlines, avoid major cost overruns, and minimize potential disputes in the future. We involve the airport and serve as your representative in the field, working with contractors and monitoring the quality of construction as well as costs and schedules. Garver provides construction services ranging from periodic observation to full-time resident observation services.

When approaching large-scale projects that will impact an entire airfield, Garver pays special attention to a project's phasing to reduce how much the project impacts airport activities and provide safe airport operations. From sequencing projects, minimizing community disruptions, and solving any construction problems, our field staff is committed to establishing

good working relationships with our clients and contractors. Our approach to construction project management promotes quality construction and helps minimize problems that cause budget and schedule overruns.

Bridges
Garver provides a full range of design services for new and existing bridges. The Garver bridge staff have significant experience in the design of steel and concrete superstructures, bridge substructures, multi-level interchanges, and pedestrian structures. Garver staff also routinely design retaining walls, box culverts, and sign support structures. Our bridge designs range from short concrete spans on pile bents to long-span major river crossings founded on large drilled shaft foundations. Unique designs include airport taxiway bridges, curved steel box girder spans, through-girder railroad bridges, curved cast-in-place concrete box spans, multimodal (highway/rail/pedestrian), and innovative designs for accelerated bridge construction (ABC) to reduce construction duration and impacts on traffic. In addition, Garver's capabilities include bridge inspection, evaluation, and load rating services. Garver also has experience providing bridge rehabilitation designs and plan details.

Civil/Site Design
Garver has the design expertise to provide quality site design and deliver a project that fits into the community as you intend. Garver offers a complete range of planning and civil design services, including site analysis; site surveys and staking; facility site planning and layouts; permitting; design of roads, parking areas, stormwater, utilities, and sewage and drainage systems; erosion and sedimentation control; master planning; and environmental assessments. Our staff conducts extensive site investigations to understand the existing conditions, so we can coordinate project designs within those parameters.

Construction Management
Garver's Field Services Team provides construction services ranging from periodic inspection to full-time resident inspection. Garver's capabilities include providing project support from advertisement to bid opening to project closeout. Garver understands that construction engineering and inspection is a process of professional management applied to a construction project, generally from start to finish, achieving multiple goals. Those goals include reviewing the time of construction and project cost, promoting job-site safety, and monitoring the construction quality. Garver's philosophy is founded on construction inspection that is a balance of proactive supervision of the contractor, enforcement of the contract documents, and thorough project documentation.

Drainage Design, Analysis, and Planning
Garver has performed drainage studies and designs for numerous municipalities. We have designed detention facilities and prepared master and localized drainage plans. Garver also has extensive experience in stormwater management master planning and flood protection. Garver has prepared stormwater master plans, drainage basin studies, Federal Emergency Management Agency (FEMA) Letters of Map Revision, and regional detention studies. In addition, Garver has reviewed drainage plans and reports for compliance with drainage criteria, regulations, and procedures.

Environmental Analysis, Remediation, and Permitting; Environmental Water Services

Garver's environmental services include performing environmental studies, permitting, and documentation in accordance with local, state, and federal regulatory agency guidelines. Our services include National Environmental Policy Act (NEPA) documentation, environmental compliance, natural and cultural resource studies, site assessment, noise modeling, environmental studies, and agency coordination. Garver has a staff of biologists and NEPA specialists qualified and experienced in many areas of natural resource studies and document preparation, including Categorical Exclusions, Environmental Assessments, Environmental Impact Statements, and Planning and Environmental Linkage Studies.

GIS Mapping

Garver's GIS services include modern GIS deployments of cloud-based GIS solutions and applications, geodatabase implementation, mobile data collection, GIS application development, data development, conversion, analysis, and presentation quality exhibit production as well as customized training. Garver's GIS Team designs and deploys cloud-based GIS solutions that help cities provide electronic document mapping and management, asset mapping, and web-based mapping applications giving citizens up-to-date information. Our staff is proficient in a wide range of mapping and design software applications used for system design, management and maintenance, map production and analysis, database design and development, user training and support, and three-dimensional (3D) modeling and visualization for GIS mapping products.

Floodplain Services

Garver has a team of engineers dedicated to hydrologic and hydraulic (H&H) modeling and floodplain delineation. Our engineers are skilled in hydrologic modeling using HEC-HMS as well as legacy software such as HEC-1. Garver excels at the development of one-dimensional (1D) steady and unsteady-state hydraulic models in HEC-RAS. We also have extensive experience in two-dimensional (2D) hydraulic modeling and have successfully applied it as a hydraulic design tool involving complex hydraulics and floodplains. We have developed and applied models in riverine, lacustrine, and coastal floodplain environments.

Landscape Architecture

Garver provides a wide array of landscape architectural services from conceptual design through construction documentation and field inspection, including site planning, design, preservation and environmental restoration, and rehabilitation of the land and environment. Our personnel have provided complete landscape design services for municipal utilities, city agencies, and other clients throughout Arkansas. Our specialties include streetscape pedestrian paving, planting, and amenities design; roadway landscape planning and design; sustainable design, Low Impact Development (LID), and LEED accreditation for site and landscape issues; low maintenance plantings; native and drought tolerant species identification; paving and plaza design; landscape site development of university, city, and medical and commercial facilities; landscape design for transit and transportation; park and trail planning and design; and wayfinding.

Master Planning

Garver has successfully completed transportation, aviation, water, wastewater, and stormwater master plan projects ranging in size and complexity and is experienced with master planning and land use planning. Master planning provides foresight to help make sure infrastructure is appropriately ahead of the growth curve and provides both long-range (20-year) and short-range (5-year) development plans to identify a path forward for current and future needs. Garver's services include assessing existing facilities, examining available infrastructure, and planning for future requirements for a range of projects, including city/government, parks, streets, wastewater, and water.

Natural Resource Planning

Garver coordinates with agencies regarding our clients' permitting and natural resources planning needs. Our ability to provide engineering, environmental, and surveying services allows us to accurately define natural resource issues that can affect project planning. These capabilities allow us to blend the built environment with the natural environment, producing mutually beneficial designs.

Parks: Strategic Planning

Garver has more than 30 years of experience designing a wide variety of parks and recreational facilities across the Southern United States, including more than 35 projects in Arkansas involving master planning, feasibility studies, and property acquisition; wetland delineation, cultural resource surveys, and environmental permitting; surveying; hydrologic analysis using HEC-HMS; schematic design, design development, and final construction document development for the civil/site, structural, mechanical/

plumbing, electrical, and architectural design of park facilities; and construction services, including construction administration, inspection, and staking. As part of our park planning and design services, Garver emphasizes sustainable, energy-efficient design and conservation practices to minimize environmental impacts to a site.

Stormwater Management
Garver has extensive experience in stormwater management, master planning, and flood protection. Garver has performed drainage studies and design, including detention and channelization, for numerous municipalities, residential and industrial developments, and airports. We have designed detention facilities and prepared master drainage plans for cities throughout our service area as well. Our capabilities include stormwater pollution prevention planning, capture, detention and retention, channelization and routing, and hydrology and hydraulics.

Streets Intersection Improvements/Design
Garver's experience includes projects on all classifications of roadways ranging from interstates to local streets. Garver's street experience includes extension, reconstruction, rehabilitation and widening, alignments on new locations, and improvements to horizontal and vertical alignments along existing locations as well as pavement design, condition analysis, rehabilitation, and reclamation. Intersection design requires a specialized understanding of design criteria, traffic operations, and standards. As part of design, we consider pavement markings, intersection radii, turn bays, and pedestrian facilities. As an alternate to traditional intersections, Garver has analyzed and designed roundabouts, J-Turns, continuous flow intersections (CFI), and diverging diamond intersections (DDI).

Surveying
Garver is capable of staffing 10 field crews and can provide many types of surveying services, including lot, boundary, right of way (ROW), route, ALTA/ACSM land title, control, construction, geodetic, tract split/lot split, subdivisions, quantity inventories, hydrographic, topographic, aerial topographic, field 3D scanning, and property line adjustment. Garver's services also include producing ROW plans that generally consist of parcel surveys, title certificates, ROW appraisal and acquisition maps, legal descriptions, and contracts to sell. These projects include surveys to determine property boundaries, legal descriptions, and ROW plans. In addition, we provide elevation certificates for commercial, residential, multi-structure, and single-family structures in designated floodplains and letters of map amendment to redefine flood zones.

Traffic Studies
Garver has performed and reviewed traffic studies for virtually every type of traffic engineering situation that may be encountered from simple, isolated intersections to complex interchange studies involving trip generation and unconventional intersections. Our staff has developed traffic studies that included gathering traffic data in the field; studying past and present traffic information; forecasting traffic volumes; performing signal warrant, geometric, operational, and safety analysis; and preparing reports outlining our analyses and recommendations for improvements.

Urban Planning
Garver's approach to urban planning is informed by one that values innovation while using time-tested planning principles to make plans that are implementable. Our staff have extensive public-sector experience and understand the realities of running a planning department. Garver's planning services include the following: community engagement and meeting facilitation, code writing, development review, code amendments, development process advising, communication with the development community, grant writing/funding assistance, downtown planning, comprehensive planning, community strategic plans, visioning and community engagement, zoning

and subdivision regulations, design guidelines, recreation master planning, bike and pedestrian plans, neighborhood revitalization plans, land use analysis studies, and annexation analysis.

Garver frequently works with cities as ongoing partners to assist with day-to-day planning functions and plan implementation. Whether it's development review, code changes, department policy, organizational restructuring, or plan implementation, we understand the challenges and have the expertise to help you achieve your goals in a timely and efficient manner. Garver's planning staff is local and our team has an understanding of Fayetteville's unique challenges and opportunities. We are passionate about cities and creating successful communities and places. This passion is what drives us to excel. We are here to be your partners in community success.

Value Engineering
Garver offers value engineering (VE) at any specified level of completion to maximize a cost-effective design. We have led and served on VE teams during formal value engineering workshops. In addition, we have assisted independent VE teams with the resources needed to conduct VE studies. Whether it is equipment or material selection options, Garver can provide formal or informal services to meet your project needs.

Wastewater Treatment Master Planning
Garver has consistently delivered creative and leading-edge solutions, while maintaining cost effectiveness for studies, designs, and master plans for wastewater treatment and collection projects across our footprint. These studies encompassed many planning horizons, which involve identifying infrastructure capacity, recommendations to replace aging equipment, optimization approaches, future

service area projections, and demand allocation. These innovations are developed with long-term sustainability and operational efficiency in mind, using advanced technology to produce sustainable results.

Wastewater SSES
Garver has the experience and tools to fully support our clients in evaluating sanitary sewer conveyance infrastructure and identify the optimum solution for rehabilitation and renewal. We efficiently perform sanitary sewer evaluation surveys (SSES) and hydraulic modeling that identifies infrastructure that is in need of rehabilitation to improve performance and reduce infiltration, inflow and system risks from failure.

Water/Wastewater Design and Management
Garver's water capabilities include planning and modeling, GIS, design, and construction inspection for new facilities as well as expanding and rehabilitating existing facilities. Garver has provided services for water treatment, transmission, distribution, pumping, and storage facilities. We have designed facilities that implement a variety of process technologies, including ozone, chlorine dioxide, microfiltration, ultrafiltration, reverse osmosis, and ultra-violet disinfection. In addition, Garver performs all aspects of wastewater treatment plant design. We also have experience in collection systems that include gravity sewer lines, grinder pump installation, vacuum collection lines, major interceptor lines, pumping stations, and force mains.

Water/Wastewater Modeling
Garver embraces a design approach that utilizes a science-based methodology for process evaluation, with calibrated simulation models as a cornerstone of that approach. These process models allow us to understand the mechanics of the different interactions occurring inside the particular plant process, thereby unlocking the potential for solutions that might not be immediately obvious.

Water Quality Monitoring
From concept to operation, Garver takes pride in helping municipalities develop the best alternative for distribution and treatment plant needs. Whether the best solution is a custom monitoring and water quality action plan or includes the integration of innovative or conventional engineered systems, Garver endeavors to fully understand municipal needs and objectives. Our team provides comprehensive in-house services to successfully implement and optimize desired outcomes. Our engineers will work as an extension of municipal staff and in close coordination with the DEQ staff.

Garver has extensive experience in drinking water studies with the goal of maintaining water quality throughout distribution. Hydraulic and water quality modeling, optimization of water treatment processes and distribution system operations, and development of practical water system monitoring plans are all tools utilized to assess and resolve water quality issues. Garver has assisted multiple utilities in developing and implementing strategies to retain consumer access to safe drinking water. Garver has considerable experience assisting utilities with the Water & Waste

Disposal Loan & Grant program and state revolving funds. Much of this experience includes distribution system modeling and identification of system modifications to minimize water age.

Wetlands

Garver has provided wetland delineations for roadway construction and various airports in Arkansas as well as several departments of transportation. Garver also provides Section 404 permitting, agency coordination, as well as wetland/stream mitigation design, planning and coordination services. Additionally, Garver has experience in mitigation area monitoring as required by U.S. Army Corps of Engineers' permits and wetland/stream mitigation construction inspection.

Additional Services

Capital Improvement Plans (CIP)

Garver understands how to bring together public and private interests to maximize benefits for investors and the community. Our proficiency in building communities extends into all types of development projects. Garver has vast experience preparing capital improvement and project plans and presenting them to funding agencies. We also routinely sequence and budget projects to fit available funding, such as multi-year phasing and bid schedules set for consecutive construction seasons.

CIP Tool

Garver developed a cloud-based web application CIP Tool to help clients plan and prioritize projects and allocate funds accordingly. This tool Includes all data that is typically included in a printed master plan document, including contingency rates, engineering costs, asset condition scores, prioritization of projects, schedule durations, and forecasting. What the tool provides that a paper copy does not is adaptability to automatically adjust project prioritization as your priorities change. The CIP Tool dashboard shows the prioritized list of projects that were identified during the master planning process. Within each project there is a prioritization score, which gives you when projects need to begin and any interdependencies relating to other projects. This information allows any changes in budget timeline or project priority to update the master plan in real time and allows you to see a snapshot of how that will affect your budget.

Pavement Management

Routine pavement upkeep is an important process that includes evaluating the pavement condition and economically providing design and specifications to produce a cost-effective solution to repair the surface. Garver's services include performing pavement analysis, pavement designs, and life cycle cost evaluations for design alternatives. Garver draws upon nearly three decades of pavement maintenance experience in developing customizable strategies to determine intended results for your pavement.

Pedestrian Facilities

Pedestrian facilities provide recreational and walkability opportunities for a safer transportation system. Garver has designed more than 150+ miles of pedestrian facilities in the past 15 years, including recreational multi-use paths and trails, pedestrian and shared-use bridges, pedestrian tunnels and underpasses, sidewalks, crosswalks, and various additional pedestrian access route structures. Garver also has led planning efforts for master transportation, bicycle, pedestrian, trail, and Americans with Disabilities Act (ADA) plans and has extensive experience planning and designing projects in compliance with the Federal Highway Administration (FHWA) and several state departments of transportation (DOT). In addition, many of our projects involve sidewalks, curb ramps, median, traffic islands, pedestrian pushbuttons and accommodations, and other pedestrian facility types. Garver has developed plans and specifications to repair, rebuild, widen, replace, and add sidewalks and trails.

Public Input Sessions
Garver understands the importance of educating and informing the public, communicating through proactive measures, and strengthening the client's brand and image. We can handle all stages of the public involvement process from planning the meeting, notifying the public, developing meeting materials, responding to comments, and providing reports.

Alternative Project Delivery (APD)
Garver's APD Team complements Garver's planning, design, construction, and program management experts to provide a strategic approach to program development, procurement management, and contract administration using the delivery method that best fits each unique client and project. Our approach to alternative delivery is to collaborate with each owner to listen, organize, plan, prepare, and implement optimal project delivery solutions. Alternative delivery methods are evolving. To effectively implement alternative delivery methods, a comprehensive understanding of available methods combined with experience implementing them is critical. In addition to design-build (DB), public agencies are exploring many other delivery methods, including Progressive Design-Build (PDB), Construction Manager/General Contractor (CMGC), Design-Build-Optimize-Refine (DBOR), and Public-Private Partnerships (P3).

Scheduling/Project Controls
Garver's project control specialists can review and validate project schedules, scope, and cost and provide assistance in claim avoidance. Our staff has experience analyzing schedule delays and disruptions, and applies best practices and industry standards to develop consistent, accurate schedules. Garver's staff can also assist with the development of contract execution and progress specifications along with appropriate processes and techniques to support the completion of construction projects.

Grant Writing
Garver boasts a robust track record in navigating the complexities of funding programs, leveraging our expertise to secure grant dollars for critical infrastructure projects. We have personnel dedicated to serving clients by identifying funding opportunities, evaluating a client's eligibility, devising competitive grant strategies, and crafting compelling applications. We have written successful grants for municipalities, local planning organizations, and state DOTs under multiple programs such as Infrastructure for Rebuilding America (INFRA), Rebuilding American Infrastructure with Sustainability and Equity (RAISE), Bridge Investment Program (BIP), Reconnecting Communities Pilot (RCP) Program, Advanced Digital Construction Management Systems (ADCMS), and several new programs offering funding opportunities for transportation, EV infrastructure, and resiliency projects.

Representative Projects

As demonstrated by the matrices on the following pages, Garver has significant experience providing engineering and related services and can provide these services for the City of Fayetteville's upcoming projects. The projects shown on the following pages are excellent examples of Garver's experience.

	Urban Planning	Environmental	Streets/Ped. Facilities	Drainage	Bridges	Traffic Analysis and Design	Civil/Dist./Collection	Structural	Electrical/Lighting	Mechanical	GIS	Architecture	Civil/Site	Airports	Utilities	Landscape Arch.	ROW/Surveys	Construction Insp.
College Ave Corridor Plan and Design *Fayetteville, AR*	✓	✓	✓	✓		✓									✓		✓	
Rupple Road *Fayetteville, AR*	✓	✓	✓	✓	✓	✓									✓		✓	✓
Nelson Hackett Boulevard Improvements *Fayetteville, AR*		✓	✓	✓	✓	✓									✓		✓	✓
Fulbright Expressway Ram Improvements *Fayetteville, AR*		✓	✓		✓	✓			✓								✓	✓
Plainview Avenue Extension *Fayetteville, AR*		✓	✓	✓	✓				✓								✓	
Cato Springs Road *Fayetteville, AR*		✓	✓		✓				✓									
Mount Comfort Road *Fayetteville, AR*	✓		✓			✓					✓							
I-49 Widening and Interchange *Fayetteville, AR*	✓		✓			✓												
Frisco Multi-Use Trail *Fayetteville, AR*		✓	✓												✓		✓	
Cato Springs Trail *Fayetteville, AR*		✓	✓	✓											✓		✓	✓
Town Branch Trail *Fayetteville, AR*		✓	✓	✓				✓	✓	✓					✓		✓	
Hamestring Bridge *Conway, AR*		✓	✓	✓	✓			✓	✓	✓		✓	✓		✓		✓	
Spring Street Parking Garage *Fayetteville, AR*	✓	✓	✓	✓		✓											✓	
Meadow Street Parking Deck *Fayetteville, AR*	✓		✓	✓		✓		✓										✓
Bentonville Master Street Plan *Bentonville, AR*	✓		✓	✓													✓	
Kessler Mountain Regional Park *Fayetteville, AR*	✓	✓	✓															
Gulley Park Sound Wall *Fayetteville, AR*	✓																	
Conway Pavement Management Program *Conway, AR*	✓																	
City of Rogers Future Land Use Plan *Rogers, AR*		✓	✓				✓	✓							✓		✓	✓
Vision Plan and On-Call Planning Services *Cave Springs, AR*		✓																
Centerton Downtown Master Plan *Centerton, AR*	✓	✓	✓	✓	✓	✓												
Springdale Future Land Use Updates and Unified Development Code *Springdale, AR*																		
ARDOT On-Call Design Services *Statewide, AR*	✓	✓	✓	✓	✓	✓											✓	
Monte Ne Road *Rogers, AR*		✓	✓	✓		✓									✓		✓	✓
Highway 12 - Walton Boulevard to Greenhouse Road *Bentonville, AR*		✓	✓	✓		✓									✓		✓	✓
Johnson Road *Springdale, AR*			✓			✓											✓	

	Urban Planning	Environmental	Streets/Ped. Facilities	Drainage	Bridges	Traffic Analysis and Design	Civil/Dist./Collection	Structural	Electrical/Lighting	Mechanical	GIS	Architecture	Civil/Site	Airports	Utilities	Landscape Arch.	ROW/Surveys	Construction Insp.
Oak Street Corridor Study *Conway, AR*		✓	✓	✓	✓	✓			✓								✓	✓
Multimodal Mobility Studies *Tulsa, OK*		✓	✓	✓		✓									✓		✓	
City-Wide Traffic Study *Fayetteville, AR*		✓	✓	✓		✓									✓		✓	✓
Lake Atalanta Bridge Replacement *Rogers, AR*		✓	✓	✓	✓	✓									✓		✓	✓
US 412 Springdale Bypass *Springdale, AR*		✓	✓		✓	✓			✓								✓	✓
Double Springs Road Bridge Rehab *Farmington, AR*		✓	✓	✓	✓				✓								✓	
Uptown Overpass *Rogers, AR*	✓	✓	✓	✓	✓	✓			✓									
Oak Street Overpass *Rogers, AR*	✓	✓	✓	✓	✓	✓					✓							
J.B. Hunt Drive *Rogers, AR*		✓	✓	✓	✓	✓												
J Street Interchange *Fayetteville, AR*		✓	✓	✓	✓	✓									✓		✓	
I-57 EIS *Multiple Counties, AR*		✓	✓	✓											✓		✓	✓
Northwest Arkansas National Airport *Benton County, AR*		✓	✓	✓				✓	✓	✓					✓		✓	
Jacksonville GIS Mapping *Jacksonville, AR*								✓	✓	✓		✓	✓					
Mapping and GIS Support *Gentry, AR*	✓	✓		✓		✓											✓	
GIS Deployment and On-Call *Washington County, AR*			✓	✓				✓										✓
GIS System Design and Migration *Elkins, AR*	✓			✓													✓	
Sedgwick Sports Complex Site Assessment *Sedgwick, KS*	✓																	
Naftzger Park *Witchita, KS*	✓																	
The Point *Huntsville, AL*	✓	✓	✓															
Southwest Trail *Multiple Counties, AR*		✓	✓				✓	✓							✓		✓	✓
Dean's Trail *Springdale, AR*		✓	✓															
Mena Park Bike *Trail Mena, AR*		✓	✓	✓														
Shillcott Bayou Pedestrian Bridge *North Little Rock, AR*			✓	✓		✓											✓	
Missouri Creek Drainage Study *Fayetteville, AR*		✓	✓	✓		✓									✓		✓	✓
Coler Creek Drainage Study *Bentonville, AR*		✓	✓	✓		✓									✓		✓	✓
Downtown Flood Study *Siloam Springs, AR*			✓			✓											✓	

	Environmental	Planning/Modeling	Process Design	Civil/Dist./Collection	Structural	Electrical/Lighting	Mechanical	GIS	Architecture	Civil/Site	Utilities	Landscape Arch.	ROW/Surveys	Construction Insp.	Scheduling/Controls	Operations
NACA WWTP Master Plan & Expansion *Bentonville, AR*	✓	✓			✓	✓	✓							✓	✓	✓
Noland WWTP Master Plan and Upgrades *Fayetteville, AR*		✓	✓													
Massard WWTP Master Plan *Fort Smith, AR*	✓	✓	✓		✓	✓	✓				✓					
Bentonville Comprehensive Performance Evaluation *Bentonville, AR*	✓	✓	✓			✓	✓									
Conway Tupelo Bayou WWTP and Pump Stations *Conway, AR*	✓	✓	✓	✓	✓	✓	✓	✓	✓	✓	✓	✓	✓	✓	✓	✓
TRA MCRWS WWTP Impr. *Midlothian, TX*		✓	✓	✓	✓	✓	✓		✓		✓			✓	✓	✓
Celina Water and Wastewater Master Plan and Modeling *Celina, TX*	✓	✓	✓	✓	✓	✓	✓	✓			✓					✓
TRA Central Regional Wastewater System Master Plan *Dallas, TX*		✓		✓							✓					
Kessler Mountain to Cato Springs Road Water Main *Fayetteville, AR*				✓									✓	✓		
Baxter & Mount Sequoyah Tanks *Fayetteville, AR*				✓												
Greenland Sewer Rehabilitation *Fayetteville, AR*	✓			✓									✓			
EL-3 & EL-5 Gravity Sewer Lines *Fayetteville, AR*				✓									✓	✓		
Elkins Outfall Line *Fayetteville, AR*	✓			✓												
SWU WWTF Phase 1 Improvements *Springdale, AR*		✓	✓		✓	✓	✓			✓			✓			✓
Porter Road Water/Sewer *Fayetteville, AR*											✓		✓	✓		
SWU Water & Sewer Master Plan *Springdale, AR*		✓		✓				✓			✓					
RWU Comprehensive Water Master Plan *Rogers, AR*		✓		✓				✓			✓					
City Corporation Water & Sewer Master Plan *Russellville, AR*		✓		✓							✓					✓
Siloam Springs WWTP *Siloam Springs, AR*	✓	✓	✓	✓	✓	✓	✓			✓	✓		✓	✓	✓	✓
Sulphur Springs WWTP Master Plan and Improvements *Sulphur Springs, TX*																
Kaw Lake Water Supply *Enid, OK*	✓	✓	✓	✓	✓	✓	✓	✓	✓	✓	✓	✓	✓		✓	✓
Okmulgee Raw Water Line *Okmulgee, OK*		✓		✓				✓					✓	✓		
Lake Thunderbird Raw Water Conveyance *Norman, OK*		✓		✓	✓								✓	✓		
Spring Creek Interceptor *Springdale, AR*		✓		✓				✓			✓		✓		✓	
Honey Hill Booster Pump Station *Searcy, AR*				✓	✓	✓	✓						✓	✓		
Central and Donnell Ridge Pump Stations *Conway, AR*	✓			✓		✓	✓			✓	✓		✓	✓	✓	
Pump Station Evaluation/Design *Hot Springs, AR*				✓		✓	✓			✓	✓			✓	✓	✓
City Corporation On-Call Services *Russellville, AR*		✓				✓					✓		✓			
Stewart Creek North Interceptor *Frisco, TX*				✓							✓		✓	✓		
Falls Creek SSES *Davis, OK*		✓		✓									✓	✓		✓

	Environmental	Streets/Ped.Facilities	Drainage	Pavement Mgmt.	Planning/Modeling	Civil/Dist./Collection	Structural	Electrical/Lighting	Civil/Site	Fire Protection	Airports	Utilities	Landscape Arch.	ROW/Surveys	Construction Inspec.
Drake Field Airport Runway Pavement and Lighting Rehab *Fayetteville, AR*	✓		✓	✓				✓			✓			✓	✓
Drake Field Airport Taxiway Lighting Rehab *Fayetteville, AR*								✓			✓				✓
Drake Field Airport Taxiway B Widening *Fayetteville, AR*	✓		✓	✓				✓			✓			✓	✓
Drake Field Airport Apron Rehabilitation *Fayetteville, AR*				✓							✓				✓
Drake Field Airport Airport Master Plan *Fayetteville, AR*											✓				
Drake Field Airport Wildlife Fencing Rehab *Fayetteville, AR*											✓				✓
Bentonville Municipal Airport Corporate Hangar Construction *Bentonville, AR*			✓	✓				✓	✓		✓	✓		✓	✓
Springdale Municipal Airport East Hangar Construction *Springdale, AR*				✓					✓		✓	✓		✓	✓
Bentonville Municipal Airport Southeast Taxiway B Extension *Bentonville, AR*	✓		✓	✓				✓			✓			✓	✓
Rogers Executive Airport Taxiway Construction and Taxilane Rehabilitation *Rogers, AR*			✓	✓		✓			✓		✓	✓		✓	✓
Siloam Springs Airport Parallel Taxiway Rehab *Siloam Springs, AR*				✓				✓			✓			✓	✓
Springdale Municipal Airport East Taxiway Extension *Springdale, AR*	✓		✓	✓				✓			✓				✓
Clarksville Municipal Airport Lighting Rehab *Clarksville, AR*								✓			✓				✓
Boone County Regional Airfield Pavement Rehab *Harrison, AR*				✓							✓			✓	✓

	Environmental	Streets/Ped. Facilities	Drainage	Bridges	Traffic Analysis/Design	Electrical/Lighting	GIS	Utilities	ROW/Surveys	Construction Insp.	Scheduling/Controls
ARDOT On-Call Surveying Services *Statewide, AR*									✓		
Lake Norfork Intake Pump Station *Mountain Home, AR*	✓								✓		
ARDOT Connecting AR Program (CAP) *Statewide, AR*	✓	✓	✓	✓	✓	✓	✓	✓	✓	✓	✓
I-49/Don Tyson Parkway Interchange *Springdale, AR*	✓	✓	✓	✓	✓	✓		✓	✓	✓	
Har-Ber Avenue Extension Phase I and II CEI *Springdale, AR*		✓	✓	✓	✓	✓		✓		✓	
Springdale 64th St Road Improvements *Springdale, AR*		✓	✓		✓	✓		✓		✓	
Gene George South Phase I CEI *Springdale, AR*		✓	✓		✓	✓		✓		✓	
Uptown Overpass *Rogers, AR*	✓	✓	✓	✓	✓			✓	✓	✓	✓
ARDOT CPM Scheduling *Statewide, AR*											✓
ARDOT 040901 Highway 22 - Gun Club Rd CEI *Sebastian and Crawford Counties, AR*		✓		✓	✓				✓	✓	✓

SELECTION CRITERIA 2.

Capacity and Capability of the Firm

GARVER

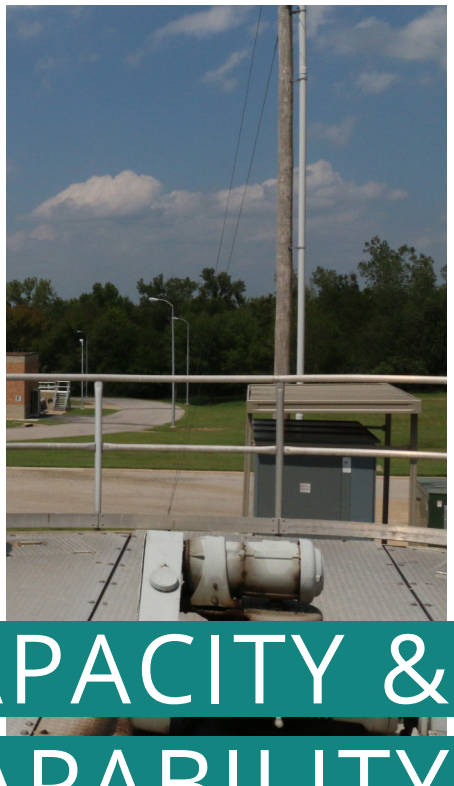

CAPACITY & CAPABILITY

Garver has the staff capacity to **start your projects immediately** and complete your projects **on time** and **without interruption.**

Garver has more than 1,500 employees company-wide, including engineers, planners, architects, environmental scientists, technicians, surveyors, and administrative support personnel.

The organizational chart on the following page lists Garver's key personnel who will provide services for your upcoming projects. Our team leaders Zach Moore, PE; Chris Randall, PE; Kyle Bennett, PE; and Seth Yancey, PE—along with the other support personnel identified in the organizational chart—will be available for project coordination and communication to complete your upcoming projects within time limitations.

The matrices that follow provide an overview of each team member's experience and qualifications, which provide the foundation to support your projects. Key personnel are indicated with an asterisk in the organizational chart. Resumes providing further information about key personnel experience and qualifications can be found in Appendix A.

TRANSPORTATION

Team Leader: Zach Moore, PE*

QA/QC
Ron Petrie, PE*

STREETS & PED. FACILITIES
Zach Moore, PE*
Joe Adams, PE
Luke Freedle, PE
Taylor Austin, EI
Tim McCormick
Kamryn Ray, EI

ENVIRONMENTAL
Cassie Schmidt*
Ryan Mountain, PWS
Colby Marshall

URBAN PLANNING
Juliet Richey, AICP, ASLA, CFM*
James Walden, AICP
Courtney Tannehill-McNair, AICP, CFM
Derek Linn, AICP

PUBLIC INVOLVEMENT
Jon Hetzel*
Caitlin Hetzel

DRAINAGE / H&H
Mark Hammons, PE, CFM*
Kathryn McCoy, PE, CFM
Allison Sites, CFM

BRIDGES
Joel Skinner, PE*
Brandon Durden, PE
Matthew Sandidge, EI

TRAFFIC ANALYSIS AND DESIGN
Michael Rebick, PE*
Nicci Tiner, PE, PTOE
Annette Smalley, PE, PTOE
Thomas Cusick, PE
Justin Seabaugh, PE, PTOE

PAVEMENT MANAGEMENT
Jeremy Porterfield, PE*

ELECTRICAL/LIGHTING
Bart Gilbreath, PE, LEED AP*
James Schmitt, PE

GIS
Drew Moffitt, GISP*
Sean Wray

PARK DESIGN/LANDSCAPE ARCH
Brent Thomas, PLA, AICP, CPSI*
Daniel Jordan, PLA
Zach Moore, PE*
Luke Freedle, PE

GRANT WRITING
Bob Cook*
Adrianne Covington Graham

WATER/WASTEWATER

Project Manager: Ryan Mills, PE*

CLIENT SERVICE MANAGER
Chris Randall, PE*

WATER DESIGN CENTER DIRECTOR
John Cutright, PE*

PROCESS
Rusty Tate, PE*
Kam Sardari, PE*

WATER DESIGN CENTER MANAGER
Andy Pruitt, PE*

PROCESS MECHANICAL
Steve Schultz, PE*

STRUCTURAL
Kipp Martin, PE, SE*

ELECTRICAL AND SCADA
Jonathan White, PE*

SITE DEVELOPMENT
Charles Locher, PE*

COLLECTION AND DISTRIBUTION
Larry Gregory, PE*
Daniel Hollinger, PE*

WATER TECHNOLOGY TEAM DIRECTOR
Randy McIntyre, PE, BCEE*

WATER AND WASTEWATER MASTER PLANNING AND HYDRAULIC MODELING
Evan Tromble, PhD, PE*

INFRASTRUCTURE PRACTICE
Maureen Carline, PhD*

WASTEWATER PRACTICE LEADER
Greg Knight, Eng

OPERATIONS
Ronnie Graves*

BIOSOLIDS
Jeff Sober, PE*

STORMWATER
Kathryn McCoy, PE, CFM

CYBERSECURITY
Clay Tidwell*

FUNDING
Tonya White

AVIATION

Project Manager: Kyle Bennett, PE*

TEAM LEADER
Chris Maestri, PE

PRINCIPAL IN CHARGE
Adam White, PE

QUALITY CONTROL
Glenn Boles

AVIATION PLANNING
John Rostas, AAE, CM*
Neil Gabrielson, AAE, ACE, ENV SP

AIRFIELD DESIGN
Scott McReynolds, PE
Greg Thomas, PE
Chris Maestri, PE
Logan Kiihnl, EI
Chase Allison, PE

AIRFIELD ELECTRICAL DESIGN
Jared Parr, PE
Quinton Smith, PE

PAVEMENT EVALUATION AND MAINTENANCE
Jeremy Porterfield, PE

HANGAR CONSTRUCTION
Greg Archer, AIA, LEED AP BD+C
Joe Kaminski, PE, FPE

FIELD SERVICES

Team Leader: Seth Yancey, PE*

RIGHT OF WAY/SURVEYS
Joshua Waite, SI*
Jeff Jones, PS*
Supported by 10 field crews company-wide

CONSTRUCTION INSPECTION
David Tag, PE*
Johney Boles
Supported by over 185 additional construction engineers and inspectors company-wide

SCHEDULING AND PROJECT CONTROLS
Mark Schwartz, CPM*

* Indicates key personnel. Resume is provided in Appendix A.

TRANSPORATION TEAM MEMBER	EDUCATION	YRS. OF EXPERIENCE	AREA OF QUALIFICATIONS/EXPERTISE
Zach Moore, PE	BSCE	18	Roadway, drainage, park, pedestrian facilities design, utility coord.
Ron Petrie, PE	BSCE	34	Roadway, drainage, pedestrian facilities design, utility coord.
Joe Adams, PE	BSCE	8	Roadway, drainage, and pedestrian facilities design
Luke Freedle, PE	BSCE	9	Roadway, drainage, park, and pedestrian facilities design
Taylor Austin, EI	BSCE	4	Roadway, drainage, and pedestrian facilities design
Tim McCormick	MA, Microbiology	22	Roadway, drainage, and pedestrian facilities design
Kamryn Ray, EI	BSCE	2	Roadway, drainage, and pedestrian facilities design
Ryan Mountain, PWS	BS, Fisheries & Wildlife Mgmt.	25	NEPA doc., env. studies, and welands
Cassie Schmidt	MS, Biology	13	NEPA doc., env. studies, and welands
Juliet Richey, AICP, CFM	Bachelor of Landscape Arch.	22	Urban planning and public involvement
James Walden, AICP	Master of Public Admin.	22	Urban planning and public involvement
Courtney Tannehill-McNair, AICP, CFM	Bachelor of Arch.; Landscape Arch.	19	Urban planning and public involvement
Derek Linn, AICP	Bachelor of Landscape Arch.	14	Urban planning and public involvement
Jon Hetzel	BS, Communications	21	Public involvement
Caitlin Hetzel	BS, Nursing	3	Public involvement
Mark Hammons, PE, CFM	MS, Water Resources	30	Drainage, H&H, and modeling
Kathryn McCoy, PE, CFM	MSCE	14	Drainage, H&H, and modeling
Allison Sites, CFM	BS, Biological Engineering	5	Drainage, H&H, and modeling
Joel Skinner, PE	MSCE	14	Structural analysis and design
Brandon Durden, PE	MSCE	8	Structural analysis and design
Matthew Sandidge, EI	BSCE	3	Structural analysis and design
Michael Rebick, PE	MSCE	20	Traffic data collection, analysis, and design
Nicci Tiner, PE, PTOE	BSCE	37	Traffic data collection, analysis, and design
Annette Smalley, PE, PTOE	MSCE	14	Traffic data collection, analysis, and design
Thomas Cusick, PE, PTOE	BSCE	10	Traffic data collection, analysis, and design
Justin Seabaugh, PE, PTOE	BSCE	12	Traffic data collection, analysis, and design
Jeremy Porterfield, PE	BSCE	13	Pavement mgmt. and airfield design
Bart Gilbreath, PE, LEED AP	MSCE	20	Electrical inspection and design
James Schmitt, PE	BSCE	13	Electrical inspection and design

TRANSPORATION TEAM MEMBER	EDUCATION	YRS. OF EXPERIENCE	AREA OF QUALIFICATIONS/EXPERTISE
Drew Moffitt, GISP	BS, Geography	20	GIS mapping
Sean Wray	—	27	GIS mapping
Brent Thomas, PLA, AICP, CPSI	Bachelor of Landscape Arch.	27	Park design & landscape architecture
Daniel Jordan, PLA	Bachelor of Landscape Arch.	9	Park design & landscape architecture
Adam Sheets	Juris Doctorate	24	Alternative project delivery
Mike Wawszkiewicz, PE, DBIA	BSCE	26	Alternative project delivery
Bob Cook	BA International Relations	29	Grant Writing
Adrianne Covington Graham	MA, Human Relations	22	Grant Writing

WATER TEAM MEMBER	EDUCATION	YRS. OF EXPERIENCE	AREA OF QUALIFICATIONS/EXPERTISE
Ryan Mills, PE	MS, Environmental	15	Environmental compliance/collection and distribution design
Chris Randall, PE	BS, Biological	11	Environmental compliance/ww and stormwater design
Jerry Martin, PE	MSCE	17	Water/wastewater process design
John Cutright, PE	MSCE	38	Water Design Center multi-discipline coordination management, process design
Rusty Tate, PE	MS, Environmental	18	Water/wastewater process design
Kam Sardari, PhD, PE	PhD, Chemical	8	Biological treatment processes
Andy Pruitt, PE	MSCE	17	Water Design Center Manager and process design
Steve Schultz, PE	MSCE	15	Mechanical process design
Kipp Martin, PE, SE	MSCE	39	Structural analysis and design
Jonathan White, PE	MBA	18	Electrical/energy optimization/application engineering
Charles Locher, PE	BS, Civil; BS, Business Mgmt	11	Site development
Daniel Hollinger, PE	BS	13	Collection and distribution
Randy McIntyre, PE, BCEE	MS, Environmental	41	Water/wastewater distribution, collection, and treatment plants
Evan Tromble, PhD, PE	PhD, Civil Engineering	21	Water and wastewater master planning and hydraulic modeling
Maureen Carlin, PhD	PhD, Civil, Environmental & Sustainable Engineering	23	Water and wastewater infrastructure
Greg Knight, CEng	MS, Environmental	21	Wastewater design and operations
Ronnie Graves	—	55	Watewater treatment operations
Jeff Sober, PE	MSCE, Environmental	24	Treatment process design, master planning, condition assessments, solids digestion, solids handling, and w/ww treatment plant operations
Kathryn McCoy, PE, CFM	MS, Civil	14	Stormwater
Clay Tidwell	—	18	Cybersecurity
Tonya White	BA	30	Funding

AVIATION TEAM MEMBER	EDUCATION	YRS. OF EXPERIENCE	AREA OF QUALIFICATIONS/EXPERTISE
Kyle Bennett, PE	MSCE	21	Airfield design and project management
Chris Maestri, PE	BSCE	10	Airfield design
Adam White, PE	BSCE	19	Airfield planning and design Quality control
Glenn Boles	BSAE	35	Quality control
John Rostas, AAE, CM	MBA	12	Aviation planning
Neil Gabrielson, AAE, ACE, ENV SP	MPA	15	Aviation planning
Scott McReynolds, PE	BSCE	19	Airfield design
Greg Thomas, PE	BSCE	9	Airfield design
Logan Kiihnl, PE	MSCE	5	Airfield design
Chase Allison, PE	BSCE	7	Airfield design
Jared Parr, PE	BSEE	13	Airfield electrical design
Quinton Smith, PE	BSEE	9	Airfield electrical design
Jeremy Porterfield, PE	BSCE	13	Pavement management, airfield pavement evaluation and maintenance
Greg Archer, AIA, LEED AP BD+C	MArch	35	Hangar construction
Joe Kaminski, PE, FPE	BSME	14	Hangar construction

FIELD SERVICES TEAM MEMBER	EDUCATION	YRS. OF EXPERIENCE	AREA OF QUALIFICATIONS/EXPERTISE
Seth Yancey, PE	BSCE	20	Construction management and inspection; structural analysis and design
Joshua Waite, SI	AS	10	Right of way/surveys
Jeff Jones, PS	—	41	Right of way/surveys
David Tag, PE	BSCE	27	Construction inspection
Johney Boles	—	44	Construction management and inspection
Mark Schwartz, CPM	BS, Accounting	44	Project control and financial analysis

SELECTION CRITERIA 3.

Past Record of Performance of the Firm

GARVER

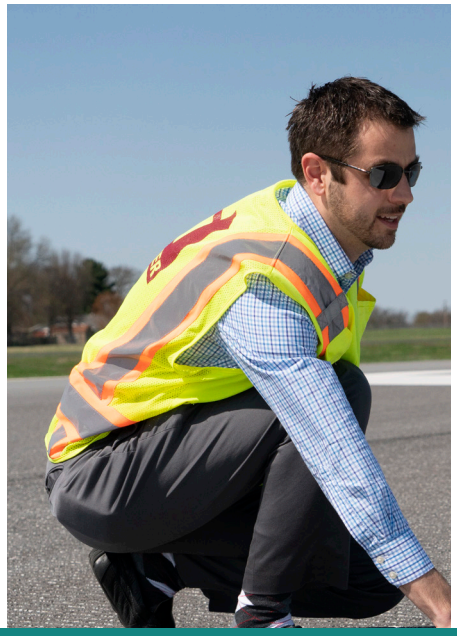
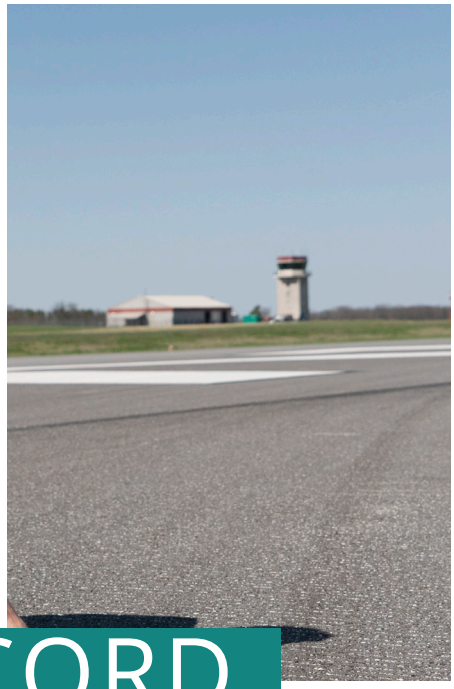
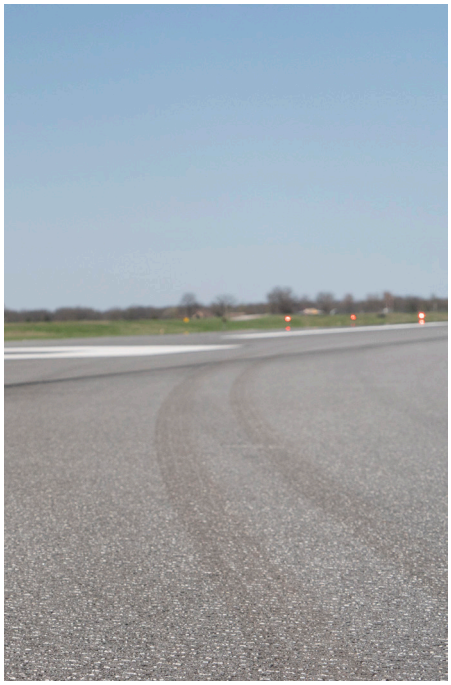

PAST RECORD OF PERFORMANCE

As a client-oriented firm, Garver focuses its time and energy on delivering **cost-effective services and customer care**. Our staff works hard to maintain its reputation and strives for excellence.

We encourage you to contact any of our references listed below to verify the quality of our work and our ability to coordinate and deliver your projects on time and within budget.

LANCE MCAVOY *Utility Director* **City of Fort Smith Utility Department** 801 Carnall Avenue, Suite 500, Fort Smith, AR 72901 479-494-3908; lancem@fortsmithar.gov	**MELISSA MCCARVILLE** *City Business Manager* **City of Farmington** P.O. Box 150, Farmington, AR 72730 479-267-3865; melissamccarville@cityoffarmington-ar.gov
STEVE MALLETT, PE *General Manager* **City Corporation - Russellville** P.O. Box 3186, Russellville, AR 72811 479-968-2080 x113; smallett@citycorporation.com	**BEN PETERS, PE** *Director of Engineering* **City of Springdale** 201 Spring Street, Springdale, AR 72764 479-271-5993; bpeters@springdalear.gov
JENNIFER ENOS *Wastewater Facilities Director* **Springdale Water Utilities** 526 Oak Avenue, Springdale, AR 72765 479-756-3657; jenos@springdalewater.com	**BRENT DOBLER** *Operations Manager* **Rogers Water Utilities** 601 S. 2nd Street, Rogers, AR 72757 479-621-1142; brentdobler@rwu.org
JAMES CLARK *Public Works Director* **City of Tontitown** 201 E. Henri de Tonti Boulevard, Tontitown AR 72770 479-361-2700, pwdirector@tontitownar.gov	**DAN WEESE, PE** *Transportation Deputy Director* **City of Bentonville** 3200 SW Municipal Dr., Bentonville, AR 72712 479-254-2024; dweese@bentonvillear.com

Control of Costs

Garver consistently meets requirements within the amount contracted for services and works diligently with subconsultants and clients to minimize cost increases. Change orders can be an owner's nightmare. We work to complete all contractual obligations within the original budget to avoid contract amendments, which can impact funding. In addition, Garver's staff can conduct a constructability review to minimize alterations.

For each project assigned, one of Garver's Team Leaders Zach Moore, PE; Chris Randall, PE; Kyle Bennett, PE; and Seth Yancey, PE, will be responsible for cost control and will lead project development, including the preparation of cost estimates. They will work closely with the Garver team and City of Fayetteville to provide estimates that are accurate, complete, and realistic and includes all phases of construction. They will monitor the cost throughout the project execution using weekly cost and variance analysis reports to satisfy design objectives and meet specific project requirements. Garver's in-house construction inspectors can also review cost estimates from the contractor's perspective to enhance the accuracy and constructability during the review process.

Constructability reviews are conducted so the project can be built as intended and the end product can be used, operated, maintained, and sustained for its intended purpose. This review includes both discipline-specific and interdisciplinary oversight and reduces ambiguities in the construction bid package so prospective bidders can respond in an informed manner with realistic costs. A constructability review can make a project a win-win for Fayetteville, Garver, and the contractor, producing such advantages as concise presentation of plans and contract documents, lower bid price by contractors, reduction in construction problems, and fewer change orders.

To avoid any miscommunication, all of our key personnel will remain available and involved throughout the life of the project. This will help maintain continuity and help make sure the design intent is carried through construction. Garver believes that communication is especially critical during construction to avoid added costs and delays. Our priority is to limit the impact of these unforeseen variables by identifying the problem and offering multiple solutions quickly for consideration. We also will work closely with our clients to find alternatives to reduce costs.

Quality of Work

Garver is about quality, providing valuable services, meeting budgets, and finishing projects on time.

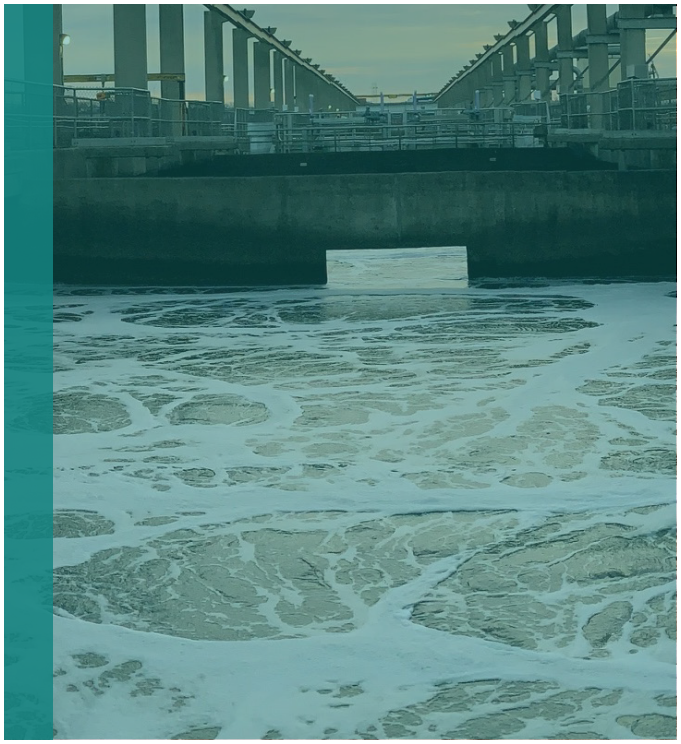

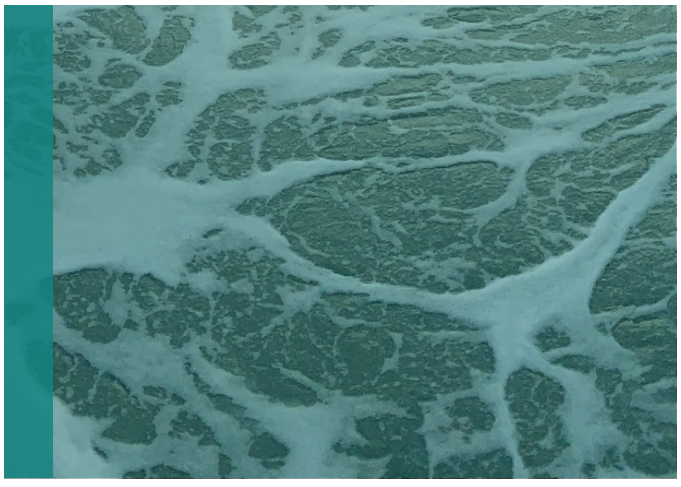

Our numerous award-winning projects testify to the lasting quality of our work, as does our place on *Engineering News-Record's* United States top 100 design firms list, top 20 aviation design firms list, and top 20 airport facility engineering firms list. Garver emphasizes customer service, and our strong work ethic results in quality projects and lasting relationships. The positive feedback we receive from our clients highlights our commitment to delivering quality projects.

Garver has established quality control processes and procedures to maximize the quality of our services and products. Our quality control procedures are developed to detect and prevent deficiencies early in the design process and is used for all stages of the design process. Garver's Team Leaders Zach Moore, PE; Chris Randall, PE; Kyle Bennett, PE; and Seth Yancey, PE, will develop a specific design quality control plan. They will oversee the project execution and work to implement independent technical reviews, cross-discipline reviews, and peer/senior reviews based upon the level of project complexity.

Ability to Meet Schedules and Deadlines

We approach each project with a plan for successful delivery based on our extensive experience and proven principles. Our primary goal is to execute the project work scope so your goals and objectives are met and the project is completed on schedule and within budget. Our record of successfully completing projects on time is due to realistic project scheduling and our ability to foresee and mitigate obstacles. As the project moves forward, we continually track the progress of work and adjust resources to meet tasks and project milestones.

> "I can, without reservation, recommend the Garver team. They bring a level of professionalism and depth of knowledge to the job that would be hard to find elsewhere. From personal experience, the most important thing Garver did was to listen to our team, hear our concerns, and develop several alternative options for addressing our current and future needs. The Garver Arkansas Water Team's expertise and quality of service is unrivaled in our area!"
>
> *Jennifer E. Enos*
> *Wastewater Facilities Director, Springdale Water Utilities*

We also provide general review of work as construction progresses to ascertain that the contractor is conforming to the design intent and minimizing cost increases during construction. Our construction inspectors have the experience and confidence to thoroughly review plans and ask the appropriate questions before the contractor starts each phase of the work.

SELECTION CRITERIA 4.

Firm’s Proximity to and Familiarity with the Area

GARVER

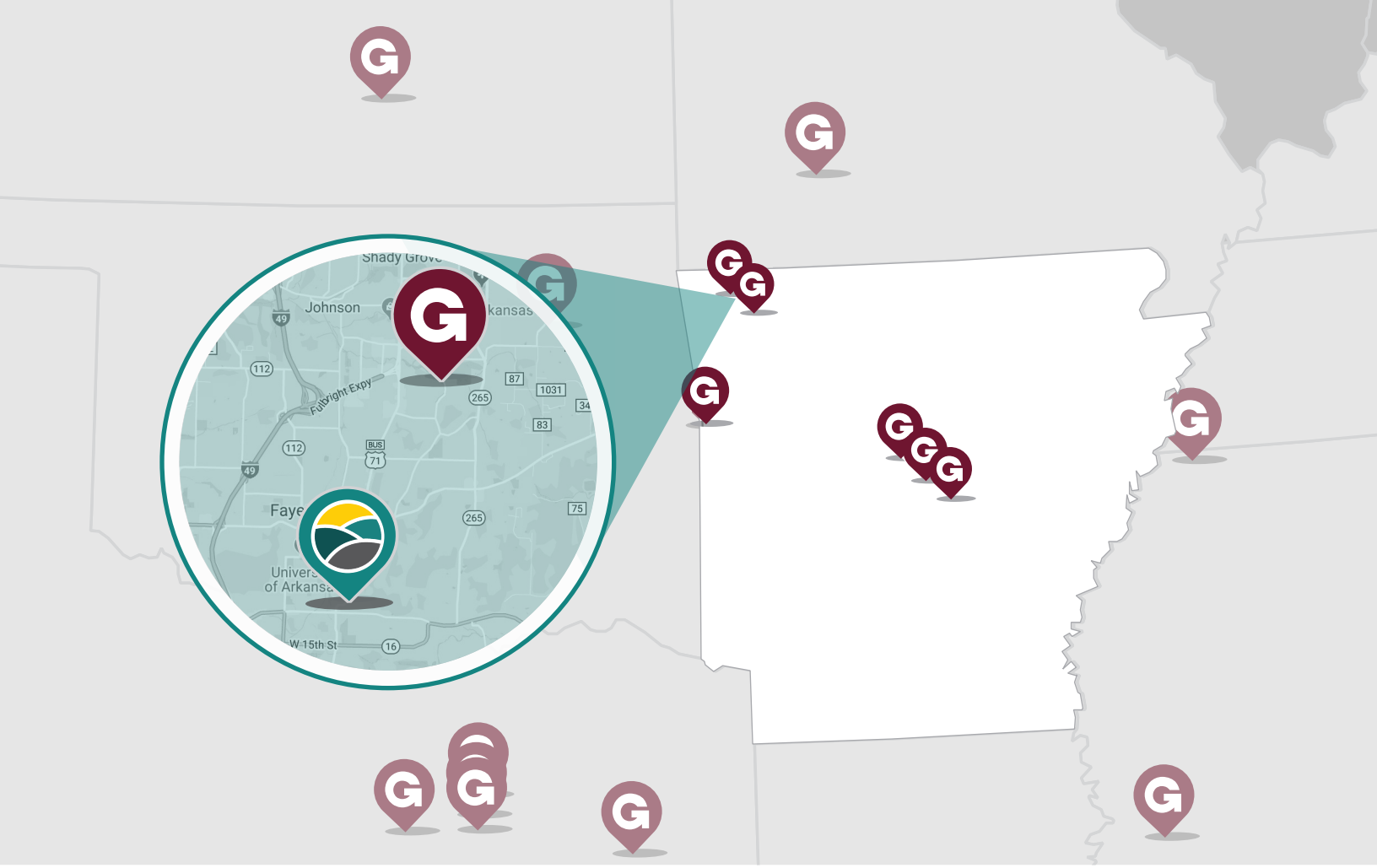

PROXIMITY & FAMILIARITY

Garver's success **in Arkansas** is the result of ***small-firm attention*** combined with the resources of a regional staff.

With our convenient office location in Fayetteville, we excel at providing services in a fast and cost-effective manner. Through proactive responsiveness, our team will make your job easier. Whether through phone calls, in-person and virtual meetings, emails, or on-site visits, we work to alleviate any concerns or questions for the City of Fayetteville and offer input and advice.

As a trusted advisor, Garver has developed collaborative work relationships in Fayetteville, as well as surrounding communities throughout Arkansas. Given our proven history, we know your needs are critical, and we have what it takes to lead your projects from concept to completion. The graphic on the following page highlights some of Garver's experience in Fayetteville.

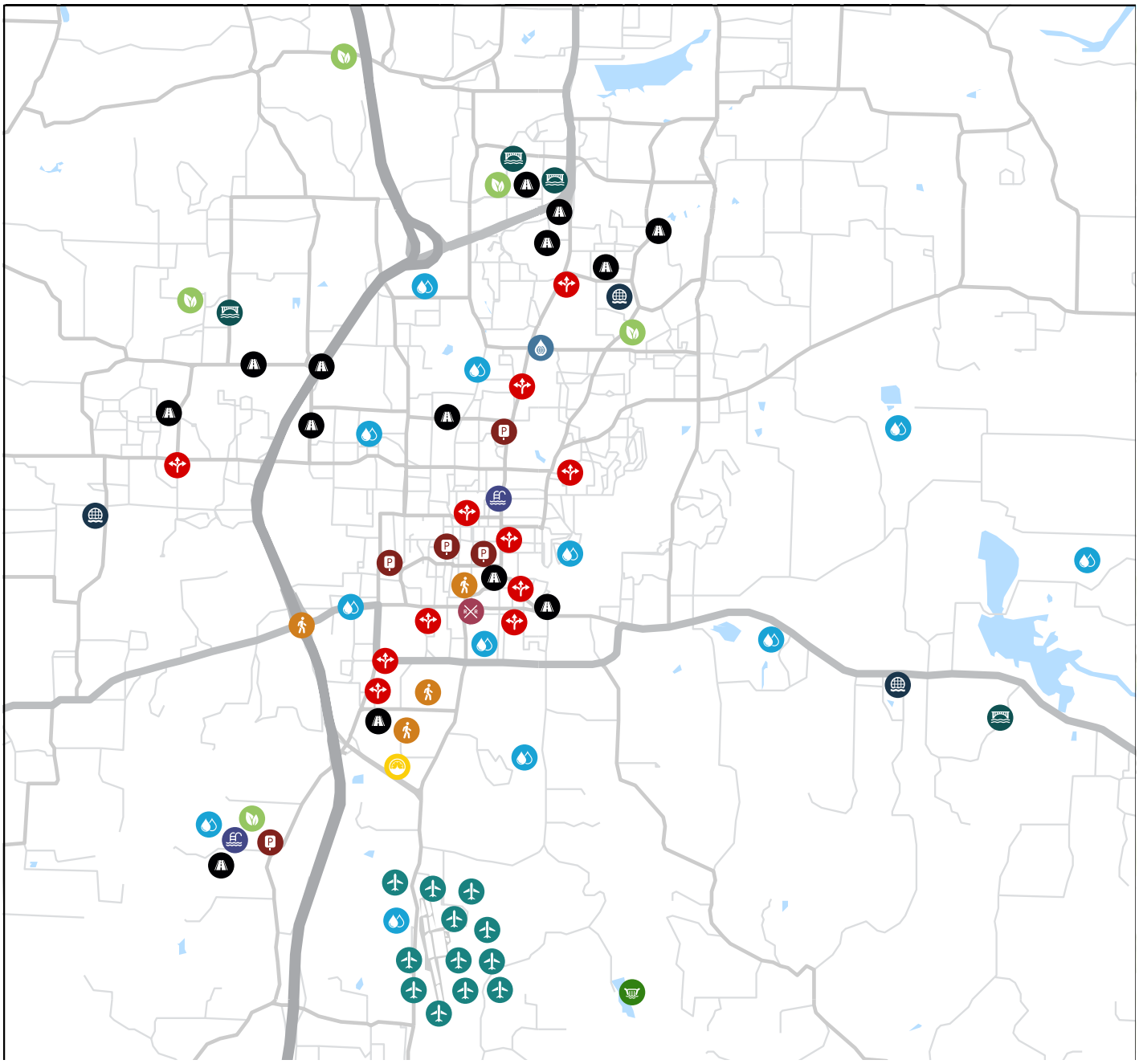

LEGEND

- Aviation
- Bridge Design
- Drainage
- Environmental Studies
- Fueling Station
- Hydraulics/Hydrology
- Parking Facility
- Railroad Underpass
- Recreational Facility
- Roadway Design
- Spillway Repair
- Traffic Studies
- Trails
- Water/Wastewater Projects

APPENDIX A

Key Personnel Resumes

GARVER

TRANSPORTATION

Keep an eye out for this symbol denoting our staff in Northwest Arkansas

Zach Moore, PE

Transportation Team Leader, Streets & Pedestrian Facilities, Park Design

Education
BS, Civil Engineering

Registration / Certifications
Professional Engineer
AR, 15657

Zach Moore is a project manager on our Transportation Team with 18 years of experience. His responsibilities include managing projects, coordinating with clients and project stakeholders, and writing specifications. Zach's transportation experience includes new and reconstructed roadways, highway interchanges, roundabouts, highway overpass projects, master street plans, bond program project development, major and minor drainage systems, site design, trails, recreational and athletic park design, and pedestrian facilities. He has served as contract city engineer for multiple cities and counties, and his responsibilities included review of development projects and addressing drainage and other engineering issues that arose within a given jurisdiction. Zach has participated in traffic studies that include intersection analysis, traffic mitigation, trip generation, warrant analysis, and signalization design. He has also evaluated city design standards for roadways, trails, and pedestrian facilities. He is proficient in AutoCAD, MicroStation, InRoads, AutoDesk HyrdaFlow, and HEC-RAS.

Ron Petrie, PE

QA/QC Manager

Education
BS, Civil Engineering

Registration / Certifications
Professional Engineer
AR, 9113

Ron Petrie serves as Garver's Quality Assurance and Quality Control manager, bringing over 34 years of experience in project production and oversight. He leads QA/QC efforts by updating processes, supervising multiple municipal teams, and ensuring that every project exceeds Garver's high standards. Ron specializes in organizing and leading teams, consistently guiding them to deliver outstanding results. He takes a hands-on approach to the projects he QA/QC checks, making sure the highest quality is achieved and delivered. Known for providing timely, dependable, and cost-effective solutions, Ron is someone people know that can count on.

Cassie Schmidt

Environmental

Education
MS, Biology

BS, Zoology

Cassie Schmidt is an Environmental Team Leader with 14 years of environmental data collection and assessment experience. She has knowledge of local, state, and federal environmental regulations and guidelines. Her experience includes preparing NEPA documents, conducting Phase I and II Environmental Site Assessments; completing alternative analyses and functions and services assessments to satisfy Section 404 permitting requirements; and drafting wetland and stream mitigation plans.

Juliet Richey, AICP, CFM
Urban Planning

Education
Bachelor of Landscape Architecture

Registration / Certifications
American Institute of Certified Planners, 30453

Certified Floodplain Manager, AR-06-00104

Juliet Richey is an urban planner with 22 years of experience working with municipalities and counties across Arkansas. Her experience includes comprehensive plans, master street plans, special area plans, development review, policy and process review and modification, overlay districts, and drafting a variety of planning and zoning regulations for municipalities. She has in-depth knowledge of local government structure, governmental funding mechanisms, infrastructure, and the needs of Arkansans. Before joining Garver, Juliet spent 14 years working as a planner and planning director in the public sector. Her responsibilities included overseeing a planning department, floodplain and conditional use permits, zoning, variances, large-scale developments, and long-range planning. She has provided consulting planning/public outreach services over the past seven years for many cities throughout the state.

Jon Hetzel
Public Involvement

Education
BS, Mass Communications

Jon Hetzel is a communications manager and has 21 years of experience. Jon's responsibilities include developing and overseeing the strategy, development, and implementation of communication tools for the public involvement process. This includes writing communication plans and public involvement summaries; coordinating stakeholder meetings; conducting public involvement meetings and hearings; and implementing localized outreach plans to notify and engage with the public. Jon's responsibilities also include using Microsoft Power BI for business analytics; overseeing the development of project logos and branding; providing content for and managing project websites; and preparing news releases, travel impact notices, and other announcements related to projects.

Mark Hammons, PE, CFM
Drainage and Hydrology/Hydraulics

Education
MS, Civil Engineering (Water Resources)

BS, Civil Engineering

Registration / Certifications
Professional Engineer AR, 9819

Certified Floodplain Manager, AR-07-00156

Mark Hammons is a H&H team leader and has 30 years of experience. Mark's experience includes drainage master plans, transportation hydraulic design, flood insurance studies, flood reduction design, coastal restoration studies, reservoir studies, and dam break studies. His modeling capabilities include advanced 2D hydrodynamic modeling for complex projects. He has hydraulic design experience with roadway bridges and culverts, interior levee drainage systems, stormwater pump stations, open channels, detention basins, reservoirs, irrigation systems, storm sewer networks, and floodplain delineation. He is knowledgeable in GIS analysis for H&H studies and mapping. He is proficient with multiple water resources computer modeling and mapping software packages, including but not limited to HEC-RAS (1D and 2D), SRH-2D, RMA-2, SMS, HEC-HMS, HEC-1, HEC-2, UNET, HEC-DSS, HEC-5, EPA SWMM, and ArcGIS.

Joel Skinner, PE
Bridges

Education
MS, Civil Engineering

BS, Civil Engineering

Registration / Certifications
Professional Engineer
AR, 16458

ACI Concrete Field Testing Technician Grade I

Joel Skinner is a project manager and bridge team leader with 14 years of experience. Joel's responsibilities include leading project engineers and designers through all aspects of bridge design and plan production. His design experience includes preparing layout drawings for bridge rehabilitation and new construction; preparing final project plans; designing structural members for bridge substructures including multi-column, hammerhead piers with drilled shaft or driven pile foundations as well as superstructures including concrete deck with rolled beams and plate girders; calculating construction quantities; and writing design specifications for bridge widening and replacements, hydraulic structures, and grade separation structures.

Mike Rebick, PE
Traffic Analysis and Design

Education
MS, Civil Engineering

BS, Civil Engineering

Registration / Certifications
Professional Engineer
AR, 18454

Michael Rebick has 20 years of experience and progressive responsibility in civil engineering consulting, specifically in the transportation/traffic field of transportation operations and Intelligent Transportation Systems (ITS). His qualifications include extensive hands-on planning, field investigation, design, construction management, and project management. Michael's background includes service to public and private-sector clientele. He is also responsible for client management, marketing, and business development activities.

Jeremy Porterfield, PE
Pavement Management

Education
BS, Civil Engineering

Registration / Certifications
Professional Engineer
AR, 18915

Jeremy Porterfield is a project manager who is an expert in pavement analysis and recommendations. Jeremy oversees projects from start to finish and has hands-on experience with each step of the process. His experience includes program design and management, inspections and inspector training, pavement thickness evaluations, automated pavement data collection, and developing custom deliverables to precisely suit a client's needs. Jeremy is skilled at using BI tools to solve real-world problems in creative and innovative ways.

Bart Gilbreath, PE, LEED AP
Electrical/Lighting

Education
MS, Electrical Engineering

BS, Electrical Engineering

Registration / Certifications
Professional Engineer AR, 13836

LEED Accredited Professional, 10097104

Bart Gilbreath is Garver's Electrical Resiliency and Illumination Leader with 20 years of project design and management experience. Bart has assisted clients with a range of electrical improvements, often providing cutting-edge designs to improve resiliency and reliability of electrical systems. He is intimately involved in each project from conception to design through construction and closeout. His project experience includes lighting design from local streets to interstate highways, Federal Aviation Administration (FAA) airports, and U.S. Army Corps of Engineers navigational waterways. He is versed in various state DOT lighting standards, Illuminating Engineering Society (IES) recommended lighting practices, and various lighting modeling software packages.

Drew Moffitt, GISP
GIS

Education
BS, Geography

Registration / Certifications
Certified GIS Professional, 67799

FAA Remote Pilot License, 4258494

Drew Moffitt is Garver's Geospatial Solutions Leader with 20 years of experience managing and working with advanced spatial analysis at a statewide scale, database development, and online GIS programming, scripting, and deployment. He has worked with clients to inform stakeholders on statewide asset inventories, complex pre-screening reporting, and large data analysis and reporting around clear-zone funding. He also has specialized experience working with CAD and GIS data and is well versed in converting CAD drawings or subdivision plans into Stormwater GIS data. Drew's previous experience includes developing the PAgis Stormwater Work Plan. He was tasked with overseeing the creation of the standards and processes that are required for all PAgis member agencies. Drew has supported development of several databases and web-based portals using ArcGIS and PowerBI, including projects for departments of transportation in Arkansas, Kansas, and Missouri.

Brent Thomas, PLA, AICP, CPSI
Park Design/Landscape Architecture

Education
BA, Landscape Architecture

Registration / Certifications
Registered Landscape Architect AR, 9593

CLARB Certified Landscape Architect, 1571

Certified Playground Safety Inspector, 55070-725

American Institute of Certified Planners, 36295

Brent Thomas is a planner and landscape architect with 27 years of experience. Brent is passionate about projects that enhance communities through sound planning and quality design. Always looking for ways to better the communities in which he works, Brent enjoys bridging the technical realm of engineering with the physical realm that affects how users interact with and see a project—a positive combination of art and science. With past projects in Arkansas, Colorado, Kansas, Missouri, Oklahoma, and Texas, his experience includes education, retail, office, and medical site planning; land planning; streetscapes; park and recreation facilities; bicycle planning and design; and wayfinding and graphic design.

Education
MA, International Economic Policy

BS, International Relations & History
Master of Business Administration

Bob Cook
Grant Writing

Bob Cook is Garver's Government Relations Director and has 29 years of experience working with the local, state, and federal government. Bob works across all business lines to improve Garver's government ties and further strengthen those key relationships. He is uniquely experienced at positioning projects for grant funding. His work with state and federal officials gives him insight into what the grant reviewers are looking for in a successful application. Recent work includes serving as an advisor for the $2M I-30 Deck Park Study Reconnecting Communities Pilot (RCP) Grant in Little Rock, Arkansas. He is also adept at organizing political support at all levels to promote grant applications. Bob spent his early career as staff to multiple members of Congress and served as Wisconsin Governor Tommy Thompson's representative in Washington, DC. He was later appointed by Governor Thompson to serve in the Wisconsin Department of Transportation leadership.

WATER & WASTEWATER

Chris Randall, PE

Northwest Arkansas Water Team Leader

Chris is Garver's Northwest Arkansas Market Leader with 11 years of experience working as a water resource engineer. With his wide range of experience, Chis has touched every aspect of the water cycle, working full circle as a state regulator, environmental compliance consultant, wastewater & stormwater design engineer, and project manager. No stranger to environmental compliance, his prior experience includes two years working with ADEQ and eight years as an environmental permitting expert, where he worked with clients in over 20 states in a variety of regulatory and various engineering fields. During this time, Chris had extensive onsite experience solving and managing complex environmental compliance and regulatory challenges in various facilities across the manufacturing industry.

Education
BS, Biological Engineering - Ecological Engineering

Registration / Certifications
Professional Engineer
AR, 18334

Ryan Mills, PE, CFM

Senior Project Manager

Ryan is a Senior Project Manager with 15 years of experience. An expert in environmental compliance for stormwater, air, emergency response, and wastewater plant operations, he also has a wide variety of project experience, including water and sewer distribution and collection system design, lagoon treatment system upgrades, lead service line identification, floodplain management, elevated storage tank rehabilitation, and existing wastewater treatment system upgrades. Ryan has helped the City of Fayetteville advance wastewater treatment, having contributed to previous City water and wastewater projects. He led the Arkansas Department of Agriculture Water Service Line Inventory Program, and he served on the City's Environmental Action Committee for five years, acting as both Vice Chair and Chair. He is committed to understanding the details of client challenges so that all client needs and objectives are fully met.

Education
MS, Environmental Management

BS, Mechanical Engineering

Registration / Certifications
Professional Engineer
AR, 16161

Certified Floodplain Manager
AR, AR-23-00402

Jerry Martin, PE
Principal in Charge

Education
MS, Civil Engineering (Environmental Engineering)

BS, Civil Engineering

Registration / Certifications
Professional Engineer
AR, 17428

For 14 years, Jerry has provided customized solutions to municipalities' most pressing water and wastewater process concerns. His passion for process design and the nuances of treatment methods drives him to work closely with clients and advance their facilities. Jerry's operation and maintenance background, which he gained while serving as a machinist mate in the Navy, has enabled him to see projects from both sides, creating designs that not only increase efficiencies but operator safety. His designs are intended to serve the long-term needs of communities by using advanced treatment methods and sustainable solutions. As Garver's Arkansas Water Team Leader, Jerry uses his skills and knowledge to drive project objectives successfully forward, while allocating the necessary resources to meet those objectives. Through his streamline management approach, he makes sure that every client gets the best, responsive service from start to finish.

John Cutright, PE
Water Design Center Director

Education
MS, Civil Engineering

BS, Civil Engineering

Registration / Certifications
Professional Engineer
AR, 11920

John's 38 years of water and wastewater experience include transforming over 60 plants from conventional to advanced nutrient removal. He has provided facilities with the necessary support to improve the day to day functioning of the plant. John approaches each project by breaking down the facility's needs and evaluating its capabilities and identifying each process' limitations. He has expertly created process models to anticipate results and deliver maximized use of plant assets. John maintains involvement from start to finish with complex projects, ranging in size from 1 MGD to 1 BGD. Additionally, he has routinely followed biological nutrient removal projects through commission and trained personnel on the new technology to improve their efficiency and secure a safe operating environment.

Rusty Tate, PE
Process

Education
MS in Environmental Engineering, Water Resources

BS in Biological Engineering, Ecological/ Environmental

Registration / Certifications
Professional Engineer
AR, 15423

Grade IV Water Treatment Operator
AR, 08445T4

Grade IV Water Distribution Operator
AR, 08445D4

Class II Wastewater Treatment Operator
AR, 010414

Rusty has spent 15 years modeling processes to improve their safety and efficiency. He has worked on over 25 wastewater treatment projects from conceptual design to construction administration. Rusty utilizes models to look at different potential process arrangements to gauge the best results, while guiding designs to make plans more efficient and easier to implement, which can increase capacity and performance. Having worked as an operator, Rusty understands needs and concerns of operations and maintenance staff. His insight into their day-to-day procedures allows him to construct designs in a manner that is easily implementable for operators, increases operator safety, and improves overall plant efficiency.

Education
PhD, Chemical Engineering

BS, Chemical Engineering

Registration / Certifications
Professional Engineer
AR, 20764

Kam Sardari, PhD, PE
Process

When it comes to evaluating process alternatives, there are a wide range of options and not every option is best suited for a client's needs. Through his in-depth understanding of various treatment processes, Kam works closely with clients to identify their needs, concerns, and future goals and determine the best alternative for them. He's worked on projects ranging from .5 MGD up to 350 MGD, which has given him an understanding of how different scale/size facilities often have different needs and challenges. Kam often uses process modeling to evaluate the biological treatment performance (phosphorous removal, nitrogen removal, etc.) of a facility and simulate a new process' effect on those conditions. Through these models, he's able to identify the best treatment options for preliminary to primary treatment, secondary, and tertiary treatment. He always strives to provide the best solution for both a client's current and long-term needs..

Education
MS, Civil Engineering

BS, Civil Engineering

Registration / Certifications
Professional Engineer
AR, 15176

Andy Pruitt, PE
Water Design Center Manager

Andy leads Garver's Fayetteville Water Design Center (WDC) and serves as a process mechanical engineering expert. He's extremely proficient in the design of treatment, hydraulics and pumping systems for water and wastewater treatment plants. Andy's approach to projects looks at ways to solve concerns in new and innovative ways that will exceed client expectations. He does this by working closely with clients to identify their needs and goals, then aligns design tasks and criteria with those goals. Andy's expertise focuses on the physical treatment of processes and pumping systems by looking at hydraulic models and flows to determine the most effective treatment alternatives. As the WDC leader, he makes sure that each of Garver's projects has the resources and staff necessary to successfully execute the project. He coordinates with the right skills and expertise to align with project goals, always making sure that our regional water and wastewater teams have the full support of the WDC's resources.

Education
MS, Civil Engineering, Water/Wastewater

BS, Engineering, Chemical

Registration / Certifications
Professional Engineer
AR, 20202

Steve Schultz, PE
Process Mechanical

Steve Schultz is a project engineer at Garver's Water Design Center with 15 years of experience as a process engineer and eight years of experience as a water and wastewater project engineer. During his time at Garver, Steve has been involved in the design of both water and wastewater treatment plants. His approach to design is to work with the client to identify what their needs and goals are, and create customized project solutions based on those insights. He has worked on projects in Arkansas, Oklahoma, North Carolina, and Texas.

Kipp Martin, PE, SE
Structural

Education
MS, Civil Engineering

BS, Civil Engineering

Registration / Certifications
Professional Engineer
AR, 15272

Structural Engineer
OR, 16276

Kipp Martin is a structural engineer on Garver's Water Team with 39 years of experience in planning, designing, and constructing water and wastewater treatment plants, pump stations, and reservoirs. He has successfully worked with fish screens, fish ladders, and dam and river hydraulic structure modifications. Kipp also has extensive experience in project budgeting, drawing layout, CAD drafting, and supervising junior engineers and drafters. He is skilled at working on projects for remote offices and locations and is familiar with finite element analysis software, structural design software, and AutoCAD and MicroStation software. Kipp's skills include general structural design, project structural budgeting, project management, concrete hydraulic structures, concrete design, steel design, masonry design, and seismic analysis..

Jonathan White, PE
Electrical and SCADA

Education
Master of Business Administration

BS, Electrical Engineering

Registration / Certifications
Professional Engineer
AR, 16232

Jonathan has focused his career on providing electrical and I&C designs for a wide range of water and wastewater projects. He works with the process team to understand treatment processes and then determine how best to integrate electrical systems for those technologies. He also discusses daily operations with plant staff to understand the needs of their facility, control methodologies, and from there, automates processes to meet operators' specific needs.

Jonathan also brings a well-rounded background and depth of understanding for water and wastewater treatment. He knows that if the electrical and I&C systems aren't reliable and structured with redundancy then even the best treatment processes can't operate efficiently. Using this knowledge, he's able to look at all aspects of a project and determine key factors and design criteria necessary to creating a reliable system. So, he navigates existing constraints and evaluates equipment and plant layout to create electrical designs that maximize system reliability.

Charles (Preston) Locher, PE
Site Development

Education
BS, Civil Engineering

BS, Business Management

Registration / Certifications
Professional Engineer
AR, 22381

Preston is a civil engineer and project manager on Garver's Water Team with 11 years of experience. Preston leads the Fayetteville, AR Site Civil Group within the Water Design Center, providing site civil design for Garver's treatment plant projects. In addition to all areas of water and wastewater infrastructure design, his background includes land development project experience of various aspects within civil engineering design, including commercial and residential development, street and stormwater drainage design with project management experience in each. Preston's attention to detail and ability to visualize design concepts ensures that projects are efficiently designed with precision, meeting both client's functional requirements and aesthetic goals.

Daniel Hollinger, PE
Collection and Distribution

Education
BS, Civil Engineering

Registration / Certifications
Professional Engineer
AR, 17421

Daniel Hollinger is a project manager on Garver's Arkansas Water Team with 13 years of experience. His responsibilities include water and wastewater conveyance, pump station design, water storage design, water distribution modeling, and general site/civil design. His experience includes large diameter transmission line design, water storage tank design, utility relocation, pump station design, master plan reports, water distribution modeling, and sewer rehabilitation projects. Daniel is responsible for preparing contract documents, technical specifications, construction drawings, contractor oversight, submittal reviews, and construction administration.

Randy McIntyre, PE, BCEE
Water Technology Team Director

Education
MS, Civil and Environmental Engineering

BS, Civil Engineering

Registration / Certifications
Professional Engineer
TX, 64930

Randy's ability to see projects from multiple perspectives comes from his well-rounded experience. He has held positions with varying responsibilities on a wide range of projects including water/wastewater treatment, collection and distribution systems, pump stations, master planning, construction management, and surveying. Randy understands how every system and operation work together, so when issues arise, he can identify the source and develop designs that effectively improve the whole system.

He approaches each project by keeping communication open, bringing the team and client together to collaborate on an effective project solution. Additionally, Randy has worked within municipal organizations, and he brings this perspective to each project, understanding the needs and expectations of clients. All his combined experience instills an ability to look at projects from all angles and bring experts together to develop dialogue, finding resolutions to even the most complex of problems.

Evan Tromble, PhD, PE
Water and Wastewater Master Planning and Hydraulic Modeling

Education
Ph.D., Civil Engineering – Water Resources

BS, Civil Engineering

Registration / Certifications
Professional Engineer
AR, 18112

Evan Tromble has 20 years of experience and is Garver's Water Practice Area Teams Manager, leading teams specializing in water resources, hydraulic modeling, master planning, utility management services, program management, and project implementation. As a leader in hydraulic modeling and master planning for Garver, he oversees hydraulic modeling, alternatives evaluations, and master planning efforts for water supply, conveyance, water distribution, and wastewater collection systems. Through open communication, Evan works with technical staff and clients to gather all necessary information to identify the best alternatives. He focuses on understanding the system as a whole, including identification and analysis of all potential operating conditions both current and future, so he can identify key elements impacting system performance. Through this in-depth system understanding, he develops optimized concepts for improvements that address system challenges while limiting the potential for stranded capital and negative unintended consequences.

Maureen Carlin, PhD
Infrastructure Practice

Education
PhD, Civil, Environmental & Sustainable Engineering

MBA

BS, Architectural Engineering & Civil Engineering

Over the course of Maureen's career, she has been fortunate to expand her experience across a wide array of project types, sizes, and regions, both locally and internationally. From this experience, she has built an extensive knowledge of horizontal directional drilling (HDD) and micro tunneling techniques and applications. Maureen evaluates a variety of techniques for each project by considering location, depth, and pipe size to determine the best installation method. She also leverages her industry connections to find answers to the most complex of project challenges so that her clients receive the right solution for their project.

Greg Knight, CEng
Wastewater Practice Leader

Education
Btec Professional Diploma, Water Treatment Management

MS, Environmental Engineering

BS, Physics

Registration / Certifications
Chartered Engineer 604414

Greg has dedicated his career to becoming a wastewater and biosolids treatment specialist and supporting operators with the troubleshooting and commissioning of their treatment plants. Having previously served as a plant manager for a large drinking water facility, he gained an in-depth understanding on the operational and environmental concerns and budget/maintenance challenges associated with water facilities. He carries that perspective into his design roles to develop solutions that are practical and meet the goals and needs of operators. Greg also specializes in advanced treatment methods, such as nutrient removal processes, advanced digestion, thermal hydrolysis, and biogas upgrading.

Ronnie Graves
Operations

Registration / Certifications
Class A Water Operator OK, 2128

Class B Laboratory OK, 2128

Class A Wastewater Treatment Operator OK, 2128

Ronnie's 55 years of experience spans a variety of roles from plant WTP operator to superintendent. His work involved the day to day responsibility of overseeing the plant's operations and staff. He enforced health and safety to create a reliable work environment for operators. Additionally, Ronnie has provided a range of complex supervisory, administrative, and technical work for water and wastewater treatment plants that includes the responsibility of regulatory compliance and maintenance of records. Ronnie's thorough and extensive knowledge of plant operations means he understands the needs of the operators and the daily challenges they face. He knows how to streamline operations and improve efficiency and quality to deliver a more effective operations approach.

Jeff Sober, PE, BCEE

Biosolids

Education
MS, Civil Engineering (Environmental)

BS, Civil Engineering (Environmental)

Registration / Certifications
Professional Engineer AR, 14115

Board Certified Environmental Engineer, 20-20012

Jeff has spent 24 years working on water and wastewater master plans, process designs, condition assessments, solids digestion/handling, and plant operations. His experience includes managing 25 WWTP improvement and expansion projects ranging in size from 0.2 MGD up to 405 MGD. Jeff approaches projects by identifying innovative, time-saving solutions to reduce project costs, successfully reducing scope and cost on over a dozen improvement projects. Having held a role as WWTP operator, Jeff has a thorough understanding of operator needs and challenges. He coordinates directly with the client to see that their project vision is delivered effectively.

Clay Tidwell, CFS, CRAS

Cybersecurity

Licenses
Certified Cybersecurity Fundamentals Specialist

Certified Cybersecurity Risk Assessment Specialist

Clay is the Instrumentation and Controls Team Leader in Garver's Water Design Center with over 9 years of experience in the water and wastewater industry. His experience as a former operator, systems integrator contractor, and as a consultant have afforded him unique perspectives and expertise in developing and executing sophisticated control system designs. Additionally, Clay's background with facility physical security systems and performance of cybersecurity assessments for several municipal water systems has provided him the experience to develop robust SCADA network designs with modern cybersecurity needs in mind.

AVIATION

Kyle Bennett, PE
Project Manager

Kyle Bennett is a project manager on the Aviation team with 19 years of combined experience providing aviation and geotechnical engineering, pavement design, construction materials testing, and project inspection services. His experience includes a diverse portfolio of projects comprised of airfields, highways, bridges, industrial complexes, parking structures, and large-scale commercial developments. His primary responsibilities currently include project coordination, developing plans and specifications, client services, and construction management. Areas of design expertise include pavement design, pavement rehabilitation, materials selection, and evaluation/mitigation of geotechnical considerations.

Education
MS, Civil Engineering, Geotechnical Emphasis

BS, Civil Engineering

Registration / Certifications
Professional Engineer
AR, 14025

Chris Maestri, PE
Team Leader

Chris Maestri serves as the team leader for Garver's Northwest Arkansas Aviation Team and has eight years of experience in design, construction, and project management. His responsibilities include airport design, project management, construction management, client coordination, FAA and state agency coordination, and construction document production. He has worked with several airport throughout the state of Arkansas. His project experience includes construction of runways, taxiways, aprons, hangars, parking lots, and access roads.

Education
BS, Civil Engineering

Registration / Certifications
Professional Engineer
AR, 20075

Adam White, PE
Principal in Charge

Adam White is a senior project manager on Garver's Aviation Team and serves as as Aviation's Operations Manager. He has 17 years of experience specializing in design, evaluation, and maintenance of airfield pavements. Adam's responsibilities include airport design, project management, construction management, airport master planning, coordination with commercial service and general aviation clients, coordination with the FAA, and writing specifications. His project experience includes construction of runways, taxiways, aprons, hangars, perimeter fencing, parking lots, access roads, ARFF stations, and terminals. Adam has participated in the development of four greenfield airports. He also specializes in pavement rehabilitation and has inspected over 10 million square feet of airport pavement.

Education
BS, Civil Engineering

Registration / Certifications
Professional Engineer
AR, 15425

Glenn Boles
Quality Control

Education
BS, Architectural Engineering

Glenn Boles is an Aviation Quality Manager on Garver's Aviation Team with over 35 years of experience contributing to the safety, development, and improvement of airports. Before joining Garver in 2025, Glenn dedicated 33 years to the Federal Aviation Administration, including 11 years as Manager of the Arkansas/Oklahoma Airports District Office (ADO). He has demonstrated knowledge of FAA airspace, design standards and airport programs, and ability to achieve results from his previous experience with the Federal Aviation Administration. Glenn's responsibilities include assisting in administering Garver's Total Quality Management Team by reviewing project management plans, evaluating quality control (QC) reviewer assignments, assisting in QC reviews, and performing QC audits.

Chase Allison, PE
Airfield Design

Education
BS, Civil Engineering

Registration / Certifications
Professional Engineer, AR, 21939

Chase Allison is a project manager on Garver's Northwest Arkansas Aviation Team with over six years of experience in design and project management. Although his background is in commercial land and site development engineering, in his time with Garver, he has worked on taxiway and taxilane extensions, apron reconstruction, and hangar design projects for general aviation and commercial service airports. His responsibilities include airport design, project management, construction management, client coordination, and construction document production.

John Rostas, AAE, CM
Aviation Planning

Education
MBA

BS, Business Administration

Registration / Certifications
Accredited Airport Executive

Licensed Pilot

John serves as a senior aviation planner for Garver's Aviation Team with 10 years of experience in airport planning and development. He has extensive experience as a planning consultant where he developed Airport Master Plans, Airport Layout Plans, environmental assessments, feasibility studies, and capital improvement plans. Prior to joining Garver, John served as Planning Manager for Birmingham Airport Authority where he managed the airport Capital Improvement Plan and oversaw development of the airport's cargo facility study and land use redevelopment plan. This experience enables John to understand the planning process from an Owner's perspective. John is a Certified Member of the American Association of Airport Executives and is a licensed pilot.

Ryan Mountain, PWS
Environmental

Education
BS, Fisheries & Wildlife Management

Registration / Certifications
Professional Wetland Scientist

Ryan Mountain is our environmental special studies manager and senior environmental scientist with 23 years of environmental and project management experience. Primary responsibilities include managing special environmental studies provided to Garver's aviation, transportation, industrial, federal, development, construction, and water business lines. This includes authoring and co-authoring NEPA documents, agency coordination, threatened and endangered species survey coordination, Phase I environmental site assessments, Section 404 permitting, wetland delineations, detailed wetland and stream mitigation planning and specifications, biological evaluations and habitat assessments, and preparing spill prevention and stormwater pollution prevention plans. He has previous experience in fish rearing, distribution, spawning, identification, and aging.

Joe Kaminski, PE, FPE
Hangar Construction

Education
BS, Mechanical Engineering

Registration / Certifications
Professional Engineer, AR, 16917

NCEES Licensed Fire Protection Engineer

Ryan Mountain is our environmental special studies manager and senior environmental scientist with 23 years of environmental and project management experience. Primary responsibilities include managing special environmental studies provided to Garver's aviation, transportation, industrial, federal, development, construction, and water business lines. This includes authoring and co-authoring NEPA documents, agency coordination, threatened and endangered species survey coordination, Phase I environmental site assessments, Section 404 permitting, wetland delineations, detailed wetland and stream mitigation planning and specifications, biological evaluations and habitat assessments, and preparing spill prevention and stormwater pollution prevention plans. He has previous experience in fish rearing, distribution, spawning, identification, and aging.

FIELD SERVICES

Seth Yancey, PE

Field Services Team Leader

Seth is a project manager with 20 years of experience. As part of the Field Services Team, Seth reviews projects for constructability, coordinates with field staff, and interprets plans and specifications for each project. He also works directly with Owners, Design Teams, Contractors, and Inspectors so projects are constructed within specifications. Seth also has seven years of bridge design experience, which includes designing and detailing vehicular and pedestrian bridges, retaining walls, drainage improvements, stormwater layout, and bridge layouts for highway interchanges and roadway intersections, as well as coordinating and reviewing NEPA environmental processes and documents.

Education
BS, Civil Engineering

Registration / Certifications
Professional Engineer
AR, 14058
OSHA 10-hour Construction Safety and Health
ACI Concrete Field Testing Technician Grade I, 00093424

Jeff Jones, PS

Right of Way/Surveys

Jeff Jones is a Survey Team Leader with 41 years of surveying experience. His responsibilities include survey data collection and processing data from field to finish, along with the creation of right of way, utility, and construction easement legal descriptions. His experience includes ALTA/ACSM land title, boundary, topographic, cadastral, architectural, aerial photography control, civil pre-design, GPS control, and construction surveys. Jeff also possesses legal and technical knowledge in regard to creating topographic survey maps, boundary maps, and descriptions for acquisition documents related to roadway and utility improvements as well as field evidence and procedures, records research, analysis of deeds, title reports, right of way, easements, and utilities.

Registration / Certifications
Professional Surveyor
AR, 1615

OSHA 10-hour Construction Safety and Health

Mark Schwartz, CPM

Scheduling and Project Controls

Mark Schwartz is a program controls manager and has 42 years of project control and financial analysis experience. Mark is responsible for working with teams to establish project controls specifications, schedules, and cost-loaded schedules. He establishes program and project reporting based on schedule and cost performance of contractors and claims support. Mark has experience maintaining project controls, scheduling, cost structure, work process improvement, and contract auditing. He has experience designing new technologies, developing project management tools and techniques, and managing financial infrastructures. Mark also has experience in risk management establishing risk registers, mitigation plans, and risk scoring.

Education
BS, Accounting

Registration / Certifications
Certified Project Manager

David Tag, PE

Construction Services

Education
BS, Civil Engineering

Registration / Certifications
Professional Engineer AR, 20160

OSHA 30-hour Construction Safety and Health

David Tag is a resident engineer on Garver's Field Services Team with 27 years of experience, including 4 years in inspection and 23 years in construction project management. He oversees projects, reviews contractor proposals, and maintains constructability and compliance with specifications. David coordinates with field staff, design teams, owners, and contractors, and he has managed over 100 highway and roadway projects in Missouri and Arkansas. His expertise spans traffic control, SWPPP, grading, paving, bridges, retaining walls, roundabouts, interchanges, signals, lighting, and utilities.

Joshua Waite, SI

Right of Way/Surveys

Education
Associate of Applied Science

Registration / Certifications
Surveyor Intern AR, 745

OSHA 10-Hour Construction Safety and Health

Joshua Waite is a project surveyor with 10 years of experience. His responsibilities include managing field crews, implementing new software and equipment, and performing boundary, topographic, and ALTA surveys. He has a working knowledge of various equipment, such as scanners, drones, total stations, levels, and GPS field equipment. Joshua performs data processing using Carlson and Trimble processors. After processing, he utilizes Trimble, Virtual Surveyor, Pix4D, Carlson, AutoCAD, Civil3D, as well as OpenRoads and GeoPak with MicroStation, to create various deliverables, depending on project requirements. Additionally, Joshua compiles and reviews right of way acquisition drawings for ARDOT.

APPENDIX B.

Project Experience

GARVER

TRANSPORTATION

College Avenue Corridor Plan and Design
Fayetteville, Arkansas

Garver provided project programming for improvements to College Avenue between North Street and Township Road and School Avenue between MLK Jr. Boulevard and Cato Springs Road. We also provided LiDAR surveying, traffic studies, and design/construction plans for the North Street to Township Street section. Improvements consist primarily of corridor improvements associated with all modes of transportation, access control, traffic signal upgrades, and streetscapes.

Rupple Road
Fayetteville, Arkansas

Garver provided environmental, surveying, and design services to relocate Rupple Road from Mount Comfort Road to Starry Night Drive. Improvements include a new four-lane bridge over Hamestring Creek and a divided four-lane parkway typical section with an adjoining 12-foot multi-use trail. Water and sewer improvements included approximately 1,500 linear feet of 10-inch gravity sewer and 2,000 linear feet of 12-inch water line. The design included boring under Hamestring Creek, maintaining a sensitive area.

Nelson Hackett Boulevard Improvements
Fayetteville, Arkansas

Garver performed a traffic study to evaluate the improvements along Nelson Hackett Boulevard from Martin Luther King, Jr. Boulevard to Mountain Street. The improvements for Nelson Hackett Boulevard, which included new signals at South Street, a road diet along Nelson Hackett Boulevard, and improvements to the intersection at College Avenue/Rock Street, were analyzed for this study. The intersection at College Avenue/Rock Street was realigned in the build conditions thus creating two intersections. Both intersections were converted to stop-controlled on the minor approaches. The improvements for the intersection at College Avenue/Rock Street improved the performance of the intersection when compared to no-build conditions.

Fulbright Expressway Ramp Improvements

Fayetteville, Arkansas

Garver provided design and construction phases services for the Fulbright Expressway Ramp and Shiloh Drive Improvements project. The scope of services included surveying, roadway and intersection design, preparation of property acquisition documents, bidding, and construction inspection and administration for the improvements to the Fulbright Expressway Access Ramps on Shiloh Drive and improvements to the intersection of Shiloh Drive and Steele Boulevard. Improvements consisted primarily of intersection reconfiguration, intersection signalization, turn lane additions by notch, widen, and overlay, and on- and off-ramp widening. The roadway pavement within the project limits was evaluated and rehabilitated through milling, overlaying, installation of paving fabric, and full-depth pavement replacement in areas with significant deterioration.

Plainview Avenue Extension

Fayetteville, Arkansas

The scope of services includes surveying, design, water and sewer relocations and adjustments, preparation of property acquisition documents, and bidding services for the extension of N. Plainview Avenue from East Longview Street to East Appleby Road. Improvements will consist primarily of the widening of approximately 600 feet of existing roadway with sidewalks, the extension of N. Plainview Avenue approximately 2,000 feet through the Fiesta Square Shopping Center parking lot to E. Appleby Road, installation of a roundabout at the intersection of the existing Fiesta Square entrance with the new roadway, and improvements to the Fiesta Square Entrance/E. Rolling Hills Drive intersection with College Avenue. This project will also include signal design at Rolling Hills Drive at College Avenue.

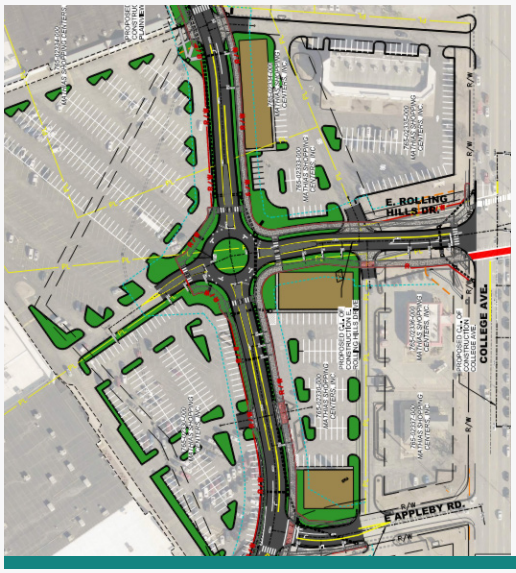

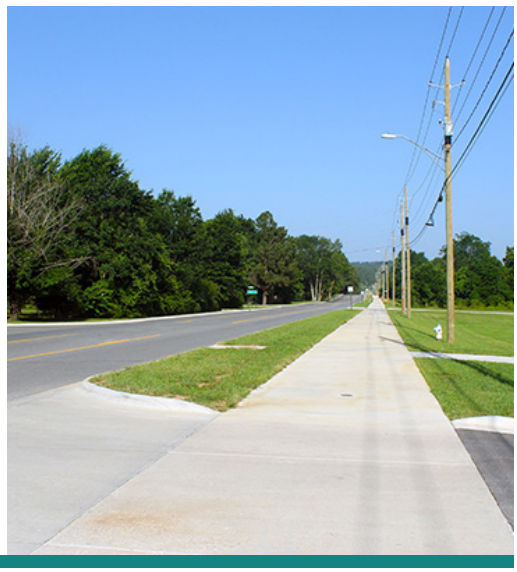

Cato Springs Road

Fayetteville, Arkansas

Garver performed traffic studies, design and property surveys, conceptual design, and final design services to improve Cato Springs Road from School Avenue to Razorback Road. The street was reconstructed and widened, including curb and gutter and drainage improvements. The typical section is two lanes (with three lanes at appropriate intersections) with curb and gutter and sidewalks on both sides with variable green space.

Mount Comfort Road
Fayetteville, Arkansas

Garver provided engineering services to study and design improvements to widen Mount Comfort Road from I-49 to Rupple Road, approximately 8,000 linear feet; relocate and replace Shiloh Drive with new street construction approximately 2,600 linear feet; and widen the ARDOT ramp approximately 600 linear feet. Improvements also included new traffic control signals at four intersections, off-site drainage improvements, and extensive water and sanitary sewer relocations.

I-49 Widening and Interchange
Fayetteville, Arkansas

Garver provided engineering services to widen approximately 2.5 miles of I-49 from four lanes to six lanes from Porter Road through the Highway 112/71B interchange. The bridge types include 365-foot and 300-foot three-span continuous composite plate girder main lane bridges and a 512-foot three-span continuous composite plate girder ramp bridge.

Frisco Multi-Use Trail
Fayetteville, Arkansas

Garver provided surveying, design, property acquisition documents, bidding, and construction services for the trail. Improvements included extending the trail from Martin Luther King, Jr. Boulevard to Walker Park and constructing a 120-foot tunnel, two prefabricated bridges, and a pedestrian hybrid beacon crossing. The tunnel under the five-lane arterial consisted of 120 feet of a 12-foot-wide by 10-foot tall prefabricated box culvert complete with drainage, lighting, and retaining walls on all approaches.

Cato Springs Trail
Fayetteville, Arkansas

Garver provided surveying, environmental, design, and bidding services as well as ARDOT permits to improve the Cato Springs Trail, a pedestrian/bicycle trail. Improvements included extending the trail approximately 2.3 miles from Town Branch Trail to the Fayetteville Regional Park with lighting; crossings under existing bridge structures at I-49, Highway 265, A&M Railroad, and Cato Springs Road; and new bridges over Cato Springs Branch and Fulbright Expressway main lanes.

Town Branch Trail
Fayetteville, Arkansas

Garver provided design and partial bidding services to improve the Town Branch Trail. Improvements included constructing a new pedestrian bridge, upgrading a prefabricated bridge, and designing the trail under the Highway 71B (School Avenue) Bridge over the Town Branch Creek. Design also included hydraulic modeling for all structures and acquisition of a permit for ARDOT.

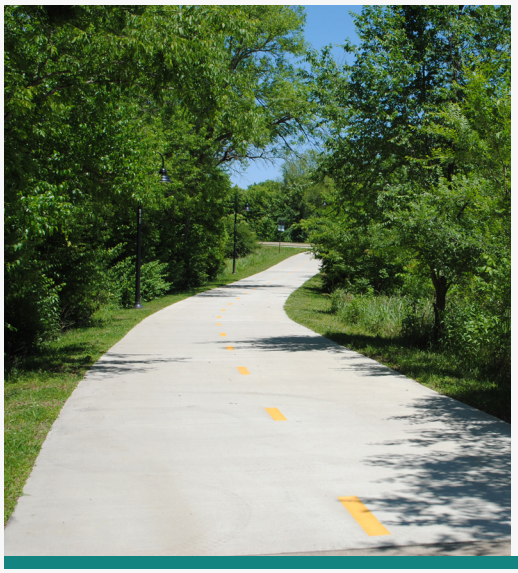

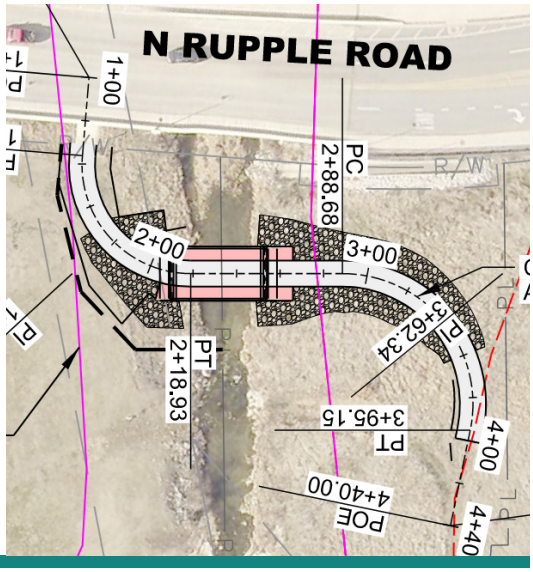

Hamestring Bridge
Fayetteville, Arkansas

Garver provided surveying, design, drainage studies, environmental services, bidding services, and construction support services for the Hamestring Creek Pedestrian Crossing. HEC-RAS analysis was performed to certify a “no-rise” condition of the Hamestring Creek floodplain. This required various bridge/culvert configurations to determine the most hydraulic efficient and cost-effective structure. Improvements consisted primarily of the installation of a pre-cast three-sided pedestrian culvert located to the east of the Rupple Road bridge.

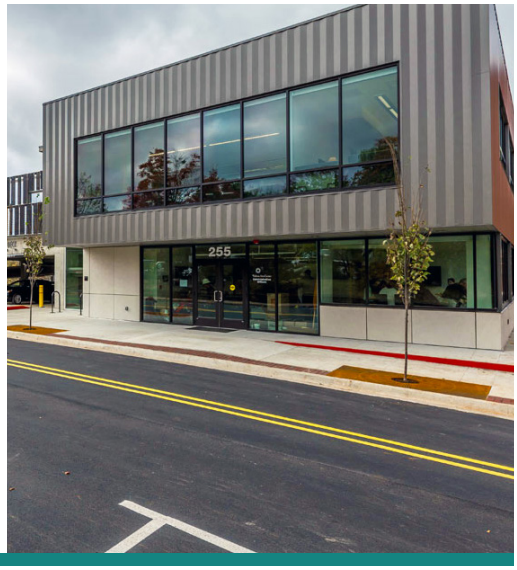

Spring Street Parking Garage

Fayetteville, Arkansas

Garver provided design services for a four-level, 236-space, 102,551-square-foot vehicle parking garage in the City's downtown area/entertainment district on the northwest corner of N. School Avenue and W. Spring Street, adjacent to and southeast of the Walton Arts Center. The new parking facility includes two new buildings: a parking garage and a three-story office building.

Meadow Street Parking Deck

Fayetteville, Arkansas

Garver completed a structural evaluation and condition assessment to determine the scope and cost of the necessary repairs. Under a subsequent contract, the City hired Garver to provide design, bidding, and construction phase services to rehabilitate the Meadow Street Parking Garage, including roof top drainage repairs and ramp repairs.

Bentonville Master Street Plan

Bentonville, Arkansas

Garver prepared an updated Master Street Plan for the City of Bentonville. The goal of this study was to create a comprehensive street network plan for all modes of transportation that works in conjunction with the current City plans. We prepared a detailed plan for developing infrastructure and recommended improvements in order of priority, including cost estimates. Project responsibilities also included updating the current street standard specifications and details, developing a local transit system plan, conducting a parking analysis, and conducting public involvement meetings.

Kessler Mountain Regional Park

Fayetteville, Arkansas

Garver provided engineering services for a new regional park and sports complex. The new park covers approximately 200 acres and includes soccer fields, baseball fields, playground, parking, on-site wastewater treatment facilities, maintenance facility, passive and active recreation areas, paved and natural surface hiking trails, and road and utility infrastructure.

Gulley Park Sound Wall

Fayetteville, Arkansas

Garver provided design and details for a retaining/sound wall on the north side of the proposed tennis/pickleball courts to be included in improvements to Gulley Park. Improvements outside of the retaining/sound wall will be completed by the City of Fayetteville. This project is part of a larger project that includes parking lot expansion, playground improvements, and several upgrades to park amenities

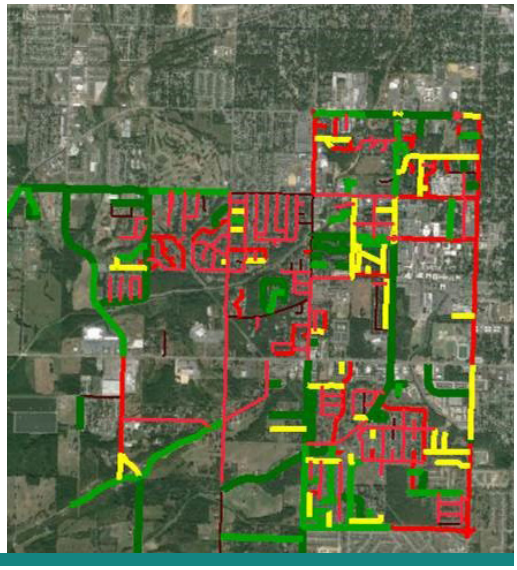

Conway Pavement Management Program

Conway, Arkansas

Garver provided pavement condition inspection services for City streets. Data was collected, evaluated, and analyzed. Maintenance recommendations and budgets were developed for the City Engineering Department along with interactive budget planning tools and GIS compatible condition and planning information.

City of Rogers Future Land Use Plan

Rogers, Arkansas

The City of Rogers is one of the fastest growing metro areas in the country and developing rapidly. Garver worked closely with city staff to complete a comprehensive update to the Future Land Use Plan and Map. Intensive site visits to evaluate ground conditions, and demographic information was used to guide the land use categories. Public involvement included multiple community meetings and events, an interactive map, public survey, and communication with other entities involved with the community.

COMPREHENSIVE GROWTH PLAN
INFORM
ROGERS
WHERE AUTHENTICITY LIVES

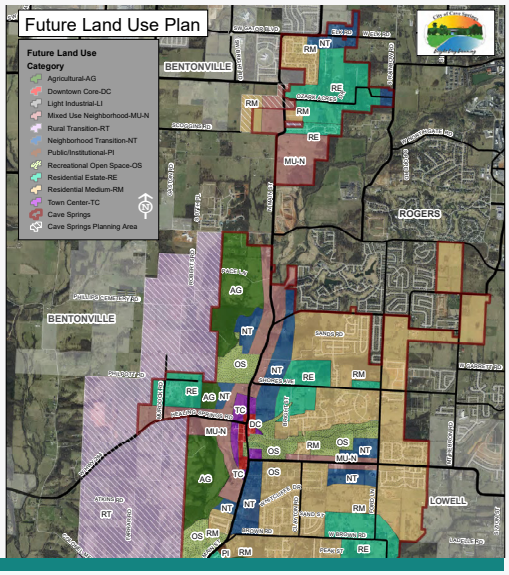

Vision Plan and On-Call Planning Services

Cave Springs, Arkansas

Garver completed a comprehensive plan for the City of Cave Springs, which included a review of the historical and demographic conditions in the City, creation of goals and objectives, and detailed information for each land use category and the future land use map. We completely facilitated the process that included public input sessions, an interactive online survey, and multiple meetings with the City and stakeholders. Other services provided to the City include development review, updating zoning and development code, and assisting with updates and ongoing maintenance of the City Zoning Map hosted by Northwest Arkansas Regional Planning Commission.

Centerton Downtown Master Plan

Centerton, Arkansas

Garver is partnering with the City of Centerton to develop a Downtown Master Plan that will serve as a blueprint for the City's future growth and identity. This project focuses on creating a connected downtown area that links the Old Town area with the New Town district. Garver is providing urban design, master planning floodplain mitigation strategies, and robust public involvement to make the plan reflect the community's vision.

Springdale Future Land Use Updates and Unified Development Code

Springdale, Arkansas

The City of Springdale has selected Garver to revise and enhance the Future Land Use Plan for the city to reflect the rapid changes and growth in the city. Additionally, Springdale has selected Garver to complete a Unified Development Code for the city. This will include creating the structure of the code as well as updating component of the regulations. Areas that will be updated will include zoning code changes, downtown code clarifications, development regulations, design guidelines, and engineering updates.

SPRINGDALE™
WE'RE MAKING IT HAPPEN

ARDOT On-Call Design Services

Statewide, Arkansas

Since 2002, Garver has provided services for consecutive on-call design contracts. Most task orders have been for signalization projects, which has included more than 150 signalized intersections. In addition, we have completed several task orders to design Safe Routes to School (SRTS) projects. These projects include designing sidewalks and many of the same design aspects that we use on our signal projects, such as flashers on signs, wheelchair ramps, crosswalks, and pedestrian signals.

Monte Ne Road

Rogers, Arkansas

Garver provided design services to develop plans for roadway improvements. The project consisted of 3,500 linear feet of widening from a two-lane section with open drainage ditches to a four-lane section with underground drainage and sidewalk/trail improvements along either side of the roadway.

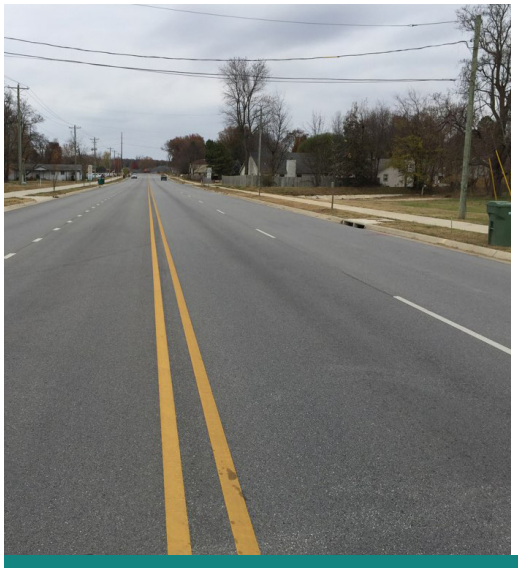

Highway 12 – Walton Boulevard to Greenhouse Road

Bentonville, Arkansas

Garver provided engineering services to study and design improvements for 2.1 miles of Highway 12. Improvements consisted of widening the two-lane highway to a five-lane facility with curb and sidewalks on both sides of the roadway. The project included underground storm drainage systems, traffic signals, and many other incidental systems and facilities. Garver also provided engineering services to relocate water and sewer facilities.

Johnson Road

Springdale, Arkansas

Garver provided engineering services for this multi-phase infrastructure project that consisted of widening 2.11 miles of Johnson Road and widening 0.66 miles of Greathouse Springs Road/ Main Street then extending it 0.57 miles on a new location. The project provided a three-lane or five-lane facility through the project limits with curb and gutter on both sides of the roadway. The project provided an eight-foot multi-use trail on both sides of the street.

Oak Street Corridor Study

Conway, Arkansas

Oak Street is one of Conway's legacy corridors traversing historically disadvantaged portions of the community as well as the City's largest retail areas. The route has significant redevelopment opportunities and dangerous conditions for vehicular and active transportation modes. The Oak Street Corridor Study is an integrated corridor plan that is driven by community engagement. The study addresses land use, development/redevelopment strategies, traffic safety, active transportation, access management, and conceptual transportation design.

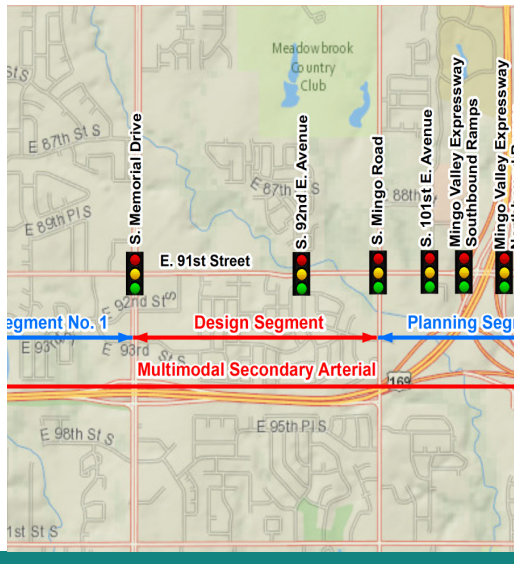

Multimodal Mobility Studies

Tulsa, Oklahoma

Garver performed Multimodal Mobility Studies, including a multimodal level of service analysis using methods outlined in the *Highway Capacity Manual* on multiple streets. These studies included evaluating design alternatives that will provide a multimodal street to accommodate all road users, including vehicles, pedestrians, transit, and cyclists. In addition, traffic and safety analyses were conducted to identify the need for turn lanes, signal timing adjustments, pedestrian crossing locations, bike lanes, sidewalks, and enhancements along each corridor.

City-Wide Traffic Study

Bentonville, Arkansas

Garver conducted a traffic study that included developing short, mid, long, and future projects. The study included evaluating 14 intersections (including traffic data collection, future traffic volume projections, crash analysis, stop control analysis, operational analysis, geometric analysis, and development of planning level costs) and providing recommendations to prioritize projects based on indicators such as functional classification, observations, and level of service.

US 412 Springdale Bypass

Springdale, Arkansas

Garver designed 10 miles of a 20-mile, four-lane, fully controlled access interstate highway. The project includes nine grade separations and two hydraulic crossings. The grade separations were designed using two-span bridges supported by MSE abutments. These two-span bridges are plate girder superstructures with spans ranging from 100 feet to 135 feet. The remaining grade separations and hydraulic structures are prestressed girder structures with spans ranging from 60 feet to 130 feet in length.

Double Springs Road Bridge Rehabilitation

Farmington, Arkansas

Garver provided design, bidding, and construction inspection services to improve the Double Springs Bridge. These improvements consist primarily of bridge rehabilitation to address the deficiencies that were noted in the ARDOT Bridge Inspection Report.

Uptown Overpass

Rogers, Arkansas

Garver provided alternative studies, surveying, design, maintenance of traffic plans, agency coordination, landscape architecture, environmental permitting, water/sewer relocations, bidding, and construction phase services. The project included improving approximately 1,700 feet of collector street roadway from W. Northgate Road to S. Rife Medical Lane, including an approximately 232-foot multi-span bridge over I-49 and a mini-roundabout at the intersection. Improvements also included side paths, raised stamped and colored concrete intersection for pedestrian safety, a bike plaza with bike repair station, water fountain, and bike racks, and bus stop with shelter.

Oak Street Overpass

Rogers, Arkansas

Garver provided alternative studies, surveying, design, maintenance of traffic plans, agency coordination, landscape architecture, environmental permitting, water/sewer relocations, bidding, and construction phase services. The project included road construction for approximately 2,700 feet of Oak Street, featuring a two-lane road section with a 10-foot side path, a 226-foot multi-span bridge allowing for access across I-49, and three intersections utilizing two (two-lane) roundabouts and one mini roundabout. The mini-roundabout utilized stamped and colored concrete flower patterns and in-pavement LED lighting for aesthetics and safety considerations.

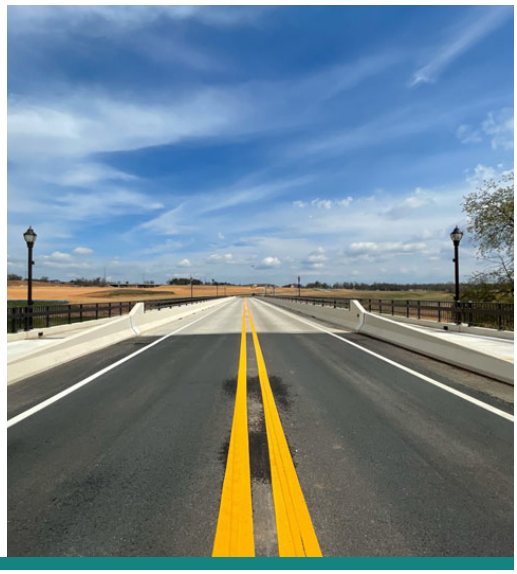

J.B. Hunt Drive

Rogers, Arkansas

Garver provided design, surveying, bidding, and construction inspection services to construct approximately 3,100 linear feet of South J.B. Hunt Drive from South 48th Street to Bellview Road. The project included constructing a two-lane roadway with a raised median, bike lanes, sidewalk, trail, and a new 450-foot bridge spanning Blossom Way Creek and the Razorback Greenway trail. Design services included hydraulic modeling and channel improvements to provide a no-rise certificate for Blossom Way Creek with the proposed bridge, as well as the addition of a roundabout at the Bellview Road and South J.B. Hunt Drive intersection.

J Street Interchange

Bentonville, Arkansas

Garver is providing NEPA clearance and documentation, interstate justification, H&H, surveying, roadway and bridge design, property acquisition documents, bidding, and construction services for a new interchange on I-49 and the extension of NE J Street from Tiger Boulevard to I-49 approximately 1.1 miles. The project includes new bridges over Shewmaker Creek and I-49, traffic/pedestrian signalization, sidewalks, drainage with stormwater BMPs, and lighting.

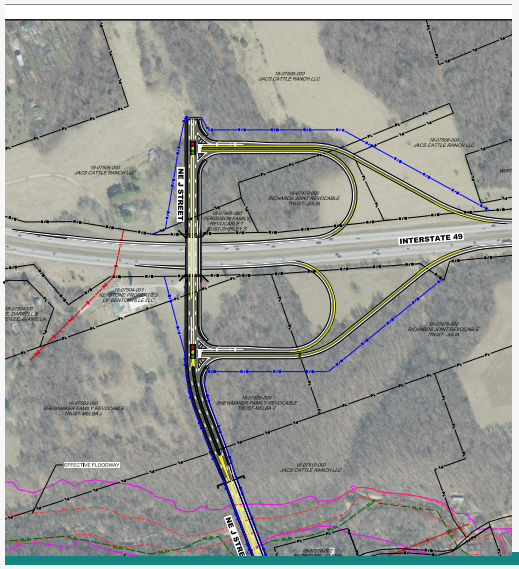

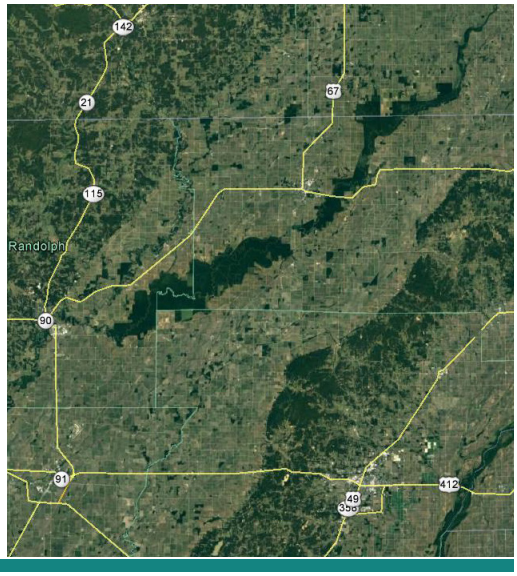

I-57 EIS

Multiple Counties, Arkansas

Garver provided an Environmental Impact Statement (EIS) for Highway 67 (future I-57 corridor), including 35 miles of roadway on new location between Walnut Ridge and the Missouri state line. This EIS included a tiered approach starting with corridor selection then an evaluation of a range of alternatives within the corridor, public involvement, stakeholder coordination, detailed analysis of the natural and built environments, impact determinations, and environmental clearance documents.

Northwest Arkansas National Airport
Benton County, Arkansas

Garver completed an Environmental Assessment and recommended a preferred alternative for a new intermodal connector proposed between Highway 612 (Springdale Northern Bypass) and the airport. This project involved critical threatened and endangered habitat associated with numerous Karst features. Other important project studies included residential and business relocations, sensitive noise receptors, historic or archeology resources, wetlands, streams, floodplains, hazardous materials, protected mitigation areas, and public involvement.

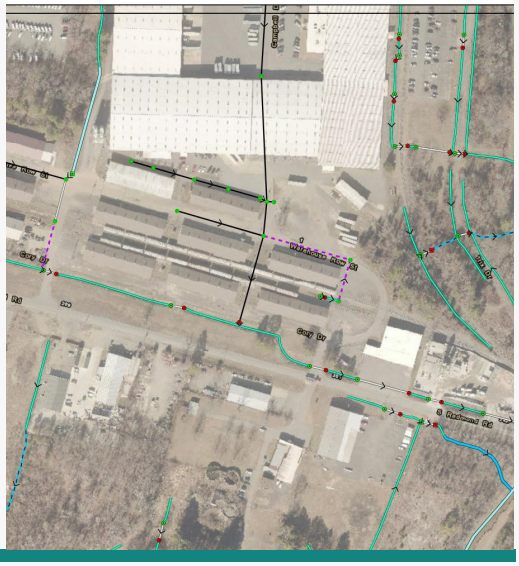

Jacksonville GIS Mapping
Jacksonville, Arkansas

Garver digitally mapped the entire City's stormwater system network in less than four months. The completed first phase collected almost 14,000 above and below ground features using aerial imagery, LiDAR, and other geospatial products. By digitally mapping the stormwater system prior to having "boots on the ground," the client saved about 30% of the cost of a field only collection, and Garver gains the ability to accurately scope and fee for the second phase of the field work; a win-win.

Mapping and GIS Support
Gentry, Arkansas

Garver successfully developed a cloud-based GIS map of Gentry's wastewater collection system using Esri's ArcGIS Online. The project included digitizing system assets, creating a detailed asset database, and implementing a GIS data model. Garver trained City staff on using the system and GNSS equipment for field data collection. The resulting GIS supports Gentry's wastewater master planning and ongoing asset management, with Garver continuing to provide administrative and technical support.

GIS Deployment and On-Call

Washington County, Arkansas

Garver modernized Washington Water Authority (WWA) GIS and field data systems by deploying Esri's Water Distribution tools and customizing data for migration. Field workflows were improved with new tech and training, enabling efficient data collection across 418 square miles. Garver developed GIS tools to analyze water demand and support future planning and launched pressure prediction tools, streamlined permitting, and managed ArcGIS Online. This significantly enhanced WWA's GIS capabilities.

GIS System Design and Migration

Elkins, Arkansas

Garver delivered comprehensive services for the creation of a new cloud-based GIS system for Elkins Water and Wastewater system, establishing a modern geospatial foundation for infrastructure management. Garver's GIS Team delivered field verified utility mapping, custom automated data collection methods for increased efficiency, system integration, and ongoing staff training that enabled long-term data management.

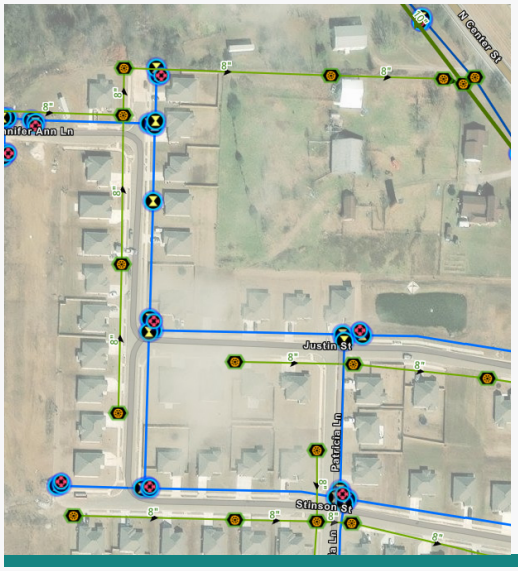

Sedgwick Sports Complex Site Assessment

Sedgwick, Kansas

In October 2022, members of the Sedgwick Recreation Commission met with staff from Garver and a local contractor to discuss a new sports complex on 17.4-acres of city-owned land on the Cwity's east side and requested a feasibility study to determine what was possible on the site and the costs associated with development. They envisioned new baseball fields, a maintenance building, a possible multi-use field, and a long-term space for a future recreation center. Using that input, Garver prepared the feasibility, analyzing the site for utility, access, zoning, flood, and land use impacts.

Naftzger Park
Wichita, Kansas

Garver provided surveying, civil engineering design, and local coordination for the redevelopment of the park. The park features a large public lawn, performance stage, LED screen, space for food trucks, dog run, outdoor seating, fountain, and landscaping. The lawn was split between natural grass and more durable artificial turf where more activities will be programmed. Underneath the lawn is a large underground detention basin, which serves as relief for an overtaxed storm sewer system in the adjacent Douglas Avenue and collects a significant portion of on-site runoff. Garver was subsequently hired for two additional improvement projects. Due to the success of the park, the natural grass portion of the event lawn became difficult to maintain. Garver's landscape architects designed improvements that included replacement of grass with artificial turf, a concealed based for the City's annual holiday tree, and game tables. A 2025 project added a new public restroom to the park.

The Point
Huntsville, Alabama

Garver provided engineering services for the Point, a planned 12,000-square-foot urban park in the middle of the MidCity District. The Point is located on a triangular island in the middle of MidCity Drive, which can be closed to traffic on weekend, creating a one-block walkable event space. From the north, a small seating node flanked by a sinuous custom wood structure built around a fire pit welcomes visitors. Landscape lighting will create a space that glows and becomes a nighttime centerpiece of MidCity District. The park opened in fall 2025.

Southwest Trail
Multiple Counties, Arkansas

Garver is providing complete environmental, survey, and design services to support a recreational trail from Hot Springs to Little Rock that is dedicated for pedestrians/cyclists. The Southwest Trail will provide a safe route for pedestrians and cyclists to enjoy outdoor recreation while simultaneously providing an economic stimulus to central Arkansas.

Dean's Trail
Springdale, Arkansas

Garver provided a preliminary study, surveying, environmental, permitting, design, cost estimating, and bidding services. Improvements include 1) extending a new 12-foot-wide shared use trail from Shiloh Trail to Oriole Street, 2) constructing a 12-foot-wide concrete trail from Oriole Street to the west and southward through a tunnel under Hwy. 412 west of the Thrush Street Fire Station, ending on the south side of Hwy. 412, 3) constructing a 12-foot-wide concrete trail from the end of Phase 2 southward along the unnamed tributary of Clear Creek to Don Tyson Parkway, and 4) designing a 12-foot-wide concrete trail from Don Tyson Parkway to a pedestrian bridge over Hwy. 265, connecting to the Fayetteville Trail System at Lake Fayetteville.

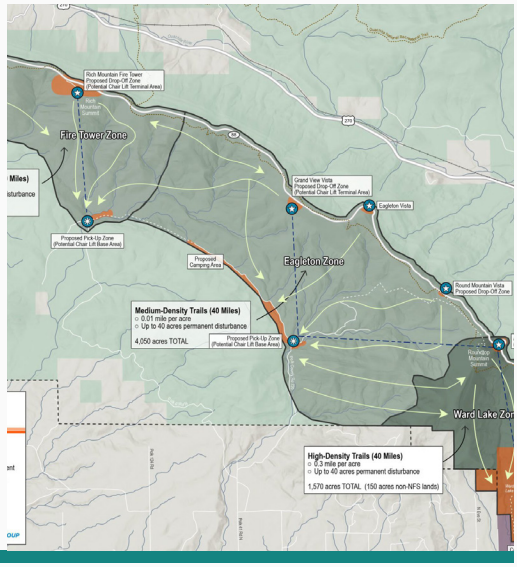

Mena Park Bike Trail
Mena, Arkansas

Mena Park Bike is being built through phased development, eventually connecting the City of Mena, Arkansas, to Queen Wilhelmina State Park. Once complete, this downhill bike park will fill a monumental slot of being the largest lift-served mountain bike park in the world built from scratch solely for mountain biking. Garver is performing survey, environmental services, H&H modeling, on-site wastewater plant design, water line improvements, electrical, and site civil design services.

Shillcott Bayou Pedestrian Bridge
North Little Rock, Arkansas

Garver provided surveying, conceptual planning, environmental handling and documentation, final bridge design, bidding, and construction inspection services to replace the bridge. The bridge has a clear width of 14 feet and approximately 16 feet out to out, which makes it suitable for both pedestrians and cyclists. The new bridge has an approximately 6.5-inch concrete slab supported by prefabricated steel truss spans with a total length of approximately 145 feet.

Lake Atalanta Bridge Replacement

Rogers, Arkansas

Garver provided design services to repair and improve structures that were damaged at Lake Atalanta Park due to recent flooding. The design services included hydraulic modeling and scour analysis, bio-engineered stream bank stabilization, and structural analysis of existing and proposed structures.

Missouri Creek Drainage Study

Fayetteville, Arkansas

Garver provided surveying, hydrologic/hydraulic studies, design, and bidding services for improvements within the Missouri Creek watershed basin. Improvements included installing an underground drainage system along Stanton Avenue between N. Elizabeth Avenue and Rolling Hills Drive with a potential settling basin near Rolling Hills Drive, along Loxley Avenue between Cortland Street and Harold Street, and capacity improvements to Missouri Creek between Rolling Hills Drive and Stubblefield Road, including a potential box culvert crossing replacement on Eton Street.

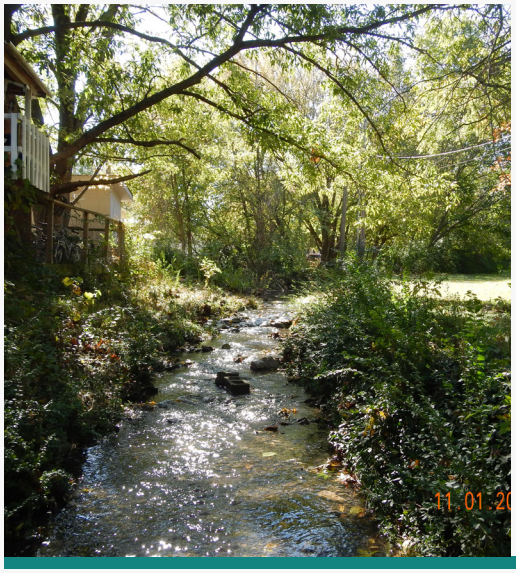

Coler Creek Drainage Study

Bentonville, Arkansas

Garver conducted a drainage study of Coler Creek. The study included a detailed hydrologic analysis using HEC-HMS for current and future conditions. It also included a detailed hydraulic analysis using HEC-RAS. A Letter of Map Revision (LOMR) was submitted to the Federal Emergency Management Agency (FEMA) on behalf of the City to account for changes to flood mapping due to construction of a bike trail with pedestrian bridges throughout a two-mile reach of creek. Detailed results and mapping were provided to the City along with coordination with FEMA for the LOMR application.

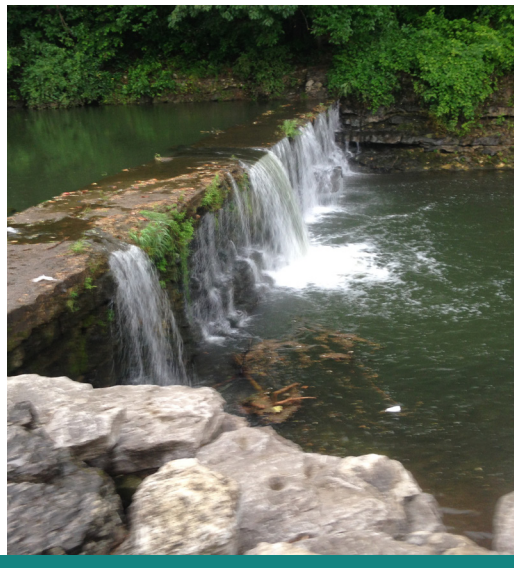

Downtown Flood Study

Siloam Springs, Arkansas

Garver provided 1D floodplain modeling and mapping at Sager Creek. Under this work order, the City completed a flood study and submitted a FEMA LOMR for approximately 4,200 feet of Sager Creek in the downtown area from a point approximately 800 feet upstream of the Benton Street Crossing to a point approximately 350 feet upstream of the Main Street Crossing.

WATER & WASTEWATER

Noland WWTP Master Plan and Upgrades

Fayetteville, Arkansas

Garver provided master planning, conceptual, and is currently conducting 30% design services to upgrade the existing Noland Wastewater Treatment Plant (WWTP). We developed hydraulic and process models, conducted staff interviews, performed technical evaluations, and drafted preliminary 3D renderings. The Phase I improvements design project is focused on critical infrastructure upgrades needed within the next five years to mitigate aging equipment failures and maintain operational resiliency. Later phases (5–10 years and 10+ years) will address long-term capacity expansion and additional process enhancements as flows and loadings increase.

We also provided a Phase I 10% design deliverable to maintain project momentum, refine the prioritization approach, develop construction sequencing options, and identify the recommended design criteria to provide effective, custom solutions.

Massard WWTP Master Plan

Fort Smith, Arkansas

The City of Fort Smith selected Garver to develop a master plan for the Massard Wastewater Treatment Plant (WWTP). Garver performed evaluations of the existing treatment process to identify which systems should be reused, rehabilitated or replaced. Following the evaluation, the Garver team develop a phased implementation plan for the WWTP process and evaluated cost effective ways to expand the plant while maintaining the existing infrastructure. Plant improvements included the design of a new biological treatment process to address future flow and permit limits.

The master plan included a detailed hydraulic survey and modeling to identify hydraulic constraints in the system and detailed process modeling to evaluate treatment alternatives and determine which will be the most cost effective. Also included was the development of a phased approach to implement the alternatives based on triggers for the plant. Garver assisted with evaluations of potential funding sources and opportunities, including the Water Infrastructure Finance and Innovation Act (WIFIA) loan program administered by the Environmental Protection Agency.

Bentonville Town Branch Sewer Improvements

Bentonville, Arkansas

Garver is designing critical sewer infrastructure improvements for the Town Branch Sewer Basin, which serves Bentonville's historic downtown, the new Walmart campus, and surrounding neighborhoods. The project addresses significant capacity limitations caused by major interceptors experiencing surcharge conditions and overflows. These improvements are critical to support urban growth and maintain compliance with regulatory requirements. Garver is designing sewer improvements for all six identified CIP projects within Town Branch Sewer Basin under a single program, providing hydraulic modeling, validation of the City's proposed CIP projects for the basin, and detailed design. The work includes upsizing more than 11,000 feet of gravity mains and associated infrastructure throughout the sewer basin to provide capacity for near-term development and future growth based on the recently finalized 2050 land use plan. Bentonville Water Utilities selected Garver as their most trusted consultant to manage accelerated design and construction timelines while maintaining a high level of quality, allowing the City to keep pace with development and growth demands within the basin.

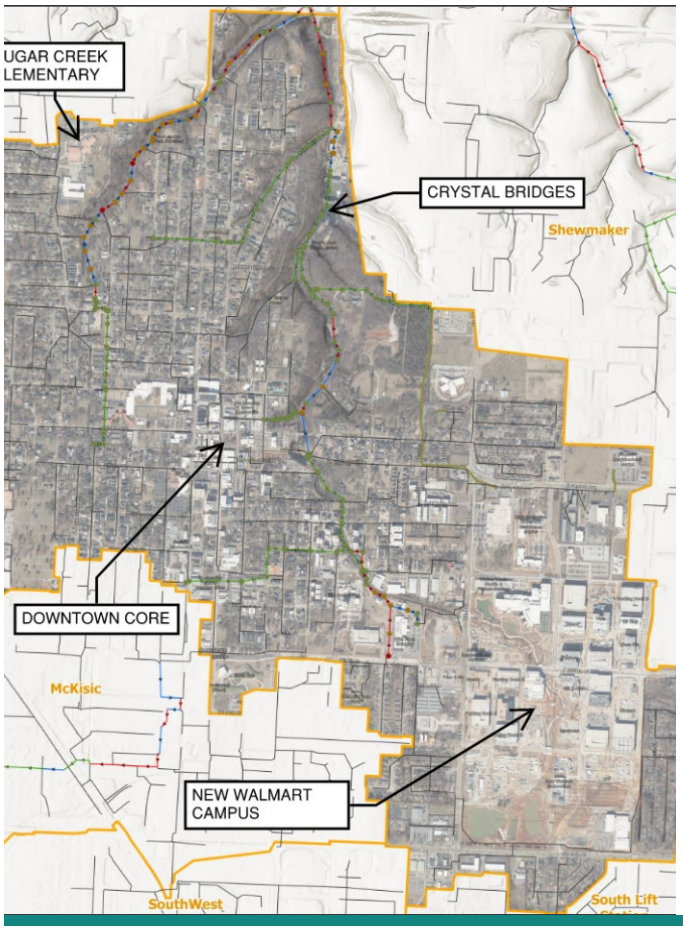

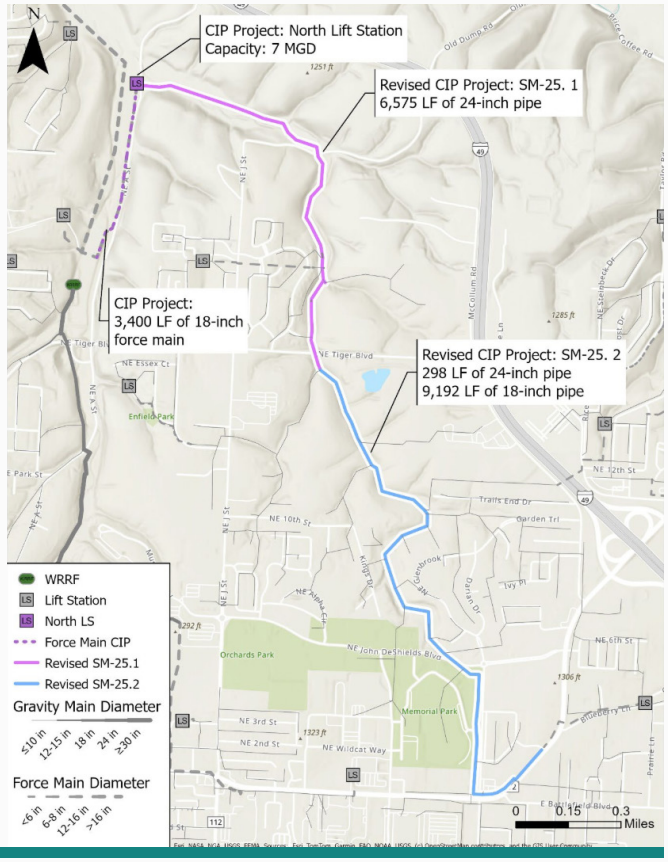

Shewmaker Interceptor Improvements

Bentonville, Arkansas

Garver is providing comprehensive services to Bentonville Water Utilities (BWU) for the Shewmaker Sewer Basin Interceptor Improvements, including hydraulic modeling, validation of the City's proposed capital improvement plan projects for the basin, and detailed design of the improvements. The basin improvements were split into two phases in order to accelerate relief from additional capacity. Phase 1 includes approximately 7,500 linear feet of upsized gravity sewer to eliminate current constraints and significantly increase capacity within the lower section of the interceptor. A second phase will address 9,000 linear feet of upstream sewer improvements as well as the design and construction of a new North Lift Station and force main to the Bentonville Water Resource Recovery Facility. BWU selected Garver as their most trusted consultant to manage accelerated design and construction timelines while maintaining a high level of quality, allowing the City to keep pace with development and growth demands within the basin.

Bentonville Comprehensive Performance Evaluation

Bentonville, Arkansas

Garver performed a comprehensive audit and evaluated ways to improve operations at the Bentonville WWTP, comply with future potential permit requirements, and accommodate increasing flows.

Garver's evaluation included the WWTP's liquid and solids trains. We identified alternatives to replace equipment, improve process control and performance, and reduce power costs. The audit also focused on energy efficiency, providing a variety of ways to reduce current costs through operational efficiency and lessen future capital improvements by maximizing the plant's infrastructure.

Garver recommended that the identified capital improvements be separated into three phases, which starts with the first phase of optimizing the BNR process, along with implementing automated controls and monitoring. The phases following will be designed to provide long-range solutions to meet phosphorus limits, first at 5 MGD then followed by a 12 MGD build-out scenario.

This project was designed by our Fayetteville Water Design Center.

Conway Tupelo Bayou WWTP and Pump Stations

Conway, Arkansas

Garver delivered the Tupelo Bayou WWTP, which replaced two existing plants to serve the rapidly expanding Central Arkansas metropolitan area for the next 20 years. The new greenfield WWTP was designed to process an average daily flow of 16 MGD and utilizes a conventional activated sludge process to achieve the discharge limit. The collection system improvements included 22,352 feet of 36-inch diameter force main; 17,000 feet of 48-inch gravity line; 1,500 feet of 24-inch force main; two new pump stations; and upgrades to one of the WWTPs.

The existing Stone Dam Creek WWTP was taken out of service upon the completion of the Tupelo Bayou WWTP. This station along with the East German Pump Station was replaced by the new Central Pump Station which serves to pump flows to a gravity line flowing westward toward the Tupelo Bayou WWTP. Ultimately, this project included diverting flows from the old WWTPs to the new WWTP.

This project was designed by our Fayetteville Water Design Center.

TRA MCRWS WWTP Improvements

Midlothian, Texas

Garver provided master planning, design, and construction services for the expansion of the existing 3 MGD treatment plant to 9 MGD, with long-term planning to treat sewer-shed build-out. We developed a plant hydraulic model, plant water system hydraulic model, and plant process model to identify water system needs and plant system deficiencies and problem areas.

Technical evaluations were completed for the plant's electrical service, building use, influent pump station wet well, hydraulic capacity, solids management, future expansion layout, and solids loading. Using information and insights from these evaluations, our team developed a comprehensive capital improvements plan. Each project in the CIP will have phasing, OPCC, O&M budget impacts, and flexibility criteria with a detailed timeline.

This project was designed by our Fayetteville Water Design Center.

Celina Water and Wastewater Master Plan and Modeling

Celina, Texas

Garver conducted a City-wide water and wastewater modeling and master planning effort. The project evaluated current water and sewer needs, as well as projected needs for the full build-out population of 343,267. The wastewater collection system model was developed based on a combination of GIS, record drawings, and survey data, with field survey being required on portions of the City that lacked reliable elevation data to assess the system hydraulics. The buildout evaluations were used to identify a roadmap for system improvements.

Due to the rapid growth projected, hydraulic modeling evaluations were performed on an annual basis to determine project priorities.

This project was designed by our Fayetteville Water Design Center.

NACA WWTP Master Plan & Expansion

Bentonville, Arkansas

NACA hired Garver to develop the conceptual design for the first expansion of the WWTP, which helped maintain adequate treatment capacity to meet the needs of Northwest Arkansas's growing population. The planned capital improvements included modification, refurbishment, and expansion of existing facilities to increase liquid treatment process capacity average day flow rate from 3.6 to 7.2 MGD. To project future loading rates, Garver analyzed and tested daily flow composite samples at strategic points in the process stream, like the raw influent, oxidation ditch effluent, secondary clarifier effluent, polishing filter effluent, and final effluent. Garver developed and calibrated a process model of the existing facilities' process data to help with this evaluation, verified the existing plant biological treatment, identified any biological volume necessary for the planned capacity expansion, and determined the capability of existing processes to meet future nutrient limits.

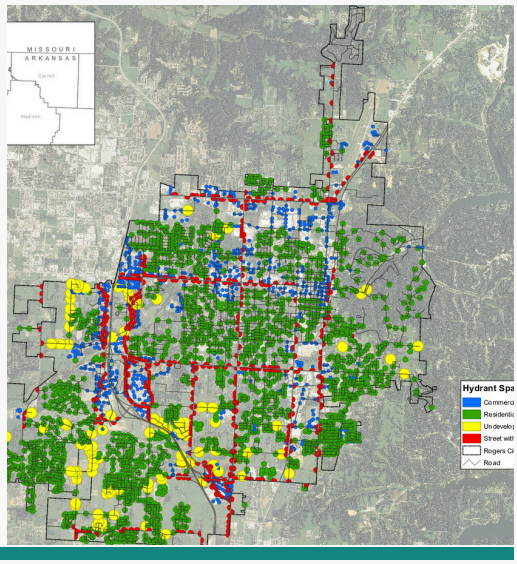

RWU Comprehensive Water Master Plan

Rogers, Arkansas

Garver evaluated improvements needed to accommodate continued growth within the existing service boundary and expansions for the 5-year and 35-year planning horizons. Utilizing ArcGIS based software, Garver also developed a hydraulic model to evaluate the water distribution system for the Rogers Water Utilities (RWU).

Siloam Springs WWTP

Siloam Springs, Arkansas

Garver partnered with Siloam Springs to develop, design, and implement enhanced nutrient removal processes at the WWTP. The project's first two phases are now online and improve the liquid process treatment train through biological nutrient removal (BNR) and chemical nutrient removal (CNR). The new bioreactor is producing a discharge phosphorus of less than 0.4 mg/L and nitrate less than 10 mg/L. Additionally, membrane treatment is planned as a third phase improvement to meet an extremely stringent phosphorus limit of 0.037 mg/L.

SWU WWTF Phase 1 & 2 Improvements

Springdale, Arkansas

The Springdale Wastewater Treatment Facility is undergoing a multi-phase improvement plan. Phase I included construction of several new facilities to meet an increased targeted capacity and treatment criteria that was outlined in a peak flow study completed by Garver in 2019. The improvements include increasing the design and peak flow pumping capacity, two new 150-foot diameter final clarifiers, rehabilitation of the existing four final clarifiers, new mixed liquor splitter box, RAS/WAS pumping upgrades, site improvements, electrical improvements, and SCADA improvements. Garver's work will also include surveys (including 3D scanning), geotechnical coordination, permitting assistance, bidding (including pre-qualifying contractors), construction phase services, and warranty services. Garver is currently designing Phase 2 of the WWTF upgrades, which include a new disk filter facility, upgrades to site electrical capacity, and new yard piping.

Porter Road Water/Sewer

Fayetteville, Arkansas

Garver provided design and full-time construction inspection services for approximately 3,000 linear feet of water lines (up to 12-inch) and facilities, including bored steel encasement and approximately 5,000 linear feet of gravity sewer lines (mostly 18-inch) and facilities, including bored steel encasement to accommodate improvements at the Interchange of I-49, Highway 112, and Highway 71B.

SWU Water and Sewer Master Plan

Springdale, Arkansas

Garver created a comprehensive water and sewer master plan for Springdale Water Utilities (SWU). Based upon planning data obtained from the Northwest Arkansas Regional Planning Commission, the service population for SWU was estimated at approximately 110,000 in 2020 (5-year planning horizon) and approximately 169,000 in 2040 (25-year planning horizon). The total water and wastewater CIP for the 25-year planning horizon exceeded $236 million.

Sulphur Springs WWTP Master Plan and Improvements

Sulphur Springs, Texas

Among several plant-wide improvements, Garver provided design and planning services for a new headworks facility including fine screening and grit removal at the Sulphur Springs WWTP. The design took into account multiple design considerations, including varying flow from both gravity and pumped influent, unknown peak demands, and re-utilization of existing infrastructure.

Garver provided a detailed technology evaluation of screen and grit removal technologies, and ultimately recommended fine screens with vortex grit removal. The facility included automated flow split to primary clarification, as well as a new primary splitter box with an automated weir gate to automatically utilize the plant's peak flow basins for peak flow shaving. The design also incorporated challenging hydraulics within the existing processes.

Kaw Lake Water Supply

Enid, Oklahoma

Garver served as program manager and lead designer for a multi-phased, $315 million program to deliver raw water from the Kaw Reservoir to the City of Enid. The program provided the City of Enid with a new 50-year sustainable water supply to supplement its depleted groundwater supply. The project included a new intake structure in the Kaw Reservoir and approximately 70 miles of raw water conveyance, including 36-inch piping and booster pumps along the alignment. Garver's services also included providing environmental, design, and communication support services.

Okmulgee Raw Water Line

Okmulgee, Oklahoma

Garver completed a project to evaluate, recommend, and design methods to rehabilitate the City of Okmulgee's raw water conveyance system. To increase raw water conveyance capacity in an economical manner, Garver used a low-impact, trenchless method that cost $2.1 million less than an estimated open-trench technique. The solution lay with a 90-year-old concrete pipe and a trenchless technology known as sliplining.

TRA Central Regional Wastewater System Master Plan

Dallas, Texas

Garver performed master planning and modeling on the 189 MGD facility. The Garver Team evaluated process changes, which included analyzing peracetic acid and low pressure UV for alternative disinfection, evaluating the potential for reuse of the effluent, evaluating harvesting and recovery of phosphorus through the biosolids side stream, and evaluation of post aerobic digestion for nitrogen removal.

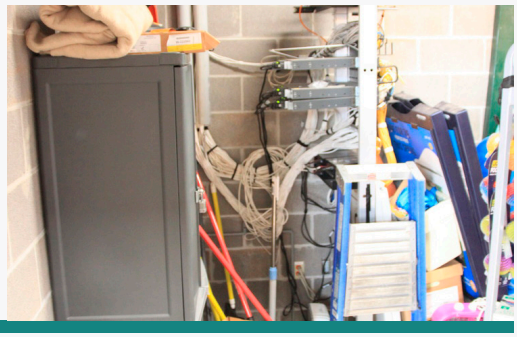

Kessler Mountain to Cato Springs Road Water Main

Fayetteville, Arkansas

Garver provided design, bidding, and construction phase services for 6,300 linear feet of 18-inch water line connecting two six million gallon water storage tanks to the distribution system near Cato Springs Road (Highway 265).

Baxter and Mount Sequoyah Tanks

Fayetteville, Arkansas

Garver provided design, bidding, and construction support services to repair and paint the five million gallon Baxter ground storage tank and 250 thousand gallon Mount Sequoyah elevated tanks.

Greenland Sewer Rehabilitation

Fayetteville, Arkansas

Garver provided design services for approximately 11,000 linear feet of removal and replacement, pipe bursting, upsizing up to an 18-inch pipe size, and point repairs to existing gravity sewer and manholes as defined by a previous sanitary sewer evaluation study.

Lake Thunderbird Raw Water Conveyance
Norman, Oklahoma

Garver designed approximately 13,000 linear feet of 48-inch raw water line from Lake Thunderbird to the Vernon Campbell WTP. These conveyance improvements were designed to increase conveyance capacity to meet the short-term water demand. Norman's population growth has created increased water demands on the Norman WTP and the 44-year-old pipeline.

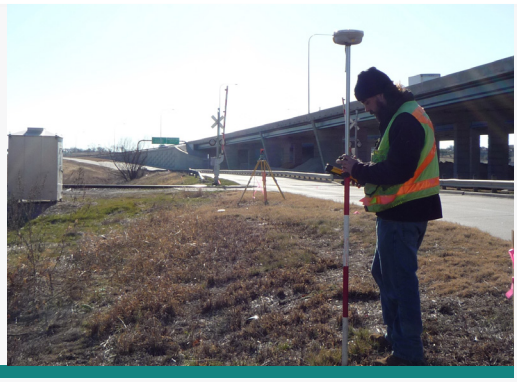

Stewart Creek North Interceptor
Frisco, Texas

Garver has provided conceptual and final designs for over 8,700 linear feet of new 18-inch to 48-inch FRP sewer interceptor in Phase 1 and over 10,000 linear feet of 30-inch to 48-inch FRP interceptor in Phase 2 of this project. The interceptor alignment parallels an existing 24-inch to 27-inch line, as well as provides service to a new area.

Pump Station Evaluation/Design
Hot Springs, Arkansas, Arkansas

Garver assessed wastewater pump stations in Hot Springs to identify improvements for increasing station reliability and capacity. Over 200 pump stations were included in this project under three separate contracts.

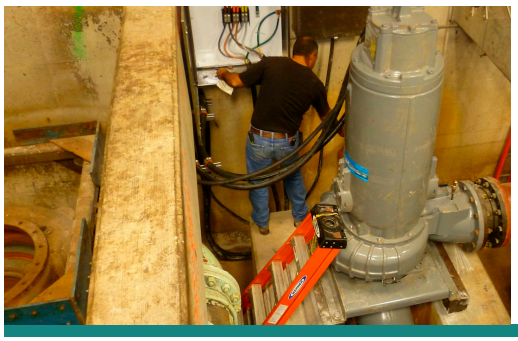

EL-3 and EL-5 Gravity Sewer Lines
Fayetteville, Arkansas

Garver provided design, bidding, and construction inspection services for approximately three miles of up to 42-inch gravity sewer line primarily buried up to 17 feet of cover but with approximately 400 linear feet of elevated emplacements.

AVIATION

Drake Field Airport Runway Pavement and Lighting Rehabilitation

Fayetteville, Arkansas

Garver provided design, bidding, and construction support services to rehabilitate aging Runway 16-34 pavements and upgrade the airfields electrical and infield drainage systems. At a total cost of $6.7M, this project is the most comprehensive development completed at Drake Field in over 30 years. The project encompassed a broad scope of work including mill and overlay of runway and connector taxiway pavement, runway grooving, airfield markings, replacing deteriorated drainage infrastructure, new runway edge lighting, new airfield signage, upgraded Air Traffic Control Tower controls, new electrical vault, and new backup generator.

Project design was completed on an accelerated schedule to take advantage of additional discretionary federal funding that became available in 2021. By securing these additional funds, the project costs were able to be 100 percent federally funded, with less than $2.00 in costs attributed to the City for AIP ineligible expenses. Construction within the Runway Safety Area was completed during a single 16-day runway closure phase to minimize impacts to airport operations.

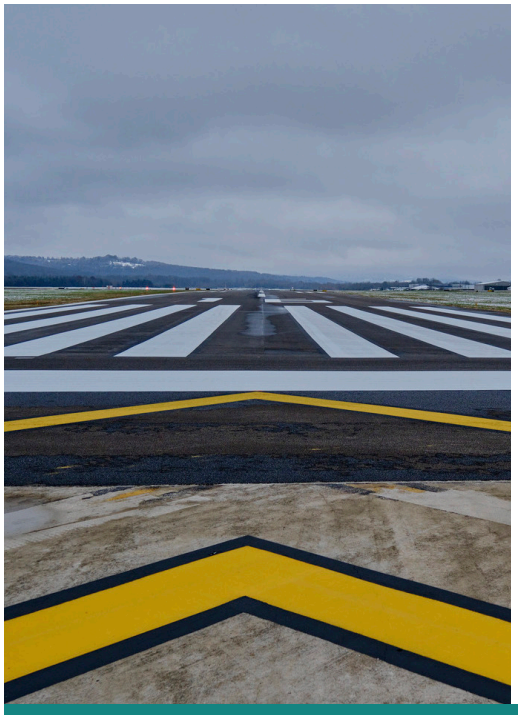

Drake Field Airport Taxiway Lighting Rehabilitation

Fayetteville, Arkansas

Garver provided design services to rehabilitate the existing taxiway edge lighting system for all taxiways on the airfield. Rehabilitation included clearing conduit of existing conductors, installing new conductors in existing conduit, and replacing all existing incandescent taxiway edge light fixtures with new LED fixtures and transformers on existing base cans.

Drake Field Airport Taxiway B Widening

Fayetteville, Arkansas

Garver provided design services to widen and rehabilitate Taxiway B to accommodate charter traffic, including the Airbus A321 and Boeing 757. As part of the widening project, the existing Taxiway B pavement was also analyzed through a Pavement Condition Index (PCI) survey to determine the appropriate rehabilitation method. After performing the PCI survey, it was determined that the existing pavement was in need of an overlay.

Drake Field Airport
Apron Rehabilitation
Fayetteville, Arkansas

Garver provided design, bidding, and construction support services to rehabilitate Fayetteville-Drake Field's 25,000 square yard concrete terminal apron. The terminal apron had multiple widespread distresses, including spalling, cracking, corner breaks, and ponding. To acquire a special $500,000 grant from the Arkansas Department of Aeronautics, Garver completed design in under 45 days.

Drake Field Airport
Airport Master Plan
Fayetteville, Arkansas

Garver is working with the airport to develop an Airport Master Plan with the primary goals of 1) identifying the actual developable envelope on and near airport property, and 2) identifying the highest and best use of the limited developable land. To accomplish these goals, the master plan includes a comprehensive hydrological analysis to accurately delineate wetlands on and near the airport. This will establish what the actual developable limits will be for airport development. Concurrently, the master plan also involves engaging heavily with local and regional stakeholders to identify what the existing and potential uses of the airport could include. This includes a thorough vetting of the based aircraft waitlist. In doing so, we will be able to optimize the limited developable space to make sure that the development will support based aircraft most able to generate sustainable revenue and balance community goals.

Drake Field Airport
Wildlife Fencing Rehabilitation
Fayetteville, Arkansas

Deficiencies with the existing wildlife fencing were identified during the FAA's 2022 Part 139 inspection. Existing barbed wire fencing south of Runway 34 was not compliant with current FAA standards and its poor condition provided little barrier to local wildlife. Existing chain link fencing to the north was overgrown and in need of localized repair to restore its condition.

Garver led this project to replace approximately 3,500 linear feet of existing barbed wire wildlife fence southeast of Runway 16-24 with 10-foot-tall wildlife exclusion fence and performed localized repairs to approximately 3,400 linear feet of existing chain link fence. The project also included clearing and grubbing of existing fence lines to be retained.

Bentonville Municipal Airport
Corporate Hangar Construction

Bentonville, Arkansas

Garver provided surveys, site civil design, and construction phase services for a privately-funded, 19,740-square-foot hangar on the east side of the airfield. Constant coordination with the architect and developer was critical in providing a site that met all the developer's needs. Due to the building's large size and limited space for development, existing water and sewer lines had to be relocated both inside and outside the airfield fence. An underground detention basin was also installed, as the existing drainage infrastructure could not accommodate the additional hangar area without adding detention capacity. Garver led the project through the City's large scale development review process to ultimately receive approval for construction.

Bentonville Municipal Airport
Southeast Taxiway B Extension - Phase II

Bentonville, Arkansas

Garver provided surveying, geotechnical, design, bidding, and grant closeout services associated with a 600-linear foot parallel taxiway extension to Taxiway B at Bentonville Municipal Airport. This extension provided direction access to the recently extended Runway 36 end, providing a safer alternative to the back-taxi that aircraft currently had to perform to access the full runway length.

Springdale Municipal Airport
East Hangar Construction

Springdale, Arkansas

Garver provided design and construction services for the construction of a new taxiway, apron, and a 100-foot by 100-foot hangar facility on the northwest side of Taxiway B at Springdale Municipal Airport. As part of the design effort for the project, Garver led coordination efforts with multiple entities including the city's Large Scale Development Process, state and local funding agencies, the airport board, and other client representatives. Garver assisted the City in procuring two separate Arkansas Department of Aeronautics grants for all site work associated with the project. In addition, Garver assisted the Airport in procuring a Construction Manager for construction of the 10,000 square foot hangar.

Springdale Municipal Airport
East Taxiway Extension

Springdale, Arkansas

Garver provided survey, engineering, bidding, and construction phase services for the extension of the existing east parallel taxiway at ASG. This project included: relocation of an 18" sewer main, extension of a quadruple barrel 8' x 10' box culvert, engineering to mitigate flooding impacts, relocation of the 18 end PAPI system, coordination with FAA to perform a flight check for the 18 PAPIs and the FAA owned glideslope system, as well as 1300 linear feet of paving, relocation of the Runway 18 threshold, lighting and signage upgrades, and environmental documentation.

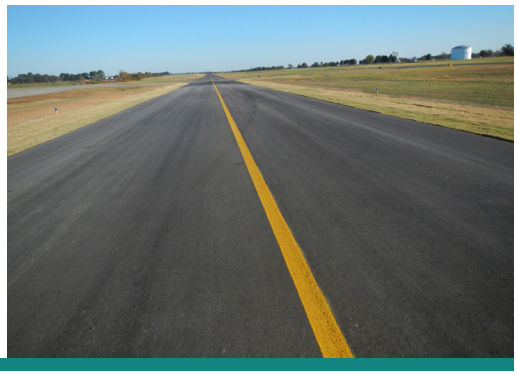

Siloam Springs Municipal Airport Parallel Taxiway Rehabilitation

Siloam Springs, Arkansas

Garver provided survey, design, bidding, and construction phase services for the reconstruction of approximately 1,600 feet of parallel taxiway. Reconstruction consisted of new full-depth pavement and lighting infrastructure.

Rogers Executive Airport Taxiway Construction and Taxilane Rehabilitation

Rogers, Arkansas

Rogers Executive Airport was in need of hangar development space. Garver provided survey, design, bidding, and construction phase services to reconstruct an existing taxiway and build a new taxilane for access to previously undeveloped green space. In the early design stages of the new taxilane, we worked closely with the Airport to determine a site layout that would provide optimum development potential adjacent to the new taxilane. A critical element of the project was the design and construction of approximately 2,050 feet of water, 1,550 feet of sanitary sewer, and 1,500 feet of gas main lines to accommodate future hangar development. Additionally, approximately 50,000 cubic yards of earthwork had to be moved to adjust the site elevation by as much as eight feet in some locations. Garver also designed the relocation of an existing detention pond that was not sized or located in an efficient manner to serve future development. The project included reconstruction of the existing taxiway and the removal of an outdated T-hangar.

Clarksville Municipal Airport Lighting Rehabilitation

Clarksville, Arkansas

Garver designed a complete overhaul of the airport's lighting system. This included designing new LED runway edge lights, LED airfield signage, LED PAPIs, an LED windcone, and a new electrical transclosure for all airfield electrical power equipment.

Boone County Regional Airport Airfield Pavement Rehabilitation

Harrison, Arkansas

Garver provided design, bidding, and construction phase services to rehabilitate the parallel taxiway and apron pavement at Boone County Regional Airport. The project included rehabilitation of approximately 115,000 square yards of taxiway and apron pavement using slurry and fog seal, reconstruction of 800 square yards of asphalt pavement, reconstruction of approximately 150 square yards of concrete pavement, and installation of pavement markings.

FIELD SERVICES

ARDOT On-Call Surveying Services

Statewide, Arkansas

Garver is currently providing on-call topographic, boundary, and construction surveys for the Arkansas Department of Transportation. Garver has been assigned tasks to establish mapping, horizontal control, and vertical control for statewide projects. Garver has also provided control and hydrographic surveys for various projects. In addition, Garver has provided right of way surveys and plans and has completed several right of way projects.

Kaw Lake Water Supply

Enid, Oklahoma

Garver provided control, topographic, hydrographic, boundary, and right of way acquisition documents for the City of Enid's Kaw Lake Reservoir program. The scope of the project involved combining all the types of surveys utilizing every piece of survey equipment in our arsenal, including an eBee fixed-wing drone to perform the aerial topographic surveys for the 70-mile-long corridor.

Lake Norfork Intake Pump Station

Mountain Home, Arkansas

Garver performed bathymetric surveys of the surrounding area on Lake Norfork at the proposed water intake structure located off Cranfield Road, near the Cranfield Park Recreation area. Garver was tasked to conduct a water source intake study for the City of Mountain Home. The City's 50-year-old intake needed to be replaced, and this project included identifying potential sources of water, including wells, riverbank filtration, and another lake intake.

ARDOT Connecting Arkansas Program (CAP)

Statewide, Arkansas

Garver is providing construction engineering and oversight support as well as project controls and program management support for approximately 37 miles and $440 million of construction projects located in Northwest Arkansas. Garver is developing, updating, and reporting on 36 CPM schedules; developing and leading risk workshops; publishing risk memos with recommendation on contingency; implementing project update meetings; reviewing and inputting data into the ReCAP quarterly publication; and working with the budget manager on cost reports.

I-49/Don Tyson Parkway Interchange

Springdale, Arkansas

Garver provided design and construction engineering and inspection services for a new interchange on I-49 and to extend Don Tyson Parkway from 48th Street to 56th Street. The project provides a five-lane facility on Don Tyson Parkway through the project limits, with medians, curb and gutter, and sidewalks on both sides of the roadway.

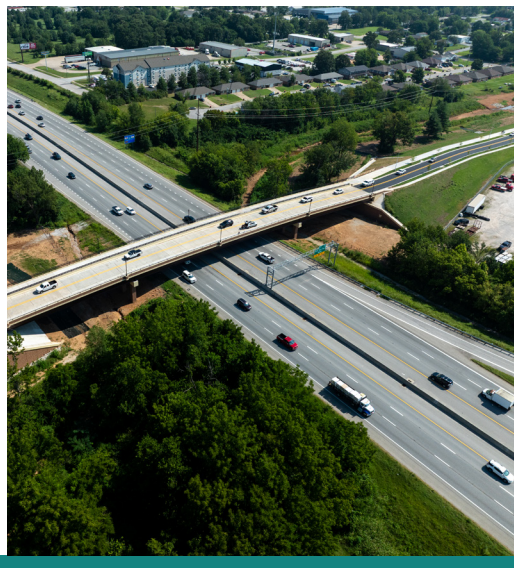

Har-Ber Avenue Extension Phase I and II

Springdale, Arkansas

Garver provided comprehensive construction inspection services for the Har-Ber Avenue and 40th Street coridor improvements. The project spans Har-Ber Avenue from 48th Street to Gutensohn Road and includes the widening of 40th Street, featuring an overpass over Interstate 49. Key components include sidewalks, pavement, bridges (including two steel bridges), utilities, lighting, drainage, traffic signals, and MSE retaining walls. Our responsibilities included oversight of plans and specifications, monthly progress reporting, and submittal reviews to uphold quality and compliance throughout the project lifecycle.

Northwest Arkansas Conservation Authority (NACA) Wastewater Treatment Plant

Bentonville, Arkansas

Garver is currently providing professional engineering services for the NACA Wastewater Treatment Plant improvements, focusing on design and construction services. The project includes surveying and planning for modifications to existing facilities and construction of new infrastructure to increase treatment capacity. Work involves site layout, yard piping, and integration of new process units. Garver also has coordinated geotechnical investigations, prepared construction plans and specifications, and developed sequencing strategies to minimize operational disruptions.

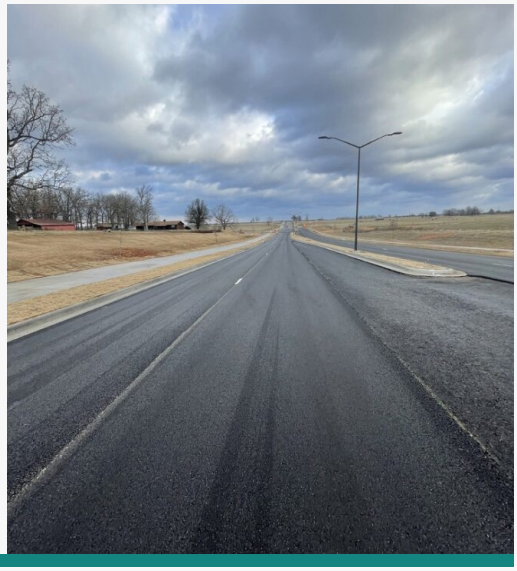

Springdale 64th St Road Improvements

Springdale, Arkansas

As part of the City of Springdale's 2018 Bond Program, Garver is providing construction services for approximately 5,280 LF of four-lane street improvements, including a roundabout at the Apple Road intersection, along with drainage improvements, lighting, landscaping, and other miscellaneous items associated with street construction. Also including approximately 6300 LF of 12" water main construction, 1400 LF of 8" & 12" sewer force main relocation, and other miscellaneous utility construction.

Gene George South Phase I CEI

Springdale, Arkansas

Garver provided CEI services for the improvement of approximately 2,000 linear feet of Gene George Boulevard, extending from Don Tyson Boulevard to 56th Street. The project transformed the existing two-lane roadway into a four-lane corridor, complete with a raised median, sidewalks, and a multi-use trail to support both vehicular and pedestrian traffic. These enhancements were designed to improve traffic flow, safety, and accessibility in a rapidly developing area of the city. In addition to roadway expansion, the project involved several complex infrastructure upgrades, utility improvements, and traffic phase coordination. Responsibilities included daily site observations, documenting work progress, coordinating closely with contractors and city staff to resolve issues in real time, and verifying compliance with federal requirements.

ARDOT CPM Scheduling

Statewide, Arkansas

Garver is providing Critical Path Method (CPM) scheduling support statewide for ARDOT. Services have included conducting time impact analysis (TIA) as well as bid, baseline, and updated schedule support. Along with schedule support, we have provided CPM Special Provision training for all Resident Engineer offices. Garver is also developing Primavera training, which will also be given to every Resident Engineer office.

ARDOT 040901 Highway 22 - Gun Club Road CEI

Sebastian and Crawford Counties, Arkansas

Garver is currently providing construction, engineering, and inspection (CEI) services with CPM Scheduling services for the new I-49 over the Arkansas River Bridge. The project constructs a 3.2 mile long 4-lane section of the Future I-49 from Highway 22 to Gun Club Road. It also includes the completion of the interchange at Highway 22 and construction of a portion of the Gun Club Road interchange. Also included is the construction of two separate bridge structures across the Arkansas River Valley. Garver's role also includes survey control verification, surveys for quality control and quantity computations, monitoring contractor operations, and inspection, sampling, and testing of materials.

APPENDIX C.

Forms

GARVER

SECTION B: Vendor References

The following information is required from all firms so all statements of qualification may be reviewed and properly evaluated:

COMPANY NAME: Garver LLC

NUMBER OF YEARS IN BUSINESS: 106 HOW LONG IN PRESENT LOCATION: 30 years

TOTAL NUMBER OF CURRENT EMPLOYEES: 1,524 FULL TIME 1,470 PART TIME 54

NUMBER OF EMPLOYEES PLANNED FOR THIS CONTRACT: _____ FULL TIME _____ PART TIME ***TBD based on the scope of services required to complete tasks**

PLEASE LIST FOUR (4) REFERENCES THAT YOU HAVE PREVIOUSLY PERFORMED CONTRACT SERVICES FOR WITHIN THE PAST FIVE (5) YEARS (All fields must be completed):

1. City of Rogers
COMPANY NAME

Rogers, AR 72756
CITY, STATE, ZIP

Lance Jobe, PE
CONTACT PERSON

479-621-1186
TELEPHONE

479-631-2767
FAX NUMBER

ljobe@rogersark.org
E-MAIL ADDRESS

2. City of Springdale
COMPANY NAME

Springdale, AR 72764
CITY, STATE, ZIP

Ben Peters, PE
CONTACT PERSON

479-750-8105
TELEPHONE

479-750-8539
FAX NUMBER

bpeters@springdalear.gov
E-MAIL ADDRESS

3. City of Bentonville
COMPANY NAME

Bentonville, AR 72712
CITY, STATE, ZIP

Preston Newbill
CONTACT PERSON

479-271-3140
TELEPHONE

479-271-3137
FAX NUMBER

pnewbill@bentonvillear.com
E-MAIL ADDRESS

4. Springdale Water Utilities
COMPANY NAME

Springdale, AR 72765
CITY, STATE, ZIP

Heath Ward, PE
CONTACT PERSON

479-751-5751
TELEPHONE

479-750-4039
FAX NUMBER

hward@springdalewater.com
E-MAIL ADDRESS

SECTION C: 2026 Annual Statement of Qualifications Summary Form

SUMMARY STATEMENT:

Proposer should provide summary information on this form by checking the areas of expertise based on experience and qualifications. The City will utilize the selection marked by each firm to correspond with the scope of work for each project.

This form MUST be completed and returned for your proposal to be eligible for consideration.

X	Airport	X	Natural Resource/Conservation Planning
X	Architecture		Parks: Urban Forestry Planning
X	Bridges		Parks: Land Dedication Fees Consultant
	Carbon Sequestration Analysis		Parks: Aquatics Consultant Site Utility
X	Civil/Structural Design		Solid Waste Management
	Climate Resilience Analysis	X	Studio Design
X	Construction Administration	X	Storm Water Management
X	Drainage Design, Analysis, & Planning	X	Stormwater Modeling
	Ecosystem Services Analysis	X	Stormwater Design
X	Environmental Analysis, Remediation, & Permitting	X	Stream Restoration
X	Environmental Water Services	X	Structural Design
X	Floodplain Services	X	Surveying
X	GIS Mapping	X	Sustainability Design
	Geotechnical Engineering		Testing Services: Soil/Materials
	Historical Architecture/Structures	X	Traffic Studies
X	Hydrology	X	Utility Asset Inspections
X	Grant Writing Services	X	Value Engineering
X	Impact Fee Studies	X	Wastewater Design
	Independent Fee Estimates	X	Wastewater Management
	Interior Design	X	Wastewater Modeling
X	Landscape Architecture	X	Wastewater SSES
	LEED/Sites Certification	X	Watershed Studies
X	Lighting Design	X	Water/ Sewer Rate Studies
	Master Planning: Arts/Culture	X	Water Audit Services
X	Master Planning: City/Government	X	Water Design
X	Master Planning: Parks	X	Water Management
X	Master Planning: Streets	X	Water Modeling
X	Master Planning: Wastewater	X	Water Quality Monitoring
X	Master Planning: Water	X	Wetlands
X	Mechanical, Electrical, & Plumbing		

X

1. DISCLOSURE INFORMATION

a. Proposer must disclose any possible conflict of interest with the City of Fayetteville, including, but not limited to, any relationship with any City of Fayetteville employee. Proposer response must disclose if a known relationship exists between any principal or employee of your firm and any City of Fayetteville employee or elected City of Fayetteville official.

   i. If, to your knowledge, no relationship exists, this should also be stated in your response. Failure to disclose such a relationship may result in cancellation of a purchase and/or contract as a result of your response. This form must be completed and returned in order for your bid/proposal to be eligible for consideration.

PLEASE CHECK ONE OF THE FOLLOWING TWO OPTIONS, AS IT APPROPRIATELY APPLIES TO YOUR FIRM:

X 1) NO KNOWN RELATIONSHIP EXISTS

_____2) RELATIONSHIP EXISTS (Please explain): _____

_____

_____

b. I certify that; as an officer of this organization, or per the attached letter of authorization, am duly authorized to certify the information provided herein are accurate and true; and my organization shall comply with all State and Federal Equal Opportunity and Non-Discrimination requirements and conditions of employment.

c. Proposer agrees that they have a current, valid registration with the Arkansas Secretary of State at time of RFQ deadline OR be able to provide proof of registration before contract award.

d. Pursuant Arkansas Code Annotated §25-1-503, the Contractor agrees and certifies that they do not currently boycott Israel and will not boycott Israel during any time in which they are entering into, or while in contract, with any public entity as defined in §25-1-503. If at any time during contract the contractor decides to boycott Israel, the contractor must notify the contracted public entity in writing.

e. Pursuant Arkansas Code Annotated §25-1-1002, the Contractor agrees and certifies that they do not currently boycott Energy, Fossil Fuel, Firearms, and Ammunition Industries during any time in which they are entering into, or while in contract, with any public entity as defined in §25-1-1002. If at any time during the contract the contractor decides to boycott Energy, Fossil Fuel, Firearms, and/or Ammunition Industries, the contractor must notify the contracted public entity in writing.

2. PRIMARY CONTACT INFORMATION

At the discretion of the City, one or more firms may be asked for more detailed information before final ranking of the firms, which may also include oral interviews. **NOTE: Each Proposer shall submit to the City a primary contact name, e-mail address, and phone number where the City's Procurement Division can contact for clarification or interview request.**

Name of Firm: Garver, LLC

Name of Primary Contact: Jerry Martin, PE

Title of Primary Contact: Arkansas Water Leader

Phone Number: 479-287-4653

E-Mail Address: JTMartin@GarverUSA.com

3. ACKNOWLEDGEMENT OF ADDENDA

Acknowledge receipt of addenda for this invitation to bid, request for proposal, or request for qualification by signing and dating below. All addendums are hereby made a part of the bid or RFP documents to the same extent as though it were originally included therein. Proposers/Bidders should indicate their receipt of same in the appropriate blank listed herein. Failure to do so may subject Contractor to disqualification.

ADDENDUM NO.	SIGNATURE AND PRINTED NAME	DATE ACKNOWLEDGED
Addendum 1	Jerry Martin, PE	12/08/2025

4. DEBARMENT CERTIFICATION:

a. As an interested party on this project, you are required to provide debarment/suspension certification indicating in compliance with the below Federal Executive Order. Certification can be done by completing and signing this form.

b. Federal Executive Order (E.O.) 12549 "Debarment and Suspension" requires that all contractors receiving individual awards, using federal funds, and all sub-recipients certify that the organization and its principals are not debarred, suspended, proposed for debarment, declared ineligible, or voluntarily excluded by any Federal department or agency from doing business with the Federal Government.

c. Signature certifies that neither you nor your principal is presently debarred, suspended, proposed for debarment, declared ineligible, or voluntarily excluded from participation in this transaction by any federal department or agency.

5. **SIGNATURE SUBMITTAL:**

COMPANY: Garver, LLC

PHYSICAL ADDRESS: 2049 E Joyce Blvd., Suite 105, Fayetteville, AR 72703

MAILING ADDRESS: 2049 E Joyce Blvd., Suite 105, Fayetteville, AR 72703

TAX ID#: 01-0733400 SAM UEI#: ZEHTVZ6KMSK5

ARKANSAS SECRETARY OF STATE FILING # : 100214921

PHONE : 479-287-4653 FAX : _____

E-MAIL : JTMartin@GarverUSA.com

By submitting your response, you certify that you are authorized to represent and bind your company :

SIGNATURE : 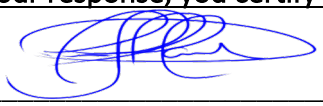

PRINTED NAME : Jerry Martin, PE

TITLE: Arkansas Water Leader DATE: 12/18/2025

END OF SECTION D: SIGNATURE SUBMITTAL

CITY OF
FAYETTEVILLE
ARKANSAS

Garver, LLC

2049 E. Joyce Blvd., Suite 105
Fayetteville, AR 72703

TEL 479-527-9100
FAX 479-527-9101

www.GarverUSA.com

GARVER

1. DISCLOSURE INFORMATION

a. Proposer must disclose any possible conflict of interest with the City of Fayetteville, including, but not limited to, any relationship with any City of Fayetteville employee. Proposer response must disclose if a known relationship exists between any principal or employee of your firm and any City of Fayetteville employee or elected City of Fayetteville official.

   i. If, to your knowledge, no relationship exists, this should also be stated in your response. Failure to disclose such a relationship may result in cancellation of a purchase and/or contract as a result of your response. This form must be completed and returned in order for your bid/proposal to be eligible for consideration.

PLEASE CHECK ONE OF THE FOLLOWING TWO OPTIONS, AS IT APPROPRIATELY APPLIES TO YOUR FIRM:

X 1) NO KNOWN RELATIONSHIP EXISTS

_____2) RELATIONSHIP EXISTS (Please explain): _____

_____

_____

b. I certify that; as an officer of this organization, or per the attached letter of authorization, am duly authorized to certify the information provided herein are accurate and true; and my organization shall comply with all State and Federal Equal Opportunity and Non-Discrimination requirements and conditions of employment.

c. Proposer agrees that they have a current, valid registration with the Arkansas Secretary of State at time of RFQ deadline OR be able to provide proof of registration before contract award.

d. Pursuant Arkansas Code Annotated §25-1-503, the Contractor agrees and certifies that they do not currently boycott Israel and will not boycott Israel during any time in which they are entering into, or while in contract, with any public entity as defined in §25-1-503. If at any time during contract the contractor decides to boycott Israel, the contractor must notify the contracted public entity in writing.

e. Pursuant Arkansas Code Annotated §25-1-1002, the Contractor agrees and certifies that they do not currently boycott Energy, Fossil Fuel, Firearms, and Ammunition Industries during any time in which they are entering into, or while in contract, with any public entity as defined in §25-1-1002. If at any time during the contract the contractor decides to boycott Energy, Fossil Fuel, Firearms, and/or Ammunition Industries, the contractor must notify the contracted public entity in writing.

2. PRIMARY CONTACT INFORMATION

At the discretion of the City, one or more firms may be asked for more detailed information before final ranking of the firms, which may also include oral interviews. **NOTE: Each Proposer shall submit to the City a primary contact name, e-mail address, and phone number where the City's Procurement Division can contact for clarification or interview request.**

Name of Firm: Garver, LLC

Name of Primary Contact: Jerry Martin, PE

Title of Primary Contact: Arkansas Water Leader

Phone Number: 479-287-4653

E-Mail Address: JTMartin@GarverUSA.com

3. ACKNOWLEDGEMENT OF ADDENDA

Acknowledge receipt of addenda for this invitation to bid, request for proposal, or request for qualification by signing and dating below. All addendums are hereby made a part of the bid or RFP documents to the same extent as though it were originally included therein. Proposers/Bidders should indicate their receipt of same in the appropriate blank listed herein. Failure to do so may subject Contractor to disqualification.

ADDENDUM NO.	SIGNATURE AND PRINTED NAME	DATE ACKNOWLEDGED
Addendum 1	Jerry Martin, PE	12/08/2025

4. DEBARMENT CERTIFICATION:

a. As an interested party on this project, you are required to provide debarment/suspension certification indicating in compliance with the below Federal Executive Order. Certification can be done by completing and signing this form.

b. Federal Executive Order (E.O.) 12549 "Debarment and Suspension" requires that all contractors receiving individual awards, using federal funds, and all sub-recipients certify that the organization and its principals are not debarred, suspended, proposed for debarment, declared ineligible, or voluntarily excluded by any Federal department or agency from doing business with the Federal Government.

c. Signature certifies that neither you nor your principal is presently debarred, suspended, proposed for debarment, declared ineligible, or voluntarily excluded from participation in this transaction by any federal department or agency.

5. SIGNATURE SUBMITTAL:

COMPANY: Garver, LLC

PHYSICAL ADDRESS: 2049 E Joyce Blvd., Suite 105, Fayetteville, AR 72703

MAILING ADDRESS: 2049 E Joyce Blvd., Suite 105, Fayetteville, AR 72703

TAX ID#: 01-0733400 SAM UEI#: ZEHTVZ6KMSK5

ARKANSAS SECRETARY OF STATE FILING # : 100214921

PHONE : 479-287-4653 FAX :

E-MAIL : JTMartin@GarverUSA.com

By submitting your response, you certify that you are authorized to represent and bind your company :

SIGNATURE : 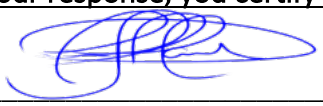

PRINTED NAME : Jerry Martin, PE

TITLE: Arkansas Water Leader DATE: 12/18/2025

END OF SECTION D: SIGNATURE SUBMITTAL

Jerry Martin, PE

CITY OF FAYETTEVILLE ARKANSAS

CITY COUNCIL MEMO
2026-1867

MEETING OF JUNE 16, 2026

TO: Mayor Rawn and City Council

THROUGH: Keith Macedo, Chief of Staff
Chris Brown, Public Works Director
Justin Bland, City Engineer

FROM: Paul Libertini, Staff Engineer

SUBJECT: **Hwy 112/Garland Ave (Poplar St to Drake St) Supplemental Agreement No. 2 to the Agreement of Understanding with the Arkansas Department of Transportation**

RECOMMENDATION:
A Resolution authorizing the Mayor to sign a letter dated August 27, 2025 from the Arkansas State Highway Commission constituting the second supplement to the Agreement of Understanding (AOU) for this project, and to approve a Budget Amendment in the amount of $625,000 to recognize federal-aid funding of $500,000 and the required 20% local match of $125,000.

BACKGROUND:
On January 3, 2017, the City Council approved the City's participation in a revised Partnering Agreement with the Arkansas Department of Transportation (ARDOT) to make needed improvements to Hwy 112 (Resolution 27-17). Upon completion of the improvements to Hwy 112, the City agreed to assume ownership and responsibility of Hwy 112 from Hwy 16 (15th St) to Interstate 49.

On September 19, 2017, the Mayor signed the Agreement of Understanding with ARDOT obligating the City to manage the improvements of Hwy 112 from Poplar Street to Drake Street. The City will be managing project design, right-of-way acquisition, utility relocations, bidding and construction management.

The Mayor signed a letter dated June 10, 2025 from Jared D. Wiley, Director of the Arkansas State Highway Commission constituting a supplement to the Agreement of Understanding (AOU) for this project. The supplement agreed to incorporating $144,000 of Federal-aid Transportation Alternatives Program (TAP) funding awarded to the City into this project to construct a 12-foot side path.

On June 17, 2025, the Northwest Arkansas Regional Planning Commission (NWARPC) awarded the City $500,000 of Federal-aid Surface Transportation Block Grant Program – Attributable (STBGP-A) funds for the construction phase of this project.

DISCUSSION:
The City has received a letter dated August 27, 2025 from Jared D. Wiley, Director of the Arkansas State Highway Commission requesting a modification to the project Agreement of Understanding (AOU) to incorporate the $500,000 of STBGP-A federal funds into this project for the construction phase which requires the Mayor's signature.

BUDGET/STAFF IMPACT:
Initially, the City will make payments to the Contractor and will subsequently submit the required paperwork to ARDOT requesting the 80% reimbursement of the construction payments. The City's 20% matching funds for the roadway improvements will be paid from the Streets Project 2022 Bonds Fund. The Federal-aid portion is $500,000 and the City's match is $125,000. The budget amendment is recognizing the grant revenue, appropriating the City match, and consolidating the budgeted funds to one project.

ATTACHMENTS: 3. Staff Review Form, 4. Budget Amendment, 5. Hwy 112 SA#2 AOU Letter, 6. Hwy 112 SA#2 AOU - Signed, 7. NWARPC FFY2026_STBGPA Award Letter_Hwy112, 8. Hwy. 112 Partnering Agreement - Executed, 9. Resolution 27-17

113 West Mountain Street
Fayetteville, AR 72701
(479) 575-8323

File #: 2026-1867

A RESOLUTION TO APPROVE THE SECOND SUPPLEMENT TO THE AGREEMENT OF UNDERSTANDING WITH THE ARKANSAS DEPARTMENT OF TRANSPORTATION FOR THE HIGHWAY 112 POPLAR STREET TO DRAKE STREET PROJECT TO ACCEPT FEDERAL-AID FUNDING IN THE AMOUNT OF $500,000.00 WITH A REQUIRED CITY MATCH OF $125,000.00, AND TO APPROVE A BUDGET AMENDMENT

WHEREAS, on January 3, 2017, City Council passed Resolution 27-17 approving the City's participation in a revised Partnering Agreement with the Arkansas Department of Transportation (ARDOT) to make needed improvements to Highway 112; and

WHEREAS, upon completion of the improvements to Highway 112, the City agreed to assume ownership and responsibility of Highway 112 from Highway 16 to Interstate 49; and

WHEREAS, on September 19, 2017, the City agreed to manage the improvements of Highway 112 from Poplar Street to Drake Street including the design, right-of-way acquisition, utility relocations, bidding and construction management; and

WHEREAS, on June 10, 2025, Mayor Rawn signed a letter constituting a supplement to the Agreement of Understanding that incorporated $144,000.00 of Federal-aid Transportation Alternatives Program funding awarded to the City into this project to construct a 12-foot path; and

WHEREAS, ARDOT is requesting a modification to the project Agreement of Understanding to incorporate the $500,000.00 of STBGP-A federal funds into this project for the construction phase.

NOW, THEREFORE, BE IT RESOLVED BY THE CITY COUNCIL OF THE CITY OF FAYETTEVILLE, ARKANSAS:

Section 1: That the City Council of the City of Fayetteville, Arkansas hereby authorizes Mayor Rawn to sign the second amendment to the Agreement of Understanding with the Arkansas Department of Transportation for the Highway 112 Poplar Street to Drake Street project, a copy of which is attached to this Resolution.

Section 2: That the City Council of the City of Fayetteville, Arkansas hereby authorizes the acceptance of federal-aid funding in the amount of $500,000.00 with the required match in the amount of $125,000.00 to be paid by the City of Fayetteville.

Section 3: That the City Council of the City of Fayetteville, Arkansas hereby approves a budget amendment, a copy of which is attached to this Resolution.

City of Fayetteville Staff Review Form

2026-1867

Item ID

6/16/2026

City Council Meeting Date - Agenda Item Only
N/A for Non-Agenda Item

Paul Libertini	5/21/2026	ENGINEERING (621)
Submitted By	**Submitted Date**	**Division / Department**

Action Recommendation:

A Resolution authorizing the Mayor to sign a letter dated August 27, 2025 from the Arkansas State Highway Commission constituting the second supplement to the Agreement of Understanding (AOU) for this project, and approving a budget amendment in the amount of $625,000 to recognize federal-aid funding of $500,000 and the required 20% local match of $125,000.

Budget Impact:

4601.860.7236-5809.00 4702.860.7236-5809.00	Bond Program Grant Matching Street Projects 2022 Bonds
Account Number	Fund
46020.7236.3800	Hwy 112 (Poplar St to Drake St)
Project Number	Project Title

Budgeted Item?	Yes	Total Amended Budget	$	20,113,962.00
		Expenses (Actual+Encum)	$	7,126,386.08
		Available Budget	$	**12,987,575.92**
Does item have a direct cost?	No	Item Cost	$	-
Is a Budget Amendment attached?	Yes	Budget Amendment	$	500,000.00
		Remaining Budget	$	**13,487,575.92**

Purchase Order Number:

Previous Ordinance or Resolution # 27-17, 60-25

Change Order Number:

Approval Date:

Original Contract Number:

Comments:

City of Fayetteville, Arkansas - Budget Amendment/Adjustment (Agenda)

Budget Year	Division /Org2	ENGINEERING (621)	BA Number
2026	Requestor:	Paul Libertini	

BUDGET AMENDMENT/ADJUSTMENT DESCRIPTION:

Recognize $500,000 of FFY 2026 Surface Transportation Block Grant Program - Attributable (STBGP-A) funds awarded by the Northwest Arkansas Regional Planning Commission (NWARPC) for the construction of Hwy 112 (Poplar St - Drake St) which requires a City match of $125,000 (20%). Move funding in project 06035.3800 to 46020.7236.3800. Allocate 20% match for 12 foot side path.

COUNCIL DATE: 6/16/2026

ITEM ID#: **2026-1867**

Holly Black
5/27/2026 7:46 AM

Budget Division Date

TYPE: **D - (City Council)**

JOURNAL #:

GLDATE:

RESOLUTION/ORDINANCE

CHKD/POSTED: /

v.202658

TOTAL	500,000	500,000				
	Increase / (Decrease)		Project.Sub#			
Account Number	Expense	Revenue	Project	Sub.Detl	AT	Account Name
4601.860.7236-4309.00	-	500,000	46020	7236.3800	RE	Federal Grants - Capital
4601.860.7236-5809.00	500,000	-	46020	7236.3800	EX	Improvements - Street
4702.860.7236-5809.00	125,000	-	46020	7236.3800	EX	Improvements - Street
4702.860.7999-5899.00	(125,000)	-	46020	7999	EX	Unallocated - Budget
	-	-				
4470.800.8835-4309.00	-	(926,080)	06035	3800	RE	Federal Grants - Capital
4470.800.8835-5314.00	(782,080)	-	06035	3800	EX	Professional Services
4470.800.8835-5809.00	(144,000)	-	06035	3800	EX	Improvements - Street
4601.860.7236-4309.00	-	782,080	46020	7236.3800	RE	Federal Grants - Capital
4601.860.7236-4309.00	-	144,000	46020	7236.3800	RE	Federal Grants - Capital
4601.860.7236-5860.02	782,080	-	46020	7236.3800	EX	Capital Prof Svcs - Engineering/Architectura
4601.860.7236-5809.00	144,000	-	46020	7236.3800	EX	Improvements - Street
4702.860.7236-5809.00	36,000	-	46020	7236.3800	EX	Improvements - Street
4702.860.7999-5899.00	(36,000)	-	46020	7999	EX	Unallocated - Budget
	-	-				
	-	-				
	-	-				

ARKANSAS STATE HIGHWAY COMMISSION

PHILIP TALDO
CHAIRMAN
SPRINGDALE

KEITH GIBSON
VICE CHAIRMAN
FORT SMITH

MARIE HOLDER
LITTLE ROCK

DAVID M. HAAK
TEXARKANA

JERRY L. HALSEY, JR.
JONESBORO

JARED D. WILEY, P.E.
DIRECTOR

P.O. Box 2261 • Little Rock, Arkansas 72203-2261
Phone (501) 569-2000 • Voice/TTY 711 • Fax (501) 569-2400
www.ArDOT.gov • www.IDriveArkansas.com

August 27, 2025

The Honorable Molly Rawn
Mayor of Fayetteville
113 W. Mountain
Fayetteville, AR 72701

Mr. Tim Conklin
Executive Director
Northwest Arkansas Regional Planning Commission
1311 Clayton St.
Springdale, AR 72762

Dear Mayor Rawn and Mr. Conklin:

Reference is made to the City's award of $500,000 in 2026 Surface Transportation Block Grant Program – Attributable (STBGP-A) funds by the Northwest Arkansas Regional Planning Commission (NWARPC) for the construction phase of Job 040720, Poplar St. – Drake St. (Fayetteville) (S). This awarded Federal-aid funding will now be incorporated into Job 040720. Therefore, the Agreement of Understanding must be modified.

This letter, when signed by you and returned to the Department, will constitute a second supplement to the Agreement between the City of Fayetteville and the Department for Job 040720. While NWARPC was not a party to the original Agreement, they are being added via this supplement with the sole responsibility of providing additional Federal-aid funding for Job 040720. All other conditions of the Agreement will remain in effect. The total Federal-aid available for Job 040720 will now be $644,000.00.

Please retain a copy of the signed letter for your files. If you have any questions concerning this matter, please contact David Siskowski, Division Head – Local Programs, at (501) 435-3255.

Sincerely,

Jared D. Wiley, P.E.
Director

APPROVED:

_____
Molly Rawn
Mayor

APPROVED:

_____
Tim Conklin
Executive Director

c: Highway Commission
Chief Engineer – Operations
Chief Engineer – Preconstruction
Assistant Chief Engineer – Design
Assistant Chief Engineer – Planning
Assistant Chief Engineer – Program Delivery
Consultant Contracts
Local Programs
Program Management
Roadway Design
District 4
Job 040720 'C' File

ARKANSAS STATE HIGHWAY COMMISSION

PHILIP TALDO
CHAIRMAN
SPRINGDALE

KEITH GIBSON
VICE CHAIRMAN
FORT SMITH

MARIE HOLDER
LITTLE ROCK

DAVID M. HAAK
TEXARKANA

JERRY L. HALSEY, JR.
JONESBORO

JARED D. WILEY, P.E.
DIRECTOR

P.O. Box 2261 • Little Rock, Arkansas 72203-2261
Phone (501) 569-2000 • Voice/TTY 711 • Fax (501) 569-2400
www.ArDOT.gov • www.IDriveArkansas.com

August 27, 2025

The Honorable Molly Rawn
Mayor of Fayetteville
113 W. Mountain
Fayetteville, AR 72701

Mr. Tim Conklin
Executive Director
Northwest Arkansas Regional Planning Commission
1311 Clayton St.
Springdale, AR 72762

Dear Mayor Rawn and Mr. Conklin:

Reference is made to the City's award of $500,000 in 2026 Surface Transportation Block Grant Program – Attributable (STBGP-A) funds by the Northwest Arkansas Regional Planning Commission (NWARPC) for the construction phase of Job 040720, Poplar St. – Drake St. (Fayetteville) (S). This awarded Federal-aid funding will now be incorporated into Job 040720. Therefore, the Agreement of Understanding must be modified.

This letter, when signed by you and returned to the Department, will constitute a second supplement to the Agreement between the City of Fayetteville and the Department for Job 040720. While NWARPC was not a party to the original Agreement, they are being added via this supplement with the sole responsibility of providing additional Federal-aid funding for Job 040720. All other conditions of the Agreement will remain in effect. The total Federal-aid available for Job 040720 will now be $644,000.00.

Please retain a copy of the signed letter for your files. If you have any questions concerning this matter, please contact David Siskowski, Division Head – Local Programs, at (501) 435-3255.

Sincerely,

Jared D. Wiley, P.E.
Director

APPROVED:

Molly Rawn
Mayor

APPROVED:

Tim Conklin
Executive Director

c: Highway Commission
Chief Engineer – Operations
Chief Engineer – Preconstruction
Assistant Chief Engineer – Design
Assistant Chief Engineer – Planning
Assistant Chief Engineer – Program Delivery
Consultant Contracts
Local Programs
Program Management
Roadway Design
District 4
Job 040720 'C' File

NWA Regional Planning Commission

NORTHWEST ARKANSAS REGIONAL PLANNING COMMISSION

1311 Clayton St., Springdale, Arkansas, 72762

• (479) 751 7125 • Fax: (479) 751 7150 • http://nwarpc.org

June 17, 2025

Mayor Molly Rawn
City of Fayetteville
113 W Mountain
Fayetteville, AR 72701

Re: Hwy 112/Garland Ave. (Poplar to Drake St) (Job No. TBD) – Construction
NWARPC FFY 2026 Surface Transportation Block Grant Program – Attributable (STBGP-A)
Total NWARPC Federal Funds Awarded to Project to Date: $500,000

Dear Mayor Rawn:

I am pleased to inform you that the Hwy 112/Garland Ave. (Poplar to Drake St) (Job No. TBD) was selected by the Northwest Arkansas Regional Planning Commission on May 28, 2025, for Federal Fiscal Year (FFY) 2026 NWARPC Surface Transportation Block Grant Program – Attributable (STBGP-A) funding.

The awarded FY2026 NWARPC STBGP-A funds and the required local match are shown below:

NWARPC STBGP-A	**$500,000**	**(80% Federal)**
City Match	**$125,000**	**(20% Local Match)**
Total	**$625,000**	

The NWARPC STBGP-A funding is subject to an obligation limitation and the total available funds may change after final FFY 2026 funding is published by the Federal Highway Administration (FHWA).

These funds are required to be obligated by the end of the Federal Fiscal Year that ends on September 30, 2026. All required submittals to the Arkansas Department of Transportation (ARDOT) and required approvals for this project should be completed by August 15, 2026, to allow sufficient time to obligate the STBGP-A funds for this project.

ARDOT administers the Local Public Agency (LPA) program, providing oversight for federal-aid project delivery and ensuring compliance with applicable provisions of Title 23, U.S.C. ARDOT also processes reimbursement requests for NWARPC funding awards. For more details, please refer to the ARDOT Local Public Agency Project Manual. Required training for this program will be conducted by ARDOT on **Thursday, July 17, 2025, from 8:30 a.m. to 9:30 a.m. at the NWARPC office**. Please ensure the appropriate staff member(s) attend.

Please let us know if you have any questions or need additional information regarding this program.

Sincerely,

Tim Conklin
Executive Director

Cc: David Siskowski, ARDOT
Whitnee V. Bullerwell, ARDOT
Minghua Qiu Miller, ARDOT
Carlos Merideth, ARDOT
Ashley Smith, ARDOT
Sunny Farmahan, ARDOT
Anthony Hunter, ARDOT
Chris Brown, Fayetteville Public Works Director
Paul Libertini, Fayetteville Staff Engineer

AGREEMENT OF UNDERSTANDING

BETWEEN

THE CITY OF FAYETTEVILLE

AND

THE ARKANSAS DEPARTMENT OF TRANSPORTATION

RELATIVE TO

Implementation of **Highway 112 Improvements between Highway 16 and Interstate 49** in Fayetteville, Washington County (hereinafter called the "Projects").

WHEREAS, the City of Fayetteville (hereinafter called the "City") has expressed interest in partnering with the Arkansas Department of Transportation (hereinafter called the "Department") for the Projects; and

WHEREAS, Resolution No. 27-17 from the City agrees to contribute $3,358,600 for the Projects and to accept ownership and responsibility of the portions of Highway 112 between Highway 16 and Interstate 49 upon completion of the improvements; and

WHEREAS, Arkansas State Highway Commission Minute Order 2017-012 has authorized the Director to enter into the necessary partnering agreements with the City for the Projects; and

WHEREAS, it is understood that the City and the Department will adhere to the General Requirements for Recipients and Sub-Recipients Concerning Disadvantaged Business Enterprises (DBEs) (Attachment A) and that, as part of these requirements, the Department may set goals for DBE participation in the Project, ranging from 0% to 100%, that are practical and related to the potential availability of DBEs in desired areas of expertise.

IT IS HEREBY AGREED that the City and the Department will accept the additional responsibilities and assigned duties as described hereinafter.

THE CITY WILL:

1. Be responsible for the following in relation to Job 040582, Razorback Rd.-Garland Ave. (Hwy. 112) (Fayetteville) (S) and overlays on Highway 112 from Maple Street to North Street and from Leroy Pond Drive to the beginning of Job 040582:
    a. Be responsible for $3,358,600 in project costs as shown in Attachment B for Job 040582.
    b. Be responsible for any increases in construction, right of way, or utility costs resulting from changes in project scope proposed by the City.
    c. Be responsible for any desired revisions to the current design of Job 040582, along with associated engineering costs.
    d. Be responsible for any costs resulting from inclusion of desired revisions in project scope outside the Department's typical overlay design for the Highway 112 overlays.
    e. Prepare plans, specifications, and a cost estimate for construction. A registered professional engineer must sign the plans and specifications for the Project. (See Attachment C for items to be included in the bid proposal.)

f. Understand that **expenditures for work performed by the City's forces (including preliminary and construction engineering, environmental documentation, and right of way acquisition services) are not eligible for reimbursement with federal funds**.

g. Ensure that the plans and specifications comply with the Americans with Disabilities Act (ADA), the American Association of State Highway and Transportation Officials (AASHTO) design standards, and all other applicable state and federal regulations, including airport clearance when necessary, for the type of work involved.

h. Submit final plans for Department review.

i. Submit a certification letter (Attachment D), including all items noted, to the Department when requesting authority to advertise the Projects for construction bids.

j. Advertise for bids in accordance with federal procedures as shown in Attachment E. **NOTE: FHWA authorization and Department approval must be given prior to advertising for construction bids.**

k. Forward a copy of all addenda issued for the Project during the advertisement to the Department.

l. After bids are opened and reviewed, submit a Certification Letter Requesting Concurrence in Award (Attachment F), including all items noted, to the Department.

m. Prior to issuing the notice to proceed to the Contractor, hold a pre-construction meeting with the Contractor and invite the Department's Resident Engineer assigned to the Project.

n. Make payments to the contractor for work accomplished in accordance with the plans and specifications. Then request reimbursement from the Department for costs exceeding $2,359,118 on the Construction Certification and Reimbursement Request (CCRR) form (Attachment G). Reimbursement requests should be submitted, at minimum, every three (3) months and not more than once per month.

o. Provide construction engineering and inspection services, including associated costs, for the Project.

p. Attach LPA Report of Daily Work Performed (Attachment H) for all days that correspond with each CCRR submittal.

q. Prior to executing the work, submit construction contract change orders to the Department's Resident Engineer in charge of reimbursements for review and approval.

r. Be responsible for any increased costs resulting from desired revisions in project scope, whether during the design phase or during construction as a change order.

s. Upon completion of the Project, hold a final acceptance meeting for the Project and submit the LPA Final Acceptance Report form certifying that the Project was accomplished in accordance with the plans and specifications (Attachment I). This form must be signed by the engineer performing construction inspection on the Project, the Department's Resident Engineer assigned to the project, the City's full-time employee in responsible charge, and the City's Mayor.

t. Upon completion of these improvements to Highway 112, accept ownership and responsibility of the portion of Highway 112, Section 0 between Highway 16 (W. 15th Street) and Highway 112 Spur (Wedington Drive).

2. Be responsible for the following in relation to projects scheduled to widen Highway 112 between Poplar Street and Interstate 49:

    a. Be responsible for hiring a consultant engineering firm(s) in accordance with the Local Agency Consultant Selection Procedures (Attachment K) to provide engineering services which include environmental documentation, preliminary engineering, and construction engineering for the Project. **NOTE: FHWA authorization and Department approval must be given prior to issuing a work order to the consultant for federal funds to be allowed in this phase.**

    b. Prepare plans, specifications, and a cost estimate for construction. A registered professional engineer must sign the plans and specifications for the Project. (See Attachment C for items to be included in the bid proposal.)

    c. Understand that **expenditures for work performed by the City's forces (including preliminary and construction engineering, environmental documentation, and right of way acquisition services) are not eligible for reimbursement with federal funds.**

    d. Make periodic payments to the consultant for preliminary engineering for the Project and request reimbursement from the Department. Reimbursement requests should be submitted, at minimum, every three (3) months and not more than once per month.

    e. Prepare the necessary environmental documentation as required by FHWA and conduct any required public involvement meetings and public hearings.

    f. Ensure that the plans and specifications comply with the Americans with Disabilities Act (ADA), the American Association of State Highway and Transportation Officials (AASHTO) design standards, and all other applicable state and federal regulations, including airport clearance when necessary, for the type of work involved.

    g. Before acquiring property or relocating utilities, contact the Department's Right of Way Division to obtain the procedures for acquiring right-of-way and adjusting utilities in compliance with federal regulations. **NOTE: Failure to notify the Department prior to initiating these phases of work may result in all project expenditures being declared non-participating in federal funds.**

    h. Acquire property in accordance with the Uniform Relocation Assistance and Real Property Acquisition Policies Act of 1970, as amended (commonly referred to as the "Uniform Act"), and request reimbursement from the Department

    i. Ensure the preparation of utility adjustment and right-of-way plans are in accordance with Arkansas State Highway Commission Policy.

    j. Provide a copy of the registered deed or other approved documentation and an appropriate certification stating the City's clear and unencumbered title to any right-of-way to be used for the Project (See Attachment L). **NOTE: Any property that is to become Department right-of-way must be acquired in the Highway Commission's name.**

    k. Submit plans at 10%, 30%, 60%, and 90% completion stages for Department review.

    l. Submit a certification letter (Attachment D), including all items noted, to the Department when requesting authority to advertise the Project for construction bids.

    m. Advertise for bids in accordance with federal procedures as shown in Attachment E. **NOTE: FHWA authorization and Department approval must be given prior to advertising for construction bids.**

n. Forward a copy of all addenda issued for the Project during the advertisement to the Department.

o. After bids are opened and reviewed, submit a Certification Letter Requesting Concurrence in Award (Attachment F), including all items noted, to the Department.

p. Prior to issuing the notice to proceed to the Contractor, hold a pre-construction meeting with the Contractor and invite the Department's Resident Engineer assigned to the Project.

q. Make periodic payments to the consultant for construction engineering for the Project and request reimbursement from the Department. Reimbursement requests should be submitted, at minimum, every three (3) months and not more than once per month.

r. Make payments to the contractor for work accomplished in accordance with the plans and specifications and approved by the Department. Then request reimbursement from the Department on the Construction Certification and Reimbursement Request (CCRR) form (Attachment G). Reimbursement requests should be submitted, at minimum, every three (3) months and not more than once per month.

s. Attach LPA Report of Daily Work Performed (Attachment H) for all days that correspond with each CCRR submittal.

t. Prior to executing the work, submit construction contract change orders to the Department's Resident Engineer in charge of reimbursements for review and approval.

u. Be responsible for any increased costs resulting from desired revisions in project scope that exceed typical highway design criteria, whether during the design phase or during construction as a change order.

v. Upon completion of the Project, hold a final acceptance meeting for the Project and submit the LPA Final Acceptance Report form certifying that the Project was accomplished in accordance with the plans and specifications (Attachment I). This form must be signed by the engineer performing construction inspection on the Project, the Department's Resident Engineer assigned to the project, the City's full-time employee in responsible charge, and the City's Mayor.

w. Upon completion of these improvements to Highway 112, accept ownership and responsibility of the portion of Highway 112, Section 1 between Highway 112 Spur (Wedington Drive) and the northbound ramps of Interstate 49.

3. Notify the Department in writing who the City designates as its full-time employee to be in responsible charge of the day to day oversight of the Projects (Attachment M). The duties and functions of this person are to:

- Oversee project activities, including those dealing with cost, time, adherence to contract requirements, construction quality and scope of Federal-aid projects;
- Maintain familiarity of day to day project operations, including project safety issues;
- Make or participate in decisions about changed conditions or scope changes that require change orders and/or supplemental agreements;
- During construction, visit and review the project on a daily basis;
- Review financial processes, transactions and documentation to ensure that safeguards are in place to minimize fraud, waste, and abuse;

- Direct project staff, City or consultant, to carry out project administration and contract oversight, including proper documentation;
- Be aware of the qualifications, assignments and on-the-job performance of the City and consultant staff at all stages of the project.

4. Maintain accounting records to adequately support reimbursement with Federal-aid funds and be responsible for the inspection, measurement and documentation of pay items, and certification of all work in accordance with the plans and specifications for the Projects and for monitoring the Contractor and subcontractor(s) for compliance with the provisions of FHWA-1273, Required Contract Provisions, Federal-aid Construction Contracts, and Supplements.
5. Pay all unpaid claims for all materials, labor, and supplies entered into contingent or incidental to the construction of said work or used in the course of said work including but not limited to materials, labor, and supplies described in and provided for in Act Nos. 65 and 368 of 1929, Act No. 82 of 1935, and Acts amendatory thereof.
6. Assure that its policies and practices with regard to its employees, any part of whose compensation is reimbursed from federal funds, will be without regard to race, color, religion, sex, national origin, age, or disability in compliance with the Civil Rights Act of 1964, the Age Discrimination in Employment Act of 1967, The Americans with Disabilities Act of 1990, as amended, and Title 49 of the Code of Federal Regulations Part 21 (49 CFR 21), Nondiscrimination in Federally-Assisted Programs of the Department of Transportation.
7. Retain all records relating to inspection and certification, the Contractor's billing statements, and any other files necessary to document the performance and completion of the work in accordance with requirements of 49 CFR 18.42 - Uniform Administrative Requirements for Grants and Cooperative Agreements to State and Local Governments (Attachment N).
8. Grant the right of access to the City's records pertinent to the Projects and the right to audit by the Department and Federal Highway Administration officials.
9. Be responsible for 100% of all project costs incurred should the Project not be completed as specified.
10. Sign and transmit to the Department the Certification for Grants, Loans, and Cooperative Agreements (Attachment O), which is necessary for Project participation.
11. Repay to the Department the federal share of the cost of any portion of the Projects if, for any reason, federal participation is removed due to actions or inactions of the City, its agents, its employees, or its assigns or the City's consultants or contractors or their agents. Such actions or inactions shall include, but are not limited to, federal non-participation arising from problems with design plans, specifications, construction, change orders, construction inspection, or contractor payment procedures. The City understands and agrees that the Department may cause necessary funds to be withheld from the City 's Motor Fuel Tax allotment should the City fail to pay to the Department any required funds, fail to complete the Project as specified, or fail to adequately maintain or operate the Projects.
12. Be responsible for all costs not provided by the Federal Highway Administration or the Department.
13. Repay to the Department the federal share of the cost of this project if for any reason the Federal Highway Administration removes federal participation.

14. Retain total, direct control over the Projects throughout the life of all project improvements outside of the Department's right-of-way and **not, without prior approval from the Department**:
    - sell, transfer, or otherwise abandon any portion of the Projects;
    - change the intended use of the Projects;
    - make significant alterations to any improvements constructed with Federal-aid funds; or
    - cease maintenance or operation of a project due to the Project's obsolescence.
15. Be responsible for satisfactory maintenance and operation of all improvements and for adopting regulations and ordinances as necessary to ensure this. Failure to adequately maintain and operate the Projects in accordance with Federal-aid requirements may result in the City's repayment of federal funds and may result in withholding all future Federal-aid.
16. Submit to the Department a Single Audit in accordance with the Office of Management and Budget (OMB) Circular A-133 each fiscal year that the City expends more than $500,000 of Federal-aid from any federal source including, but not limited to, the U.S. Department of Transportation. The fiscal year used for the reporting is based on the City's fiscal year. The $500,000 threshold is subject to change after OMB periodic reviews.
17. Complete and transmit to the Department both pages of the Federal Funding Accountability and Transparency Act (FFATA) Reporting Requirements (Attachment P).
18. Agree to promptly refund to the Department in full any and all revenue paid by the Department based upon claims adjudicated by the Arkansas Claims Commission or other legal forum sustained on account of the operations or actions of the City, including any act of omission, neglect or misconduct of the City. This obligation survives the termination or expiration of this Agreement.

THE DEPARTMENT WILL:

1. Be responsible for the following in relation to Job 040582, Razorback Rd.-Garland Ave. (Hwy. 112) (Fayetteville) (S) and overlays on Highway 112 from Maple Street to North Street and from Leroy Pond Drive to the beginning of Job 040582:
    a. Be responsible for all funding beyond the City's share of Job 040582, except for any increases in cost resulting from changes in project scope proposed by the City.
    b. Provide the funding necessary to overlay the segments of Highway 112. Costs will be limited to those associated with the Department's typical overlay design.
    c. Maintain an administrative file for the project and be responsible for administering Federal-aid funds.
    d. Provide environmental clearance for Highway 112 overlays.
    e. Review final plans and specifications submitted by the City.
    f. Ensure substantial compliance with federal contracting requirements through review of the bidding proposal for inclusion of required federal forms, review of the administration of the DBE program provisions, and general compliance with 23 CFR 635.
    g. Advise the City when to proceed with advertisement of the Project for construction bids.
    h. Review and concur in award of the construction contract for the Project.

i. Ensure that the City and the City's consultant provide adequate supervision and inspection of the Project by performing periodic inspections with the City's representatives and their consultant to verify that the work being performed by the City's contractor, and documented and certified by the City, meets the requirements of the Project plans, specifications, and all applicable FHWA and Department procedures. The Department intends to perform these inspections, at a minimum, when the construction work is approximately 10% and 50% completed. The Department will also participate in the final inspection of the Project.

j. Review and approve any necessary change orders for project/program eligibility.

k. Be responsible for increases in project costs due to change orders for normal bid item adjustments.

l. Reimburse the City 100% for eligible construction costs approved in the CCRR form (Attachment I). This reimbursement will be limited to the funding available at the time payment is requested. If the payment requested exceeds the funding available at the time, the difference will be reimbursed as additional funds for the Project become available.

m. Subject to the availability of funding allocated for the Project, pay the City the remaining amount due upon completion of the Project and submittal of the certified LPA Final Acceptance Report form (Attachment K).

n. Upon completion of these improvements to Highway 112, remove the portion of Highway 112, Section 0 between Highway 16 (W. 15th Street) and Highway 112 Spur (Wedington Drive) from the State Highway System and transfer ownership and responsibility to the City.

2. Be responsible for the following in relation to projects scheduled to widen Highway 112 between Poplar Street and Interstate 49:

a. Provide the City the amount of funding necessary for all phases of work to develop and construct the typical design section for an urban state highway, as shown on Attachment J, for this portion of Highway 112.

b. Evaluate the proposed typical design section versus the typical design section for an urban state highway, as shown on Attachment J, and determine how any changes will affect the estimated cost. City-requested changes to the typical design section that are determined to be budget-neutral will not require additional funding from the City.

c. Maintain an administrative file for the project and be responsible for administering Federal-aid funds.

d. Coordinate with the City to procure required professional services such as design consultants, construction engineering and inspection consultants, and right of way consultants.

e. Review environmental documentation as prepared by the City.

f. Review plans and specifications submitted by the City.

g. Reimburse the City 100% for eligible professional services, procured using Department-approved procedures, upon review and approval of reimbursement requests.

h. Notify the City when right-of-way and/or utility plans are approved and the City may proceed with right-of-way acquisition and/or utility adjustments.

i. Ensure substantial compliance with federal contracting requirements through review of the bidding proposal for inclusion of required federal forms, review of the administration of the DBE program provisions, and general compliance with 23 CFR 635.

j. Advise the City when to proceed with advertisement of the Project for construction bids.

k. Review and concur in award of the construction contract for the Project.

l. Ensure that the City and the City's consultant provide adequate supervision and inspection of the Project by performing periodic inspections with the City's representatives and their consultant to verify that the work being performed by the City's contractor, and documented and certified by the City, meets the requirements of the Project plans, specifications, and all applicable FHWA and Department procedures. The Department intends to perform these inspections, at a minimum, when the construction work is approximately 10% and 50% completed. The Department will also participate in the final inspection of the Project.

m. Review and approve any necessary change orders for project/program eligibility.

n. Be responsible for increases in project costs due to change orders for normal bid item adjustments.

o. Reimburse the City 100% for eligible construction costs approved in the CCRR form (Attachment G). This reimbursement will be limited to the funding available at the time payment is requested. If the payment requested exceeds the funding available at the time, the difference will be reimbursed as additional funds for the Project become available.

p. Subject to the availability of funding allocated for the Project, pay the City the remaining amount due upon completion of the Project and submittal of the certified LPA Final Acceptance Report form (Attachment I).

q. Upon completion of these improvements to Highway 112, remove the portion of Highway 112, Section 1 between Highway 112 Spur (Wedington Drive) and Interstate 49 from the State Highway System and transfer ownership and responsibility to the City.

IT IS FURTHER AGREED that should the City fail to fulfill its responsibilities and assigned duties as related in this Agreement, such failure may disqualify the City from receiving future Federal-aid highway funds.

IT IS FURTHER AGREED, that should the City fail to pay to the Department any required funds due for project implementation or fail to complete the Project as specified in this Agreement, or fail to adequately maintain or operate the Project, the Department may cause such funds as may be required to be withheld from the City's Motor Fuel Tax allotment.

IN WITNESS WHEREOF, the parties thereto have executed this Agreement this 19th day of September, 2017.

ARKANSAS DEPARTMENT OF TRANSPORTATION

Scott E. Bennett, P.E.
Director

CITY OF FAYETTEVILLE

Lioneld Jordan
Mayor

Kit Williams
City Attorney

ARKANSAS DEPARTMENT OF TRANSPORTATION

NOTICE OF NONDISCRIMINATION

The Arkansas Department of Transportation (Department) complies with all civil rights provisions of federal statutes and related authorities that prohibit discrimination in programs and activities receiving federal financial assistance. Therefore, the Department does not discriminate on the basis of race, sex, color, age, national origin, religion (not applicable as a protected group under the Federal Motor Carrier Safety Administration Title VI Program), disability, Limited English Proficiency (LEP), or low-income status in the admission, access to and treatment in the Department's programs and activities, as well as the Department's hiring or employment practices. Complaints of alleged discrimination and inquiries regarding the Department's nondiscrimination policies may be directed to Joanna P. McFadden Section Head - EEO/DBE (ADA/504/Title VI Coordinator), P. O. Box 2261, Little Rock, AR 72203, (501) 569-2298, (Voice/TTY 711), or the following email address: joanna.mcfadden@ardot.gov

Free language assistance for Limited English Proficient individuals is available upon request.

This notice is available from the ADA/504/Title VI Coordinator in large print, on audiotape and in Braille.

113 West Mountain Street
Fayetteville, AR 72701
(479) 575-8323

Resolution: 27-17

File Number: 2016-0666

ARKANSAS STATE HIGHWAY AND TRANSPORTATION DEPARTMENT:

A RESOLUTION TO ALLOW THE CITY OF FAYETTEVILLE TO ENTER INTO A PARTNERING AGREEMENT WITH THE ARKANSAS STATE HIGHWAY AND TRANSPORTATION DEPARTMENT FOR IMPROVEMENTS TO HIGHWAY 112 BETWEEN RAZORBACK ROAD AND GARLAND AVENUE, AND TO APPROVE THE RECLASSIFICATION OF HIGHWAY 112 BETWEEN 15TH STREET AND INTERSTATE 49 AS A CITY STREET.

WHEREAS, the City of Fayetteville (City) and the Arkansas State Highway and Transportation Department (Department) have identified a need for improvements to Highway 112 between Razorback Road and Garland Avenue in Fayetteville; and

WHEREAS, the original partnering agreement between the Department and the City was as follows:

1. The Department was responsible to fund and handle project development, which is complete. The Department is also responsible for advertising, awarding the bid, and providing construction inspection.

2. The City is to fund utilities, construction and construction inspection; and

WHEREAS, bids were received twice on this project, and each time the low bid was significantly over the City's budget; and

WHEREAS, in order to move this project forward, a revised partnering agreement is proposed as follows:

1. The amount of City funds available for Job 040582 is capped at $3,358,600.00 as shown on Attachment A to this Resolution. The Department will provide the gap funding needed to construct the project.

2. The City will revise the current design. However, any increase in the current scope that results in a higher project cost will be the responsibility of the City and will be in addition to the cap amount of $3,358,600.

3. The Department will advertise and award the project. The City may inspect the project. The Department will inspect the project if requested by the City.

4. Once the project is let to contract, an increase in cost due to added scope by change order will be the responsibility of the City. An increase in cost due to a change order for a normal bid item adjustment will be the responsibility of the Department.

5. The Department will fund the cost to overlay the segments from Maple Street to North Street and from Leroy Pond Drive north to the beginning of Job 040582. The City may develop, advertise, award and inspect the project. The Department will provide these services if requested by the City. Any additional scope items to the Department's typical overlay design that add cost to this improvement will be the responsibility of the City.

6. The Statewide Transportation Improvement Program for Federal Fiscal Years 2016-2020 (STIP) includes a project to widen Highway 112 from Poplar Street to Van Asche Drive. The City desires to handle all phases of project development, advertise, award, and inspect the portion from Poplar Street to Interstate 49. The Department will provide the amount of funding necessary for all phases of work to develop and construct the typical design section for an urban state highway as shown on Attachment B to this Resolution. The cost of additional features outside of this standard scope that increase the total cost beyond that of the typical design section will be the responsibility of the City; and

WHEREAS, upon completion of the improvements aforementioned, the City agrees to assume ownership and responsibility of Highway 112 from Highway 16 (15th Street) to Interstate 49 as shown on Attachment C to this Resolution.

NOW, THEREFORE, BE IT RESOLVED BY THE CITY COUNCIL OF THE CITY OF FAYETTEVILLE, ARKANSAS:

Section 1. That the City Council of the City of Fayetteville, Arkansas hereby approves the City's participation in this Partnering Agreement in accordance with its designated responsibilities in this project.

Section 2. That the City Council of the City of Fayetteville, Arkansas authorizes Mayor Jordan to execute all appropriate agreements and contracts necessary to expedite the construction of this project.

Section 3. That the City Council of the City of Fayetteville, Arkansas hereby pledges its full support and hereby requests that the Arkansas State Highway and Transportation Department initiate action to implement this project.

PASSED and APPROVED on 1/3/2017

Approved:

Lioneld Jordan, Mayor

Attest:

Sondra E. Smith, City Clerk Treasurer

CITY CLERK / TREASURER CITY OF FAYETTEVILLE ARKANSAS WASHINGTON COUNTY

City of Fayetteville, Arkansas

113 West Mountain Street
Fayetteville, AR 72701
(479) 575-8323

Text File

File Number: 2016-0666

Agenda Date: 1/3/2017 **Version:** 1 **Status:** Passed

In Control: City Council Meeting **File Type:** Resolution

Agenda Number: C. 4

ARKANSAS STATE HIGHWAY AND TRANSPORTATION DEPARTMENT:

A RESOLUTION TO ALLOW THE CITY OF FAYETTEVILLE TO ENTER INTO A PARTNERING AGREEMENT WITH THE ARKANSAS STATE HIGHWAY AND TRANSPORTATION DEPARTMENT FOR IMPROVEMENTS TO HIGHWAY 112 BETWEEN RAZORBACK ROAD AND GARLAND AVENUE, AND TO APPROVE THE RECLASSIFICATION OF HIGHWAY 112 BETWEEN 15TH STREET AND INTERSTATE 49 AS A CITY STREET

WHEREAS, the City of Fayetteville (City) and the Arkansas State Highway and Transportation Department (Department) have identified a need for improvements to Highway 112 between Razorback Road and Garland Avenue in Fayetteville; and

WHEREAS, the original partnering agreement between the Department and the City was as follows:

1. The Department was responsible to fund and handle project development, which is complete. The Department is also responsible for advertising, awarding the bid, and providing construction inspection.

2. The City is to fund utilities, construction and construction inspection; and

WHEREAS, bids were received twice on this project, and each time the low bid was significantly over the City's budget; and

WHEREAS, in order to move this project forward, a revised partnering agreement is proposed as follows:

1. The amount of City funds available for Job 040582 is capped at $3,358,600.00 as shown on Attachment A to this Resolution. The Department will provide the gap funding needed to construct the project.

2. The City will revise the current design. However, any increase in the current scope that results in a higher project cost will be the responsibility of the City and will be in addition to the cap amount of $3,358,600.

3. The Department will advertise and award the project. The City may inspect the project. The Department will inspect the project if requested by the City.

4. Once the project is let to contract, an increase in cost due to added scope by change order will be the

responsibility of the City. An increase in cost due to a change order for a normal bid item adjustment will be the responsibility of the Department.

5. The Department will fund the cost to overlay the segments from Maple Street to North Street and from Leroy Pond Drive north to the beginning of Job 040582. The City may develop, advertise, award and inspect the project. The Department will provide these services if requested by the City. Any additional scope items to the Department's typical overlay design that add cost to this improvement will be the responsibility of the City.

6. The Statewide Transportation Improvement Program for Federal Fiscal Years 2016-2020 (STIP) includes a project to widen Highway 112 from Poplar Street to Van Asche Drive. The City desires to handle all phases of project development, advertise, award, and inspect the portion from Poplar Street to Interstate 49. The Department will provide the amount of funding necessary for all phases of work to develop and construct the typical design section for an urban state highway as shown on Attachment B to this Resolution. The cost of additional features outside of this standard scope that increase the total cost beyond that of the typical design section will be the responsibility of the City; and

WHEREAS, upon completion of the improvements aforementioned, the City agrees to assume ownership and responsibility of Highway 112 from Highway 16 (15th Street) to Interstate 49 as shown on Attachment C to this Resolution.

NOW, THEREFORE, BE IT RESOLVED BY THE CITY COUNCIL OF THE CITY OF FAYETTEVILLE, ARKANSAS:

Section 1. That the City Council of the City of Fayetteville, Arkansas hereby approves the City's participation in this Partnering Agreement in accordance with its designated responsibilities in this project.

Section 2. That the City Council of the City of Fayetteville, Arkansas authorizes Mayor Jordan to execute all appropriate agreements and contracts necessary to expedite the construction of this project.

Section 3. That the City Council of the City of Fayetteville, Arkansas hereby pledges its full support and hereby requests that the Arkansas State Highway and Transportation Department initiate action to implement this project.

City of Fayetteville Staff Review Form

2016-0666

Legistar File ID

1/3/2017

City Council Meeting Date - Agenda Item Only
N/A for Non-Agenda Item

Chris Brown	12/16/2016	Engineering / Development Services Department
Submitted By	**Submitted Date**	**Division / Department**

Action Recommendation:

Approval of a Resolution to Enter into a Partnering Agreement with the Arkansas Highway and Transportation Department to complete certain segments and to Transfer Right of Way Jurisdiction to the City for Highway 112 from 15th Street to I-49

Budget Impact:

Account Number		Fund	
Project Number		Project Title	
Budgeted Item?	No	Current Budget	$ -
		Funds Obligated	$ -
		Current Balance	$ -
Does item have a cost?	No	Item Cost	
Budget Adjustment Attached?	No	Budget Adjustment	
		Remaining Budget	$ -

V20140710

Previous Ordinance or Resolution # _____

Original Contract Number: _____ Approval Date: _____

Comments:

CITY OF Fayetteville ARKANSAS

CITY COUNCIL AGENDA MEMO

MEETING OF JANUARY 3, 2017

TO: Mayor and City Council

THRU: Don Marr, Chief of Staff
Jeremy Pate, Development Services Director

FROM: Chris Brown, City Engineer CB

DATE: December 16, 2016

SUBJECT: **Resolution to Enter a Partnering Agreement with the Arkansas Highway and Transportation Department to complete certain segments and to Transfer Right of Way Jurisdiction to the City for Highway 112 from 15th Street to I-49**

RECOMMENDATION:
Staff recommends approval of a resolution to partner with the AHTD to widen and improve portions of Highway 112 between 15th Street and I-49, and to agree to the transfer of this segment from the AHTD to the City.

BACKGROUND:
Highway 112 is an Arkansas Highway and Transportation Department (AHTD) owned facility that functions as a major north-south arterial connecting I-49 to the north and Highway 71 to the south, and serves as the main north-south entrance to and access through the University of Arkansas. Over the past several years, segments of the roadway have been widened and improved through and near the campus, through a series of partnerships between the City, the UA, and the AHTD. The UA has planted and maintained the landscaping and trees on segments through campus and to the south of the campus since the completion of the widening and improvements.

In 2014, the City secured an additional $2.4 million in federal-aid funding for another segment of this route, between Garland Avenue and Razorback Road. However, construction bids received for the project have been over $4 million on two separate bidding occasions. This has stalled the construction of the project.

Remaining segments between 15th Street and I-49 that have not been widened or improved include Razorback Road, from Maple Street to Leroy Pond Drive, and Garland Avenue from Poplar Street to I-49.

DISCUSSION:
After the 2nd time receiving bids over $4 million on the Maple to Razorback segment of Highway 112, the City and UA met with the AHTD and began discussing an arrangement whereby the AHTD would provide funding to complete the construction of this segment, in exchange for the

City taking over the roadway as a City street. Ultimately, the attached proposal was developed by the AHTD, which includes:

1. The AHTD will provide additional funding to complete the improvements to the Garland to Razorback Road segment of Highway 112, and to overlay 112 on either side of this project, to provide a new condition roadway through the entire campus.
2. The AHTD will complete widening and improvements to Highway 112 north of Poplar to Van Asche, at no cost to the City. The City will be allowed to manage the design of the project.
3. In exchange, the City will accept Highway 112 between 15th Street and I-49 for maintenance in perpetuity; the route will be removed from the state highway system and will become a City street.

BUDGET/STAFF IMPACT:
While the proposed resolution does not obligate any City funds, subsequent agreements and construction contracts will require matching funds in the amount of $958,600. The UA has agreed to provide 50% of this amount per the attached letter; therefore, the cost to the City will be a maximum of $479,300. Funds are available in the Transportation Bond Program for this match amount.

Operational costs to the City in the short term are expected to be minimal due to the new condition of the majority of the section to be transferred to the City. Over the long term, overlay and other pavement maintenance costs will be the most significant expenses expected.

Attachments:
Resolution
Cost Spreadsheet
Map of proposed improvements and segment to be transferred to City
Letter from UA

CITY OF FAYETTEVILLE ARKANSAS

CITY COUNCIL MEMO
2026-1902

MEETING OF JUNE 16, 2026

TO: Mayor Rawn and City Council

THROUGH: Keith Macedo, Chief of Staff
Chris Brown, Public Works Director
Justin Bland, City Engineer

FROM: Paul Libertini, Staff Engineer

SUBJECT: **Millsap Rd & College Ave Intersection Impovements - Black Hills Energy Utility Work Agreement**

RECOMMENDATION:
Staff recommends approval of an agreement with Black Hills Energy Arkansas, Inc. in the amount of $302,040.00 for utility relocations associated with the Millsap Rd & College Ave Intersection Improvement project, and to approve a budget amendment in the amount of $320,000 which includes $17,960 in project contingency.

BACKGROUND:
This project includes improvements to Millsap Road near the intersection with College Avenue. The improvements to Millsap Road include an additional lane west of College Avenue to provide additional left turning capacity, realignment of lanes on both sides of College Avenue, signalization timing and phasing improvements and installation of crosswalks and pedestrian signals. During the intersection design process, it is standard procedure to contact all known Utility companies to determine if their facilities conflict with the proposed improvements. It was determined the Black Hills Energy owns a gas line that needs to be relocated to accommodate the new construction.

The City received authorization from the Arkansas Department of Transportation (ARDOT) to advertise this project for construction bids on April 24, 2026. The bid opening is scheduled for June 10th.

DISCUSSION:
Black Hills Energy has provided the City with design plans to relocate approximately 500 feet their natural gas line at an estimated cost of $302,040.00. After the relocation work has been completed, Black Hills Energy will submit an invoice based on actual costs to the City for payment.

BUDGET/STAFF IMPACT:
The City will pay Black Hills Energy for the completed relocation work and will subsequently submit the required paperwork to ARDOT for 80% reimbursement of the relocation cost. The City's 20% matching funds (Street Projects 2022 Bonds) were previously utilized for land acquisition for this project.

ATTACHMENTS: 3. Staff Review Form, 4. Budget Amendment, 5. Millsap & College, N Hemlock Award Letter, 6. Black Hills Energy Utility Work Agreement

113 West Mountain Street
Fayetteville, AR 72701
(479) 575-8323

File #: 2026-1902

A RESOLUTION TO APPROVE AN AGREEMENT WITH BLACK HILLS ENERGY ARKANSAS, INC. IN THE AMOUNT OF $302,040.00 FOR UTILITY RELOCATIONS ASSOCIATED WITH THE MILLSAP ROAD AND COLLEGE AVENUE INTERSECTION IMPROVEMENT PROJECT, TO APPROVE A PROJECT CONTINGENCY IN THE AMOUNT OF $17,960.00, AND TO APPROVE A BUDGET AMENDMENT IN THE AMOUNT OF $320,000.00

WHEREAS, the Millsap Road and College Avenue Intersection Improvement project will make improvements to Millsap Road that will include an additional lane west of College Avenue, realignment of lanes on both sides of College Avenue, signalization timing and phasing improvements and installation of crosswalks and pedestrian signals; and

WHEREAS, during the design process, it was determined that Black Hills Energy owns a gas line that needs to be relocated to accommodate the new construction; and

WHEREAS, Black Hills Energy has provided the City with design plans to relocate approximately 500 feet of natural gas line

NOW, THEREFORE, BE IT RESOLVED BY THE CITY COUNCIL OF THE CITY OF FAYETTEVILLE, ARKANSAS:

Section 1: That the City Council of the City of Fayetteville, Arkansas hereby authorizes Mayor Rawn to sign an agreement with Black Hills Energy Arkansas, Inc. in the amount of $302,040.00 for utility relocations associated with the Millsap Road and College Avenue Intersection Improvement project, and further approves a project contingency in the amount of $17,960.00.

Section 2: That the City Council of the City of Fayetteville, Arkansas hereby approves a budget amendment, a copy of which is attached to this Resolution.

City of Fayetteville Staff Review Form

2026-1902

Item ID

6/16/2026

City Council Meeting Date - Agenda Item Only
N/A for Non-Agenda Item

Paul Libertini	5/22/2026	ENGINEERING (621)
Submitted By	**Submitted Date**	**Division / Department**

Action Recommendation:

Staff recommends approval of an agreement with Black Hills Energy Arkansas, Inc. in the amount of $302,040.00 for utility relocations associated with the Millsap Rd & College Ave Intersection Improvement project, and approval of a budget amendment in the amount of $320,000 which includes $17,960 in project contingency.

Budget Impact:

4601.860.7227-5809.00	Bond Program Grant Matching
Account Number	Fund
46020.7227	Millsap/College Intersection Improvements
Project Number	Project Title

Budgeted Item?	Yes	Total Amended Budget	$	19,988,962.00
		Expenses (Actual+Encum)	$	7,126,386.00
		Available Budget	$	**12,862,576.00**
Does item have a direct cost?	Yes	Item Cost	$	302,040.00
Is a Budget Adjustment attached?	Yes	Budget Adjustment	$	320,000.00
		Remaining Budget	$	**12,880,536.00**

V20221130

Purchase Order Number: _____

Previous Ordinance or Resolution # 66-23

Change Order Number: _____

Approval Date: _____

Original Contract Number: _____

Comments:

City of Fayetteville, Arkansas - Budget Amendment/Adjustment (Agenda)

Budget Year	Division /Org2	ENGINEERING (621)	BA Number
2026	Requestor:	Paul Libertini	

BUDGET AMENDMENT/ADJUSTMENT DESCRIPTION:

Recognize $320,000 of FFY 2023 Surface Transportation Block Grant Program - Attributable (STBGP-A) funds awarded by the Northwest Arkansas Regional Planning Commission (NWARPC) for the construction of Millsap Rd & College Ave Intersection and N. Hemlock Ave. The City's 20% matching funds (Street Projects 2022 Bonds) were previously utilized for land acquisition for this project.

COUNCIL DATE: 6/16/2026

ITEM ID#: **2026-1902**

Holly Black
5/26/2026 5:09 PM

Budget Division Date

TYPE: **D - (City Council)**

JOURNAL #:

GLDATE:

CHKD/POSTED: /

RESOLUTION/ORDINANCE

v.202658

TOTAL	320,000	320,000				
	Increase / (Decrease)		Project.Sub#			
Account Number	Expense	Revenue	Project	Sub.Detl	AT	Account Name
4601.860.7227-4309.00	-	320,000	46020	7227	RE	Federal Grants - Capital
4601.860.7227-5809.00	302,040	-	46020	7227	EX	Improvements - Street
4601.860.7227-5911.99	17,960	-	46020	7227	EX	Contingency - Capital Project
	-	-				
	-	-				
	-	-				
	-	-				
	-	-				
	-	-				
	-	-				
	-	-				
	-	-				
	-	-				
	-	-				
	-	-				

NWA Regional Planning Commission

NORTHWEST ARKANSAS REGIONAL PLANNING COMMISSION

1311 Clayton St., Springdale, Arkansas, 72762

• (479) 751 7125 • Fax: (479) 751 7150 • http://nwarpc.org

September 20, 2022

Mayor Lioneld Jordan
City of Fayetteville
113 West Mountain Street
Fayetteville, AR 72701

Re: Millsap Rd. & College Ave. Intersection and N. Hemlock – Construction
FFY 2023 Surface Transportation Block Grant Program – Attributable (STBGP-A)
Total NWARPC Federal Funds Awarded to College Ave. $320,000

Dear Mayor Jordan:

I am pleased to inform you the Millsap Rd. & College Ave. Intersection and N. Hemlock Project was selected by the Northwest Arkansas Regional Planning Commission on August 24, 2022 for FFY 2023 STBGP-A funding. The STBGP-A funds awarded and the required local match are shown below:

NWARPC STBGP-A	**$320,000 (80% Federal)**
City Match	**$ 80,000 (20% Local Match)**
Total	**$400,000**

The STBGP-A funding is subject to an obligation limitation and the total available funds may change after final FFY 2023 funding is published.

These funds are required to be obligated by the end of the Federal Fiscal Year that ends on September 30, 2023. All required submittals to ARDOT and required approvals for this project should be completed by August 15, 2023 in order to allow sufficient time to obligate the STBGP-A funds for this project.

Please note that STBGP-A projects "...must comply with applicable provisions in Title 23, such as project agreements, authorization to proceed prior to incurring costs, prevailing wage rates (Davis-Bacon), competitive bidding, and other contracting requirements, regardless of whether the projects are located within the right-of-way of a Federal-aid highway."

Please let us know if you have any questions or need additional information regarding this program.

Sincerely,

Jeff Hawkins
Director

Cc: Mr. Chris Dillaha, ARDOT
Mr. Sunny Farmahan, ARDOT
Chris Brown, Public Works Director

Black Hills Energy

UTILITY WORK AGREEMENT
City of Fayetteville

Developer:	**City of Fayetteville**
Developer's Address:	**Fayetteville, AR**
Job Location:	**City of Fayetteville – Millsap Road and College Ave.** **BHEA Project Number 10089464** **Arkansas Highway Commission Project No. 040943**

This Utility Work Agreement ("Agreement") is made and entered into this ____ day of _____, **2025**, by and between **City of Fayetteville** (hereinafter referred to as "Developer"), and Black Hills Energy Arkansas, Inc. (hereinafter referred to as "Black Hills").

WHEREAS, Developer proposes to make certain improvements at the location designated above, and as a result of such improvements, Black Hills must adjust, enhance, locate, observe, and/or relocate certain of its existing facilities, or construct additional facilities; and

WHEREAS, in connection with Developer's proposed improvements, Developer wishes Black Hills to do the following:

Relocate natural gas assets to accommodate the planned intersection improvements at the Hwy 71B (North College Avenue) and Millsap Road in Fayetteville, AR. Planned improvements will include engineering design, surveying, easement acquisition, and construction and commissioning of the newly installed assets.

(hereinafter referred to as the "Work"); and

WHEREAS, such Work is shown in detail in Black Hills' plans, sketches, estimate of cost, and specifications (when applicable), which are attached to this Agreement and made a part hereof; and

WHEREAS, Developer agrees to pay for the cost of such Work to the extent herein agreed upon.

NOW, THEREFORE, IN CONSIDERATION OF THE PROMISES AND OTHER VALUABLE CONSIDERATION HEREIN ACKNOWLEDGED, DEVELOPER AND BLACK HILLS AGREE AS FOLLOWS:

1. Where applicable hereunder by reason of new utility occupancy or crossing of Developer's property, Developer hereby grants to Black Hills an easement or license to install and operate utility facilities on or across Developer's property as shown on the approved plans or sketch maps attached hereto and made a part hereof. Prior to Black Hills beginning the Work, Developer will, at no cost to Black Hills, furnish Black Hills with all necessary easements, rights of way and permits.

2. Where applicable hereunder by reason of new construction on existing utility rights of way, Black Hills hereby grants to Developer the right to use for Developer's purposes the lands within the limits of the improvement project limits on or across which Black Hills holds a valid property interest antedating Developer's rights which were subsequently acquired in the same lands, and which property rights Black Hills shall retain so long as Black Hills, its successors or assigns continues such use and occupancy and does not abandon, and thereby release, such property interest to Developer through removal of facilities in performing the Work or by subsequent removal of facilities for Black Hills' convenience; and Developer hereby agrees that Black Hills, by granting said right and by said continued joint use and occupancy, does not waive any future claim for reimbursement for any costs as may be eligible for reimbursement by reason of such prior property interest, nor does Black Hills waive any other legal or property right held under the laws or Constitution of the State of Arkansas or the United States.

3. In the event that future construction, reconstruction, expansion, relocation, rehabilitation, betterment, maintenance, or other work on the facilities owned and operated by either Developer or Black Hills in the area jointly occupied or used, under either or both Paragraphs 1 or 2 of this Agreement, will disturb, detrimentally affect, interfere, or be inconvenient to the facilities or responsibilities of either party, the parties hereto shall reach agreement in writing as to locations, extent, and methods of such work before the work is undertaken. In a case of emergency, and where immediate action is necessary for the protection of the public and to minimize damage to or loss of investment in the property of Developer or of Black Hills, either party hereto may, at its own responsibility and risk, make any necessary emergency repairs, and shall notify the other party hereto of such action as soon as practicable.

4. **The estimated cost of the Work is $302,040.00**. After it has completed the Work, Black Hills will bill Developer for the actual cost of the Work. Developer shall pay such invoice within 30 days of Developer's receipt of the invoice. If Developer fails to pay any such invoice within 30 days of receipt, the amount due under the invoice shall accrue interest at the rate of 10 per cent per annum until paid. The estimated and actual cost of the Work includes a tax gross up amount. The tax gross up amount will appear as a separate line item on Developer's bill. The tax gross up reimburses Company for

Company's federal and state income tax expense, on a net present value basis, associated with the collection of the cost of the Work from Developer. For refundable contributions, the same percentage rate is applied to refund the tax gross-up to Developer.

5. Black Hills will perform the Work, as described on the first page of this Agreement. Black Hills will endeavor to perform the Work within a reasonable time period, subject to applicable laws, rules and regulations of governmental authorities, and subject to any delay occasioned by lack of right of way, availability of materials and supplies, force majeure or events or conditions of whatsoever nature reasonably beyond Black Hills' control, and further conditioned upon the receipt of all required approvals and consents in form and substance acceptable to Black Hills. Black Hills shall not be obligated to commence the Work unless and until, at no cost to Black Hills, all necessary easements and rights of way have been executed, acknowledged and delivered to Black Hills in a form acceptable to Black Hills, but Black Hills shall not cause unreasonable delay in its acceptance of all easements and rights of way.

6. Title to and ownership of facilities which are the subject of the Work shall forever be and remain exclusively and unconditionally vested in Black Hills. Developer understands, acknowledges and agrees that Developer shall have no title to, interest in, or ownership of those facilities.

7. It is mutually agreed by the parties hereto that the provisions of this Agreement pertaining to property rights, right of way occupancy permission, access for servicing when applicable, and joint use of rights of way shall continue in full force and effect from the date of this Agreement, and shall be perpetually binding upon each party, and its representatives, successors and assigns.

8. Developer and Black Hills acknowledge that there are no agreements or understandings, either written or oral, between the parties related to the Work, other than as set forth in this Agreement, and that this Agreement (including any attachments hereto) contains the entire agreement between the parties regarding the Work.

9. This Agreement shall be governed in accordance with the laws of the State of Arkansas, the rules and regulations of the Arkansas Public Service Commission, and the Tariff of Black Hills. In the event of a conflict between this Agreement and any such laws, rules, regulations or Tariff, such laws, rules, regulations or Tariff shall control.

11. Developer acknowledges that it has been afforded an opportunity to have its attorney review and explain the terms of this Agreement.

IN WITNESS WHEREOF, the parties hereto have caused this Agreement to be executed in duplicate by their duly authorized representatives on the date stated above.

BLACK HILLS ENERGY ARKANSAS INC.

By: _____
Marc Eyre

Its: Vice President—AR / KS Operations

City of Fayetteville

By: _____

Its: _____

Federal UEI No.:

CITY OF FAYETTEVILLE ARKANSAS

CITY COUNCIL MEMO
2026-1873

MEETING OF JUNE 16, 2026

TO: Mayor Rawn and City Council

THROUGH: Keith Macedo, Chief of Staff
Chris Brown, Public Works Director
Alan Pugh, Stormwater Manager

FROM: Amanda Swope, Project Manager

SUBJECT: **Approval of a resolution to award RFQ 26-01, Selection #4 to Burns & McDonnell Engineering Co, Inc., Hawkins-Weir Engineers, Inc. and Olsson Associates, Inc. as providers based on qualifications and availability for on-call drainage design services as needed through June 30, 2027.**

RECOMMENDATION:
Staff recommends approval of a resolution to award RFQ 26-01, Selection #4 to Burns & McDonnell Engineering Co, Inc., Hawkins-Weir Engineers, Inc. and Olsson Associates, Inc. as providers based on qualifications and availability for on-call drainage design services as needed through June 30, 2027.

BACKGROUND:
On July 1, 2025, Council approved resolution 150-25 for on-call drainage design services in order to be responsive to the design needs of the stormwater division. This provided an expedited method to accomplish design work for repairs, maintenance and capital projects. This program has been successful in meeting those needs and staff proposes to continue it for an additional year.

DISCUSSION:
A selection committee selected Burns & McDonnell Engineering Co, Inc., Hawkins-Weir Engineers, Inc. and Olsson Associates, Inc. to be used for on-call drainage design services for various city projects until June 30, 2027.

BUDGET/STAFF IMPACT:
Funds for the drainage design will come from a Sales Tax Capital Improvements Fund, Drainage Bond Fund and the Stormwater Utility Program Fund.

ATTACHMENTS: 3. Staff Review Form, 4. RFQ 26-01, Selection 4 - Final Vote

113 West Mountain Street
Fayetteville, AR 72701
(479) 575-8323

File #: 2026-1873

A RESOLUTION TO AWARD RFQ #26-01 SELECTION #4 AND AUTHORIZE THE PURCHASE OF ON-CALL DRAINAGE DESIGN SERVICES FROM BURNS & MCDONNELL ENGINEERING CO, INC., HAWKINS-WEIR ENGINEERS, INC. AND OLSSON ASSOCIATES, INC. AS NEEDED THROUGH JUNE 30, 2027, WITHIN THE APPROVED BUDGET

BE IT RESOLVED BY THE CITY COUNCIL OF THE CITY OF FAYETTEVILLE, ARKANSAS:

Section 1: That the City Council of the City of Fayetteville, Arkansas hereby awards RFQ #26-01 Selection #4 and authorizes the purchase of on-call drainage design services from Burnes & McDonnell Engineering Co., Inc., Hawkins-Weir Engineers, Inc. and Olsson Associates, Inc. as needed through June 30, 2027, within the approved budget.

City of Fayetteville Staff Review Form

2026-1873

Item ID

6/16/2026

City Council Meeting Date - Agenda Item Only
N/A for Non-Agenda Item

Amanda Swope	5/20/2026	STORMWATER MANAGEMENT (740)
Submitted By	**Submitted Date**	**Division / Department**

Action Recommendation:

Approval of a resolution to award RFQ 26-01, Selection #4 to Burns & McDonnell Engineering Co, Inc., Hawkins-Weir Engineers, Inc. and Olsson Associates, Inc. as providers based on qualifications and availability for on-call drainage design services as needed through June 30, 2026.

Budget Impact:

Account Number	Fund
Project Number	Project Title

Budgeted Item?	No	Total Amended Budget	$	-
		Expenses (Actual+Encum)	$	-
		Available Budget	$	-
Does item have a direct cost?	No	Item Cost	$	-
Is a Budget Amendment attached?	No	Budget Amendment	$	-
		Remaining Budget	$	-

Purchase Order Number: _____ **Previous Ordinance or Resolution #** _____

Change Order Number: _____ **Approval Date:** _____

Original Contract Number: _____

Comments:

CITY OF FAYETTEVILLE ARKANSAS

SELECTION COMMITTEE - VOTING RESULTS

Selection Description: RFQ 26-01, Selection 4 - On-Call Drainage Design

Selection Committee Date/Time: 5/12/2026 at 11:00 AM via Zoom

	Firms are listed in alphabetical order		
	1	2	3
Overall RANK	**Burns & McDonnell Engineering Company, Inc**	**Hawkins-Weir Engineers, Inc**	**Olsson Associates**
1st	IIII	IIII	IIII
2nd			
3rd			

OVERALL RANK SUMMARY SCORING

1st ranked firm: BURNS & MCDONNELL, HAWKINS-WEIR, & OLSSON ALL PRIMARY

2nd ranked firm: _____

3rd ranked firm: _____

Tallied by:

K Fitch
Kenny Fitch, Sr. Procurement Agent
Date: 5 / 19 / 26

Trevel Young
Trevel Young, Procurement Agent
Date: 5 / 19 / 26

CITY OF FAYETTEVILLE ARKANSAS

CITY COUNCIL MEMO
2026-1962

MEETING OF JUNE 16, 2026

TO: Mayor Rawn and City Council

THROUGH: Chris Brown, Public Works Director

FROM: Justin Bland, City Engineer

SUBJECT: **Contract Amendment with Olsson for Railroad Crossing Elimination Grant Application Preparation**

RECOMMENDATION:
Staff recommends approval of contract Amendment #1 to the master agreement with Olsson in the amount of $25,000.00 for grant application services for the Railroad Crossing Elimination program that is offered by the Federal Railroad Administration.

BACKGROUND:
The Cities of Fayetteville and Springdale, in collaboration with Arkansas & Missouri Railroad, were awarded a 2022 Railroad Crossing Elimination (RCE) Grant with 80% funding for the study coming from the Federal Railroad Administration (FRA) and 20% of funding from local matches (Resolution #256-24). This $720,000 study focused on eight railroad crossings spanning a 14-mile rail corridor across both cities to identify individual solutions to the unique combinations of challenges and safety hazards at each crossing, all of which intersect with some of the busiest roads in Northwest Arkansas.

DISCUSSION:
This contract amendment will provide funding for Olssen to apply for a new RCE grant for implementation of the study results at two key locations in Fayetteville. These are at the University and Frisco railroad crossings. These improvements will address mobility and safety challenges, emergency vehicle access, transit connections, reliability of commercial transport via rail, and network resiliency for all forms of transport using intersecting roads.

BUDGET/STAFF IMPACT:
This contract amendment will increase the contract amount by $25,000 to $745,000. Funding for the preparation of this grant application will come from the Transportation Street Improvements Sales Tax Capital Improvement funding.

Description	Account	Project	Amount
Transportation Street Improv.	4470.800.8820-5314.00	06035.2024.2402	$25,000.00

ATTACHMENTS: 3. Staff Review Form, 4. NWA Rail Crossing RCE Amendment

113 West Mountain Street
Fayetteville, AR 72701
(479) 575-8323

File #: 2026-1962

A RESOLUTION TO APPROVE AMENDMENT NO. 1 TO THE CONTRACT WITH OLSSON, INC. IN THE AMOUNT OF $25,000.00 FOR GRANT APPLICATION SERVICES FOR THE RAILROAD CROSSING ELIMINATION PROGRAM

WHEREAS, on October 15, 2024, the City and Olsson, Inc. entered into an Agreement for professional engineering services for the Northwest Arkansas Corridor Safety Study; and

WHEREAS, the scope of the current contract does not include grant writing services, and the City now wishes to increase the scope of work to include grant writing services to apply for a U.S. Department of Transportation Railroad Crossing Elimination Grant to fund additional project delivery services and implementation.

NOW, THEREFORE, BE IT RESOLVED BY THE CITY COUNCIL OF THE CITY OF FAYETTEVILLE, ARKANSAS:

Section 1: That the City Council of the City of Fayetteville, Arkansas hereby authorizes Mayor Rawn to sign Amendment No. 1 with Olsson, Inc. in the amount of $25,000.00 for grant application services for the Railroad Crossing Elimination Program.

City of Fayetteville Staff Review Form

Item ID

6/16/2026

City Council Meeting Date - Agenda Item Only
N/A for Non-Agenda Item

Justin Bland	5/28/2026	ENGINEERING (621)
Submitted By	**Submitted Date**	**Division / Department**

Action Recommendation:

Staff recommends approval of contract Amendment #1 to the master agreement with Olsson in the amount of $25,000.00 for grant application services in the Railroad Crossing Elimination program

Budget Impact:

4470.800.8820-5314.00	Professional Services
Account Number	Fund
06035.2024.2402	Trans. Street Improv. - Grant Planning Assistance
Project Number	Project Title

Budgeted Item?	Yes	Total Amended Budget	$	45,100.00
		Expenses (Actual+Encum)		
		Available Budget	$	**45,100.00**
Does item have a direct cost?	Yes	Item Cost	$	25,000.00
Is a Budget Amendment attached?	No	Budget Amendment	$	-
		Remaining Budget	$	**20,100.00**

Purchase Order Number: _____

Previous Ordinance or Resolution # 256-24

Change Order Number: _____

Approval Date: _____

Original Contract Number: _____

Comments:

AMENDMENT NO. 1
To
CONTRACT FOR PROFESSIONAL ENGINEERING SERVICES
FOR THE NORTHWEST ARKANSAS CORRIDOR SAFETY STUDY
Between
CITY OF FAYETTEVILLE, ARKANSAS
And
OLSSON, Inc.

WHEREAS, on October 15, 2024, the City of Fayetteville, Arkansas (CITY OF FAYETTEVILLE) and Olsson, Inc. of Fayetteville, Arkansas (ENGINEER) entered into an Agreement for professional engineering services for the Northwest Arkansas Corridor Safety Study (the "Project"); and

WHEREAS, the scope of the current contract does not include grant writing services, and the CITY OF FAYETTEVILLE now wishes to increase the scope of work to include grant writing services; and

WHEREAS, the CITY OF FAYETTEVILLE has requested grant writing services to apply for a U.S. Department of Transportation Railroad Crossing Elimination Grant to fund additional project delivery services and implementation; and

WHEREAS, the current Agreement must now be amended to provide the additional scope and amount of compensation to the ENGINEER for the additional work; and

NOW THEREFORE, in consideration of the mutual covenants and Agreements herein contained, CITY OF FAYETTEVILLE and the ENGINEER, the parties hereto, stipulate and agree that the Contract for Professional Engineering Services dated October 15, 2024, is hereby amended in the following particulars:

SECTION 5 – PAYMENTS TO ENGINEER

Delete the first sentence of Section 5.1 and replace with the following:

a. The maximum not-to-exceed amount authorized for this Agreement is **$745,000.00**.

For clarification, Amendment No. 1 increases the total project fee by $25,000.00.

APPENDIX A – SCOPE OF SERVICES

The additional Scope of Services is included in Appendix A attached hereto and made part of this Agreement.

All other provisions of the original Agreement remain in full force and effect

IN WITNESS WHEREOF, CITY OF FAYETTEVILLE, ARKANSAS by and through its Mayor, and ENGINEER, by its authorized officer have caused this Amendment to be duly executed this _____ day of _____, 2026.

CITY OF FAYETTEVILLE, ARKANSAS	OLSSON, INC.
By:_____	By:
Mayor, Molly Rawn	Andrew S. Brewer, P.E.
ATTEST:	
By:_____	Title: Vice President
City Clerk	

END OF AMENDMENT NO. 1 TO
CONTRACT FOR PROFESSIONAL ENGINEERING SERVICES

Appendix A
Railroad Crossing Elimination (RCE) Grant Writing

Scope of Work for Grant Writing

1. Project Management

- Project Start Date – April 27, 2026
- Project End Date – No later than the deadline stipulated in the NOFO

2. Grant Writing

USDOT Railroad Crossing Elimination Grant

Objective: To develop a complete RCE grant application for railroad crossing improvements at University Avenue (Fayetteville), Frisco Avenue (Fayetteville), and County Line Road (Springdale). The project scope includes project development and construction activities for implementation such as preliminary and final design, geotechnical studies, environmental studies, NEPA documentation, utility coordination, right-of-way plans and easement documents, acquisition related services, and construction related services. Project will be in coordination with City of Fayetteville, City of Springdale, and A&M Railroad.

Scope of Work

Communication and Project Management:

- Weekly check-in with City's project lead(s) following initial kick-off meeting.

Grant Application Development:

- Develop a complete application in compliance with the upcoming RCE NOFO.

Compensation:

Client shall pay to Olsson for the performance of the Scope of Services, the actual time of personnel performing such services in accordance with the Labor Billing Rate Schedule(s), and all actual reimbursable expenses in accordance with the Reimbursable Expense Schedule attached to this agreement. Olsson shall submit invoices on a monthly basis, and payment is due within 30 calendar days of invoice date.

Olsson's Scope of Services will be provided on a time-and-expense basis not to exceed $25,000.

Suite 310 / 3537 North Steele Blvd. / Fayetteville, AR 72703
O 479.443.3404 / **olsson.com**

2026 Olsson Billing Rate Schedule

Description	Range		
Principal	$156.00	-	$486.00
Project Manager	$136.00	-	$294.00
Project Professional	$101.00	-	$258.00
Assistant Professional	$76.00	-	$187.00
Designer	$109.00	-	$238.00
CAD Operator	$66.00	-	$232.00
Survey	$61.00	-	$230.00 *
Construction Services	$56.00	-	$305.00 *
Administrative/Clerical	$51.00	-	$266.00

Note:

1. Special Services not included in above categories will be provided on a Special Labor Rate Schedule
2. Rates subject to change based upon updates to Billing Rates for upcoming year.

CITY OF FAYETTEVILLE ARKANSAS

CITY COUNCIL MEMO
2026-1969

MEETING OF JUNE 16, 2026

TO: Mayor Rawn and City Council

THROUGH: Keith Macedo, Chief of Staff
Chris Brown, Public Works Director

FROM: Byron Humphry, Director of Park Operations and Facilities

SUBJECT: **INCREASE APPROVED FUNDS AVAILABLE FOR ELEVATOR MODERNIZATION PROJECT WITH OTIS ELEVATOR TO INCLUDE SALES TAX AND ADDITIONAL PROJECT CONTINGENCY**

RECOMMENDATION:
Staff recommends approval to increase the approved funds available for the Elevator Modernization Project with Otis Elevator to include applicable sales tax in the amount of $12,659.40 and to increase the project contingency funds by $7,016 for a total project contingency of $20,000.

BACKGROUND:
On March 5, 2026, City Council passed resolution 67-26 to authorize a contract with Otis Elevator for major modernization of the elevator in City Hall in the amount of $129,840, pursuant to an Omnia Partners Cooperative purchasing contract and to approve a project contingency in the amount of $12,984.

DISCUSSION:
This project is subject to sales tax and was not included in the original approval. This request will add funds to allow for sales tax in the amount of $12,659.40.
The modernization of the elevator will necessitate the elevator to be out of service for approximately 1 month. Given the age of the City Hall building and the elevator, unexpected issues could occur in the project that necessitates a change order. Given the urgency to complete the modernization project and the associated accommodation that will need to be made without the use of an elevator, additional contingency is requested to expediate any unanticipated change orders. The current approved contingency is $12,984. This resolution will increase the project contingency by $7,016, for a total of $20,000.

BUDGET/STAFF IMPACT:
This project is funded by Sales Tax Capital Improvement funds.

ATTACHMENTS: 3. Staff Review Form, 4. Resolution 067-26

113 West Mountain Street
Fayetteville, AR 72701
(479) 575-8323

File #: 2026-1969

A RESOLUTION TO AMEND RESOLUTION 67-26 FOR THE CITY HALL ELEVATOR CONTRACT WITH OTIS ELEVATOR TO PROVIDE FOR THE PAYMENT OF SALES TAXES, AND TO INCREASE THE PROJECT CONTINGENCY TO $20,000.00

WHEREAS, on March 5, 2026 City Council passed Resolution 67-26 that authorized a contract with Otis Elevator in the amount of $129,840.00 and a project contingency in the amount of $12,984.00; and

WHEREAS, the Resolution needs to be amended to provide for the payment of sales taxes and staff also recommend increasing the project contingency to $20,000.00.

NOW, THEREFORE, BE IT RESOLVED BY THE CITY COUNCIL OF THE CITY OF FAYETTEVILLE, ARKANSAS:

Section 1: That the City Council of the City of Fayetteville, Arkansas hereby amends Resolution 67-26 for the City Hall Elevator contract with Otis Elevator to provide for the payment of sales taxes in the amount of $12,659.40, and further increases the project contingency to $20,000.00

City of Fayetteville Staff Review Form

2026-1969

Item ID

6/16/2026

City Council Meeting Date - Agenda Item Only

N/A for Non-Agenda Item

Byron Humphry	5/28/2026	FACILITIES MANAGEMENT (140)
Submitted By	**Submitted Date**	**Division / Department**

Action Recommendation:

Staff recommends approval of funds for applicable sales tax on this project in the amount of $12,659.40 and to increase the project contingency funds by $7,016 for a total project contingency of $20,000.

Budget Impact:

4470.140.8900-5400.00	Sales Tax Capital Improvements
Account Number	Fund
02046.1	Building Improvements
Project Number	Project Title

Budgeted Item?	Yes	Total Amended Budget	$	810,081.00
		Expenses (Actual+Encum)	$	403,907.54
		Available Budget	**$**	**406,173.46**
Does item have a direct cost?	Yes	Item Cost	$	19,675.40
Is a Budget Amendment attached?	No	Budget Amendment	$	-
		Remaining Budget	**$**	**386,498.06**

Purchase Order Number: 2026-426

Previous Ordinance or Resolution # 67-26

Change Order Number:

Approval Date:

Original Contract Number: 2026-20

Comments:

113 West Mountain Street
Fayetteville, AR 72701
(479) 575-8323

Resolution: 67-26

File Number: 2026-383

A RESOLUTION TO WAIVE COMPETITIVE BIDDING AND AUTHORIZE A CONTRACT WITH OTIS ELEVATOR FOR MAJOR MODERNIZATION OF THE ELEVATOR IN CITY HALL IN THE AMOUNT OF $129,840.00, PURSUANT TO AN OMNIA PARTNERS COOPERATIVE PURCHASING CONTRACT, AND TO APPROVE A PROJECT CONTINGENCY IN THE AMOUNT OF $12,984.00

WHEREAS, the elevator in City Hall has been in operation for more than 40 years without significant investment in updated mechanical and safety improvements; and

WHEREAS, this modernization will bring the elevator into conformance with current building code requirements, replace critical obsolete and unavailable parts, and improve reliability; and

WHEREAS, the elevator will be out of service for approximately 30 days through this process, during which time the upper floors will be accessible through the stairs and any necessary accommodations will be made.

NOW, THEREFORE, BE IT RESOLVED BY THE CITY COUNCIL OF THE CITY OF FAYETTEVILLE, ARKANSAS:

Section 1: That the City Council of the City of Fayetteville, Arkansas hereby authorizes a contract with OTIS Elevator for major modernization of the elevator in City Hall in the amount of $129,840.00, pursuant to an Omnia Partners cooperative purchasing contract, and further approves a project contingency in the amount of $12,984.00.

PASSED and APPROVED on March 5, 2026

Approved:

Molly Rawn

Molly Rawn, Mayor

Attest:

Kara Paxton

Kara Paxton, City Clerk Treasurer

CITY CLERK TREASURER CITY OF FAYETTEVILLE ARKANSAS WASHINGTON COUNTY

CITY OF FAYETTEVILLE ARKANSAS

CITY COUNCIL MEMO
2026-383

MEETING OF MARCH 5, 2026

TO: Mayor Rawn and City Council

THROUGH: Byron Humphry, Director of Park Operations and Facilities
Chris Brown, Public Works Director
Keith Macedo, Chief of Staff

FROM: Quin Thompson, Facilities & Bldg Maint Manager

SUBJECT: **APPROVAL OF A CONTRACT FOR ELEVATOR MODERNIZATION**

RECOMMENDATION:
Staff recommends approval of a contract with OTIS Elevator for major modernization of the elevator in City Hall at a cost of $129,840.00, pursuant to an Omnia Partners purchasing agreement, with an owner contingency of $12,984.00.

BACKGROUND:
The elevator has been in operation for more than 40 years without significant investment in updated mechanical and safety improvements.

DISCUSSION:
The Elevator is a key component of the Accessible Route for citizens and staff with mobility impairments. The proposed project will bring the elevator into conformance with current building code requirements, replace critical obsolete and unavailable parts, and improve reliability. Lighting and finishes will also be improved as a part of this project.

The elevator will be out of service for approximately 30 days through this process, during which time the upper floors will be accessible through the stairs.

In addition to utilizing Omnia Partners contract #2019.001563, replacement parts and labor for repairs of machinery and equipment is an exempt commodity from bidding, per A.C.A. § 14-58-104.

BUDGET/STAFF IMPACT:
This project is funded by Sales Tax Capital Improvement funds.

ATTACHMENTS: 3. Staff Review Form, 4. Fayetteville City Hall - Elevator Mod Signed - With Strikethroughs as Approved by Otis, 5. Otis Elevator Contract Change - Addendum Signed

113 West Mountain Street
Fayetteville, AR 72701
(479) 575-8323

File #: 2026-383

A RESOLUTION TO WAIVE COMPETITIVE BIDDING AND AUTHORIZE A CONTRACT WITH OTIS ELEVATOR FOR MAJOR MODERNIZATION OF THE ELEVATOR IN CITY HALL IN THE AMOUNT OF $129,840.00, PURSUANT TO AN OMNIA PARTNERS COOPERATIVE PURCHASING CONTRACT, AND TO APPROVE A PROJECT CONTINGENCY IN THE AMOUNT OF $12,984.00

WHEREAS, the elevator in City Hall has been in operation for more than 40 years without significant investment in updated mechanical and safety improvements; and

WHEREAS, this modernization will bring the elevator into conformance with current building code requirements, replace critical obsolete and unavailable parts, and improve reliability; and

WHEREAS, the elevator will be out of service for approximately 30 days through this process, during which time the upper floors will be accessible through the stairs and any necessary accommodations will be made.

NOW, THEREFORE, BE IT RESOLVED BY THE CITY COUNCIL OF THE CITY OF FAYETTEVILLE, ARKANSAS:

Section 1: That the City Council of the City of Fayetteville, Arkansas hereby authorizes a contract with OTIS Elevator for major modernization of the elevator in City Hall in the amount of $129,840.00, pursuant to an Omnia Partners cooperative purchasing contract, and further approves a project contingency in the amount of $12,984.00.

City of Fayetteville Staff Review Form

2026-383

Item ID

3/17/2026

City Council Meeting Date - Agenda Item Only
N/A for Non-Agenda Item

Quin Thompson	2/24/2026	FACILITIES MANAGEMENT (140)
Submitted By	**Submitted Date**	**Division / Department**

Action Recommendation:

Staff recommends approval of a contract with OTIS Elevator for major modernization of the elevator in City Hall at a cost of $129,840.00, pursuant to an Omnia Partners purchasing agreement, with an owner contingency of $12,984.00.

Budget Impact:

4470.140.8900-5400.00	Sales Tax Capital Improvements
Account Number	Fund
02046.1	Building Improvements
Project Number	Project Title

Budgeted Item?	Yes	Total Amended Budget	$	861,540.00
		Expenses (Actual+Encum)	$	94,996.29
		Available Budget	$	**766,543.71**
Does item have a direct cost?	Yes	Item Cost	$	142,824.00
Is a Budget Adjustment attached?	No	Budget Adjustment	$	-
		Remaining Budget	$	**623,719.71**

V20221130

Purchase Order Number:

Previous Ordinance or Resolution #

Change Order Number:

Approval Date:

Original Contract Number:

Comments:

OTIS

HydroFit™ MOD

Otis HydroFit™ MOD Hydraulic Control System

2/23/2026

CUSTOMER NAME
Fayetteville City Hall

Otis Elevator Company
1419 Westpark Dr.Suite F
Little Rock, Arkansas, 72204

PROJECT LOCATION
113 W Mountain St
Fayetteville, Arkansas, 72701

PROPOSAL NUMBER
F7SE1811/01

We propose to furnish labor and material to provide a microprocessor based HydroFit MOD control system. It is a digital closed-loop microprocessor-based control system specifically designed to meet the particular needs of modernizing hydraulic elevators.

This proposal described herein, will be operating under the Omnia Partners purchasing agreement #2019.001563, the terms and conditions will be tied to the Omnia Master Agreement.

© OTIS ELEVATOR COMPANY, 2026 All Rights Reserved

Section 1

UNITS

DUTY

The present capacity and speed of the elevators will be retained as follows:

Group 1

MACHINE #	CAPACITY (Pounds)	SPEED (Feet per Minute)
Unit 1	2500	125

TRAVEL, STOPS & OPENINGS

The present travel, stops and openings of the elevators will be retained as follows:

Group 1

Unit 1

LANDINGS	OPENINGS		Distance Between Floors
	Front	Rear	
4	Yes	No	0 ft 0 in 0
3	Yes	No	12 ft 0 in 0
2	Yes	No	12 ft 0 in 0
1	Yes	No	12 ft 0 in 0

© OTIS ELEVATOR COMPANY, 2026 All Rights Reserved

Section 2

OPERATION

NEW AUTOMATIC SELF-LEVELING

The elevator shall be provided with automatic self-leveling that shall typically bring the elevator car level with the floor landings + ¼" regardless of direction of travel. The automatic self-leveling shall correct for over travel or under travel and rope stretch.

NEW SPECIAL EMERGENCY SERVICE

Special Emergency Service operation shall be provided in compliance with the latest applicable revision of the ASME/ANSI A17.1 Code.

Special Emergency Service Phase I to return the elevator(s) non-stop to a designated floor shall be initiated by an elevator smoke detector system or a keyswitch provided in a lobby fixture.

The smoke detector system, if required, is to be furnished by others. The elevator contractor shall provide contacts on the elevator controller to receive signals from the smoke detector system.

A keyswitch in the car shall be provided for in-car control of each elevator when on Phase II of Special Emergency Service.

If an elevator is on independent service when the elevators are recalled on Phase I operation, a buzzer shall sound in the car and a jewel shall be illuminated, subject to applicable codes.

NEW INDEPENDENT SERVICE

When the Independent Service switch in the car operating panel is actuated; it shall cancel previously registered car calls, disconnect the elevator from the hall buttons, and allow operation from the car buttons only. Door operation shall occur only after actuation of the "DOOR CLOSE" button.

NEW INSPECTION OPERATION

For inspection purposes, an enabling keyswitch shall be provided in the car operating panel to permit operation of the elevator from on top of the car and to make car and hall buttons inoperative.

HOISTWAY ACCESS SWITCHES

An enabling keyswitch shall be provided in the car operating panel to render all car and hall buttons inoperative and to permit operation of the elevator by means of an access keyswitch adjacent to the hoistway entrance at the access landing.

OTIS ONE PLATFORM

Otis ONE is an internet of things (IoT) platform that enables advanced monitoring, big data analytics, and predictive maintenance to address potential issues before they occur, increasing elevator uptime and reducing service disruptions. Activation of these features is subject to execution of a separate Otis ONE

© OTIS ELEVATOR COMPANY, 2026 All Rights Reserved

license and subscription agreement and additional annual subscription fee which is not included in this Contract. Further, the Otis One hardware / equipment shall remain the property of Otis.

Optional Otis ONE Subscription

Otis ONE Prime Subscription Features

- IoT connection with continuous elevator data collection
- Monitoring by mechanics and OTISLINE
- Automated performance diagnostics and data analytics
- Over-the-air IoT software updates
- Otis Customer Portal access
- Real-time elevator status
- Performance & usage dashboards
- Service activity detail

Section 3

MACHINE ROOM EQUIPMENT

POWER SUPPLY

The power supply of 240V_60HZ, alternating current will be retained with the new equipment arranged for this power supply.

NEW CONTROLLER

A microprocessor based HydroFit MOD control system shall be provided to perform all the functions of safe elevator motion and elevator door control. This shall include all the hardware required to connect, transfer and interrupt power, and protect the motor against overloading. The system shall also perform group operational control.

NEW SOFT STARTER

A new solid-state starter will be provided.

NEW PUMP MOTOR

The existing motor will be replaced.

POWER UNIT

NEW SUBMERSIBLE

The existing power unit will be replaced with a new power unit. The new power unit consists of a positive displacement pump, motor, integral 4-coil control valve, oil tank and muffler. The pump and motor are submerged and are mounted to the tank with rubber isolators to reduce vibration and noise.

© OTIS ELEVATOR COMPANY, 2026 All Rights Reserved

NEW VALVE
A new integral 4-coil control valve will be installed to replace the existing valve. The valve consists of up, up leveling, down and down leveling controls along with manual lowering and a pressure relief valve.

Section 4

DOOR EQUIPMENT

NEW CLOSED LOOP DOOR OPERATOR
Install a new closed loop door operator. Car and hoist way doors shall be power operated by means of a closed loop door operator mounted on top of the car designed to give consistent door performance with changes in temperature, wind or minor obstruction in the door track. The system continually monitors door speed and position and adjusts it accordingly to match the pre-determined profile.

NEW DOOR-PROTECTION DEVICE
Install a new solid state, infrared passenger protection device on the car door. Elevator doors shall be provided with a reopening device that will stop and reopen the car door(s) and hoistway door(s) automatically should the door(s) become obstructed by an object or person.

NEW INTERLOCKS
New interlocks will be installed. The interlocks shall prevent operation of the elevator unless all doors for that elevator are closed and shall maintain the doors in their closed position while the elevator is away from the landing.

RETAIN CAR DOOR TRACKS AND HANGERS
The present car door tracks and hangers shall be retained and inspected for proper alignment. Any adjustment required will be accomplished.

RETAIN HOISTWAY ENTRANCES
The present hoistway entrances will be retained.

RETAIN HOISTWAY DOOR TRACKS AND HANGERS
The present hoistway door tracks and hangers shall be retained.

NEW HOISTWAY DOOR RESTRICTORS
Folding hoistway door restrictors shall be installed.

© OTIS ELEVATOR COMPANY, 2026 All Rights Reserved

Section 5

HOISTWAY EQUIPMENT

RETAIN HOISTWAY OPERATING DEVICES
The existing hoistway operating devices shall be retained.

RETAIN CAR GUIDES
The existing car guides shall be retained.

RETAIN CAR INTERIOR
The present car interior shall be retained.

RETAIN FLOORING
The present flooring will be retained.

NEW PIT SWITCH
An emergency stop switch shall be located in the pit accessible from the pit access door.

RETAIN SPRING BUFFERS
The existing spring buffers shall be retained.

NEW ACCESS ALERT HOISTWAY SAFETY DEVICE
We will furnish and install all the necessary components, circuitry and wiring for a new Access Alert system, which will operate on the elevator car top and pit.

Access Alert will be installed so the elevator can be controlled in a safe manner when an authorized person accesses the elevator hoistway. The Access Alert system meets all applicable safety codes.

This groundbreaking new product, Access Alert, is specifically designed to:

- Prevent work on top of the elevator without the top of car inspection station engaged properly.
- Prevents moving the elevator on inspection while personnel are in a potentially unsafe position.
- Prevent working in the elevator pit, while the pit stop switch is not engaged properly.
- Meet applicable building and elevator codes.

Similar to the seatbelt alarm in your car, Access Alert provides a constant, noticeable reminder to anyone accessing the hoistway that they need to engage the stop switch before starting

© OTIS ELEVATOR COMPANY, 2026 All Rights Reserved

work. We believe the simplicity, ease of installation, and cost-effectiveness of this product will be an important way for you to invest in improving safety inside your facility.

Section 6

CAR FIXTURES

NEW APPLIED CAR OPERATING PANEL

An applied car operating panel shall be furnished. The panel shall contain a bank of mechanical illuminated buttons marked to correspond with the landings served, an emergency call button, emergency stop button, door open and door close buttons and a light switch. All buttons, when applicable, to be long life LED illumination. This panel shall be equipped with a button that shall initiate two-way communication between the car and a location inside the building, switching over to another location if call is unanswered. Otis will provide our standard, code compliant, applied fixtures in a brushed stainless-steel finish. If a specific fixture design or configuration is requested, you agree to notify Otis upon execution of this agreement. Design modifications may lead to additional costs based on final selection.

NEW EMERGENCY CAR LIGHTING

An emergency power unit employing a 6-volt sealed rechargeable battery and totally static circuit shall be provided. The power unit shall illuminate the elevator car and provide current to the alarm bell in the event of normal power failure. The equipment shall comply with the requirements of the latest applicable revision of the ASME/ANSI A17.1 Code.

NEW CAR POSITION INDICATOR

A car position indicator shall be installed. The position of the car in the hoistway shall be shown by illumination of the indication corresponding to the landing at which the car is stopped or passing.

NEW "IN-CAR" DIRECTION LANTERNS

Direction lantern(s) shall be mounted in car entrance jamb(s), visible from the corridor, which when the car stops and the doors are opening shall indicate the direction the car is traveling. A chime shall also be furnished on the car that will sound once for the “UP” direction and twice for the “DOWN” direction as the doors are opening.

© OTIS ELEVATOR COMPANY, 2026 All Rights Reserved

Section 7

HALL FIXTURES

NEW HALL BUTTONS
New hall buttons shall be installed at each landing. An up button and a down button at each intermediate landing and a single button at each terminal landing shall be installed. All buttons, when applicable, shall be long-life LED illumination. Otis will provide our standard, code compliant, applied fixtures in a brushed stainless-steel finish. If a specific fixture design or configuration is requested, you agree to notify Otis upon execution of this agreement. Design modifications may lead to additional costs based on final selection.

Section 8

HEALTH PRODUCTS

No Health Products Specified

© OTIS ELEVATOR COMPANY, 2026 All Rights Reserved

Section 9

WORK BY OTHERS – NOT IN CONTRACT

The following items must be performed by others and you agree to provide this work in accordance with the applicable codes and enforcing authorities:

WORK BY OTHERS SCHEDULING

All "Work by Others" must either be completed prior to our manning the job or be properly scheduled as to not obstruct the progress of the project.

AIR CONDITIONING

Provide suitable ventilation and cooling equipment, if required, to maintain the machine-room temperature between 60°F and 100°F. The relative humidity should not exceed 95 percent non-condensing.

BUILDING POWER

Provide electrical power for light, tools, hoists, etc. during installation as well as electric current for starting, testing, and adjusting the elevator. Power of permanent characteristics to be provided to properly operate all the elevators concurrently scheduled to be modernized. Power must be a 3-phase 4 wire system with ground and bonded disconnects. Grounded leg delta systems are not acceptable.

SMOKE AND HEAT SYSTEM

Provide elevator lobby, machine room and hoistway smoke detecting devices located as required and wired from the fire control center to a controller in the machine room. Hoistway devices are required to be made accessible from outside the elevator hoistway. Coordinate signal connections and necessary testing with the Elevator Contractor. Provide the following zones and locate signal circuits in a properly labeled junction box in the machine room:

Main Floor Recall: Provide one set of normally closed contacts that will open when any smoke sensor related to the elevators at the designated main landing senses smoke. This excludes other devices located in the machine room, hoistway or main egress floor.

Alternate Floor Recall: Provide one set of normally closed contacts that will open when the smoke sensor at the main egress floor senses smoke.

Machine Room/Hoistway Recall: Provide one set of normally closed contacts that will open when any smoke sensor located in the machine room or hoistway/pit senses smoke.

SPRINKLERS

Provide code compliant sprinkler system, as required, in the hoistway, pit and machine room. If sprinklers are being installed or altered in the hoistway(s), pit or the machine rooms, a means must be provided to disconnect three-phase power before water is applied. This is usually accomplished with a shunt trip breaker that must be located outside the elevator machine room. The shunt trip breaker may be activated by heat detectors located within 24" of the sprinkler heads and arranged to trip at a lower temperature than the sprinkler heads. A heat detector is not required in the pit if the sprinkler head is within

© OTIS ELEVATOR COMPANY, 2026 All Rights Reserved

24" of the pit floor. Heat and smoke devices in elevator hoistways must be installed with UL rated and lockable panels that are accessible for servicing from outside the hoistway. The panel interiors are to be guarded using a minimum 13 gauge metal with a pattern of maximum ¾ inch holes.

CUTTING AND PATCHING

Do any cutting, (including cutouts to accommodate hall signal fixtures, entrances and/or machine room access) patching and painting of walls, floors or partitions.

MAIN DISCONNECT

Provide a fused lockable disconnect switch or circuit breaker for each elevator per the National Electrical Code with feeder or branch wiring to the transformer. Size to suit elevator contractor. Provide a SHUNT TRIP disconnect, as required, if sprinklers are being provided. Provide suitable connections from the main disconnect to the elevator control equipment.

Electrical Feeder system to limit available short circuit to not more than 10k amps at the load side of the elevator main line disconnect.

GROUND WIRE

Provide a properly sized ground wire from the elevator controller(s) to the primary building ground.

EMERGENCY COMMUNICATIONS – Phone Only

Provide a continuously monitored phone line terminating at Otis controller.

GFCI OUTLETS

Provide 120volt GFCI type convenience outlets in the machine room and in each pit. . Provide additional non-GFCI outlet in each pit for use by sump pump. Pits subject to sprinklers shall have NEMA 4 rated fixtures if located below 48" above pit floor.

CAR LIGHT POWER SUPPLY AND DISCONNECT

For each car provide a 120 volt AC, 15 amp, single-phase power supply with fused disconnect switch (or circuit breaker) capable of being locked in the open (off) position with feeder wiring to each controller located in the machine room.

REMOTE PANELS

Provide required conduit, with adequate pull boxes and ells from the elevator hoistway(s) to the location or locations required to facilitate the installation of Lobby Panels, Fire Control Room Panels or Elevator Monitoring Systems. Size and number as specified by Otis. Leave a measured pull tape in the conduit. Otis to furnish and pull required conductors.

EMERGENCY (STANDBY) POWER

If emergency power is available, verify and provide the following:

a. Power that meets the load characteristic requirements of the new control system. Power that is capable of operating and providing sufficient power to non-linear elevator loads and that is capable of absorbing regenerated power resulting from running elevators with overhauling loads.

b. Two conductors to the machine room from a normally closed auxiliary contact on the Owner's EP transfer switch. Contacts to open when power transfers to the emergency source.

© OTIS ELEVATOR COMPANY, 2026 All Rights Reserved

c. Two additional conductors to the machine room from an adjustable timed relay on the Owner's EP transfer switch to indicate "request to transfer" from standby to normal power.

d. Power for 115VAC circuits that supply elevator cab lights, cab fan, communication means, EMS, Lobby Panels, and Compass dispatching systems (if applicable).

e. Power for machine room lighting, ventilation and cooling means.

LIGHTING

Provide sufficient lighting in the buildings common areas to facilitate a safe working environment. Provide new or modify machine room lighting to provide a minimum of 19 ft. candles of illumination and new pit lighting to provide a minimum of 10ft. candles of illumination. The machine room light switch shall be located within 18" of the lock-set side of the entry door. Pit light switches shall be adjacent to the pit ladder and a minimum of 24" above the threshold level. Lighting must have code compliant guards of either grounded metal, plastic or comparable. Pits subject to sprinklers shall have NEMA 4 rated fixtures.

PROJECT BEING "DRIED-IN"

Work, as required, to keep the elevator lobbies, hoistway, machine room and storage area "dried-in" for the entire length of the project.

MACHINE ROOM ACCESS

Provide a self-locking and self-closing door for the elevator machine room. Access door to be adequately sized to accept our equipment. Modify machine room access, as required, to comply with code and facilitate safe egress of all equipment.

FIRE EXTINGUISHER

Provide fire extinguisher in elevator machine room.

NON-ELEVATOR MATERIAL IN HOISTWAY

Remove or encapsulate, as required, any non-elevator related pipes or wiring located in the elevator machine room or hoistway.

HOISTWAY VENTILATION

Provide code compliant hoistway ventilation. Code requires a means to prevent the accumulation of hot air and gasses at the top of the hoistway. Pressurizing the hoistways, or providing vents from the top of the hoistway to the outside of the building usually accomplishes this. Vents shall not be less than 3 1/2% of the area of the hoistway nor less than 3 sq. ft. for each elevator car, whichever is greater. You may not vent the hoistway to the machine room. If the hoistway vents must run through the machine room, they must be enclosed in a fire rated structure and not violate clearances around our equipment.

HOISTWAY LEDGES

Provide a 75o angle constructed of a non-combustible material on all ledges that are 2" greater in the hoistway, excluding multi-hatch divider beams.

SUMP HOLE GRATING

Provide a flush grating over the sump hole located in the elevator pit.

STORAGE

© OTIS ELEVATOR COMPANY, 2026 All Rights Reserved

Provide dry, protected and secure storage space adjacent to the hoistway(s). Otis shall be compensated for material delivered that is stolen or removed from the jobsite.

DISPOSAL

The disposal of removed elevator components; machines, controllers, ropes, hydraulic fluid, oils, buffers and packing materials from the new equipment and any and all related materials shall be the sole responsibility of the Customer or owner. If a dumpster is provided on site, we will deposit waste materials in the dumpster or at an agreed upon on-site location for removal by the Customer or owner.

PIT LADDERS

Provide a pit ladder, as required, in each pit that does not have walk-in access doors. Ladder shall extend 48" above first landing access door.

OPERATING ELEVATORS FOR OTHER TRADES

If we are required to operate an elevator to facilitate the work of other trades (e.g., sprinklers, smoke sensors, ledges, etc.) then we shall be compensated for this lost time and the project schedule shall also be modified.

ADDITIONAL STOPS/OPENINGS

Extend the existing hoistways and add additional landing(s) and new machine room. Hoistway and machine room shall be constructed in accordance with applicable building codes and ANSI A17.1.

- Ledges over 2" wide shall have a 75° bevel on top. (Except separator beams) Hoistway shall be fire rated and may require patching of holes. No other pipes or electrical conduit not associated with the elevator equipment are allowed in the hoistway. Power feeders may not run up the hoistway, except by special permission of the governing authority, and shall not contain splices or junction boxes in the hoistway.
- Provide crane to bring new material and removal of the machine room equipment to new machine room.
- Provide temporary roof as required to provide continuously dry hoistways and machine rooms.
- Perform all demolition of old machine room slab and structure. Protect existing elevator cars and equipment from demolition damage, dust and debris.
- Supply new machine beams and beam supports per reactions supplied by Otis.
- Provide new machine room slab to suit reactions. Remove any construction forms, scaffold or decking from hoistway not placed by Otis. Cut and patch hoistways as required to provide a legal hoistway.
- Provide, maintain and remove any temporary barricades per OSHA or local authority requirements and furnish barricades to protect the public from access to construction areas.
- Supply and install adequate support for guide rail fastening, including separator beams where required.
- Provide adequate fastening for hoistway entrances and sills.
- Provide finished floor elevation reference height at time of installation of new entrance sills.
- Provide legal access to new machine room (and temporary access per OSHA requirements during construction).

© OTIS ELEVATOR COMPANY, 2026 All Rights Reserved

- Grout or finish blocking of new entrances to provide a fire rated enclosure.
- Provide hoist beams over each elevator hoistway in machine room rated to hoist elevator machines.
- Finish painting of new hoistway entrances shall be by others, if prime entrances are selected.

EMERGENCY RETURN UNIT (ERU)

If an ERU battery-operated lowering device is being provided with your hydraulic elevator modernization than others are to provide an auxiliary contact in either the existing lockable disconnect (if currently code compliant) or in a new code compliant lockable disconnect.

ASBESTOS

Should any asbestos be found to be present in the building which is related to any of our work, it shall be the responsibility of others to monitor, abate, contain or prepare the workplace as safe for our employees to work within or about. Otis will not be responsible for working with asbestos which may be disturbed or uncontained. Otis will not be responsible for any costs associated with delay of the job should asbestos be detected or require addressing by others for us to proceed. This includes but is not limited to re-mobilization charges which may be applied.

HAZARDOUS MATERIALS

You agree to notify Otis if you are aware or become aware prior to the completion of the work of the existence of asbestos or other hazardous material in any elevator hoistway, machine room, hallway or other place in the building where Otis' personnel are or may be required to perform their work. In the event it should become necessary to abate, encapsulate or remove asbestos or other hazardous material from the building, you agree to be responsible for such abatement, encapsulation or removal, and any governmental reporting, and in such event Otis shall be entitled to (i) delay its work until it is determined to Otis' satisfaction that no hazard exists and (ii) compensation for delays encountered.

MATERIAL RESPONSIBILITY

Otis maintains no responsibility for material delivered to the jobsite. The Customer is financially responsible for all cost to replace any damaged, stolen or missing material or equipment. Otis will not be responsible for deductibles on "Builder's Risk" insurance policies. Otis will provide a change order, police report and affidavits as needed to substantiate the claim. Otis will not procure replacement equipment until a signed change order is received.

LOCKOUT TAG OUT

In furtherance of OSHA's directive contained in 29 C.F.R. § 1910.147(f)(2)(i), which requires that a service provider (an "outside employer") and its customer (an "on-site employer") must inform each other of their respective lock out/tag out ("LOTO") procedures whenever outside servicing personnel are to be engaged in control of hazardous energy activities on the customer's site, Otis incorporates by reference its mechanical LOTO procedures and its electrical LOTO procedures. These procedures can be obtained at www.otis.com by (1) clicking on "The Americas" tab on the left side of the website; (2) choosing "US/English" to take you to the "USA" web page; (3) clicking on the "Otis Safety" link on the left side of the page; and (4) downloading the "Lockout Tagout Policy Otis 6.0" and "Mechanical Energy Policy Otis 7.0,", or the then most current version, both of which are in .pdf format on the right side of the website page. Customer agrees that it will disseminate these procedures throughout its organization to the appropriate personnel who may interact with Otis personnel while Otis personnel are working on site at Customer's facility.

CONFINED SPACES

© OTIS ELEVATOR COMPANY, 2026 All Rights Reserved

The machine room, hoistway, pit and mezzanine ("Elevator Spaces") may be considered Permit- Required Confined Spaces as defined by the Occupational Safety and Health Organization ("OSHA"), 29 C.F.R. § 1910.146(b) and § 1926 Subpart AA. Otis has a documented process to control or eliminate hazards and classify such Elevator Spaces as non-permit required confined spaces. In the event that the Customer, others, or unique site conditions or hazards (such as chemical manufacturing sites) require Otis to handle such Elevator Spaces as Permit-Required Confined Spaces, the Customer or owner will be responsible for supplying, at its expense, all resources, including monitoring, permitting, attendants and rescue planning associated with handling such Elevator Spaces as Permit-Required Confined Spaces. The Customer or owner is required to inform Otis of all known or potential hazards related to Elevator Spaces that Otis may be required to access prior to Otis performing any work in such spaces. Further, the Customer or owner is required to communicate any changes in the conditions associated with such Elevator Spaces or activities in or around such spaces that could introduce a hazard into such spaces.

Section 10

GENERAL REQUIREMENTS

EXAMINATION OF EQUIPMENT

Except insofar as your equipment may be covered by an Otis maintenance or service contract, it is agreed that we will make no examination of your equipment other than that necessary to do the work described in this Contract and assume no responsibility for any part of your equipment except that upon which work has been done under this contract.

RE-MOBILIZATION

You agree to pursue and schedule the work by other trades in a timely manner so as to not interrupt our work. Should our crew(s) have to suspend work on the job to await the conclusion of work by others not party to this contract, we shall be entitled to a re-mobilization charge of **five thousand ($5,000) dollars**. We shall also extend the stated durations to the extent that we are delayed.

INSURANCE

OTIS

Otis agrees to maintain General Liability coverage in the amount of $1,000,000 per occurrence and $2,000,000 in the aggregate, Automobile Liability in the amount of $1,000,000 Combined Single Limit for Bodily Injury and Property Damage, Worker's Compensation in statutory limits. Employer's Liability in the amount of $1,000,000 for Each Accident, Each Employee – Disease. We shall maintain worker's compensation and employers' liability insurance covering our liability for injury or death sustained by our employees, and comprehensive general liability insurance.

CUSTOMER

~~You shall insure that all risk insurance upon the full value of the Work and material delivered to the job site is maintained at no cost to us.~~

© OTIS ELEVATOR COMPANY, 2026 All Rights Reserved

CERTIFICATES
If either party so requires, in writing, the other party shall furnish a copy of the certificates of insurance evidencing the above insurance coverages.

PRE-EXISTING CONDITIONS HYDRAULIC

We have not included for any additional costs associated with identifying or correcting car weights previously increased or decreased more than the ASME code allowance of 5% of original design.

PAYMENT AND SCHEDULE OF VALUES

You agree to be bound and pay in accordance with the supplied schedule of values. We shall be paid for our material delivery invoice prior to starting installation work. We shall be paid in full for all change orders and the base Contract amount **(no less than 95%)** prior to scheduling an inspection and/or turnover of the elevators to you for use. Otis reserves the right at its absolute discretion to discontinue work or not turn over elevators unless payments are current.

- Our quoted price is based on the "Initial Payment" equaling **fifty percent (50%)** of Contract award. This amount PLUS a fully executed subcontract must be received prior to releasing equipment for manufacturing or scheduling any other work. Refer to the "Schedule of Values" below.
- Otis will mobilize after the "Material Delivery Payment" is received. See "Schedule of Values" below.
- If Otis is directed by you to furnish any labor, service, or material that is outside of the mutually agreed upon scope of work of this Contract("Out of Scope Work"), Otis may agree to perform such Out of Scope Work (1) subject to receipt of a written notice to proceed prior to commencement of any such Out of Scope Work; and (2) contingent upon receipt of a mutually agreed upon and executed change order within thirty (30) calendar days of such written notice to proceed. If the parties are unable to agree to terms that lead to the issuance of a mutually agreed upon and executed change order within such thirty (30) day period, Otis may suspend the Out of Scope Work. Notwithstanding any other provision, language, term or condition to the contrary, Otis shall not be liable for any project delays and/or damages, including but not limited to liquidated damages, associated with a delay in the issuance of a mutually agreed upon and executed change order.

SUBSTANTIAL COMPLETION/"LABOR PROGRESS PAYMENTS"

- This payment is due upon substantial completion of each modernized elevator. The "Labor Progress Payment" amount shown on the SOV is divided by the total number of elevators being modernized as a part of this Contract. Substantial completion is defined as a functional elevator that is acceptable by the authority having jurisdiction as useable for temporary or general use. Any agreed upon punch-list items will be corrected within a mutually agreeable timeframe. This payment, however, is still due upon substantial completion of each elevator.
- Final retention payment shall be due within thirty (30) days after acceptance of each elevator installation. Otherwise, warranties shall be suspended or terminated at Otis' absolute discretion.
- All change orders must be executed and paid prior to scheduling a final inspection and turnover of each elevator to customer.

© OTIS ELEVATOR COMPANY, 2026 All Rights Reserved

- Otis will not agree to any language referencing or implying "pay when paid." This Contract is between Otis Elevator and referenced entity. The attached payment schedule ("Schedule of Values") is not contingent upon said entity's ability to be paid by others or any other factor or event not described above.
- A processing fee will be applied to credit card payments.

SCHEDULE OF VALUES			
Base Contract Amount: **$114,840**			
DUE DATE	**DESCRIPTION**	**%**	**VALUE**
Due within 30 days from date of invoice or prior to release of factory orders, whichever occurs first.	Engineering/Drawings/Mobilization "Initial Payment"	**50%**	**$57,420**
Due within 30 days from date of invoice or prior to installation, whichever occurs first. Installation will not commence until this material payment is made.	Materials for project "Material Delivery Payment"	**25%**	**$28,710**
Due within 30 Days from substantial completion of each elevator.	Installation labor "Labor Progress Payments"	**25%**	**$28,710**

LEAD TIME AND DURATION

We anticipate approximately 16 weeks manufacturing time from receipt of approvals and down payment.

Thereafter, we expect the modernization to take approximately 4 weeks per car. All work will be performed during our regular working hours of our regular working days.

SCHEDULE

Our proposal is based on a delivery date of 07/30/2026. If the delivery date is delayed 90 calendar days or greater, customer agrees to pay applicable factory material price increases. A fully executed change order and full payment of the price increase, in addition to full payment of the required down payment by Customer is required prior to the factory material being ordered and released. Additionally, if your project schedule changes and extends installation or completion of labor into a future year or year(s), Customer

© OTIS ELEVATOR COMPANY, 2026 All Rights Reserved

agrees to pay applicable labor escalation price increases. A fully executed change order regarding the labor escalation price increase must be executed prior to mobilization and the start of any work.

Due to current market conditions the availability of elevator installation labor is limited. If this proposal is not accepted within 30 days, prior to acceptance of any award Otis reserves the unilateral right to decline the award based on a review of the project schedule and our labor availability/commitments.

CODE CLARIFICATIONS

ASME A17.1 / CSA B44 (2016 or earlier): It is our understanding the International Building Code (IBC), 2018 Edition is NOT applicable to this project. Otis has included an emergency communication system that conforms to ASME A17.1 / CSA B44 (2016 or earlier), Requirement 2.27.1.1. It should be noted that at the present time there is a potential conflict concerning the emergency communication system requirements between IBC 2018 and ASME A17.1 / CSA B44 (Safety Code for Elevators and Escalators) and you agree to to hold Otis harmless for any claim, loss, cost, or damage in connection with any such conflict.

Work By Others

Customer or owner will provide one (1) dedicated outside telephone line to the elevator machine room as described in the "Work by Others" section.

Section 11

ALTERNATES

ALTERNATE 1 – NEW ELEVATOR CAB INTERIORS (OPTION)

New elevator cab interiors will be provided with the following specifications:

Plastic laminate horizontal panels
Brushed stainless steel reveals behind horizontal panels
Brushed stainless steel handrail
Stainless steel grid ceiling panels
LED energy-saving lights installed in ceiling panels

Price: $15,000 per elevator. $15,000 (Fifteen Thousand Dollars)

Please indicate your intention to choose this option by initialing here M.R. ___

© OTIS ELEVATOR COMPANY, 2026 All Rights Reserved

The extent of the work to be performed is either described above or in the attached specification which is incorporated into and made a part of this document.

PRICE	$114,840 "Cost Excluding AR Sales Tax"
	One Hundred Fourteen Thousand Eight Hundred Forty Dollars

This price is based on a **fifty percent (50%)** downpayment in the amount of $57,420

This proposal, including the provisions printed on the pages following, shall be a binding contract between you, or the party identified below for whom you are authorized to contract, and us when accepted by you and our authorized representative through execution of this proposal; or by your authorizing us to perform work for the project and our commencing such work. The purchase price in the Contract is subject to increase caused by any reason beyond Otis' reasonable control including but not limited to commodity, fuel, tariff, and/or shipping transportation cost increases. This quotation is valid for thirty (30) days from the date of submission unless changed by us prior to a fully executed contract.

Accepted in Duplicated

Submitted by: Drew Allen

CUSTOMER

Approved by Authorized Representative

Date: 03/05/2026

Signed: X Molly Rawn

Print Name: Molly Rawn

Title: Mayor

Name of Company: City of Fayetteville

OTIS ELEVATOR COMPANY

Approved by Authorized Representative

Date: 2/24/26

Signed: X Crystal Gateley

Print Name: Crystal Gateley

Title: General Manager

© OTIS ELEVATOR COMPANY, 2026 All Rights Reserved

TERMS AND CONDITIONS

This Contract constitutes the entire understanding between the parties regarding the subject matter hereof and may not be modified by any terms on your order form or any other document and supersedes any prior written or oral communication relating to the same subject. Any amendment or modifications to this Contract shall not be binding upon either party unless agreed to in writing by an authorized representative of each party. Both parties agree that any form issued by you that contains any terms that are inconsistent with those contained herein shall not modify this Contract, nor shall it constitute an acceptance of any additional terms.

The work shall be performed for the agreed price plus any applicable sales, excise or similar taxes as required by law. In addition to the agreed price, you shall pay to us any future applicable tax imposed on us, our suppliers or you in connection with the performance of the work described.

This quotation is subject to change or withdrawal by us prior to written acceptance.

We warrant to you that the work performed by us hereunder shall be free from defects, not inherent in the quality required or permitted, in material and workmanship for one (1) year from the date of substantial completion. Our duty and your remedy under this warranty are limited to our correcting any such defect you report to us within the warranty period by, at our opinion, repair or replacement, provided all payments due under the terms of this Contract have been made in full. All parts used for repair or replacement under this warranty shall be good quality and furnished on an exchange basis. Printed circuit boards used for replacement parts under this warranty may be refurbished boards. Exchanged parts become our property. This warranty excludes any damage due to ordinary wear and tear and any damage due to any reason beyond our reasonable control including but not limited to vandalism, abuse, misuse, neglect, modifications not performed by us, or improper or insufficient maintenance by others. THE EXPRESS WARRANTIES SET FORTH IN THIS CONTRACT ARE THE EXCLUSIVE WARRANTIES GIVEN: WE MAKE NO OTHER WARRANTIES EXPRESS OR IMPLIED, AND SPECIFICALLY MAKE NO WARRANTY OF MERCHANTABILITY OR OF FITNESS FOR ANY PARTICULAR PURPOSE; AND THE EXPRESS WARRANTIES SET FORTH IN THIS CONTRACT ARE IN LIEU OF ANY SUCH WARRANTIES AND ANY OTHER OBLIGATION OR LIABILITY ON OUR PART.

We shall perform the work during our regular working hours of our regular working days unless otherwise agreed in writing. You shall be responsible for providing suitable storage space at the site for our material.

You shall obtain title to the equipment furnished hereunder when final payment for such equipment is received by us. In addition, you shall be granted a license to use software incorporated into such equipment solely for operating such equipment and in accordance with the terms regarding licensing further below. Further, Customer shall not have the right to take title or possession of any of Otis' tools or machinery used by Otis in providing its services or work.

Any drawings, illustrations or descriptive matter furnished with the proposal are submitted only to show the general style, arrangement and dimensions of the equipment.

Payments shall be made pursuant to the payment schedule above and on the following terms: If the work is not completed within a thirty day period, monthly progress payments shall be made based on the value of any equipment ready or delivered, if any, and labor performed through the end of the month less the agreed upon retainage and the aggregate of previous payments. We shall be paid in full for all change orders and no less than the percentage base contract amount stated above prior to scheduling an inspection and/or turnover of the elevators to you for use. The retainage shall be paid when the work is completed. We reserve the right to discontinue our work at any time until payments shall have been made as agreed and we have assurance satisfactory to us that subsequent payments will be made when due. ~~Payments not received within thirty (30) days of the date of invoice shall be subject to interest accrued at the rate of eighteen percent (18%) per annum or at the maximum rate allowed by applicable law, whichever is less.~~ We shall also be entitled to reimbursement from you of the expenses, including attorney's fees, incurred in collecting any overdue payments.

Any material removed by us in the performance of the work shall become our property.

Our performance is conditioned upon your securing any required governmental approvals for the installation of any equipment provided hereunder and your providing our workmen with adequate electrical power at no cost to us with a safe place in which to work, and we reserve the right to discontinue our work in the building whenever in our opinion working conditions are unsafe. If overtime work is mutually agreed upon and performed, an additional charge thereof, at our usual rates for such work, shall be added to the Contract price. The performance of our work hereunder is conditioned on your performing the preparatory work and supplying the necessary data specified on the front of this proposal or in the attached specification, if any. Should we be required to make an unscheduled return to your site to begin or complete the work due to your request, acts or omissions, then such return visits shall be subject to additional charges at our current labor rates. We disclaim any responsibility for claims or damages associated with elevator service interruptions caused by or resulting from work performed by you or others retained by you to perform work.

We shall retain a security interest in all material furnished hereunder and not paid for in full. You agree that a copy of this Contract may be used by us as a financing statement for the purpose of placing upon public record our interest in any material furnished hereunder, and you agree to execute a UCC-1 form or any other document reasonably requested by us for that purpose.

Except insofar as your equipment may be covered by an Otis maintenance or service contract, it is agreed that we will make no examination of your equipment other than that necessary to do the work described in this Contract and assume no responsibility for any part of your equipment except that upon which work has been done under this Contract.

© OTIS ELEVATOR COMPANY, 2026 All Rights Reserved

We do not agree under our warranty to bear the cost of repairs or replacements due to vandalism, abuse, misuse, neglect, normal wear and tear, modifications not performed by us, improper or insufficient maintenance by others, or any cause beyond our control.

We shall conduct, at our own expense, the defense of any claim, suit or action alleging that, without further combination, the use by you of any equipment provided hereunder directly infringes any patent, but only on the conditions that (a) we receive prompt written notice of such claim, suit or action and full opportunity to assume the sole defense thereof, including settlement and appeals, and all information available to you for such defense; (b) said equipment is made according to a specification or design furnished by us; and (c) the claim, suit or action is brought against you. Provided all of the foregoing conditions have been met, we shall, at our own expense, either settle said claim, suit or action or shall pay all damages excluding consequential damages and costs awarded by the court therein and, if the use or resale of such equipment is finally enjoined, we shall at our option, (i) procure for you the right use of the equipment, (ii) replace the equipment with equivalent noninfringing equipment, (iii) modify the equipment so it becomes noninfringing but equivalent, or (iv) remove the equipment and refund the purchase price (if any) less a reasonable allowance for use, damage or obsolescence.

Under no circumstances shall either party be liable for special, indirect, liquidated, or consequential damages or losses of any kind including, but not limited to, loss of revenues, loss of profits, loss of rents, loss of good will, loss to business opportunity, or harm to business reputation, in contract, tort, including negligence, warranty or otherwise, notwithstanding any indemnity provision to the contrary. We will use commercially reasonable efforts to complete the work set forth herein with minimal disruption to elevator service for you and your tenants (as applicable). Notwithstanding the foregoing, the parties acknowledge that delays and disruptions in service are a normal result of the type of work described herein, and notwithstanding any other representations, warranties or indemnity obligations hereunder, we will have no liability for any direct or indirect damages resulting from interruptions in elevator service during the performance of our obligations. ~~Neither party's liability to the other for any reason arising from this Contract shall exceed the value of the Contract~~

Otis shall not be liable for any loss, damage, or delay nor be found to be in default or breach due to any cause beyond it's reasonable control including, but not limited to acts of God or nature: fire: explosion; theft; floods; water; weather; traffic conditions; epidemic, pandemic, quarantine or other local, state, or federal government action in response thereto; sabotage; national emergency; act of terrorism; earthquake; riot; civil commotion; war; vandalism; national or local labor strikes, lockouts, other labor disputes; misuse, abuse, neglect, mischief, or work by others (collectively "Causes Beyond Otis' Reasonable Control"). Otis shall be allowed a reasonable amount of additional time for the performance of the Work due to Causes Beyond Otis' Reasonable Control. Otis' ability to maintain scheduled job progress is further conditioned upon the timely furnishing to Otis by Customer of completed and code compliant hoistway(s) (wellway) and machine rooms, necessary approvals and power of proper characteristics for Otis' uninterrupted use.

The products and/or services being provided may result in the collection of Personal Information. The Parties will comply with applicable Data Privacy Laws as they pertain to personal information processed in connection with activity under this Contract. "Personal Information" shall mean information and data exchanged under this Contract related to an identifiable natural person. "Processing" of Personal Information shall mean the operation or set of operations whether automated or not, performed on Personal Information such as collecting, recording, organizing, structuring, storing, adapting, altering, retrieving, consulting, using, disclosing, sharing or erasing. "Controller" shall mean the party that determines the purposes and means of processing Personal Information. With respect to any Personal Information provided by you to Otis, you shall be the Controller and you warrant that you have the legal right to share such Personal Information with Otis and you shall be responsible for all obligations relating to that data, including without limitation providing notice or obtaining consent as may be required by law. Once you have lawfully provided Personal Information to Otis, you and Otis shall become co-Controllers. Otis may share such Personal Information internally, across borders and with service providers in accordance with applicable Data Privacy Laws. Otis transfers information subject to the corporate rules of its parent company. Otis may store Personal Information provided by you on servers located and accessible globally by Otis and its parent and their services providers. The parties agree to cooperate and to take reasonable commercial and legal steps to protect Personal Information against undue disclosure. In this regard each party shall notify the other in the event of a data breach, which shall include the actual or unauthorized access to or possession of, or the loss or destruction of, Personal Information, whether intentional or accidental. The party whose system was compromised in the data breach incident shall be responsible for any notifications and associated costs. Should either party receive in any form, (i) a complaint or allegation indicating a violation of applicable data privacy law, (ii) a request seeking access to correct or delete Personal Information or (iii) an inquiry or complaint related to the processing of personal information, said party shall take reasonable commercial steps to immediately notify the other party.

~~Your remedies set forth herein are exclusive and our liability with respect to any contract, or anything done in connection therewith such as performance or breach thereof, or from the manufacture, sale, delivery, installation, repair or use of any equipment furnished under this contract, whether in contract, in tort, in warranty or otherwise, shall not exceed the price for the equipment or services rendered.~~

It is agreed that after completion of our work, you shall be responsible for ensuring that the operation of any equipment furnished hereunder is periodically inspected.

By accepting delivery of parts incorporating software you agree that the transaction is not a sale of such software but merely a license to use such software solely for operating the unit(s) for which the part was provided, not to copy or let others copy such software for any purpose whatsoever, to keep such software in confidence as a trade secret, and not to transfer possession of such part to others

© OTIS ELEVATOR COMPANY, 2026 All Rights Reserved

except as a part of a transfer of ownership of the equipment in which such part is installed, provided that you inform us in writing about such ownership transfer and the transferee agrees in writing to abide by the above license terms prior to any such transfer.

Our work shall not include the identification, detection, abatement, encapsulation or removal of asbestos, polychlorinated biphenyl (PCB), or products or materials containing asbestos, PCB's or other hazardous substances. In the event we encounter any such product or materials in the course of performing work, we shall have the right to discontinue our work and remove our employees from the project until you have taken the appropriate action to abate, encapsulate or remove such products or materials, and any hazards connected therewith, or until it is determined that no hazard exists (as the case may require). We shall receive an extension of time to complete the work hereunder and compensation for delays encountered as a result of such situation.

This Contract constitutes the entire understanding between the parties regarding the subject matter hereof and may not be modified by any terms on your order form or any other document and supersedes any prior written or oral communication relating to the same subject. Any amendment or modifications to this Contract shall not be binding upon either party unless agreed to in writing by an authorized representative of each party. Both parties agree that any form issued by you that contains any terms that are inconsistent with those contained herein shall not modify this Contract, nor shall it constitute an acceptance of any additional terms.

© OTIS ELEVATOR COMPANY, 2026 All Rights Reserved

OFFICE OF THE
CITY ATTORNEY

DEPARTMENTAL CORRESPONDENCE

Kit Williams
City Attorney

Blake Pennington
Senior Assistant City Attorney

Hannah Hungate
Assistant City Attorney

Stacy Barnes
Paralegal

TO: **Byron Humphrey**, Director of Parks Operations & Facilities
Quin Thompson, Facilities & Building Maintenance Manager

FROM: **Blake Pennington**, Senior Assistant City Attorney

DATE: **February 25, 2026**

RE: **Changes Requested to Otis Elevator Contract**

I have noted in the attached contract four changes our office is requesting:

- Section 10, General Requirements; Insurance: Strike "You shall insure that all risk insurance upon the full value of the Work and material delivered to the job site is maintained at no cost to us." (Page 15 of 22)
- Terms and Conditions:
  - Strike "Payments not received within thirty (30) days of the date of invoice shall be subject to interest accrued at the rate of eighteen percent (18%) per annum or at the maximum rate allowed by applicable law, whichever is less." (Page 20 of 22)
  - Strike "Neither party's liability to the other for any reason arising from this Contract shall exceed the value of the Contract." (Page 21 of 22)
  - Strike "Your remedies set forth herein are exclusive and our liability with respect to any contract, or anything done in connection therewith, such as performance or breach thereof, or from the manufacture, sale, delivery, installation, repair or use of any equipment furnished under this contract, whether in contract, in tort, in warranty or otherwise, shall not exceed the price for the equipment or services rendered." (Page 21 of 22)

Crystal Gateley

Crystal Gateley

CITY OF FAYETTEVILLE ARKANSAS

CITY COUNCIL MEMO
2026-1810

MEETING OF JUNE 16, 2026

TO: Mayor Rawn and City Council

THROUGH: Chris Brown, Public Works Director
Terry Gulley, Asst Public Works Director - Ops

FROM: Jared Rabren, Airport Director

SUBJECT: **Drake Field - Terminal Modernization Plan**

RECOMMENDATION:
Staff recommends approval of a Resolution authorizing staff to proceed with the Drake Field Airport Terminal Modernization project in the amount of $200,000, to approve the purchase of furniture from The Norman Company, Inc. in the amount of $157,035.74, pursuant to TIPS and Omnia cooperative contracts, and to approve a budget amendment.

BACKGROUND:
Drake Field Airport serves as a significant economic gateway into the City of Fayetteville. Each year, the airport is used by corporate travelers, public figures, dignitaries, elected officials, and other visitors who come to Fayetteville for business, athletics, government, and community-related purposes. In many cases, the Drake Field terminal is the first impression these visitors have of the city.

The terminal has not received meaningful investment, improvement, or modernization in more than 21 years. Much of the existing furniture and interior condition dates back to improvements made by the former fixed-base operator prior to the City assuming operation of Drake Field in 2013. As a result, the terminal no longer fully reflects our community or the role the airport plays as an economic front door into the community.

This project would modernize the terminal through a series of targeted investments designed to improve the user experience, enhance the functionality of the facility, and better position Drake Field as the economic development asset and civic gateway that it is. These improvements will benefit a wide range of airport users, including corporate travelers, visitors, tenants, airport staff, and Razorback Athletics teams that routinely use Drake Field for travel.

DISCUSSION:
Scope of Project:
The Drake Field terminal modernization plan includes several strategic improvements designed to expand seating, enhance functionality, improve the user experience, and elevate the overall interior of the terminal into a more welcoming space that reflects both the City of Fayetteville and the airport's role as an economic driver.

The largest component of the project is the installation of new furniture throughout the terminal. This investment will improve seating capacity, functionality, comfort, and the overall appearance of the facility. The expanded seating will serve all Drake Field users and will also better accommodate Razorback Athletics, ensuring full teams have adequate seating during game day departures and other travel needs. The furniture

purchase from The Norman Company, Inc. will be utilizing cooperative contracts through TIPS (#230301) and Omnia (#2020000606).

In addition to new furniture, the project includes new paint, carpet, lighting, and technology upgrades, including improved Wi-Fi infrastructure. Together, these improvements will provide a comprehensive refresh of the terminal and help ensure Drake Field presents a professional, functional, and welcoming environment for visitors, corporate users, athletic teams, and the broader community.

The Benefits of the Drake Field Terminal Modernization Project:
The Drake Field Terminal Modernization project provides clear benefits to the City, the airport, and the broader community. While the project focuses on interior improvements, its impact extends beyond furniture, paint, carpet, lighting, and technology upgrades. At its core, this project ensures one of Fayetteville's most important gateways reflects the quality, professionalism, and momentum of the city.

The project strengthens Drake Field's role as an economic development asset. Airport users routinely visit Fayetteville for business, institutional, athletic, and community-related purposes. In many cases, the terminal is their first impression of Fayetteville. A modern, comfortable, and professional terminal helps communicate that Fayetteville values its public assets, supports growth, and takes seriously the experience it provides to visitors, investors, and partners.

The project also improves functionality for all terminal users. New furniture will expand seating capacity, improve comfort, and create a more usable layout for passengers, guests, airport staff, tenants, and other airport users. These improvements are especially important as activity at Drake Field continues to grow and as the airport serves a broader range of users, including corporate aviation, flight training, institutional travel, community events, and Razorback Athletics team travel.

As Fayetteville continues to grow, the airport will play an increasingly important role in economic, tourism, athletics, and regional connectivity. A modernized terminal helps ensure Drake Field is prepared to serve that role and meet the existing and future needs of its customers.

BUDGET/STAFF IMPACT:
A budget amendment to add $200,000 to the Airport Terminal Improvements Project for the Drake Field Terminal Modernization Plan is attached.

ATTACHMENTS: 3. Staff Review Form, 4. Budget Amendment, 5. Drake Field Terminal Modernization Plan 5_21_2026, 6. City of Fay. Drake Field Concourse

113 West Mountain Street
Fayetteville, AR 72701
(479) 575-8323

File #: 2026-1810

A RESOLUTION TO AUTHORIZE STAFF TO PROCEED WITH THE DRAKE FIELD AIRPORT TERMINAL MODERNIZATION PROJECT IN THE AMOUNT OF $200,000.00, TO APPROVE THE PURCHASE OF FURNITURE IN THE AMOUNT OF $157,035.74 FROM THE NORMAN COMPANY, INC. PURSUANT TO TIPS AND OMNIA COOPERATIVE PURCHASING CONTRACTS, AND TO APPROVE A BUDGET AMENDMENT

WHEREAS, Drake Field Airport serves as a significant economic gateway into the City of Fayetteville that is used each year by corporate travelers, public figures, dignitaries, elected officials, and other visitors who come to Fayetteville for business, athletics, government, and community-related purposes; and

WHEREAS, the terminal has not received meaningful investment, improvement, or modernization in more than 21 years; and

WHEREAS, much of the existing furniture and interior condition dates back to improvements made by the former fixed-base operator prior to the City assuming operation of Drake Field in 2013; and

WHEREAS, the project will modernize the terminal through a series of targeted investments designed to improve the user experience, enhance the functionality of the facility, and better position Drake Field as an economic development asset and civic gateway.

NOW, THEREFORE, BE IT RESOLVED BY THE CITY COUNCIL OF THE CITY OF FAYETTEVILLE, ARKANSAS:

Section 1: That the City Council of the City of Fayetteville, Arkansas hereby authorizes staff to proceed with the Drake Field Airport Terminal Modernization project in the amount of $200,000.00.

Section 2: That the City Council of the City of Fayetteville, Arkansas hereby authorizes the purchase of furniture in the amount of $157,035.74 from the Norman Company, Inc., pursuant to TIPS and Omnia Cooperative Purchasing contracts.

Section 3: That the City Council of the City of Fayetteville, Arkansas hereby approves a budget amendment, a copy of which is attached to this Resolution.

City of Fayetteville Staff Review Form

2026-1810

Item ID

6/16/2026

City Council Meeting Date - Agenda Item Only
N/A for Non-Agenda Item

Jared Rabren	5/22/2026	AIRPORT SERVICES (760)
Submitted By	**Submitted Date**	**Division / Department**

Action Recommendation:

Staff recommends approval of a Resolution authorizing staff to proceed with the Drake Field Airport Terminal Modernization project in the amount of $200,000, to approve the purchase of furniture from Norman Company in the amount of $157,035.74 and to approve a budget amendment.

Budget Impact:

4470.090.8900-5400.00 4470.090.8900-5210.00	Airport
Account Number	Fund
18020.1	Airport Terminal Improvements
Project Number	Project Title

Budgeted Item?	Yes	Total Amended Budget	$	14,287.00
		Expenses (Actual+Encum)	$	14,287.00
		Available Budget	$	-
Does item have a direct cost?	No	Item Cost	$	-
Is a Budget Amendment attached?	Yes	Budget Amendment	$	200,000.00
		Remaining Budget	$	200,000.00

Purchase Order Number: _____ **Previous Ordinance or Resolution #** _____

Change Order Number: _____ **Approval Date:** _____

Original Contract Number: _____

Comments:

City of Fayetteville, Arkansas - Budget Amendment/Adjustment (Agenda)

Budget Year	Division /Org2	AIRPORT SERVICES (760)	BA Number
2026	Requestor:	Dee Simpson	

BUDGET AMENDMENT/ADJUSTMENT DESCRIPTION:

Staff recommends approval of a Resolution authorizing staff to proceed with the Drake Field Airport Terminal Modernization project in the amount of $200,000 and approval a budget amendment.

COUNCIL DATE: 6/16/2026

ITEM ID#: **2026-1810**

Holly Black
5/23/2026 8:15 AM

Budget Division Date

TYPE: **D - (City Council)**

JOURNAL #:

GLDATE:

CHKD/POSTED: /

RESOLUTION/ORDINANCE

v.202658

Account Number	Increase / (Decrease) Expense	Revenue	Project.Sub# Project	Sub.Detl	AT	Account Name
TOTAL	-	-				
4470.090.8900-5400.00	40,000	-	18020	1	EX	Building & Grounds - Maintenance
4470.090.8900-5210.00	160,000	-	18020	1	EX	Minor Equipment
4470.090.8900-5315.00	(200,000)	-	13046	1	EX	Contract Services
	-	-				
	-	-				
	-	-				
	-	-				
	-	-				
	-	-				
	-	-				
	-	-				
	-	-				
	-	-				
	-	-				
	-	-				
	-	-				
	-	-				

Drake Field Airport Terminal Modernization Plan

Overview of Terminal Modernization Budget:

Item	Cost
Furniture for Terminal	$159,540
Demo and Paint work within Terminal	$4,848
Carpet	$6,000
Terminal Display and Television Upgrades	$3,600
Wi-Fi Infrastructure Upgrades	$1,400
Lighting Upgrades	$7,000
Cost-Overruns, Misc. Improvements	$17,612
Total	$200,000

Narrative for Furniture and Space Enhancements:

The Drake Field terminal modernization project begins with the removal of existing furniture and wall paneling, followed by a full interior refresh including new paint and replacement of flooring throughout the terminal. The welcome desk has been repositioned to improve circulation, enhance functionality, and open the seating area for greater capacity and comfort.

Additional improvements include upgraded lighting throughout the facility and targeted technology enhancements, including new televisions, flight information displays, and expanded Wi-Fi infrastructure to improve connectivity and overall user experience.

The project is completed with the installation of new furniture, significantly increasing both the quantity and quality of seating available to visitors, passengers, and corporate users of Drake Field.

Overview of Furniture and Space Enhancements:

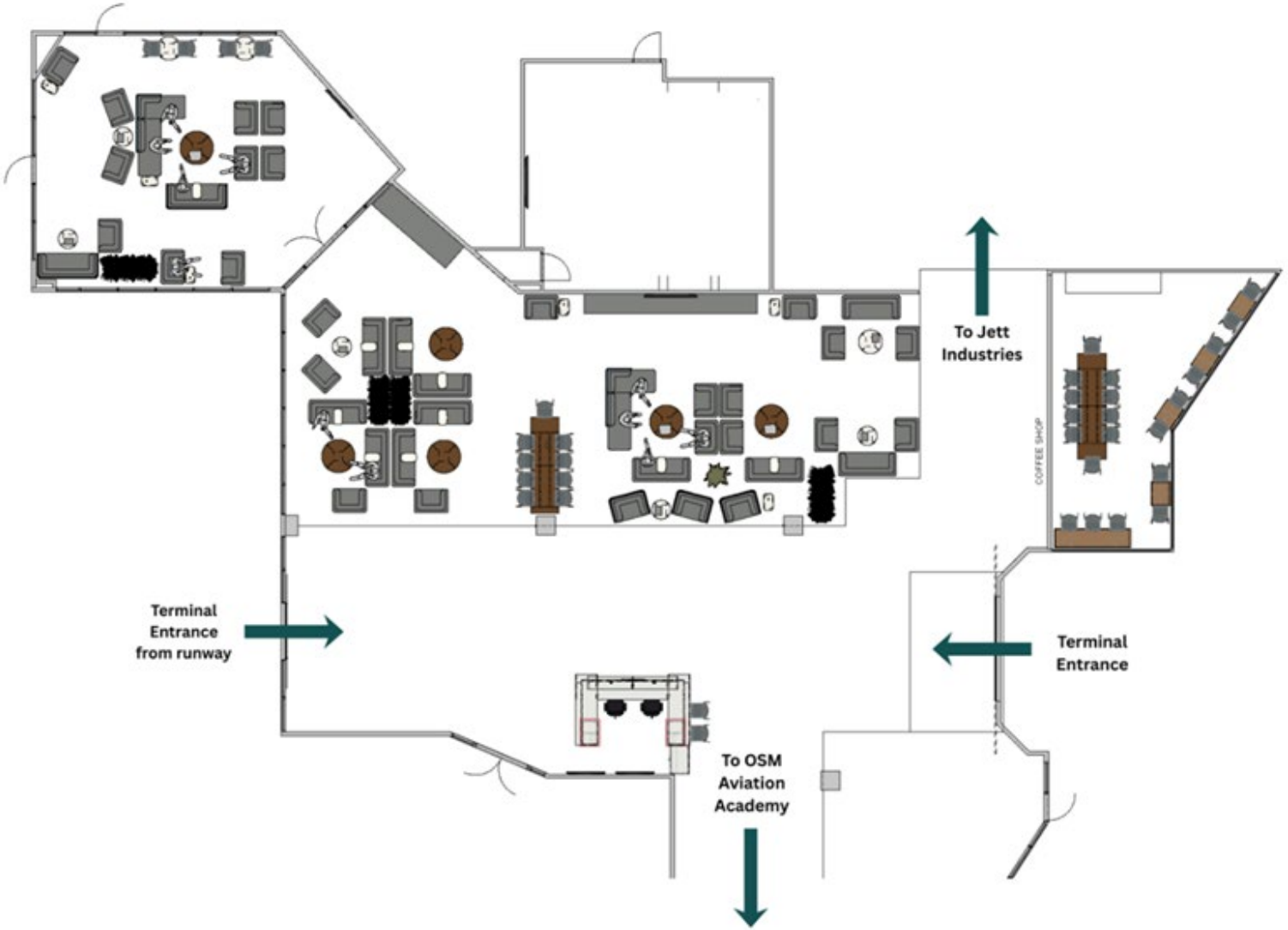

Coffee Shop Improvements:

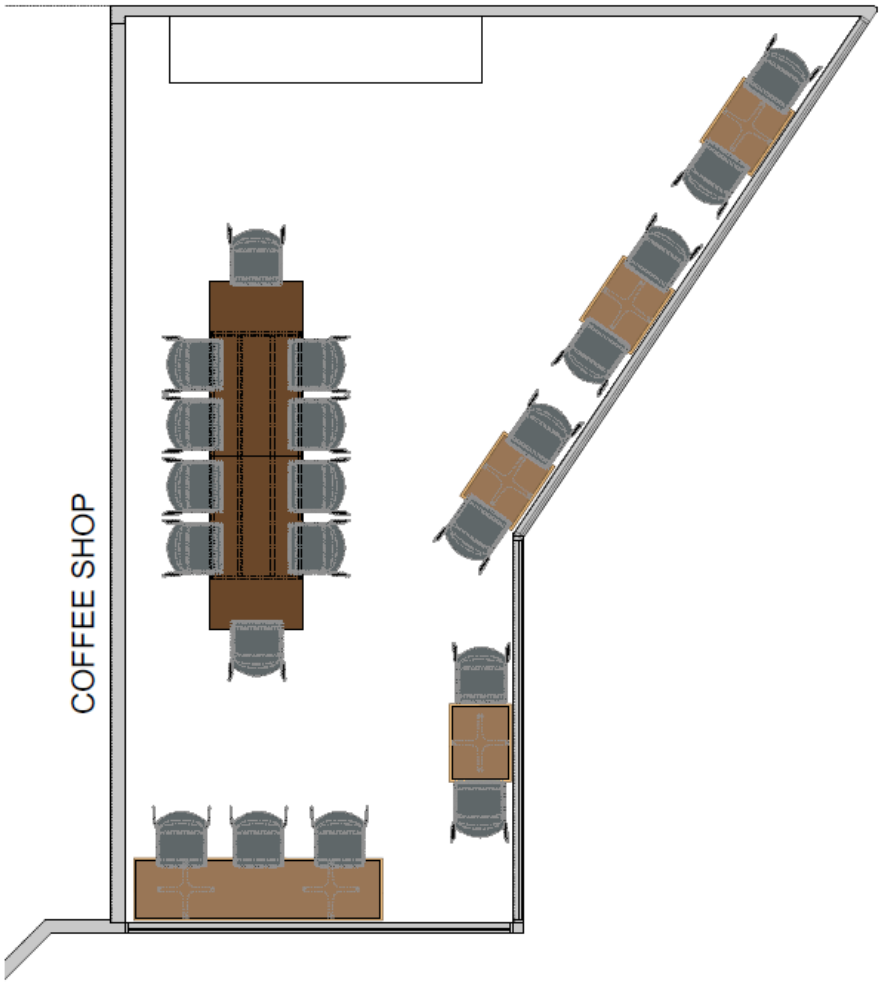

norman company
PROFESSIONAL OFFICE INTERIORS

CITY OF FAYETTEVILLE
Drake Field Concourse

REV	DESCRIPTION	DWN	DATE
1	Revised layout/removal sidebar, added seating	CAR	3/7/25

3547.001

This drawing is the property of Norman Company and shall remain its property. It may not be reproduced by any means or used without the express written

Customer Signoff:

Signoff Date:

2/7

Terminal Seating Area Improvements:

Terminal Seating Area Improvements Continued:

Terminal Seating 75Area Improvements Continued:

Staff Terminal Welcoming Desk Enhancements:

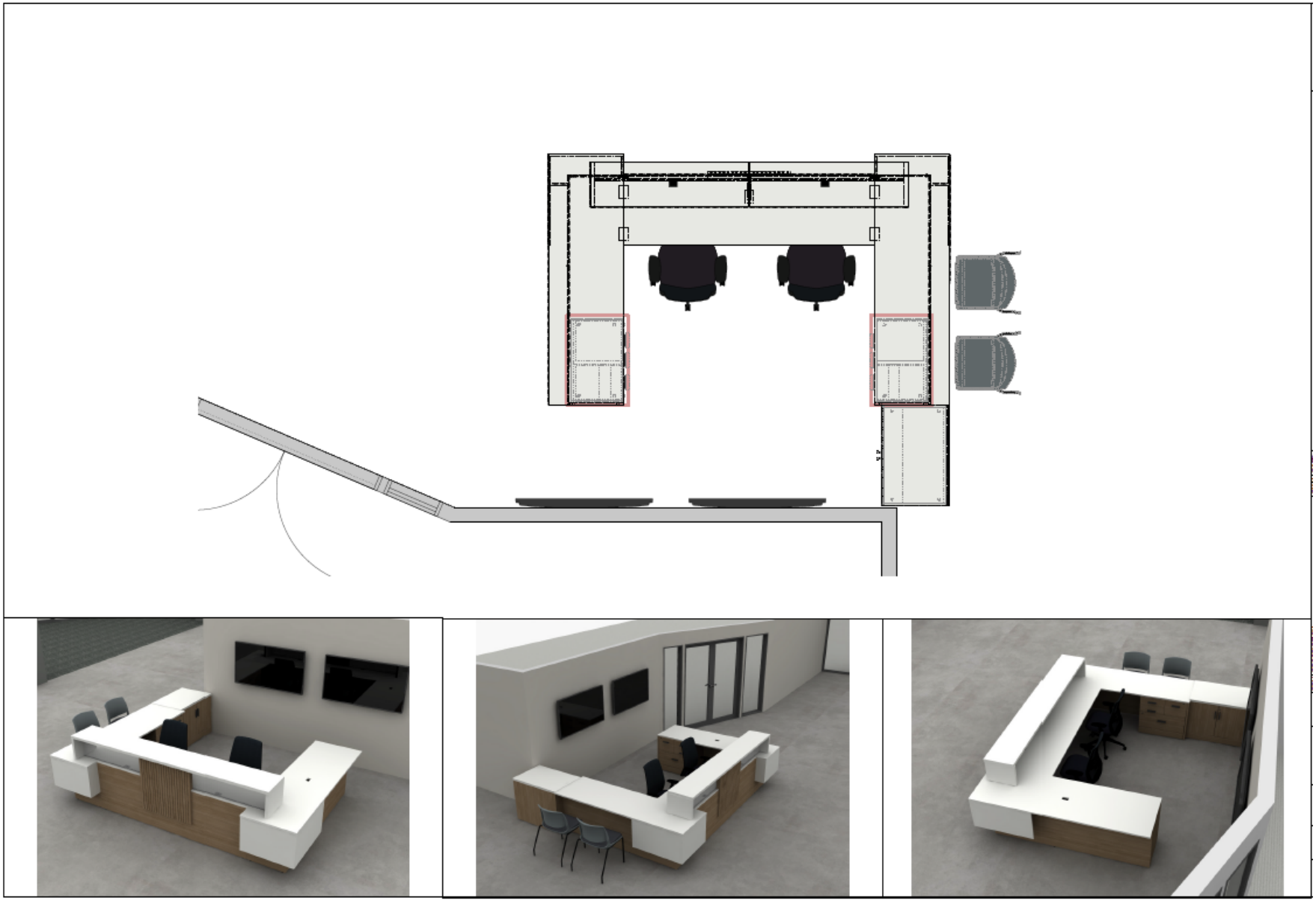

The Norman Company, Inc.
7600 Ball Road
Fort Smith, AR 72908
Phone: 479-424-1600
Fax: 479-424-2471
Email/Web:
www.normancompany.com

Quotation

Project: 3547
Proj Desc: City of Fay. - Drake Field Con course
Quote: 3547.001
Status: New

Sold To: 42-00
City of Fayetteville
113 W. Mountain
Fayetteville, AR 72701
Attention: Quin Thompson

Bill To: 42-00
City of Fayetteville
113 W. Mountain
Fayetteville, AR 72701
Attention: Quin Thompson

Ship To: 42-09
City of Fayetteville
Drake Field
4500 S. School Ave.
Fayetteville, AR 72701
Attention: Jared Rabren
Email: jrabren@fayetteville-ar.org

Date Entered	Salesperson	FOB	Terms
03/17/2026	Jim Hanson	D	Upon Receipt

Line	Item Number	MFG	Description	Unit List	%	Qty	Unit Price	Extended
			RECEPTION					
1	Z2436TB	GLOBAL	**24"D X 36"W X 29.5"H, STORAGE SHELL TOP AND BACK KIT, USED WITH 28.5"H STORAGE SHELLS, ZIRA**	477.00	54.00	1	219.42	219.42 T
			Tag 1: RECEPTION					
			Tag 5: (GLOBAL) TIPS CONTRACT #230301					
			Options: TFL-M-THERMALLY FUSED LAMINATE, HIGH PERFORMANCE (1" THICK) DWT-M-THERMALLY FUSED LAMINATE, HIGH PERFORMANCE (1" THICK) C3-F-1.5" TOP, STANDARD EDGE ~ZBSE-ZIRA CHASSIS FINISH FAS-ZIRA CHASSIS FINISH ~-GROMMET/ELECTRICAL NOT REQUIRED - CUSTOM GROMMET LOCATIONN ~NGSA-COMMERCIAL FURNITURE OFFERING					
2	Z2790FRRL	GLOBAL	**27"D X 90"W X 30.9"H, LEFT, RECEPTION RETURN W/FLUSH FRONT, ZIRA**	1,793.00	54.00	1	824.78	824.78 T
			Tag 1: RECEPTION					
			Tag 5: (GLOBAL) TIPS CONTRACT #230301					
			Options: TFL-M-THERMALLY FUSED LAMINATE, HIGH PERFORMANCE (1" THICK) DWT-M-THERMALLY FUSED LAMINATE, HIGH PERFORMANCE (1" THICK) ~ZBSE-ZIRA CHASSIS FINISH FAS-ZIRA CHASSIS FINISH ~-GROMMET/ELECTRICAL NOT REQUIRED - LEFT POSITION ~-GROMMET/ELECTRICAL NOT REQUIRED - CENTER POSITION ~-GROMMET/ELECTRICAL NOT REQUIRED - RIGHT POSITION ~-GROMMET/ELECTRICAL NOT REQUIRED - CUSTOM GROMMET LOCATIONN					
3	Z2790FRRR	GLOBAL	**27"D X 90"W X 30.9"H, RIGHT, RECEPTION RETURN W/FLUSH FRONT, ZIRA**	1,793.00	54.00	1	824.78	824.78 T
			Tag 1: RECEPTION					
			Tag 5: (GOBAL) TIPS CONTRACT #230301					
			Options: TFL-M-THERMALLY FUSED LAMINATE, HIGH PERFORMANCE (1" THICK) DWT-M-THERMALLY FUSED LAMINATE, HIGH PERFORMANCE (1" THICK) ~ZBSE-ZIRA CHASSIS FINISH FAS-ZIRA CHASSIS FINISH ~-GROMMET/ELECTRICAL NOT REQUIRED - LEFT POSITION ~POS2-GROMMET/ELECTRICAL CUT-OUT OPTIONS - CENTER POSITION SKPO-GROMMET/ELECTRICAL CUT-OUT OPTIONS - CENTER POSITION ~-GROMMET/ELECTRICAL NOT REQUIRED - RIGHT POSITION SKPO-SKIPPED OPTION					
4	Z30114RFDL	GLOBAL	**30"D X 114"W X 44.7"H, DOUBLE RECEPTION LAMINATE OVERLAY, ZIRA**	6,111.00	54.00	1	2,811.06	2,811.06 T
			Tag 1: RECEPTION					

The Norman Company, Inc.
7600 Ball Road
Fort Smith, AR 72908
Phone: 479-424-1600
Fax: 479-424-2471
Email/Web:
www.normancompany.com

Quotation

Project: 3547
Proj Desc: City of Fay. - Drake Field Con course
Quote: 3547.001
Status: New

Sold To: 42-00
City of Fayetteville
113 W. Mountain
Fayetteville, AR 72701
Attention: Quin Thompson

Bill To: 42-00
City of Fayetteville
113 W. Mountain
Fayetteville, AR 72701
Attention: Quin Thompson

Ship To: 42-09
City of Fayetteville
Drake Field
4500 S. School Ave.
Fayetteville, AR 72701
Attention: Jared Rabren
Email: jrabren@fayetteville-ar.org

Date Entered	Salesperson	FOB	Terms
03/17/2026	Jim Hanson	D	Upon Receipt

Line	Item Number	MFG	Description	Unit List	%	Qty	Unit Price	Extended
			Tag 5: (GLOBAL) TIPS CONTRACT #230301					
			Options: TFL-M-THERMALLY FUSED LAMINATE, HIGH PERFORMANCE (1" THICK) DWT-M-THERMALLY FUSED LAMINATE, HIGH PERFORMANCE (1" THICK) C3-F-1.5" TOP, STANDARD EDGE DWT-M-DESIGNER WHITE DWT ~ZBSE-ZIRA CHASSIS FINISH FAS-ZIRA CHASSIS FINISH GF-M-FROSTED MODESTY ~POS1-GROMMET/ELECTRICAL CUT-OUT OPTIONS - LEFT POSITION AG1-GROMMET/ELECTRICAL CUT-OUT OPTIONS - LEFT POSITION ~-GROMMET/ELECTRICAL NOT REQUIRED - CENTER POSITION ~POS3-GROMMET/ELECTRICAL CUT-OUT OPTIONS - RIGHT POSITION AG3-GROMMET/ELECTRICAL CUT-OUT OPTIONS - RIGHT POSITION ~-GROMMET/ELECTRICAL NOT REQUIRED - CUSTOM GROMMET LOCATIONN					
5	Z30M2XSL	GLOBAL	**19.3"D X 30"W X 28.5"H, STORAGE SHELL W/2 BOX DRAWERS ON LEFT, 1 FILE DRAWER ON RIGHT, 1 LATERAL FILE ON BOTTO**	1,651.00	54.00	1	759.46	759.46 T
			Tag 1: RECEPTION					
			Tag 5: (GLOBAL) TIPS CONTRACT #230301					
			Options: ~ZBSE-ZIRA CHASSIS FINISH FAS-ZIRA CHASSIS FINISH FAS-1-FASHIONISTA FAS ~HAN-HANDLE OPTION (REQUIRED) HR-HANDLE OPTION (REQUIRED) K-401-C-KEYED FOR LOCK #401 ~NGSA-COMMERCIAL FURNITURE OFFERING					
6	Z30M2XSR	GLOBAL	**19.3"D X 30"W X 28.5"H, STORAGE SHELL W/2 BOX DRAWERS ON RIGHT, 1 FILE DRAWER ON LEFT, 1 LATERAL FILE ON BOTTO**	1,651.00	54.00	1	759.46	759.46 T
			Tag 1: RECEPTION					
			Tag 5: (GLOBAL) TIPS CONTRACT #230301					
			Options: ~ZBSE-ZIRA CHASSIS FINISH FAS-ZIRA CHASSIS FINISH FAS-1-FASHIONISTA FAS ~HAN-HANDLE OPTION (REQUIRED) HR-HANDLE OPTION (REQUIRED) K-402-C-KEYED FOR LOCK #402 ~NGSA-COMMERCIAL FURNITURE OFFERING					
7	Z36L2SHS	GLOBAL	**23.4"D X 36"W X 28.5"H, STORAGE SHELL W/1 ADJUSTABLE SHELF, ZIRA**	1,042.00	54.00	1	479.32	479.32 T
			Tag 1: RECEPTION					
			Tag 5: (GLOBAL) TIPS CONTRACT #230301					
			Options: ~ZBSE-ZIRA CHASSIS FINISH FAS-ZIRA CHASSIS FINISH LAM-DOOR TYPE FAS-DOOR TYPE ~-M-FASHIONISTA FAS					

The Norman Company, Inc.
7600 Ball Road
Fort Smith, AR 72908
Phone: 479-424-1600
Fax: 479-424-2471
Email/Web:
www.normancompany.com

Quotation

Project: 3547
Proj Desc: City of Fay. - Drake Field Con course
Quote: 3547.001
Status: New

Sold To: 42-00
City of Fayetteville
113 W. Mountain
Fayetteville, AR 72701
Attention: Quin Thompson

Bill To: 42-00
City of Fayetteville
113 W. Mountain
Fayetteville, AR 72701
Attention: Quin Thompson

Ship To: 42-09
City of Fayetteville
Drake Field
4500 S. School Ave.
Fayetteville, AR 72701
Attention: Jared Rabren
Email: jrabren@fayetteville-ar.org

Date Entered	Salesperson	FOB	Terms
03/17/2026	Jim Hanson	D	Upon Receipt

Line	Item Number	MFG	Description	Unit List	%	Qty	Unit Price	Extended
			~HAN-HANDLE OPTION (REQUIRED) HR-HANDLE OPTION (REQUIRED) K-401-C-KEYED FOR LOCK #401 ~NGSA-COMMERCIAL FURNITURE OFFERING					
12	R5NPUG	GLOBAL	**ARMLESS, FABRIC SEAT & POLYPROPYLENE BACK, STD 4 LEGGED BASE, GLIDES, STACK 5 HIGH ON FLOOR, 10 HIGH ON DOLLY,** **Tag 1:** RECEPTION **Tag 5:** (GLOBAL) TIPS CONTRACT #230301 **Options:** SHW-1-SHADOW SHW ~02-GRADE 02 ~ALLF-GRADE 02 A13F-ALLANTE FREE (GLOBAL) TBL-F-BLACK FRAME TBL BG-C-BLACK NYLON GLIDE ~STD-COMMERCIAL FURNITURE OFFERING	673.00	54.00	2	309.58	619.16 T
42	SJT-20-411A6A	HAWORTH	**SOJI TASK,FAB ST,KNIT BK,HGT ADJ ARM,LUM,BK LOCK,ADJ SEAT,PLST BASE,SFT CSTR,ASSEMBLED** **Tag 1:** RECEPTION **Tag 5:** OMNIA CONTRACT #2020000606 **Options:** (3A)-TELLURE ,3A-18-TELLURE - BLACK, GRADE A (XT)-SOJI KNIT ,XT-1-SOJI KNIT - CARBON, GRADE A ,TR-F-BLACK, GRADE A ,TR-F-BLACK, GRADE A	1,219.81	54.88	2	550.38	1,100.76 T
			CAFE					
8	R5BSNPU	GLOBAL	**BAR HEIGHT STOOL, ARMLESS, FABRIC SEAT & POLYPROPYLENE BACK, STD 4 LEGGED BASE, GLIDES, STACKS 5 HIGH ON FLOOR** **Tag 1:** CAFE **Tag 5:** (GLOBAL) TIPS CONTRACT #230301 **Options:** SHW-1-SHADOW SHW ~02-GRADE 02 ~ALLF-GRADE 02 A13F-ALLANTE FREE (GLOBAL) TBL-F-BLACK FRAME TBL BG-C-BLACK NYLON GLIDE ~STD-COMMERCIAL FURNITURE OFFERING	791.00	54.00	18	363.86	6,549.48 T
11	R5NPUG	GLOBAL	**ARMLESS, FABRIC SEAT & POLYPROPYLENE BACK, STD 4 LEGGED BASE, GLIDES, STACK 5 HIGH ON FLOOR, 10 HIGH ON DOLLY,** **Tag 1:** CAFE **Tag 5:** (GLOBAL) TIPS CONTRACT # 230301 **Options:** SHW-1-SHADOW SHW ~02-GRADE 02 ~ALLF-GRADE 02 A13F-ALLANTE FREE (GLOBAL) TBL-F-BLACK FRAME TBL	673.00	54.00	3	309.58	928.74 T

The Norman Company, Inc.
7600 Ball Road
Fort Smith, AR 72908
Phone: 479-424-1600
Fax: 479-424-2471
Email/Web:
www.normancompany.com

Quotation

Project: 3547
Proj Desc: City of Fay. - Drake Field Con course
Quote: 3547.001
Status: New

Sold To: 42-00
City of Fayetteville
113 W. Mountain
Fayetteville, AR 72701
Attention: Quin Thompson

Bill To: 42-00
City of Fayetteville
113 W. Mountain
Fayetteville, AR 72701
Attention: Quin Thompson

Ship To: 42-09
City of Fayetteville
Drake Field
4500 S. School Ave.
Fayetteville, AR 72701
Attention: Jared Rabren
Email: jrabren@fayetteville-ar.org

Date Entered	Salesperson	FOB	Terms
03/17/2026	Jim Hanson	D	Upon Receipt

Line	Item Number	MFG	Description	Unit List	%	Qty	Unit Price	Extended
			BG-C-BLACK NYLON GLIDE ~STD-COMMERCIAL FURNITURE OFFERING					
21	TYBA-3696-NNNNNG7A	HAWORTH	**CULTIVATE,BASE ONLY,36DX96W,GLD,39.5H,PTD** **Tag 1:** CAFE **Tag 5:** OMNIA CONTRACT #2020000606 **Options:** ,TR-F-BLACK, GRADE A	2,695.19	58.00	1	1,131.98	1,131.98 T
26	TYRA-36D4-LJSN	HAWORTH	**CULTIVATE,RECT,36DX134W,LAM,EB3,STD CORE,NO CUTOUT** **Tag 1:** CAFE **Tag 5:** OMNIA CONTRACT #2020000606 **Options:** ,H-D2-MOCHA MODERN CHERRY, GRADE B ,HP-8J-CHARCOAL, GRADE A	1,192.43	58.00	1	500.82	500.82 T
			LOBBY					
9	R5BSNPU	GLOBAL	**BAR HEIGHT STOOL, ARMLESS, FABRIC SEAT & POLYPROPYLENE BACK, STD 4 LEGGED BASE, GLIDES, STACKS 5 HIGH ON FLOOR** **Tag 1:** LOBBY **Tag 5:** (GLOBAL) TIPS CONTRACT #230301 **Options:** SHW-1-SHADOW SHW ~02-GRADE 02 ~ALLF-GRADE 02 A13F-ALLANTE FREE (GLOBAL) TBL-F-BLACK FRAME TBL BG-C-BLACK NYLON GLIDE ~STD-COMMERCIAL FURNITURE OFFERING	791.00	54.00	9	363.86	3,274.74 T
13	STP-P26-TF	HAWORTH	**PIP TABLE, 26H, SOFT GLIDE, PTD MDF** **Tag 1:** LOBBY **Tag 5:** OMNIA CONTRACT #2020000606 **Options:** ,PW-AK-CHALK, GRADE A ,TR-F-BLACK, GRADE A	871.62	53.00	3	409.66	1,228.98 T
15	TCRN-2424-LJSNXG1A	HAWORTH	**JIVE,TBL,RD,LAM,24"X24",EB3,STD,CO:NONE,X,GLD,16"H,PTD** **Tag 1:** LOBBY **Tag 5:** OMNIA CONTRACT #2020000606 **Options:** ,H-WL-LINEN, GRADE A ,HP-WL-LINEN, GRADE A ,TR-TF-PITCH (TEXTURED), GRADE A	726.16	50.00	3	363.08	1,089.24 T
18	TCRN-3030-LJSNXG1A	HAWORTH	**JIVE,TBL,RD,LAM,30"X30",EB3,STD,CO:NONE,X,GLD,16"H,PTD** **Tag 1:** LOBBY **Tag 5:** OMNIA CONTRACT #2020000606 **Options:** ,H-WL-LINEN, GRADE A ,HP-WL-LINEN, GRADE A ,TR-TF-PITCH (TEXTURED), GRADE A	805.36	50.00	1	402.68	402.68 T
19	TCRN-4242-LJSNXG1A	HAWORTH	**JIVE,TBL,RD,LAM,42"X42",EB3,STD,CO:NONE,X,GLD,16"H,PTD** **Tag 1:** LOBBY	1,133.31	50.00	5	566.66	2,833.30 T

The Norman Company, Inc.
7600 Ball Road
Fort Smith, AR 72908
Phone: 479-424-1600
Fax: 479-424-2471
Email/Web:
www.normancompany.com

Quotation

Project: 3547
Proj Desc: City of Fay. - Drake Field Con course
Quote: 3547.001
Status: New

Sold To: 42-00
City of Fayetteville
113 W. Mountain
Fayetteville, AR 72701
Attention: Quin Thompson

Bill To: 42-00
City of Fayetteville
113 W. Mountain
Fayetteville, AR 72701
Attention: Quin Thompson

Ship To: 42-09
City of Fayetteville
Drake Field
4500 S. School Ave.
Fayetteville, AR 72701
Attention: Jared Rabren
Email: jrabren@fayetteville-ar.org

Date Entered	Salesperson	FOB	Terms
03/17/2026	Jim Hanson	D	Upon Receipt

Line	Item Number	MFG	Description	Unit List	%	Qty	Unit Price	Extended
			Tag 5: OMNIA CONTRACT #2020000606					
			Options: ,H-D2-MOCHA MODERN CHERRY, GRADE B ,HP-8J-CHARCOAL, GRADE A ,TR-TF-PITCH (TEXTURED), GRADE A					
22	TYBA-3696-NNNNNG7A	HAWORTH	**CULTIVATE,BASE ONLY,36DX96W,GLD,39.5H,PTD**	2,695.19	58.00	1	1,131.98	1,131.98 T
			Tag 1: LOBBY					
			Tag 5: OMNIA CONTRACT #2020000606					
			Options: ,TR-F-BLACK, GRADE A					
23	TYRA-36C2-LJSN	HAWORTH	**CULTIVATE,RECT,36DX122W,LAM,EB3,STD CORE,NO CUTOUT**	1,125.29	58.00	1	472.62	472.62 T
			Tag 1: LOBBY					
			Tag 5: OMNIA CONTRACT #2020000606					
			Options: ,H-D2-MOCHA MODERN CHERRY, GRADE B ,HP-8J-CHARCOAL, GRADE A					
24	EUDB-0000-BB	HAWORTH	**ENH PWR MOD,BRKT,HZ,FXD,ABOVE WS ANGLED FACE CAB BCK,BLK**	98.96	48.75	2	50.72	101.44 T
			Tag 1: LOBBY					
			Tag 5: OMNIA CONTRACT #2020000606					
25	EUS1-PL0B-210010	HAWORTH	**ENHANCED,SEAMLESS,MODULE,EDGE MOUNT,CORDED- STRAIGHT,12FT. ,1 CIRCUIT,BLACK,2 RECEPTACLE,1 USB,NO DATA,NO CBL**	929.21	48.75	2	476.22	952.44 T
			Tag 1: LOBBY					
			Tag 5: OMNIA CONTRACT #2020000606					
27	S9C2-030-000H	HAWORTH	**CABANA,TWO SEAT COLLAB SOFA,BACK, BOTH ARMS,FAUX-LEA SEAT,PLASTIC GLD,**	5,746.85	53.00	1	2,701.02	2,701.02 T
			Tag 1: LOBBY					
			Tag 5: OMNIA CONTRACT #2020000606					
			Options: (XJ)-WELLINGTON ,XJ-LC-WELLINGTON - LUCID, GRADE A ,TR-F-BLACK, GRADE A					
28	S9C2-030-0P0H	HAWORTH	**CABANA,TWO SEAT COLLAB SOFA,BACK, BOTH ARMS,FAUX-LEA SEAT,INT TAB, MDF,PLASTIC GLD,**	6,391.94	53.00	8	3,004.21	24,033.68 T
			Tag 1: LOBBY					
			Tag 5: OMNIA CONTRACT #2020000606					
			Options: (XJ)-WELLINGTON ,XJ-LC-WELLINGTON - LUCID, GRADE A ,TR-F-BLACK, GRADE A ,PW-PL-POLAR, GRADE A					
29	S9C2-030-600H	HAWORTH	**CABANA,TWO SEAT COLLAB SOFA,BACK, BOTH ARMS,FAUX-LEA SEAT,PWR-USB B BLK,PLASTIC GLD,**	6,648.45	53.00	1	3,124.77	3,124.77 T
			Tag 1: LOBBY					
			Tag 5: OMNIA CONTRACT #2020000606					
			Options: (XJ)-WELLINGTON ,XJ-LC-WELLINGTON - LUCID, GRADE A ,TR-F-BLACK, GRADE A					

The Norman Company, Inc.
7600 Ball Road
Fort Smith, AR 72908
Phone: 479-424-1600
Fax: 479-424-2471
Email/Web:
www.normancompany.com

Quotation

Project: 3547
Proj Desc: City of Fay. - Drake Field Con course
Quote: 3547.001
Status: New

Sold To: 42-00
City of Fayetteville
113 W. Mountain
Fayetteville, AR 72701
Attention: Quin Thompson

Bill To: 42-00
City of Fayetteville
113 W. Mountain
Fayetteville, AR 72701
Attention: Quin Thompson

Ship To: 42-09
City of Fayetteville
Drake Field
4500 S. School Ave.
Fayetteville, AR 72701
Attention: Jared Rabren
Email: jrabren@fayetteville-ar.org

Date Entered	Salesperson	FOB	Terms
03/17/2026	Jim Hanson	D	Upon Receipt

Line	Item Number	MFG	Description	Unit List	%	Qty	Unit Price	Extended
30	S9C2-030-6P0H	HAWORTH	**CABANA,TWO SEAT COLLAB SOFA,BACK, BOTH ARMS,FAUX-LEA SEAT,PWR-USB B BLK,INT TAB, MDF,PLASTIC GLD,** **Tag 1:** LOBBY **Tag 5:** OMNIA CONTRACT #2020000606 **Options:** (XJ)-WELLINGTON ,XJ-LC-WELLINGTON - LUCID, GRADE A ,TR-F-BLACK, GRADE A ,PW-PL-POLAR, GRADE A	7,293.54	53.00	1	3,427.96	3,427.96 T
33	S9EL-L32-000H	HAWORTH	**CABANA,CHAISE RETREAT,BACK, LEFT ARM,LOW SCRN,FAUX-LEA ST,FAB SCRN,PLAST GLD,** **Tag 1:** LOBBY **Tag 5:** OMNIA CONTRACT #2020000606 **Options:** (XJ)-WELLINGTON ,XJ-LC-WELLINGTON - LUCID, GRADE A (4Z)-ELEMENT ,4Z-LY-ELEMENT - LYRICAL, GRADE B ,TR-F-BLACK, GRADE A	11,032.01	53.00	1	5,185.04	5,185.04 T
35	S9L2-030-000H	HAWORTH	**CABANA,INDIVIDUAL LOUNGE,BACK, BOTH ARMS,FAUX-LEA SEAT,PLASTIC GLD** **Tag 1:** LOBBY **Tag 5:** OMNIA CONTRACT #2020000606 **Options:** (XJ)-WELLINGTON ,XJ-LC-WELLINGTON - LUCID, GRADE A ,TR-F-BLACK, GRADE A	3,774.24	53.00	10	1,773.89	17,738.90 T
37	S9L2-030-400H	HAWORTH	**CABANA,INDIVIDUAL LOUNGE,BACK, BOTH ARMS,FAUX-LEA SEAT,PWR-USB R BLK,PLASTIC GLD** **Tag 1:** LOBBY **Tag 5:** OMNIA CONTRACT #2020000606 **Options:** (XJ)-WELLINGTON ,XJ-LC-WELLINGTON - LUCID, GRADE A ,TR-F-BLACK, GRADE A	4,225.04	53.00	2	1,985.77	3,971.54 T
39	S9L2-030-500H	HAWORTH	**CABANA,INDIVIDUAL LOUNGE,BACK, BOTH ARMS,FAUX-LEA SEAT,PWR-USB L BLK,PLASTIC GLD** **Tag 1:** LOBBY **Tag 5:** OMNIA CONTRACT #2020000606 **Options:** (XJ)-WELLINGTON ,XJ-LC-WELLINGTON - LUCID, GRADE A ,TR-F-BLACK, GRADE A	4,225.04	53.00	2	1,985.77	3,971.54 T
41	S9L2-L32-000H	HAWORTH	**CABANA,INDIVIDUAL LOUNGE,BACK, BOTH ARMS,LOW SCREEN,FAUX-LEA SEAT,FAB SCREEN,PLASTIC GLD** **Tag 1:** LOBBY **Tag 5:** OMNIA CONTRACT #2020000606 **Options:** (XJ)-WELLINGTON ,XJ-LC-WELLINGTON - LUCID, GRADE A (4Z)-ELEMENT ,4Z-PT-ELEMENT - POETIC, GRADE B ,TR-F-BLACK, GRADE A	6,256.72	53.00	3	2,940.66	8,821.98 T

The Norman Company, Inc.
7600 Ball Road
Fort Smith, AR 72908
Phone: 479-424-1600
Fax: 479-424-2471
Email/Web:
www.normancompany.com

Quotation

Project: 3547
Proj Desc: City of Fay. - Drake Field Con course
Quote: 3547.001
Status: New

Sold To: 42-00
City of Fayetteville
113 W. Mountain
Fayetteville, AR 72701
Attention: Quin Thompson

Bill To: 42-00
City of Fayetteville
113 W. Mountain
Fayetteville, AR 72701
Attention: Quin Thompson

Ship To: 42-09
City of Fayetteville
Drake Field
4500 S. School Ave.
Fayetteville, AR 72701
Attention: Jared Rabren
Email: jrabren@fayetteville-ar.org

Date Entered	Salesperson	FOB	Terms
03/17/2026	Jim Hanson	D	Upon Receipt

Line	Item Number	MFG	Description	Unit List	%	Qty	Unit Price	Extended
			LOUNGE					
10	R5BSNPU	GLOBAL	**BAR HEIGHT STOOL, ARMLESS, FABRIC SEAT & POLYPROPYLENE BACK, STD 4 LEGGED BASE, GLIDES, STACKS 5 HIGH ON FLOOR** **Tag 1:** LOUNGE **Tag 5:** (GLOBAL) TIPS CONTRACT #230301 **Options:** SHW-1-SHADOW SHW ~02-GRADE 02 ~ALLF-GRADE 02 A13F-ALLANTE FREE (GLOBAL) TBL-F-BLACK FRAME TBL BG-C-BLACK NYLON GLIDE ~STD-COMMERCIAL FURNITURE OFFERING	791.00	54.00	4	363.86	1,455.44 T
14	STP-P26-TF	HAWORTH	**PIP TABLE, 26H, SOFT GLIDE, PTD MDF** **Tag 1:** LOUNGE **Tag 5:** OMNIA CONTRACT #2020000606 **Options:** ,PW-AK-CHALK, GRADE A ,TR-F-BLACK, GRADE A	871.62	53.00	3	409.66	1,228.98 T
16	TCRN-2424-LJSNXG1A	HAWORTH	**JIVE,TBL,RD,LAM,24"X24",EB3,STD,CO:NO NE,X,GLD,16"H,PTD** **Tag 1:** LOUNGE **Tag 5:** OMNIA CONTRACT #2020000606 **Options:** ,H-WL-LINEN, GRADE A ,HP-WL-LINEN, GRADE A ,TR-TF-PITCH (TEXTURED), GRADE A	726.16	50.00	2	363.08	726.16 T
17	TCRN-3030-LJSNXC7A	HAWORTH	**JIVE,TBL,RD,LAM,30"X30",EB3,STD,CO:NO NE,X,CSTR,42"H,PTD** **Tag 1:** LOUNGE **Tag 5:** OMNIA CONTRACT #2020000606 **Options:** ,H-WL-LINEN, GRADE A ,HP-WL-LINEN, GRADE A ,TR-TF-PITCH (TEXTURED), GRADE A	872.27	50.00	2	436.14	872.28 T
20	TCRN-4242-LJSNXG1A	HAWORTH	**JIVE,TBL,RD,LAM,42"X42",EB3,STD,CO:NO NE,X,GLD,16"H,PTD** **Tag 1:** LOUNGE **Tag 5:** OMNIA CONTRACT #2020000606 **Options:** ,H-D2-MOCHA MODERN CHERRY, GRADE B ,HP-8J-CHARCOAL, GRADE A ,TR-TF-PITCH (TEXTURED), GRADE A	1,133.31	50.00	1	566.66	566.66 T
31	S9C2-L32-0P0H	HAWORTH	**CABANA,TWO SEAT COLLAB SOFA,BACK, BOTH ARMS,LOW SCREEN,FAUX-LEA SEAT,FAB SCREEN,INT TAB, MDF,PLASTIC GLD,** **Tag 1:** LOUNGE **Tag 5:** OMNIA CONTRACT #2020000606 **Options:** (XJ)-WELLINGTON ,XJ-LC-WELLINGTON - LUCID, GRADE A (4Z)-ELEMENT ,4Z-LY-ELEMENT - LYRICAL, GRADE B ,TR-F-BLACK, GRADE A ,PW-PL-POLAR, GRADE A	9,168.23	53.00	1	4,309.07	4,309.07 T

The Norman Company, Inc.
7600 Ball Road
Fort Smith, AR 72908
Phone: 479-424-1600
Fax: 479-424-2471
Email/Web:
www.normancompany.com

Quotation

Project: 3547
Proj Desc: City of Fay. - Drake Field Con course
Quote: 3547.001
Status: New

Sold To: 42-00
City of Fayetteville
113 W. Mountain
Fayetteville, AR 72701
Attention: Quin Thompson

Bill To: 42-00
City of Fayetteville
113 W. Mountain
Fayetteville, AR 72701
Attention: Quin Thompson

Ship To: 42-09
City of Fayetteville
Drake Field
4500 S. School Ave.
Fayetteville, AR 72701
Attention: Jared Rabren
Email: jrabren@fayetteville-ar.org

Date Entered	Salesperson	FOB	Terms
03/17/2026	Jim Hanson	D	Upon Receipt

Line	Item Number	MFG	Description	Unit List	%	Qty	Unit Price	Extended
32	S9C2-L32-600H	HAWORTH	**CABANA,TWO SEAT COLLAB SOFA,BACK, BOTH ARMS,LOW SCREEN,FAUX-LEA SEAT,FAB SCREEN,PWR-USB B BLK,PLASTIC GLD,** **Tag 1:** LOUNGE **Tag 5:** OMNIA CONTRACT #2020000606 **Options:** (XJ)-WELLINGTON ,XJ-LC-WELLINGTON - LUCID, GRADE A (4Z)-ELEMENT ,4Z-LY-ELEMENT - LYRICAL, GRADE B ,TR-F-BLACK, GRADE A	9,424.74	53.00	1	4,429.63	4,429.63 T
34	S9EL-L32-000H	HAWORTH	**CABANA,CHAISE RETREAT,BACK, LEFT ARM,LOW SCRN,FAUX-LEA ST,FAB SCRN,PLAST GLD,** **Tag 1:** LOUNGE **Tag 5:** OMNIA CONTRACT #2020000606 **Options:** (XJ)-WELLINGTON ,XJ-LC-WELLINGTON - LUCID, GRADE A (4Z)-ELEMENT ,4Z-LY-ELEMENT - LYRICAL, GRADE B ,TR-F-BLACK, GRADE A	11,032.01	53.00	1	5,185.04	5,185.04 T
36	S9L2-030-000H	HAWORTH	**CABANA,INDIVIDUAL LOUNGE,BACK, BOTH ARMS,FAUX-LEA SEAT,PLASTIC GLD** **Tag 1:** LOUNGE **Tag 5:** OMNIA CONTRACT #2020000606 **Options:** (XJ)-WELLINGTON ,XJ-LC-WELLINGTON - LUCID, GRADE A ,TR-F-BLACK, GRADE A	3,774.24	53.00	4	1,773.89	7,095.56 T
38	S9L2-030-400H	HAWORTH	**CABANA,INDIVIDUAL LOUNGE,BACK, BOTH ARMS,FAUX-LEA SEAT,PWR-USB R BLK,PLASTIC GLD** **Tag 1:** LOUNGE **Tag 5:** OMNIA CONTRACT #2020000606 **Options:** (XJ)-WELLINGTON ,XJ-LC-WELLINGTON - LUCID, GRADE A ,TR-F-BLACK, GRADE A	4,225.04	53.00	1	1,985.77	1,985.77 T
40	S9L2-030-500H	HAWORTH	**CABANA,INDIVIDUAL LOUNGE,BACK, BOTH ARMS,FAUX-LEA SEAT,PWR-USB L BLK,PLASTIC GLD** **Tag 1:** LOUNGE **Tag 5:** OMNIA CONTRACT #2020000606 **Options:** (XJ)-WELLINGTON ,XJ-LC-WELLINGTON - LUCID, GRADE A ,TR-F-BLACK, GRADE A	4,225.04	53.00	3	1,985.77	5,957.31 T
			ALL OTHER					
43	INST	CREATIVE O	**RECEIVE, DELIVER, AND INSTALL PRODUCT**	6,800.00	.00	1	6,800.00	6,800.00 T
44	DESIGN FEE	NORMANCO	**DESIGN LAYOUT AND RENDERINGS**	500.00	.00	1	500.00	500.00 T

The Norman Company, Inc.
7600 Ball Road
Fort Smith, AR 72908
Phone: 479-424-1600
Fax: 479-424-2471
Email/Web:
www.normancompany.com

Quotation

Project: 3547
Proj Desc: City of Fay. - Drake Field Con course
Quote: 3547.001
Status: New

Sold To: 42-00
City of Fayetteville
113 W. Mountain
Fayetteville, AR 72701
Attention: Quin Thompson

Bill To: 42-00
City of Fayetteville
113 W. Mountain
Fayetteville, AR 72701
Attention: Quin Thompson

Ship To: 42-09
City of Fayetteville
Drake Field
4500 S. School Ave.
Fayetteville, AR 72701
Attention: Jared Rabren
Email: jrabren@fayetteville-ar.org

Date Entered	Salesperson	FOB	Terms
03/17/2026	Jim Hanson	D	Upon Receipt

Line	Item Number	MFG	Description	Unit List	%	Qty	Unit Price	Extended

Subtotal	143,084.97
Total Tax:	13,950.77
TOTAL AMOUNT - USD	**157,035.74**
Deposit Required:	**78,517.87**

This Quote will expire on: July 31, 2026

TERMS AND CONDITIONS

Terms & Conditions applicable to quotations, proposals, invoices and drawings

1. AGREEMENT: A signed purchase order issued in good faith or a signed copy of a Norman Company proposal by the purchaser is considered a firm binding order, not subject to cancellation.
2. DEPOSITS: All orders must be accompanied by fifty percent (50%) deposit. No interest will be paid on deposits.
3. CANCELLATION: It is agreed and understood by purchaser that any order cannot be cancelled, except by mutual consent. Any changes in an order are subject to approval by the seller and manufacturer. Any additional charges resulting from changes will be paid by the purchaser. All changes shall be delivered to the seller in writing by the purchaser.
4. DRAWINGS: All drawings are property of Norman Company and are not to be used, shared, sent or modified without the express consent of Norman Company. Any changes to the drawings upon installation are subject to additional charges.
5. STORAGE: In the event purchaser s premises are not ready to receive any shipment on its scheduled deliver date, Norman Company will provide warehousing and will receive as additional compensation an amount equal to one percent (1%) per month of the selling price of all items stored over 14 days plus any additional handling and/or delivery costs.
6. DELIVERY: All work, delivery and installation shall be performed on normal business days (Monday through Friday) between the hours of 8:00 a.m. and 5:00 p.m. Purchaser shall bear any additional costs incurred by Norman Company resulting from overtime work furnished at purchaser s request.
7. ACCEPTANCE: All goods shall be inspected and accepted or rejected by purchaser upon delivery. Written notice of all defects, missing items or other improper delivery will be provided by purchaser to Norman Company within two (2) business days.
8. PAYMENT: Acceptance of delivery constitutes acceptance of merchandise as delivered. Merchandise will be invoiced upon delivery. Purchaser agrees to pay every invoice according to terms listed on the invoice. Invoices will be payable upon receipt unless a credit application has been submitted and approved or prior written arrangements have been agreed to by Norman Company. All credit card payments will be charged an additional 2.0% fee. Partial shipments may be billed as merchandise is delivered or stored. Items damaged or incorrect may be withheld from payment until complete.
9. TAXES: All invoices will include appropriate sales tax unless sales tax exemption is provided by purchaser before final invoice is generated.

GOVERNING LAW: All purchase orders, quotations, proposals and invoices will be interpreted in accordance with the laws of the State of Arkansas.

Buyer hereby grants and assigns to Norman Company Inc., a continuing purchase money security interest in and a lien upon all of the Buyer s right, title and interest in and to the products described in the attached proposal (the Collateral) to secure the prompt payment, performance and observance of all indebtedness, obligations, liabilities and agreements of any kind of the Buyer to Norman Company, Inc., however evidenced, now existing or hereafter arising in connection with the purchase of the Collateral from Norman Company, Inc.

Please sign below to acknowledge acceptance of this proposal subject to the Terms and Conditions included above. By signature, you are confirming that you are authorized to execute this agreement.

The Norman Company, Inc.
7600 Ball Road
Fort Smith, AR 72908
Phone: 479-424-1600
Fax: 479-424-2471
Email/Web:
www.normancompany.com

Quotation

Project: 3547
Proj Desc: City of Fay. - Drake Field Con course
Quote: 3547.001
Status: New

Sold To: 42-00
City of Fayetteville
113 W. Mountain
Fayetteville, AR 72701
Attention: Quin Thompson

Bill To: 42-00
City of Fayetteville
113 W. Mountain
Fayetteville, AR 72701
Attention: Quin Thompson

Ship To: 42-09
City of Fayetteville
Drake Field
4500 S. School Ave.
Fayetteville, AR 72701
Attention: Jared Rabren
Email: jrabren@fayetteville-ar.org

Date Entered	Salesperson	FOB	Terms
03/17/2026	Jim Hanson	D	Upon Receipt

Subtotal	143,084.97
Total Tax:	13,950.77
Total	**157,035.74**

PRINT NAME _____ **TITLE** _____

SIGNATURE _____ **DATE** _____

CITY OF FAYETTEVILLE ARKANSAS

CITY COUNCIL MEMO
2026-1754

MEETING OF JUNE 16, 2026

TO: Mayor Rawn and City Council

THROUGH: Brad Hardin, Fire Chief

FROM: Granville Wynn, Fire Operations Manager

SUBJECT: **Approval of a resolution to purchase Air Compressor and Fill Station Parts for Fire Station from Siddons-Martin via the Houston-Galveston Area Council (HGAC) Cooperative Contract #EE11-24 at a cost of $55,614.25 plus associated Sales Tax (Total: $61,036.64).**

RECOMMENDATION:
Approval of a resolution to purchase Air Compressor and Fill Station Parts for Fire Station from Siddons-Martin via the Houston-Galveston Area Council (HGAC) Cooperative Contract #EE11-24 at a cost of $55,614.25 plus associated Sales Tax (Total: $61,036.64).

BACKGROUND:
Our Department has identified HGAC Cooperative Purchasing from Siddons-Martin as the most cost-effective manner to purchase the Air Compressor and Fill Station Parts at this time. The Air Compressor and Self-Contained Breathing Apparatus (SCBA) fill station is essential for keeping firefighters supplied with clean, high-pressure breathing air, enabling rapid response, reducing operational delays, and supporting both station-based and on-scene firefighting needs.

DISCUSSION:
Purchasing through the cooperative agreement will enable us to obtain the Firefighting Supplies/Equipment at a reduced cost to the City.

BUDGET/STAFF IMPACT:
Existing ACT 833 funds have been allocated into the firefighting supplies general ledger account Project #33047.1 to allow the funding for the current purchase at a cost with estimated sales tax at $61,036.64.

ATTACHMENTS: 3. Staff Review Form, 4. Vendor Quote, 5. Cooperative Contract Agreement with Siddons Martin Emergency Group LLC

113 West Mountain Street
Fayetteville, AR 72701
(479) 575-8323

File #: 2026-1754

A RESOLUTION TO APPROVE THE PURCHASE OF AN AIR COMPRESSOR AND FILL STATION PARTS FROM SIDDONS-MARTIN IN THE TOTAL AMOUNT OF $61,036.64 PURSUANT TO A HOUSTON-GALVESTON AREA COUNCIL COOPERATIVE PURCHASING CONTRACT

BE IT RESOLVED BY THE CITY COUNCIL OF THE CITY OF FAYETTEVILLE, ARKANSAS:

Section 1: That the City Council of the City of Fayetteville, Arkansas hereby authorizes the purchase of an air compressor and Self-Contained Breathing Apparatus fill station parts from Siddons-Martin in the total amount of $61,036.64 pursuant to a Houston-Galveston Area Council cooperative purchasing contract.

City of Fayetteville Staff Review Form

2026-1754

Item ID

6/16/2026

City Council Meeting Date - Agenda Item Only
N/A for Non-Agenda Item

Brad Hardin	5/13/2026	FIRE (300)
Submitted By	**Submitted Date**	**Division / Department**

Action Recommendation:

Approval of a resolution to purchase Air Compressor and Fill Station Parts for Fire Station from Siddons-Martin via the Houston-Galvestion Area Council (HGAC) Cooperative Contract #EE11-24 at a cost of $55,614.25 plus associated Sales Tax (Total: $61,036.64).

Budget Impact:

1010.300.3020-5218.00	General
Account Number	Fund
33047.1	Fire Department Act 833
Project Number	Project Title

Budgeted Item?	Yes	Total Amended Budget	$	84,833.00
		Expenses (Actual+Encum)	$	3,546.66
		Available Budget	$	81,286.34
Does item have a direct cost?	Yes	Item Cost	$	61,036.64
Is a Budget Amendment attached?	No	Budget Amendment	$	-
		Remaining Budget	$	20,249.70

Purchase Order Number: _____

Previous Ordinance or Resolution # _____

Change Order Number: _____

Approval Date: _____

Original Contract Number: _____

Comments:

Siddons-Martin Emergency Group
1506 I-35W
Denton, TX, 76201
USA
Phone:

ESTIMATE

DO NOT PAY

Customer Info:

Fayetteville Fire Dept. (AR)
303 West Center St.
Fayetteville, AR, 72701
USA

Document Info:

Quote #: 700-0046473
Taken By: David Winter
Expiration Date: 06/25/2026

Item #	Description	Quantity / Unit	Unit Price	Amount
241961	ARC-E4-10A6E1 w/ CO MONITOR 4 STAGE 6000 PS 10 HP14 CFM SINGLE PHASE ELECTRIC MOTOR SOUND SUPPRESSING CABINET w/ FILTER SYSTEM TO PROCESS 24,000 CU FT. MAGNETIC TARTER AUTO DRAIN SYSTEM GAUGE PANEL HIGH-PRESSURE SWITCH & ELECTRONIC CO MONITOR C-E4-10-A6-E1C	1.00 / EA	30,417.87	30,417.87
241942	ARC-6000PSI UN STORAGE CYLINDER C-6000-UN	4.00 / EA	1,823.52	7,294.08
242899	SCB-FOUR CYLINDER SELF STANDING VERTICAL RACK STRAIGHT CONFIG BLUE SCR-4DV	1.00 / EA	1,000.00	1,000.00
241770	ARC-CGA-702 N&N w/ JIC ELBOW I1350	4.00 / EA	66.43	265.72
241749	ARC-ARCTIC COMP HOSE 120" (10') 7000 PSI w/ENDS A-H1000-0120	1.00 / EA	125.33	125.33
241748	ARCTIC COMP HOSE 48 IN A-H1000-0048	4.00 / EA	54.25	217.00
357404	MAX-TWO 2 PLACE 5500 PSI FILL STATION W FILL HOSES FITTINGS & BLEEDER VALVES FS-5052-2-S	1.00 / EA	8,661.25	8,661.25
357414	MAX-FILL PANEL FOR 5500PSI FILL STATION ACPANEL 4X2 5500	1.00 / EA	4,715.00	4,715.00

Siddons-Martin Emergency Group
1506 I-35W
Denton, TX, 76201
USA
Phone:

ESTIMATE

DO NOT PAY

Document Info:
Quote #: 700-0046473

300312	DELIVERY/ INSTALL OF COMPRESSOR SMEG-COMPRESSRINSTLL	1.00 / EA	1,860.00	1,860.00
300211	HGAC # EE11-24 Emergency Medical, Safety, and Rescue Equipment HGAC# EE11-24	1.00 / EA	0.00	0.00
300056	FREIGHT FREIGHT	1.00 / EA	1,058.00	1,058.00

For complete terms and conditions please visit our website :
https://www.siddons-martin.com
Link

Total of All Services

Labor total	$1,860.00	Shop supplies	$0.00
Parts total	$52,696.25	Sublet total	$0.00
Freight total	$ 1,058.00	Core charges	$0.00
		Sales tax	$5422.39

Total: $61,036.64

Docusign Envelope ID: EA4D9790-70A1-4C6E-89A3-6957C4F66B17

MASTER GENERAL PROVISIONS

This Master Agreement is made and entered into, by and between the Houston-Galveston Area Council hereinafter referred to as H-GAC having its principal place of business at 3555 Timmons Lane, Suite 120, Houston, Texas 77027 and Siddons Martin Emergency Group LLC, hereinafter referred to as the Contractor, having its principal place of business at 1362 E Richey Road, Houston, TX 77073.

WITNESSETH:

WHEREAS, H-GAC hereby engages the Contractor to perform certain services in accordance with the specifications of the Master Agreement; and

WHEREAS, the Contractor has agreed to perform such services in accordance with the specifications of the Master Agreement;

NOW, THEREFORE, H-GAC and the Contractor do hereby agree as follows:

ARTICLE 1: LEGAL AUTHORITY

The Contractor warrants and assures H-GAC that it possesses adequate legal authority to enter into this Master Agreement. The Contractor's governing body, where applicable, has authorized the signatory official(s) to enter into this Master Agreement and bind the Contractor to the terms of this Master Agreement and any subsequent amendments hereto.

ARTICLE 2: APPLICABLE LAWS

The Contractor agrees to conduct all activities under this Master Agreement in accordance with all federal laws, executive orders, policies, procedures, applicable rules, regulations, directives, standards, ordinances, and laws, in effect or promulgated during the term of this Master Agreement, including without limitation, workers' compensation laws, minimum and maximum salary and wage statutes and regulations, and licensing laws and regulations. When required, the Contractor shall furnish H-GAC with satisfactory proof of its compliance therewith.

ARTICLE 3: PUBLIC INFORMATION

Except as stated below, all materials submitted to H-GAC, including any attachments, appendices, or other information submitted as a part of a submission or Master Agreement, are considered public information, and become the property of H-GAC upon submission and may be reprinted, published, or distributed in any manner by H-GAC according to open records laws, requirements of the US Department of Labor and the State of Texas, and H-GAC policies and procedures. In the event the Contractor wishes to claim portions of the response are not subject to the Texas Public Information Act, it shall so; however, the determination of the Texas Attorney General as to whether such information must be disclosed upon a public request shall be binding on the Contractor. H-GAC will request such a determination only if Contractor bears all costs for preparation of the submission. H-GAC is not responsible for the return of creative examples of work submitted. H-GAC will not be held accountable if material from submissions is obtained without the written consent of the contractor by parties other than H-GAC, at any time during the evaluation process.

ARTICLE 4: INDEPENDENT CONTRACTOR

The execution of this Master Agreement and the rendering of services prescribed by this Master Agreement do not change the independent status of H-GAC or the Contractor. No provision of this Master Agreement or act of H-GAC in performance of the Master Agreement shall be construed as making the Contractor the agent, servant, or

Docusign Envelope ID: EA4D9790-70A1-4C6E-89A3-6957C4F66B17

employee of H-GAC, the State of Texas, or the United States Government. Employees of the Contractor are subject to the exclusive control and supervision of the Contractor. The Contractor is solely responsible for employee related disputes and discrepancies, including employee payrolls and any claims arising therefrom.

ARTICLE 5: ANTI-COMPETITIVE BEHAVIOR

Contractor will not collude, in any manner, or engage in any practice which may restrict or eliminate competition or otherwise restrain trade.

ARTICLE 6: SUSPENSION AND DEBARMENT

Debarment and Suspension (Executive Orders 12549 and 12689) – A contract award (2 CFR 180.220) must not be made to parties listed on the government-wide exclusions in the System for Award Management (SAM), in accordance with the OMB guidelines at 2 CFR 180 that implement Executive Orders 12549 (3 CFR Part 1966 Comp. p. 189) and 12689 (3 CFR Part 1989 Comp. p. 235), "Debarment and Suspension." SAM Exclusions contains the names of parties debarred, suspended, or otherwise excluded by agencies, as well as parties declared ineligible under statutory or regulatory authority other than Executive Order 12549.

Pursuant to the Federal Rule above, Respondent certifies that neither it nor its principals are presently debarred, suspended, proposed for debarment, declared ineligible, or voluntarily excluded from participation by any federal department or agency or by the State of Texas and at all times during the term of the Contract neither it nor its principals will be debarred, suspended, proposed for debarment, declared ineligible, or voluntarily excluded from participation by any federal department or agency or by the State of Texas Respondent shall immediately provide the written notice to H-GAC if at any time the Respondent learns that this certification was erroneous when submitted or has become erroneous by reason of changed circumstances. H-GAC may rely upon a certification of the Respondent that the Respondent is not debarred, suspended, ineligible, or voluntarily excluded from the covered contract, unless the H-GAC knows the certification is erroneous.

ARTICLE 7: GOAL FOR CONTRACTING WITH SMALL AND MINORITY BUSINESSES, WOMEN'S BUSINESS ENTERPRISES, AND LABOR SURPLUS AREA FIRMS (if subcontracts are to be let)

H-GAC's goal is to assure that small and minority businesses, women's business enterprises, and labor surplus area firms are used when possible in providing services under a contract. In accordance with federal procurements requirements of 2 CFR §200.321, if subcontracts are to be let, the prime contractor must take the affirmative steps listed below:

1. Placing qualified small and minority businesses and women's business enterprises on solicitation lists;
2. Assuring that small and minority businesses and women's business enterprises are solicited whenever they are potential sources;
3. Dividing total requirements, when economically feasible, into smaller task or quantities to permit maximum participation by small and minority businesses, and women's business enterprises;
4. Establishing delivery schedules, where the requirement permits, which encourage participation by small and minority businesses, and women's business enterprises;
5. Using the services and assistance as appropriate, of such organizations as the Small Business Administration and the Minority Business Development Agency of the Department of Commerce.
6.

Nothing in this provision will be construed to require the utilization of any firm that is either unqualified or unavailable. The Small Business Administration (SBA) is the primary reference and database for information on requirements related to Federal Subcontracting https://www.sba.gov/federal-contracting/contracting-guide/prime-subcontracting

NOTE: The term DBE as used in this solicitation is understood to encompass all programs/business enterprises such as: Small Disadvantaged Business (SDB), Historically Underutilized Business (HUB), Minority Owned Business Enterprise (MBE), Women Owned Business Enterprise (WBE) and Disabled Veteran Business Enterprise (DVBE) or other designation as issued by a certifying agency.

Contractor agrees to work with and assist HGACBuy customer in meeting any DBE targets and goals, as may be required by any rules, processes, or programs they might have in place. Assistance may include compliance with reporting requirements, provision of documentation, consideration of Certified/Listed

Docusign Envelope ID: EA4D9790-70A1-4C6E-89A3-6957C4F66B17

subcontractors, provision of documented evidence that an active participatory role for a DBE entity was considered in a procurement transaction, etc.

ARTICLE 8: SCOPE OF SERVICES

The services to be performed by the Contractor are outlined in an Attachment to this Master Agreement.

ARTICLE 9: PERFORMANCE PERIOD

This Master Agreement shall be performed during the period which begins Nov 01 2024 and ends Oct 31 2028. All services under this Master Agreement must be rendered within this performance period, unless directly specified under a written change or extension provisioned under Article 21, which shall be fully executed by both parties to this Master Agreement.

ARTICLE 10: PAYMENT OR FUNDING

Payment provisions under this Master Agreement are outlined in the Special Provisions. H-GAC will not pay for any expenses incurred prior to the execution date of a contract, or any expenses incurred after the termination date of the contract.

ARTICLE 11: PAYMENT FOR WORK

The H-GAC Customer is responsible for making payment to the Contractor upon delivery and acceptance of the goods or completion of the services and submission of the subsequent invoice.

ARTICLE 12: PAYMENT TERMS/PRE-PAYMENT/QUANTITY DISCOUNTS

If discounts for accelerated payment, pre-payment, progress payment, or quantity discounts are offered, they must be clearly indicated in the Contractor's submission prior to contract award. The applicability or acceptance of these terms is at the discretion of the Customer.

ARTICLE 13: REPORTING REQUIREMENTS

If the Contractor fails to submit to H-GAC in a timely and satisfactory manner any report required by this Master Agreement, or otherwise fails to satisfactorily render performances hereunder, H-GAC may terminate this Master Agreement with notice as identified in Article 29 of these General Provisions. H-GAC has final determination of the adequacy of performance and reporting by Contractor. Termination of this Master Agreement for failure to perform may affect Contractor's ability to participate in future opportunities with H-GAC. The Contractor's failure to timely submit any report may also be considered cause for termination of this Master Agreement. Any additional reporting requirements shall be set forth in the Special Provisions of this Master Agreement.

ARTICLE 14: INSURANCE

Contractor shall maintain insurance coverage for work performed or services rendered under this Master Agreement as outlined and defined in the attached Special Provisions.

ARTICLE 15: SUBCONTRACTS AND ASSIGNMENTS

Except as may be set forth in the Special Provisions, the Contractor agrees not to assign, transfer, convey, sublet, or otherwise dispose of this Master Agreement or any right, title, obligation, or interest it may have therein to any third party without prior written approval of H-GAC. The Contractor acknowledges that H-GAC is not liable to any subcontractor or assignee of the Contractor. The Contractor shall ensure that the performance rendered under all subcontracts shall result in compliance with all the terms and provisions of this Master Agreement as if the performance rendered was rendered by the Contractor. Contractor shall give all required notices, and comply with all laws and regulations applicable to furnishing and performance of the work. Except where otherwise expressly required by applicable law or regulation, H-GAC shall not be responsible for monitoring Contractor's compliance, or that of Contractor's subcontractors, with any laws or regulations.

ARTICLE 16: AUDIT

Notwithstanding any other audit requirement, H-GAC reserves the right to conduct or cause to be conducted an independent audit of any transaction under this Master Agreement, such audit may be performed by the H-GAC local government audit staff, a certified public accountant firm, or other auditors designated by H-GAC and will be conducted in accordance with applicable professional standards and practices. The Contractor understands and

Docusign Envelope ID: EA4D9790-70A1-4C6E-89A3-6957C4F66B17

agrees that the Contractor shall be liable to the H-GAC for any findings that result in monetary obligations to H-GAC.

ARTICLE 17: TAX EXEMPT STATUS

H-GAC and Customer members are either units of government or qualified non-profit agencies, and are generally exempt from Federal and State sales, excise or use taxes. Respondent must not include taxes in its Response. It is the responsibility of Contractor to determine the applicability of any taxes to an order and act accordingly. Exemption certificates will be provided upon request.

ARTICLE 18: EXAMINATION OF RECORDS

The Contractor shall maintain during the course of the work complete and accurate records of all of the Contractor's costs and documentation of items which are chargeable to H-GAC under this Master Agreement. H-GAC, through its staff or designated public accounting firm, the State of Texas, and United States Government, shall have the right at any reasonable time to inspect, copy and audit those records on or off the premises by authorized representatives of its own or any public accounting firm selected by H-GAC. The right of access to records is not limited to the required retention period, but shall last as long as the records are retained. Failure to provide access to records may be cause for termination of the Master Agreement. The records to be thus maintained and retained by the Contractor shall include (without limitation): (1) personnel and payroll records, including social security numbers and labor classifications, accounting for total time distribution of the Contractor's employees working full or part time on the work, as well as cancelled payroll checks, signed receipts for payroll payments in cash, or other evidence of disbursement of payroll payments; (2) invoices for purchases, receiving and issuing documents, and all other unit inventory records for the Contractor's stocks or capital items; and (3) paid invoices and cancelled checks for materials purchased and for subcontractors' and any other third parties' charges.

Contractor agrees that H-GAC will have the right, with reasonable notice, to inspect its records pertaining to purchase orders processed and the accuracy of the fees payable to H-GAC. The Contractor further agrees that the examination of records outlined in this article shall be included in all subcontractor or third-party Master Agreements.

ARTICLE 19: RETENTION OF RECORDS

The Contractor and its subcontractors shall maintain all records pertinent to this Master Agreement, and all other financial, statistical, property, participant records, and supporting documentation for a period of no less than seven (7) years from the later of the date of acceptance of the final payment or until all audit findings have been resolved. If any litigation, claim, negotiation, audit or other action involving the records has been started before the expiration of the retention period, the records shall be retained until completion of the action and resolution of all issues which arise from it, or until the end of the seven (7) years, whichever is later, and until any outstanding litigation, audit, or claim has been fully resolved.

ARTICLE 20: DISTRIBUTORS, VENDORS, RESELLERS

Contractor agrees and acknowledges that any such designations of distributors, vendors, resellers or the like are for the convenience of the Contractor only and the awarded Contractor will remain responsible and liable for all obligations under the Contract and the performance of any designated distributor, vendor, reseller, etc. Contractor is also responsible for receiving and processing any Customer purchase order in accordance with the Contract and forwarding of the Purchase Order to the designated distributor, vendor, reseller, etc. to complete the sale or service. H-GAC reserves the right to reject any entity acting on the Contractor’s behalf or refuse to add entities after a contract is awarded.

ARTICLE 21: CHANGE ORDERS AND AMENDMENTS

A. Any alterations, additions, or deletions to the terms of this Master Agreement, which are required by changes in federal or state law or by regulations, are automatically incorporated without written amendment hereto, and shall become effective on the date designated by such law or by regulation.

B. To ensure the legal and effective performance of this Master Agreement, both parties agree that any amendment that affects the performance under this Master Agreement must be mutually agreed upon and

Docusign Envelope ID: EA4D9790-70A1-4C6E-89A3-6957C4F66B17

that all such amendments must be in writing. After a period of no less than 30 days subsequent to written notice, unless sooner implementation is required by law, such amendments shall have the effect of qualifying the terms of this Master Agreement and shall be binding upon the parties as if written herein.

C. Customers have the right to issue a change order to any purchase orders issued to the Contractor for the purposes of clarification or inclusion of additional specifications, qualifications, conditions, etc. The change order must be in writing and agreed upon by Contractor and the Customer agency prior to issuance of any Change Order. A copy of the Change Order must be provided by the Contractor to, and acknowledged by, H-GAC.

ARTICLE 22: CONTRACT ITEM CHANGES

A. If a manufacturer discontinues a contracted item, that item will automatically be considered deleted from the contract with no penalty to Contractor. However, H-GAC may at its sole discretion elect to make a contract award to the next lowest Respondent for the item, or take any other action deemed by H-GAC, at its sole discretion, to be in the best interests of its Customers.

B. If a manufacturer makes any kind of change in a contracted item which affects the contract price, Contractor must advise H-GAC of the details. H-GAC may allow or reject the change at its sole discretion. If the change is rejected, H-GAC will remove the item from its program and there will be no penalty to Contractor. However, H- GAC may at its sole discretion elect to make a contract award to the next lowest Respondent for the item, or take any other action deemed by H-GAC, at its sole discretion, to be in the best interests of its Customers.

C. If a manufacturer makes any change in a contracted item which does not affect the contract price, Contractor shall advise H-GAC of the details. If the 'new' item is equal to or better than the originally contracted item, the 'new' item shall be approved as a replacement. If the change is rejected H-GAC will remove the item from its program and there will be no penalty to Contractor. However, H-GAC may at its sole discretion elect to make a contract award to the next lowest Respondent for the item or may take any other action deemed by H-GAC at its sole discretion, to be in the best interests of its Customers.

D. In the case of specifically identified catalogs or price sheets which have been contracted as base bid items or as published options, routine published changes to products and pricing will be automatically incorporated into the contract. However, Contractor must still provide written notice and an explanation of the changes to products and pricing. H-GAC will respond with written approval.

ARTICLE 23: CONTRACT PRICE ADJUSTMENTS

Price Decreases

If Contractor's Direct Cost decreases at any time during the full term of this award, Contractor must immediately pass the decrease on to H-GAC and lower its prices by the amount of the decrease in Direct Cost. (Direct Cost means Contractor's cost from the manufacturer of any item or if Contractor is the manufacturer, the cost of raw materials required to manufacture the item, plus costs of transportation from manufacturer to Contractor and Contractor to H-GAC. Contractor must notify H-GAC of price decreases in the same way as for price increases set out below. The price decrease shall become effective upon H-GAC's receipt of Contractor's notice. If Contractor routinely offers discounted contract pricing, H-GAC may request Contractor accept amended contract pricing equivalent to the routinely discounted pricing.

Price Increase

Contractors may request a price increase for items priced as Base Bid items and Published Options. The amount of any increase will not exceed actual documented increase in Contractor's Direct Cost and will not exceed 10% of the previous bid price. Considerations on the percentage limit will be given if the price increase is the result of increased tariff charges or other governmental actions, or other economic factors. Manufacturer price/contract changes involving the sale of motor vehicles will be considered and may be allowed during the entire contract

Docusign Envelope ID: EA4D9790-70A1-4C6E-89A3-6957C4F66B17

period subject to submission and verification of the proper documentation required for a contract change as referenced in this section.

Price Changes

Any permanent increase or decrease in offered pricing for a base contract item or published option is considered a price change. Temporary increases in pricing by whatever name (e.g., 'surcharge', 'adjustment', 'equalization charge', 'compliance charge', 'recovery charge', etc.), are also considered to be price changes.

For published catalogs and price sheets as part of an H-GAC contract, requests to amend the contract to reflect any new published catalog or price sheet must be submitted whenever the manufacturer publishes a new document. The request must include the new catalog or price sheet. All Products shall, at time of sale, be equipped as required under any then current applicable local, state, and federal government requirements. If, during any contract, changes are made to any government requirements which cause a manufacturer's costs of production to increase, Contractor may increase pricing to the extent of Contractor's actual cost increase. The increase must be substantiated with support documentation acceptable to H-GAC prior to taking effect. Modifications to a Product required to comply with such requirements which become effective after the date of any sale are the responsibility of the Customer.

Requesting Price Increase/Required Documentation

Contractor must submit a written overview of changes requested and reasons for the request, stating the amount of the increase, along with an itemized list of any increased prices, showing the Contractor's current price, revised price, the actual dollar difference and the percentage of the price increase by line item. Price change requests must be supported with substantive documentation (e.g., notices from suppliers and manufacturers of pricing changes in products, components, transportation, raw materials or commodities, and/or product availability, copies of invoices from suppliers, etc.) clearly showing that Contractor's actual costs have increased per the applicable line-item bid. The Producer Price Index (PPI) may be used as partial justification, subject to approval by H-GAC, but no price increase based solely on an increase in the PPI will be allowed. This documentation should be submitted in Excel format to facilitate analysis and updating of the website. The letter and documentation must be sent to Lead Program Coordinator, james.glover@h-gac.com.

Review/Approval of Requests

If H-GAC approves the price increase, Contractor will be notified in writing; no price increase will be effective until Contractor receives this notice. If H-GAC does not approve Contractor's price increase, Contractor may terminate its performance upon sixty (60) days advance written notice to H-GAC, however Contractor must fulfill any outstanding Purchase Orders. Termination of performance is Contractor's only remedy if H-GAC does not approve the price increase. H-GAC reserves the right to accept or reject any price change request.

ARTICLE 24: DELIVERIES AND SHIPPING TERMS

The Contractor agrees to make deliveries only upon receipt of authorized Customer Purchase Order acknowledged by H-GAC. Delivery made without such Purchase Order will be at Contractor's risk and will leave H-GAC the option of canceling any contract awarded to the Contractor. The Contractor must secure and deliver any item within five (5) working days, or as agreed to on any corresponding customer Purchase Order.

Shipping must be Freight On Board Destination to the delivery location designated on the Customer purchase order. The Contractor will retain title and control of all goods until delivery is completed and the Customer has accepted the delivery. All risk of transportation and all related charges are the responsibility of the Contractor. The Customer will notify the Contractor and H-GAC promptly of any damaged goods and will assist the Contractor in arranging for inspection. The Contractor must file all claims for visible or concealed damage. Unless otherwise stated in the Master Agreement, deliveries must consist only of new and unused merchandise.

ARTICLE 25: RESTOCKING (EXCHANGES AND RETURNS)

There will be no restocking charge to the Customer for return or exchange of any item purchased under the terms of any award. If the Customer wishes to return items purchased under an awarded contract, the Contractor agrees to exchange, these items for other items, with no additional charge incurred. Items must be returned to Contractor within thirty (30) days from date of delivery. If there is a difference in price in the items exchanged, the Contractor must notify H-GAC and invoice Customer for increase price or provide the Customer with a credit or refund for

Docusign Envelope ID: EA4D9790-70A1-4C6E-89A3-6957C4F66B17

any decrease in price per Customer's preference. On items returned, a credit or cash refund will be issued by the Contractor to Customer. This return and exchange option will extend for thirty (30) days following the expiration of the term of the Contract. All items returned by the Customer must be unused and in the same merchantable condition as when received. Items that are special ordered may be returned only upon approval of the Contractor.

ARTICLE 26: MANUALS

Each product delivered under contract to any Customer must be delivered with at least one (1) copy of a safety and operating manual and any other technical or maintenance manual. The cost of the manual(s) must be included in the price for the Product offered.

ARTICLE 27: OUT OF STOCK, PRODUCT RECALLS, AND DISCONTINUED PRODUCTS

H-GAC does NOT purchase the products sold pursuant to a Solicitation or Master Agreement. Contractor is responsible for ensuring that notices and mailings, such as Out of Stock or Discontinued Notices, Safety Alerts, Safety Recall Notices, and customer surveys, are sent directly to the Customer with a copy sent to H-GAC. Customer will have the option of accepting any equivalent product or canceling the item from Customer's Purchase Order. Contractor is not authorized to make substitutions without prior approval.

ARTICLE 28: WARRANTIES, SALES, AND SERVICE

Warranties must be the manufacturer's standard and inclusive of any other warranty requirements stated in the Master Agreement; any warranties offered by a dealer will be in addition to the manufacturer's standard warranty and will not be a substitute for such. Pricing for any product must be inclusive of the standard warranty.

Contractor is responsible for the execution and effectiveness of all product warranty requests and any claims, Contractor agrees to respond directly to correct warranty claims and to ensure reconciliation of warranty claims that have been assigned to a third party.

ARTICLE 29: TERMINATION PROCEDURES

The Contractor acknowledges that this Master Agreement may be terminated for Convenience or Default. H-GAC will not pay for any expenses incurred after the termination date of the contract.

A. *Convenience*

H-GAC may terminate this Master Agreement at any time, in whole or in part, with or without cause, whenever H-GAC determines that for any reason such termination is in the best interest of H-GAC, by providing written notice by certified mail to the Contractor. Upon receipt of notice of termination, all services hereunder of the Contractor and its employees and subcontractors shall cease to the extent specified in the notice of termination.

The Contractor may cancel or terminate this Master Agreement upon submission of thirty (30) days written notice, presented to H-GAC via certified mail. The Contractor may not give notice of cancellation after it has received notice of default from H-GAC.

B. *Default*

H-GAC may, by written notice of default to the Contractor, terminate the whole or any part of the Master Agreement, in any one of the following circumstances:

(1) If the Contractor fails to perform the services herein specified within the time specified herein or any extension thereof; or

(2) If the Contractor fails to perform any of the other provisions of this Master Agreement for any reason whatsoever, or so fails to make progress or otherwise violates the Master Agreements that completion of services herein specified within the Master Agreement term is significantly endangered, and in either of these two instances does not cure such failure within a period of ten (10) days (or such longer period of time as may be authorized by H-GAC in writing) after receiving written notice by certified mail of default from H-GAC.

(3) In the event of such termination, Contractor will notify H-GAC of any outstanding Purchase Orders and H-GAC will consult with the End User and notify the Contractor to what extent the End User wishes the

Docusign Envelope ID: EA4D9790-70A1-4C6E-89A3-6957C4F66B17

Contractor to complete the Purchase Order. If Contractor is unable to do so, Contractor may be subject to a claim for damages from H-GAC and/or the End User.

ARTICLE 30: SEVERABILITY

H-GAC and Contractor agree that should any provision of this Master Agreement be determined to be invalid or unenforceable, such determination shall not affect any other term of this Master Agreement, which shall continue in full force and effect.

ARTICLE 31: FORCE MAJEURE

To the extent that either party to this Master Agreement shall be wholly or partially prevented from the performance of any obligation or duty placed on such party by reason of or through strikes, stoppage of labor, riot, fire, flood, acts of war, insurrection, accident, order of any court, act of God, or specific cause reasonably beyond the party's control and not attributable to its neglect or nonfeasance, in such event, the time for the performance of such obligation or duty shall be suspended until such disability to perform is removed. Determination of force majeure shall rest solely with H-GAC.

ARTICLE 32: CONFLICT OF INTEREST

No officer, member or employee of the Contractor or Contractors subcontractor, no member of the governing body of the Contractor, and no other public officials of the Contractor who exercise any functions or responsibilities in the review or Contractor approval of this Master Agreement, shall participate in any decision relating to this Master Agreement which affects his or her personal interest, or shall have any personal or pecuniary interest, direct or indirect, in this Master Agreement.

A. **Conflict of Interest Questionnaire:** Chapter 176 of the Texas Local Government Code requires contractors contracting or seeking to contract with H-GAC to file a conflict-of-interest questionnaire (CIQ) if they have an employment or other business relationship with an H-GAC officer or an officer's close family member. The required questionnaire and instructions are located on the H-GAC website or at the Texas Ethics Commission website https://www.ethics.state.tx.us/forms/CIQ.pdf. H-GAC officers include its Board of Directors and Executive Director, who are listed on this website. Respondent must complete and file a CIQ with the Texas Ethics Commission if an employment or business relationship with H-GAC office or an officer's close family member as defined in the law exists.

B. **Certificate of Interested Parties Form – Form 1295:** As required by Section 2252.908 of the Texas Government Code. H-GAC will not enter a Contract with Contractor unless (i) the Contractor submits a disclosure of interested parties form to H-GAC at the time the Contractor submits the contract H-GAC, or (ii) the Contractor is exempt from such requirement. The required form and instructions are located at the Texas Ethics Commission website https://www.ethics.state.tx.us/whatsnew/elf_info_form1295.htm. Respondents who are awarded a Contract must submit their Form 1295 with the signed Contract to H-GAC.

ARTICLE 33: FEDERAL COMPLIANCE

Contractor agrees to comply with all federal statutes relating to nondiscrimination, labor standards, and environmental compliance. With regards to "Rights to Inventions Made Under a Contract or Master Agreement," If the Federal award meets the definition of "funding Master Agreement" under 37 CFR § 401.2 (a) and the recipient or subrecipient wishes to enter into a contract with a small business firm or nonprofit organization regarding the substitution of parties, assignment or performance of experimental, developmental, or research work under that "funding Master Agreement," the recipient or subrecipient must comply with the requirements of 37 CFR Part 401, "Rights to Inventions Made by Nonprofit Organizations and Small Business Firms Under Government Grants, Contracts and Cooperative Master Agreements," and any implementing regulations issued by the awarding agency. Contractor agrees to be wholly compliant with the provisions of 2 CFR 200, Appendix II. Additionally, for work to be performed under the Master Agreement or subcontract thereof, including procurement of materials or leases of equipment, Contractor shall notify each potential subcontractor or supplier of the Contractor's federal compliance obligations. These may include, but are not limited to: (a) Title VI of the Civil Rights Act of 1964 (P.L. 88-352) which prohibits discrimination on the basis of race, color or national origin; (b) Title IX of the Education Amendments of 1972, as amended (20 U.S.C. §§ 1681-1683, and 1685-1686), which prohibits discrimination on the basis of sex; (c) the Fair Labor Standards Act of 1938 (29 USC 676 et. seq.), (d)

Docusign Envelope ID: EA4D9790-70A1-4C6E-89A3-6957C4F66B17

Section 504 of the Rehabilitation Act of 1973, as amended (29 U.S.C. § 794), which prohibits discrimination on the basis of handicaps and the Americans with Disabilities Act of 1990; (e) the Age Discrimination in Employment Act of 1967 (29 USC 621 et. seq.) and the Age Discrimination Act of 1974, as amended (42 U.S.C. §§ 6101-6107), which prohibits discrimination on the basis of age; (f) the Drug Abuse Office and Treatment Act of 1972 (P.L. 92-255), as amended, relating to nondiscrimination on the basis of drug abuse; (g) the Comprehensive Alcohol Abuse and Alcoholism Prevention, Treatment and Rehabilitation Act of 1970 (P.L. 91-616), as amended, relating to the nondiscrimination on the basis of alcohol abuse or alcoholism; (h) §§ 523 and 527 of the Public Health Service Act of 1912 (42 U.S.C. 290 dd-3 and 290 ee-3), as amended, relating to confidentiality of alcohol and drug abuse patient records; (i) Title VIII of the Civil Rights Act of 1968 (42 U.S.C. § 3601 et seq.), as amended, relating to nondiscrimination in the sale, rental or financing of housing; (j) any other nondiscrimination provisions in any specific statute(s) applicable to any Federal funding for this Master Agreement; (k) the requirements of any other nondiscrimination statute(s) which may apply to this Master Agreement; (l) applicable provisions of the Clean Air Act (42 U.S.C. §7401 et seq.), the Federal Water Pollution Control Act, as amended (33 U.S.C. §1251 et seq.), Section 508 of the Clean Water Act (33 U.S.C. 1368), Executive Order 11738, and the Environmental Protection Agency regulations at 40 CPR Part 15; (m) applicable provisions of the Davis- Bacon Act (40 U.S.C. 276a - 276a-7), the Copeland Act (40 U.S.C. 276c), and the Contract Work Hours and Safety Standards Act (40 U.S.C. 327-332), as set forth in Department of Labor Regulations at 20 CPR 5.5a; (n) the mandatory standards and policies relating to energy efficiency which are contained in the state energy conservation plan issued in compliance with the Energy Policy and Conservation Act (P.L. 94-163).

ARTICLE 34: PROHIBITION ON CONTRACTING WITH ENTITIES USING CERTAIN TELECOMMUNICATIONS AND VIDEO SURVEILLANCE EQUIPMENT (EFFECTIVE AUG. 13, 2020 AND AS AMENDED OCTOBER 26, 2020)

Pursuant to 2 CFR 200.216, Contractor shall not offer equipment, services, or system that use covered telecommunications equipment or services as a substantial or essential component of any system, or as critical technology as part of any system. Covered telecommunications equipment or services means 1) telecommunications equipment produced by Huawei Technologies Company or ZTE Corporation (or any subsidiary or affiliate of such entities); 2) for the purpose of public safety, security of government facilities, physical security surveillance of critical infrastructure, and other national security purposes, video surveillance and telecommunications equipment produced by Hytera Communications Corporation, Hangzhou Hikvision Digital Technology Company, or Dahua Technology Company (or any subsidiary or affiliate of such entities); 3) telecommunications or video surveillance services provided by such entities or using such equipment; or 4) telecommunications or video surveillance equipment or services produced or provided by an entity that the Secretary of Defense, in consultation with the Director of National Intelligence or the Director of the Federal Bureau of Investigation, reasonably believes to be an entity owned or controlled by, or otherwise connected to, the government of a covered foreign country. Respondent must comply with requirements for certifications. The provision at 48 C.F.R Section 52.204-26 requires that offerors review SAM prior to completing their required representations. This rule applies to all acquisitions, including acquisitions at or below the simplified acquisition threshold and to acquisitions of commercial items, including commercially available off the-shelf items.

ARTICLE 35: DOMESTIC PREFERENCE

In accordance with 2 CFR 200.322, as appropriate and to the extent consistent with law, when using federal grant award funds H-GAC should, to the greatest extent practicable, provide a preference for the purchase, acquisition, or use of goods, products, or materials produced in the United States (including but not limited to iron, aluminum, steel, cement, and other manufactured products). H-GAC must include this requirement in all subawards including all contracts and purchase orders for work or products under the federal grant award. If Contractor intends to qualify for Purchase Orders using federal grant money, then it shall work with H-GAC to provide all required certifications and other documentation needed to show compliance.

ARTICLE 36: CRIMINAL PROVISIONS AND SANCTIONS

The Contractor agrees to perform the Master Agreement in conformance with safeguards against fraud and abuse as set forth by the H-GAC, the State of Texas, and the acts and regulations of any related state or federal agency. The Contractor agrees to promptly notify H-GAC of any actual or suspected fraud, abuse, or other criminal activity through the filing of a written report within twenty-four (24) hours of knowledge thereof. Contractor shall notify H-GAC of any accident or incident requiring medical attention arising from its activities under this Master

Docusign Envelope ID: EA4D9790-70A1-4C6E-89A3-6957C4F66B17

Agreement within twenty-four (24) hours of such occurrence. Theft or willful damage to property on loan to the Contractor from H-GAC, if any, shall be reported to local law enforcement agencies and H-GAC within two (2) hours of discovery of any such act.

The Contractor further agrees to cooperate fully with H-GAC, local law enforcement agencies, the State of Texas, the Federal Bureau of Investigation, and any other duly authorized investigative unit, in carrying out a full investigation of all such incidents.

The Contractor shall notify H-GAC of the threat of lawsuit or of any actual suit filed against the Contractor pertaining to this Master Agreement or which would adversely affect the Contractor's ability to perform services under this Master Agreement.

ARTICLE 37: INDEMNIFICATION AND RECOVERY

H-GAC's liability under this Master Agreement, whether for breach of contract, warranty, negligence, strict liability, in tort or otherwise, is limited to its order processing charge. In no event will H-GAC be liable for any loss of use, loss of time, inconvenience, commercial loss, lost profits, or savings or other incidental, special or consequential damages to the full extent such use may be disclaimed by law. Contractor agrees, to the extent permitted by law, to defend and hold harmless H-GAC, its board members, officers, agents, officials, employees, and indemnities from any and all claims, costs, expenses (including reasonable attorney fees), actions, causes of action, judgements, and liens arising as a result of Contractor's negligent act or omission under this Master Agreement. Contractor shall notify H-GAC of the threat of lawsuit or of any actual suit filed against Contractor relating to this Master Agreement.

ARTICLE 38: LIMITATION OF CONTRACTOR'S LIABILITY

Except as specified in any separate writing between the Contractor and an END USER, Contractor's total liability under this Master Agreement, whether for breach of contract, warranty, negligence, strict liability, in tort or otherwise, but excluding its obligation to indemnify H-GAC, is limited to the price of the particular products/services sold hereunder, and Contractor agrees either to refund the purchase price or to repair or replace product(s) that are not as warranted. In no event will Contractor be liable for any loss of use, loss of time, inconvenience, commercial loss, loss of profits or savings or other incidental, special or consequential damages to the full extent such use may be disclaimed by law. Contractor understands and agrees that it shall be liable to repay and shall repay upon demand to END USER any amounts determined by H-GAC, its independent auditors, or any agency of State or Federal government to have been paid in violation of the terms of this Master Agreement.

ARTICLE 39: TITLES NOT RESTRICTIVE

The titles assigned to the various Articles of this Master Agreement are for convenience only. Titles shall not be considered restrictive of the subject matter of any Article, or part of this Master Agreement.

ARTICLE 40: JOINT WORK PRODUCT

This Master Agreement is the joint work product of H-GAC and the Contractor. This Master Agreement has been negotiated by H-GAC and the Contractor and their respective counsel and shall be fairly interpreted in accordance with its terms and, in the event of any ambiguities, no inferences shall be drawn against any party.

ARTICLE 41: PROCUREMENT OF RECOVERED MATERIAL

H-GAC and the Respondent must comply with section 6002 of the Solid Waste Disposal Act, as amended by the Resource Conservation and Recovery Act. The requirements of Section 6002 include: (1) procuring only items designated in guidelines of the Environmental Protection Agency (EPA) at 40 CFR part 247 that contain the highest percentage of recovered materials practicable, consistent with maintaining a satisfactory level of competition, where the purchase price of the item exceeds $10,000 or the value of the quantity acquired during the preceding fiscal year exceeded $10,000; (2) procuring solid waste management services in a manner that maximizes energy and resource recovery; and (3) establishing an affirmative procurement program for procurement of recovered materials identified in the EPA guidelines. Pursuant to the Federal Rule above, as required by the Resource Conservation and Recovery Act of 1976 (42 U.S.C. § 6962(c)(3)(A)(i)), Respondent certifies that the percentage of recovered materials content for EPA-designated items to be delivered or used in the

Docusign Envelope ID: EA4D9790-70A1-4C6E-89A3-6957C4F66B17

performance of the Contract will be at least the amount required by the applicable contract specifications or other contractual requirements.

ARTICLE 42: COPELAND "ANTI-KICKBACK" ACT

Contractor shall comply with 18 U.S.C. § 874, 40 U.S.C. § 3145, and the requirements of 29 C.F.R. pt. 3 as may be applicable, which are incorporated by reference into the contract. The contractor or subcontractor shall insert in any subcontracts the clause above and such other clauses as appropriate agency instructions require, and also a clause requiring the subcontractors to include these clauses in any lower tier subcontracts. The prime contractor shall be responsible for the compliance by any subcontractor or lower tier subcontractor with all of these contract clauses. A breach of the contract clauses above may be grounds for termination of the Contract, and for debarment as a contractor and subcontractor as provided in 29 C.F.R. § 5.12.

ARTICLE 43: DISCRIMINATION

Respondent and any potential subcontractors shall comply with all Federal statutes relating to nondiscrimination. These include, but are not limited to:

a) Title VI of the Civil Rights Act of 1964 (P.L. 88-352), which prohibits discrimination on the basis of race, color, or national origin;
b) Title IX of the Education Amendments of 1972, as amended (20 U.S.C. §§1681-1683, and 1685-1686), which prohibits discrimination on the basis of sex;
c) Section 504 of the Rehabilitation Act of 1973, as amended (29 U.S.C. §794), which prohibits discrimination on the basis of handicaps;
d) The Age Discrimination Act of 1975, as amended (42 U.S.C. §§6101- 6107), which prohibits discrimination on the basis of age;
e) The Drug Abuse Office and Treatment Act of 1972 (P.L. 92-255), as amended, relating to nondiscrimination on the basis of drug abuse;
f) The Comprehensive Alcohol Abuse and Alcoholism Prevention, Treatment and Rehabilitation Act of 1970 (P.L. 91-616), as amended, relating to nondiscrimination on the basis of alcohol abuse or alcoholism;
g) Sections 523 and 527 of the Public Health Service Act of 1912 (42 U.S.C. §§290 dd-3 and 290 ee-3), as amended, relating to confidentiality of alcohol and drug abuse patient records;
h) Title VIII of the Civil Rights Act of 1968 (42 U.S.C. §§3601 et seq.), as amended, relating to nondiscrimination in the sale, rental, or financing of housing;
i) Any other nondiscrimination provisions in the specific statute(s) under which application for Federal assistance is being made; and
j) The requirements of any other nondiscrimination statute(s) that may apply to the application.

ARTICLE 44: DRUG FREE WORKPLACE

Contractor must provide a drug-free workplace in accordance with the Drug-Free Workplace Act, as applicable. For the purposes of this Section, "drug-free" means a worksite at which employees are prohibited from engaging in the unlawful manufacture, distribution, dispensation, possession, or use of a controlled substance. H-GAC may request a copy of this policy.

ARTICLE 45: APPLICABILITY TO SUBCONTRACTORS

Respondent agrees that all contracts it awards pursuant to the contract awarded as a result of this Master Agreement will be bound by the foregoing terms and conditions.

ARTICLE 46: WARRANTY AND COPYRIGHT

Submissions must include all warranty information, including items covered, items excluded, duration, and renewability. Submissions must include proof of licensing if using third party code for programming.

ARTICLE 47: DATA HANDLING AND SECURITY

It will always be the responsibility of the selected Contractor to manage data transfer and to secure all data appropriately during the project to prevent unauthorized access to all data, products, and deliverables.

Docusign Envelope ID: EA4D9790-70A1-4C6E-89A3-6957C4F66B17

ARTICLE 48: DISPUTES

All disputes concerning questions of fact or of law arising under this Master Agreement, which are not addressed within the Whole Master Agreement as defined pursuant to Article 4 hereof, shall be decided by the Executive Director of H-GAC or his designee, who shall reduce his decision to writing and provide notice thereof to the Contractor. The decision of the Executive Director or his designee shall be final and conclusive unless, within thirty (30) days from the date of receipt of such notice, the Contractor requests a rehearing from the Executive Director of H-GAC. In connection with any rehearing under this Article, the Contractor shall be afforded an opportunity to be heard and offer evidence in support of its position. The decision of the Executive Director after any such rehearing shall be final and conclusive. The Contractor may, if it elects to do so, appeal the final and conclusive decision of the Executive Director to a court of competent jurisdiction. Pending final decision of a dispute hereunder, the Contractor shall proceed diligently with the performance of the Master Agreement and in accordance with H-GAC's final decision.

ARTICLE 49: CHOICE OF LAW: VENUE

This Master Agreement shall be governed by the laws of the State of Texas. Venue and jurisdiction of any suit or cause of action arising under or in connection with the Master Agreement shall lie exclusively in Harris County, Texas. Disputes between END USER and Contractor are to be resolved in accordance with the law and venue rules of the state of purchase. Contractor shall immediately notify H-GAC of such disputes.

ARTICLE 50: ORDER OF PRIORITY

In the case of any conflict between or within this Master Agreement, the following order of priority shall be utilized: 1) General Provisions, 2) Special Provisions, 3) Scope of Work, and 4) Other Attachments.

ARTICLE 51: WHOLE MASTER AGREEMENT

Please note, this is an H-GAC Master Agreement template and is used for all products and services offered in H-GAC Cooperative Purchasing. Any redlines to this Master Agreement may not be reviewed. If this Master Agreement has not been signed by the Contractor within 30 calendar days, this Master Agreement will be automatically voided. The Master General Provisions, Master Special Provisions, and Attachments, as provided herein, constitute the complete Master Agreement between the parties hereto, and supersede any and all oral and written Master Agreements between the parties relating to matters herein. Except as otherwise provided herein, this Master Agreement cannot be modified without written consent of the parties.

ARTICLE 52: UNIVERSAL IDENTIFIER AND SYSTEM FOR AWARD MANAGEMENT (SAM)

In accordance with 2 CFR Title 2, Subtitle A, Chapter I, Part 25 as it applies to a Federal awarding agency's grants, cooperative agreements, loans, and other types of Federal financial assistance as defined in 2 CFR 25.406. Contractor understands and as it relates to 2 CFR 25.205(a), a Federal awarding agency may not make a Federal award or financial modification to an existing Federal award to an applicant or recipient until the entity has complied with the requirements described in 2 CFR 25.200 to provide a valid unique entity identifier and maintain an active SAM registration (www.SAM.gov) with current information (other than any requirement that is not applicable because the entity is exempted under § 25.110). 2 CFR 25.200(b) requires that registration in the SAM **prior to submitting an application or plan**; and maintain an active SAM registration with current information, including information on a recipient's immediate and highest level owner and subsidiaries, as well as on all predecessors that have been awarded a Federal contract or grant within the last three years, if applicable, at all times during which it has an active Federal award or an application or plan under consideration by a Federal awarding agency; and provide its unique entity identifier in each application or plan it submits to the Federal awarding agency. To remain registered in the SAM database after the initial registration, the applicant is required to review and update its information in the SAM database on an annual basis from the date of initial registration or subsequent updates to ensure it is current, accurate and complete. At the time a Federal awarding agency is ready to make a Federal award, if the intended recipient has not complied with an applicable requirement to provide a unique entity identifier or maintain an active SAM registration with current information, the Federal awarding agency: (1) May determine that the applicant is not qualified to receive a Federal award; and (2) May use that determination as a basis for making a Federal award to another applicant.

ARTICLE 53: PROCUREMENT OF RECOVERED MATERIALS

In accordance with 2 CFR 200.323, the Houston-Galveston Area Council and the Contractor or Subrecipient must

Docusign Envelope ID: EA4D9790-70A1-4C6E-89A3-6957C4F66B17

comply with section 6002 of the Solid Waste Disposal Act, as amended by the Resource Conservation and Recovery Act. The requirements of Section 6002 include: (1) procuring only items designated in guidelines of the Environmental Protection Agency (EPA) at 40 CFR part 247 that contain the highest percentage of recovered materials practicable, consistent with maintaining a satisfactory level of competition, where the purchase price of the item exceeds $10,000 or the value of the quantity acquired during the preceding fiscal year exceeded $10,000; (2) procuring solid waste management services in a manner that maximizes energy and resource recovery; and (3) establishing an affirmative procurement program for procurement of recovered materials identified in the EPA guidelines. Pursuant to the Federal Rule above, as required by the Resource Conservation and Recovery Act of 1976 (42 U.S.C. § 6962(c)(3)(A)(i)), the Contractor or Subrecipient certifies that the percentage of recovered materials content for EPA-designated items to be delivered or used in the performance of the Agreement will be at least the amount required by the applicable contract specifications or other contractual requirements.

SIGNATURES:
H-GAC and the Contractor have read, agreed, and executed the whole Master Agreement as of the date first written above, as accepted by:

Siddons Martin Emergency Group LLC		**H-GAC**	
Signature	Signed by: Jeffry A. Doran B2D885F9B5D14E7...	Signature	DocuSigned by: 82EC270D5D61423...
Name	Jeffry A. Doran	Name	Chuck Wemple
Title	Director - Order Management	Title	Executive Director
Date	10/30/2024	Date	11/7/2024

Docusign Envelope ID: EA4D9790-70A1-4C6E-89A3-6957C4F66B17

MASTER SPECIAL PROVISIONS

Please note, this is an H-GAC Master Agreement template and is used for all products and services offered in H-GAC Cooperative Purchasing. Any redlines to this Master Agreement may not be reviewed. Incorporated by attachment, as part of the whole Master Agreement, H-GAC and the Contractor do, hereby agree to the Master Special Provisions as follows:

ARTICLE 1: BIDS/PROPOSALS INCORPORATED

In addition to the whole Master Agreement, the following documents listed in order of priority are incorporated into the Master Agreement by reference: Bid/Proposal Specifications and Contractor's Response to the Bid/Proposal.

ARTICLE 2: END USER MASTER AGREEMENTS ("EUA")

H-GAC acknowledges that the END USER, which is the HGACBuy customer utilizing the contract (CUSTOMER and END USER may be used interchangeably) may choose to enter into an End User Master Agreement (EUA) with the Contractor through this Master Agreement. A CUSTOMER/END USER is a state agency, county, municipality, special district, or other political subdivision of a state, or a qualifying non-profit corporation (providing one or more governmental function or service that possess legal authority to enter into the Contract. The term of the EUA may exceed the term of the current H-GAC Master Agreement.

H-GAC's acknowledgement is not an endorsement or approval of the End User Master Agreement's terms and conditions. Contractor agrees not to offer, agree to or accept from the CUSTOMER/END USER, any terms or conditions that conflict with those in Contractor's Master Agreement with H-GAC. Contractor affirms that termination of its Master Agreement with H-GAC for any reason shall not result in the termination of any underlying EUA, which shall in each instance, continue pursuant to the EUA's stated terms and duration. Pursuant to the terms of this Master Agreement, termination of this Master Agreement will disallow the Contractor from entering into any new EUA with CUSTOMER/END USER. Applicable H-GAC order processing charges will be due and payable to H-GAC on any EUAs, surviving termination of this Master Agreement between H-GAC and Contractor.

ARTICLE 3: MOST FAVORED CUSTOMER CLAUSE

Contractor shall provide its most favorable pricing and terms to H-GAC. If at any time during this Master Agreement, Contractor develops a regularly followed standard procedure of entering into Master Agreements with other governmental customers within the State of Texas, and offers the same or substantially the same products/services offered to H-GAC on a basis that provides prices, warranties, benefits, and or terms more favorable than those provided to H-GAC, Contractor shall notify H-GAC within ten (10) business days thereafter, and this Master Agreement shall be deemed to be automatically retroactively amended, to the effective date of Contractor's most favorable past Master Agreement with another entity. Contractor shall provide the same prices, warranties, benefits, or terms to H-GAC and its CUSTOMER/END USER as provided in its most favorable past Master Agreement. H-GAC shall have the right and option at any time to decline to accept any such change, in which case the amendment shall be deemed null and void. If Contractor claims that a more favorable price, warranty, benefit, or term that was charged or offered to another entity during the term of this Master Agreement, does not constitute more favorable treatment, than Contractor shall, within ten (10) business days, notify H-GAC in writing, setting forth the detailed reasons Contractor believes the aforesaid

Docusign Envelope ID: EA4D9790-70A1-4C6E-89A3-6957C4F66B17

offer is not in fact most favored treatment. H-GAC, after due consideration of Contractor's written explanation, may decline to accept such explanation and thereupon this Master Agreement between H-GAC and Contractor shall be automatically amended, effective retroactively, to the effective date of the most favored Master Agreement, to provide the same prices, warranties, benefits, or terms to H-GAC and the CUSTOMER/END USER.

EXCEPTION: This clause shall not be applicable to prices and price adjustments offered by a bidder, proposer, or contractor, which are not within bidder's/proposer's control [example; a manufacturer's bid concession], or to any prices offered to the Federal Government and its agencies.

ARTICLE 4: PARTY LIABILITY

Contractor's total liability under this Master Agreement, whether for breach of contract, warranty, negligence, strict liability, in tort or otherwise, is limited to the price of the particular products/services sold hereunder. Contractor agrees either to refund the purchase price or to repair or replace product(s) that are not as warranted. Contractor accepts liability to repay, and shall repay upon demand to CUSTOMER/END USER, any amounts determined by H-GAC, its independent auditors, or any state or federal agency, to have been paid in violation of the terms of this Master Agreement.

ARTICLE 5: GOVERNING LAW & VENUE

Contractor and H-GAC agree that Contractor will make every reasonable effort to resolve disputes with the CUSTOMER/END USER in accord with the law and venue rules of the state of purchase. Contractor shall immediately notify H-GAC of such disputes.

ARTICLE 6: SALES AND ORDER PROCESSING CHARGE

Contractor shall sell its products to CUSTOMER/END USER based on the pricing and terms of this Master Agreement. H-GAC will invoice Contractor for the applicable order processing charge when H-GAC receives notification of a CUSTOMER/END USER order. Contractor shall remit to H-GAC the full amount of the applicable order processing charge, after delivery of any product or service and subsequent CUSTOMER/END USER acceptance. Payment of the Order Processing Charge shall be remitted from Contractor to H-GAC, within thirty (30) calendar days or ten (10) business days after receipt of a CUSTOMER/END USER's payment, whichever comes first, notwithstanding Contractor's receipt of invoice. For sales made by Contractor based on this Master Agreement, including sales to entities without Interlocal Master Agreements, Contractor shall pay the applicable order processing charges to H-GAC. Further, Contractor agrees to encourage entities who are not members of H-GAC's Cooperative Purchasing Program to execute an H-GAC Interlocal Master Agreement. H-GAC reserves the right to take appropriate actions including, but not limited to, Master Agreement termination if Contractor fails to promptly remit the appropriate order processing charge to H-GAC. In no event shall H-GAC have any liability to Contractor for any goods or services a CUSTOMER/END USER procures from Contractor. At all times, Contractor shall remain liable to pay to H-GAC any order processing charges on any portion of the Master Agreement actually performed, and for which compensation was received by Contractor.

ARTICLE 7: LIQUIDATED DAMAGES

Contractor and H-GAC agree that Contractor shall cooperate with the CUSTOMER/END USER at the time a CUSTOMER/END USER purchase order is placed, to determine terms for any liquidated damages.

ARTICLE 8: INSURANCE

Unless otherwise stipulated in Section B of the Bid/Proposal Specifications, Contractor must have the following insurance and coverage minimums:

Docusign Envelope ID: EA4D9790-70A1-4C6E-89A3-6957C4F66B17

a. General liability insurance with a Single Occurrence limit of at least $1,000,000.00, and a General Aggregate limit of at least two times the Single Occurrence limit.
b. Product liability insurance with a Single Occurrence limit of at least $1,000,000.00, and a General Aggregate limit of at least two times the Single Occurrence limit for all Products except Automotive Fire Apparatus. For Automotive Fire Apparatus, see Section B of the Bid/Proposal Specifications.
c. Property Damage or Destruction insurance is required for coverage of End User owned equipment while in Contractor's possession, custody, or control. The minimum Single Occurrence limit is $500,000.00 and the General Aggregate limit must be at least two times the Single Occurrence limit. This insurance may be carried in several ways, e.g. under an Inland Marine policy, as art of Automobile coverage, or under a Garage Keepers policy. In any event, this coverage must be specifically and clearly listed on insurance certificate(s) submitted to H-GAC.
d. Insurance coverage shall be in effect for the length of any contract made pursuant to the Bid/Proposal, and for any extensions thereof, plus the number of days/months required to deliver any outstanding order after the close of the contract period.
e. Original Insurance Certificates must be furnished to H-GAC on request, showing Contractor as the insured and showing coverage and limits for the insurances listed above.
f. If any Product(s) or Service(s) will be provided by parties other than Contractor, all such parties are required to carry the minimum insurance coverages specified herein, and if requested by H-GAC, a separate insurance certificate must be submitted for each such party.
g. H-GAC reserves the right to contact insurance underwriters to confirm policy and certificate issuance and document accuracy.

ARTICLE 9: PERFORMANCE AND PAYMENT BONDS FOR INDIVIDUAL ORDERS

H-GAC's contractual requirements DO NOT include a Performance & Payment Bond (PPB); therefore, Contractor shall offer pricing that reflects this cost savings. Contractor shall remain prepared to offer a PPB to cover any order if so requested by the CUSTOMER/END USER. Contractor shall quote a price to CUSTOMER/END USER for provision of any requested PPB, and agrees to furnish the PPB within ten business (10) days of receipt of CUSTOMER/END USER's purchase order.

ARTICLE 10: ORDER PROCESSING CHARGE

H-GAC will apply an Order Processing Charge for each sale done through the H-GAC contract, with the exception of orders for motor vehicles. Any pricing submitted must include this charge amount per the most current H-GAC schedule. For motor vehicle orders, the Processing Charge is paid by the CUSTOMER/END USER. Contractor will need to refer to the solicitation for the Order Processing Charge.

ARTICLE 11: CHANGE OF STATUS

Contractor shall immediately notify H-GAC, in writing, of ANY change in ownership, control, dealership/franchisee status, Motor Vehicle license status, or name. Contractor shall offer written guidance to advise H-GAC if this Master Agreement shall be affected in any way by such change. H-GAC shall have the right to determine whether or not such change is acceptable, and to determine what action shall be warranted, up to and including cancellation of Master Agreement.

ARTICLE 12: REQUIREMENTS TO APPLICABLE PHYSICAL GOODS

In the case of physical goods (e.g. equipment, material, supplies, as opposed to services), all Products offered must comply with any applicable provisions of the Texas Business and Commerce Code, Title 1, Chapter 2 and with at least the following:

Docusign Envelope ID: EA4D9790-70A1-4C6E-89A3-6957C4F66B17

a. Be new, unused, and not refurbished.
b. Not be a prototype as the general design, operation, and performance. This requirement is NOT meant to preclude the Contractor from offering new models or configurations which incorporate improvements in a current design or add functionality, but in which new model or configuration may be new to the marketplace.
c. Include all accessories which may or may not be specifically mentioned in the Master Agreement, but which are normally furnished or necessary to make the Product ready for its intended use upon delivery. Such accessories shall be assembled, installed, and adjusted to allow continuous operation of Product at time of delivery.
d. Have assemblies, sub-assemblies and component parts that are standard and interchangeable throughout the entire quantity of a Product as may be purchased simultaneously by any END USER/CUSTOMER.
e. Be designed and constructed using current industry accepted engineering and safety practices, and materials.
f. Be available for inspection at any time prior to or after procurement.

ARTICLE 13: TEXAS MOTOR VEHICLE BOARD LICENSING

All Contractors that deal in motor vehicles shall maintain current licenses that are required by the Texas Motor Vehicle Commission Code. If at any time during this Master Agreement term, any required Contractor license is denied, revoked, or not renewed, Contractor shall be in default of this Master Agreement, unless the Texas Motor Vehicle Board issues a stay or waiver. Contractor shall promptly provide copies of all current applicable Texas Motor Vehicle Board documentation to H-GAC upon request.

ARTICLE 14: INSPECTION/TESTING

All Products sold pursuant to this Master Agreement will be subject to inspection/testing by or at the direction of H-GAC and/or the ordering CUSTOMER/END USER, either at the delivery destination or the place of manufacture. In the event a Product fails to meet or exceed all requirements of this Master Agreement, and unless otherwise agreed in advance, the cost of any inspection and/or testing, will be the responsibility of the Contractor.

ARTICLE 15: ADDITIONAL REPORTING REQUIREMENTS

Contractor agrees to submit written quarterly reports to H-GAC detailing all transactions during the previous three (3) month period. Reports must include, but are not limited, to the following information:

a. CUSTOMER/END USER Name
b. Product/Service purchased, including Product Code if applicable
c. Customer Purchase Order Number
d. Purchase Order Date
e. Product/Service dollar amount
f. HGACBuy Order Processing Charge amount

ARTICLE 16: BACKGROUND CHECKS

Cooperative customers may request background checks on any awarded contractor's employees who will have direct contact with students, or for any other reason they so choose, any may require contractor to pay the cost of obtaining any background information requested by the CUSTOMER/END USER.

ARTICLE 17: PROHIBITION ON CONTRACTS WITH COMPANIES BOYCOTTING ISRAEL CERTIFICATION

As required by Chapter 2271 of the Texas Local Government Code the Contractor must verify that it 1) does not boycott Israel; and 2) will not boycott Israel during the term of the Contract. Pursuant to Section 2271.001, Texas Government Code:

Docusign Envelope ID: EA4D9790-70A1-4C6E-89A3-6957C4F66B17

1. "Boycott Israel" means refusing to deal with, terminating business activities with, or otherwise taking any action that is intended to penalize, inflict economic harm on, or limit commercial relations specifically with Israel, or with a person or entity doing business in Israel or in an Israeli-controlled territory, but does not include an action made for ordinary business purposes; and

2. "Company" means a for-profit sole proprietorship, organization, association, corporation, partnership, joint venture, limited partnership, limited liability partnership, or any limited liability company, including a wholly owned subsidiary, majority-owned subsidiary, parent company or affiliate of those entities or business associations that exist to make a profit.

ARTICLE 18: NO EXCLUDED NATION OR TERRORIST ORGANIZATION CERTIFICATION

As required by Chapter 2252 of the Texas Government Code the Contractor must certify that it is not a company engaged in active business operations with Sudan, Iran, or a foreign terrorist organization – specifically, any company identified on a list prepared and maintained by the Texas Comptroller under Texas Government Code §§806.051, 807.051, or 2252.153. (A company that the U.S. Government affirmatively declares to be excluded from its federal sanctions regime relating to Sudan, Iran, or any federal sanctions regime relating to a foreign terrorist organization is not subject to the contract prohibition.)

ARTICLE 19: PROHIBITION ON CONTRACTING WITH ENTITIES USING CERTAIN TELECOMMUNICATIONS AND VIDEO SURVEILLANCE EQUIPMENT (Effective Aug. 13, 2020 and as amended October 26, 2020)

Pursuant to 2 CFR 200.216, Contractor shall not offer equipment, services, or system that use covered telecommunications equipment or services as a substantial or essential component of any system, or as critical technology as part of any system. ''Covered telecommunications equipment or services means 1) telecommunications equipment produced by Huawei Technologies Company or ZTE Corporation (or any subsidiary or affiliate of such entities); 2) for the purpose of public safety, security of government facilities, physical security surveillance of critical infrastructure, and other national security purposes, video surveillance and telecommunications equipment produced by Hytera Communications Corporation, Hangzhou Hikvision Digital Technology Company, or Dahua Technology Company (or any subsidiary or affiliate of such entities); 3) telecommunications or video surveillance services provided by such entities or using such equipment; or 4) telecommunications or video surveillance equipment or services produced or provided by an entity that the Secretary of Defense, in consultation with the Director of National Intelligence or the Director of the Federal Bureau of Investigation, reasonably believes to be an entity owned or controlled by, or otherwise connected to, the government of a covered foreign country.

Contractor must comply with requirements for certifications. The provision at 48 C.F.R Section 52.204-26 requires that Contractors review SAM prior to completing their required representations. This rule applies to all acquisitions, including acquisitions at or below the simplified acquisition threshold and to acquisitions of commercial items, including commercially available off the-shelf items.

ARTICLE 20: BUY AMERICA ACT (National School Lunch Program and Breakfast Program)

With respect to products purchased by CUSTOMER/END USER for use in the National School Lunch Program and/or National School Breakfast Program, Contractor shall comply with all federal procurement laws and regulations with respect to such programs, including the Buy American provisions set forth in 7 C.F.R. Part 210.21(d), to the extent applicable. Contractor agrees to provide all certifications required by CUSTOMER/END USER regarding such programs.

In the event Contractor or Contractor's supplier(s) are unable or unwilling to certify compliance with the Buy American Provision, or the applicability of an exception to the Buy American provision, H-GAC CUSTOMER/END USER may decide not to purchase from Contractor. Additionally, H-GAC

Docusign Envelope ID: EA4D9790-70A1-4C6E-89A3-6957C4F66B17

CUSTOMER/END USER may require country of origin on all products and invoices submitted for payment by Contractor, and Contractor agrees to comply with any such requirement.

ARTICLE 21: BUY AMERICA REQUIREMENT (Applies only to Federally Funded Highway and Transit Projects)

With respect to products purchased by CUSTOMER/END USER for use in federally funded highway projects, Contractor shall comply with all federal procurement laws and regulations with respect to such projects, including the Buy American provisions set forth in 23 U.S.C. Section 313, 23 C.F.R. Section 635.410, as amended, and the Steel and Iron Preference provisions of Texas Transportation Code Section 223.045, to the extent applicable. Contractor agrees to provide all certifications required by CUSTOMER/END USER regarding such programs. With respect to products purchased by CUSTOMER/END USER for use in federally funded transit projects, Contractor shall comply with all federal procurement laws and regulations with respect to such projects, including the Buy American provisions set forth in 49 U.S.C. Section 5323(j)(1), 49 C.F.R. Sections 661.6 or 661.12, to the extent applicable. Contractor agrees to provide all certifications required by CUSTOMER/END USER regarding such programs.

ARTICLE 22: DOMESTIC PREFERENCE

In accordance with 2 CFR 200.322, as appropriate and to the extent consistent with law, a CUSTOMER/END USER using federal grant award funds should, to the greatest extent practicable, provide a preference for the purchase, acquisition, or use of goods, products, or materials produced in the United States (including but not limited to iron, aluminum, steel, cement, and other manufactured products). The CUSTOMER/END USER must include this requirement in all subawards including all contracts and purchase orders for work or products under the federal grant award. If Contractor intends to qualify for Purchase Orders using federal grant money, they shall work with the CUSTOMER/END USER to provide all required certifications and other documentation needed to show compliance.

ARTICLE 23: TITLE VI REQUIREMENTS

H-GAC in accordance with the provisions of Title VI of the Civil Rights Act of 1964 (78 Stat. 252, 42 U.S.C. §§ 2000d to 2000d-4) and the Regulations, hereby notifies all bidders that it will affirmatively ensure that any disadvantaged business enterprises will be afforded full and fair opportunity to submit in response to this Master Agreement and will not be discriminated against on the grounds of race, color, or national origin in consideration for an award.

ARTICLE 24: EQUAL EMPLOYMENT OPPORTUNITY

Except as otherwise provided under 41 CFR Part 60, all Contracts and CUSTOMER/END USER Purchase Orders that meet the definition of "federally assisted construction contract" in 41 CFR Part 60-1.3 shall be deemed to include the equal opportunity clause provided under 41 CFR 60-1.4(b), in accordance with Executive Order 11246, "Equal Employment Opportunity" (30 FR 12319, 12935, 3 CFR Part, 1964-1965 Comp., pg.339), as amended by Executive Order 11375, "Amending Executive Order 11246 Relating to Equal Employment Opportunity," and implementing regulations at 41CFR Part 60, "Office of Federal Contract Compliance Programs, Equal Employment Opportunity, Department of Labor."

The equal opportunity clause provided under 41 CFR 60-1.4(b) is hereby incorporated by reference. Contractor agrees that such provision applies to any contract that meets the definition of "federally assisted construction contract" in 41 CFR Part 60-1.3 and agrees that it will comply with such provision.

ARTICLE 25: CLEAN AIR AND WATER POLLUTION CONTROL ACT

CUSTOMER/END USER Purchase Orders using federal funds must contain a provision that requires the Contractor to agree to comply with all applicable standards, orders or regulations issued pursuant to the Clean

Docusign Envelope ID: EA4D9790-70A1-4C6E-89A3-6957C4F66B17

Air Act (42 U.S.C. 7401-7671q) and the Federal Water Pollution Control Act as amended (33 U.S.C. 1251-1387). Violations must be reported to the Federal awarding agency and the Regional Office of the Environmental Protection Agency (EPA).

Pursuant to the Federal Rule above, Contractor certifies that it is in compliance with all applicable provisions of the Clean Air Act (42 U.S.C. 7401-7671q) and the Federal Water Pollution Control Act as amended (33 U.S.C. 1251-1387) and will remain in compliance during the term of the Contract.

ARTICLE 26: PREVAILING WAGE

Contractor and any potential subcontractors have a duty to and shall pay the prevailing wage rate under the Davis-Bacon Act, 40 U.S.C. 276a – 276a-5, as amended, and the regulations adopted thereunder contained in 29 C.F.R. pt. 1 and 5.

ARTICLE 27: CONTRACT WORK HOURS AND SAFETY STANDARDS

As per the Contract Work Hours and Safety Standards Act (40 U.S.C. 3701-3708), where applicable, all CUSTOMER/END USER Purchase Orders in excess of $100,000 that involve the employment of mechanics or laborers must include a provision for compliance with 40 U.S.C. 3702 and 3704, as supplemented by Department of Labor regulations (29 CFR Part 5). Under 40 U.S.C. 3702 of the Act, each contractor must be required to compute the wages of every mechanic and laborer, on the basis of a standard work week of 40 hours. Work in excess of the standard work week is permissible provided that the worker is compensated at a rate of not less than one and a half times the basic rate of pay for all hours worked in excess of 40 hours in the work week. The requirements of 40 U.S.C. 3704 are applicable to construction work and provide that no laborer or mechanic must be required to work in surroundings or under working conditions which are unsanitary, hazardous, or dangerous. These requirements do not apply to the purchases of supplies or materials or articles ordinarily available on the open market, or contracts for transportation or transmission of intelligence.

ARTICLE 28: PROFIT AS A SEPARATE ELEMENT OF PRICE

For purchases using federal funds more than the current Simplified Acquisition Threshold of $250,000, requires negotiation of profit as a separate element of the price. See, 2 CFR 200.324(b). Contractor agrees to provide information and negotiate regarding profit as a separate element of the price for the purchase. Contractor also agrees that the total price, including profit, charged by Contractor will not exceed the awarded pricing, including any applicable discount, under any awarded contract.

ARTICLE 29: BYRD ANTI-LOBBYING AMENDMENT

Byrd Anti-Lobbying Amendment (31U.S.C. 1352) – Contractors that apply or bid for an award exceeding $100,000 must file the required anti-lobbying certification. Each tier must certify to the tier above that it will not and has not used Federal appropriated funds to pay any person or organization for influencing or attempting to influence an officer or employee of any agency, a member of Congress, officer or employee of Congress, or an employee of a member of Congress in connection with obtaining any Federal contract, grant or any other award covered by 31 U.S.C. 1352. Each tier must also disclose any lobbying with non-Federal funds that takes place in connection with obtaining any Federal award. Such disclosures are forwarded from tier to tier, up to the CUSTOMER/END USER. As applicable, Contractor agrees to file all certifications and disclosures required by, and otherwise comply with, the Byrd Anti-Lobbying Amendment (31 USC 1352). Contractor certifies that it is currently in compliance with all applicable provisions of the Byrd Anti-Lobbying Amendment (31 U.S.C. 1352) and will continue to be in compliance throughout the term of the Contract and further certifies that:

1. No Federal appropriated funds have been paid or will be paid by or on behalf of the Contractor, to any person for influencing or attempting to influence an officer or employee of any agency, a Member of Congress, an officer or employee of Congress, or an employee of a Member of Congress in connection

Docusign Envelope ID: EA4D9790-70A1-4C6E-89A3-6957C4F66B17

with the awarding of a Federal contract, the making of a Federal Grant, the making of a Federal Loan, the entering into a cooperative Master Agreement, and the extension, continuation, renewal, amendment, or modification of a Federal contract, grant, loan, or cooperative Master Agreement.

2. If any funds other than Federal appropriated funds have been paid or will be paid to any person for influencing, or attempting to influence, an officer or employee of a Member of Congress in connection with a Federal contract, grant, loan, or cooperative Master Agreement, Contractor shall complete and submit Standard Form – LLL, "Disclosure Form to Report Lobbying", in accordance with its instructions.
3. Contractor shall require that the language of this certification be included in the award documents for all subawards at all tiers (including subcontracts, subgrants, and contracts under grants, loans, and cooperative Master Agreements) and that all subcontractors shall certify and disclose accordingly.

This certification is a material representation of fact upon which reliance was placed when this transaction was made or entered into. Submission of this certificate is a prerequisite for making or entering into this transaction imposed by Section 1352, title 31, U.S. Code. Any person who fails to file the required certification shall be subject to a civil penalty of not less than $10,000 and not more than $100,000 for each such failure.

ARTICLE 30: COMPLIANCE WITH EPA REGULATIONS APPLICABLE TO GRANTS, SUBGRANTS, COOPERATIVE MASTER AGREEMENTS, AND CONTRACTS

Contractor certifies compliance with all applicable standards, orders, regulations, and/or requirements issued pursuant to the Clean Air Act of 1970, as amended (42 U.S.C. 1857(h)), Section 508 of the Clean Water Act, as amended (13 U.S.C. 1368), Executive Order 117389 and Environmental Protection Agency Regulation, 40 CFR Part 15.

ARTICLE 31: COMPLIANCE WITH ENERGY POLICY AND CONSERVATION ACT

Contractor certifies that Contractor will be in compliance with mandatory standards and policies relating to energy efficiency which are contained in the state energy conservation plan issued in compliance with the Energy Policy and Conservation Act (Pub. L. 94-163, 89 Stat. 871).

Docusign Envelope ID: EA4D9790-70A1-4C6E-89A3-6957C4F66B17

Attachment A
Siddons-Martin Emergency Group, LLC
Emergency Medical, Safety, and Rescue Equipment
Contract No.: EE11-24

Manufacturer	Item Description	HGACBuy Discount
343 Fire	Medical Equipment	5%
Junkin Safety	Patient Handling & First Aid	15%
Lightning X	Medical Supplies & First Aid	5%
Line2 Design	First Aid & Medical Equipment	5%
PMI	Rescue Equipment	5%
Matrix Henry Schein	Medical Equipment & Supplies	5%
R&B Fabrications	Medical Supplies & Equipment	5%
343 Fire	Safety Vest	10%
Accurate Law Enforcement	Team Wendy Helmets	5%
Black Diamond	Boots	5%
Boston Leather	Belts, Suspenders, Radio Holders	5%
Bullard	Helmets	10%
CMC	Boots, Gloves, Helmets, & Eyewear	10%
Draeger	Helmets	10%
Dragon Fire	Gloves	5%
Ergodyne	Gloves, Safety Vest, Safety Glasses, & Hard Hats	5%
Fire Dex	Turnout Gear, Gloves, Boots, & Hoods	42%
Fireninja	Safety Vest, Eyewear, & Hearing Protection	10%
Gemtor	Harnesses, & Ladder/Escape Belts	15%
Groves Ready Rack	PPE Waher / Dryer & Decon Products	5%
Haix	Boots	5%
HexArmor	Gloves, Helmets, Hearing Protection, Eyewear, & Body Protection	5%
Husky Portable Containment	Decon Shower & Pools	15%
Lakeland	Chemical Suits, Hand & Arm Protection, Safety Vest/Coats	5%
Line2 Design	Safety Vest	5%
Majestic	Hoods & Gloves	5%
Pac Mule Belts / JL2 Inc	Harness/Personal Safety Belt	5%
Peco Sales / Forestry Supplier	Helmets, Safety Vest, & Boots	5%
Phenix	Helmets	5%
PMI	Rope Gloves, & Helmets	5%
Portwest	Safety Vest/Coats, Gloves, Eye/Ear Protection, Gloves, & Boots	5%
R&B Fabrications	Safety Vest	$5
Rit Safety	Harnesses, Escape Belts, & Personal Search Lines	5%
SC Products	Decon Products	5%
Sensit / FireCraft	Gloves	5%
Shelby	Gloves	5%
Task Force Tips (TFT)	Gross Decon	25%
True North	Wildland Gear & Equipment	5%
Vanguard	Gloves	5%
343 Fire	Escape Bags, Hose Straps, & Ladder Boots	5%
Ajax Rescue Tools	Air Hammers	5%
ADH Fire Equipment Services Inc	Foam	10%
Akron	Nozzles, Monitors, Valves, & Lighting	5%
Alco-lite (Sam Carbis)	Ladders	5%
Amkus DeWalt	Rescue Tools & PPV Fans	3%
Arctic Compressor	Air Compressor	5%
B&B Fire	Nozzles, Valves,	20%
Blue Mountain / Sthil Dealer	Stihl Rescue Tools	15%
Buckeye Fire Equipment	Extinguishers	5%
Bullard	Thermal Imagers	5%
BullDog Hose	Fire Hose & Couplings	5%
Chemguard	Foam	5%
C&S Supply	Nozzles, Foam Products, Wildland Equipment, & Adapters	20%
CMC	Water Rescue, Rope Rescue, & Confined Space Rescue Equipment	10%
Command Light	Portable Lights	5%
Draeger	SCBA's & Gas Detection	10%
Duo Safety Ladder	Ladders	5%
Elkhart	Nozzles, Monitors, & Valves	20%
Fire Hooks Unlimited	Fire Tools, Hydra Ram, & Rescue Tools	5%
Firetech by HiViz LED Lighting	Light Towers and all Hi-Viz lighting products	5%
FireBull Enforcer	Foam	5%

Docusign Envelope ID: EA4D9790-70A1-4C6E-89A3-6957C4F66B17

Attachment A
Siddons-Martin Emergency Group, LLC
Emergency Medical, Safety, and Rescue Equipment
Contract No.: EE11-24

Flamefighter	Hose Testers, Fire Extinguisher Cabinets, Pike Poles, & SCBA Brackets	5%
Fol-Da-Tank	Portable Tanks, & Strainers	5%
Fox Manufacturing / Glas Master	Glass Removal Tool	5%
Great Wall of Rescue / Dunrite	Grain Bin Rescue	5%
Groves Ready Rack	Multi-Purpose Storage System & Hose winder	5%
Harrington	Gate Valve, Hydrant Valves, & Intake Valves	5%
Holmatro	Rescue Tools	5%
Husky Portable Containment	Folding Frame Tanks, Bladder Tanks, & Containment Tanks	5%
Key Fire Hose	Fire Hose	40%
Kochek	Nozzles, Adapters, Plugs, Spanners, Elbows, & Caps	20%
Kuriyama Fire Hose	Nozzles, & Hoses	5%
Leatherhead Tools	Fire Tools	5%
Little Giant	Ladders	10%
Makita	Rescue Tools & Portable Lights	5%
National Foam	Foam	5%
North American Fire Hose	Fire Hose	5%
Nupla	Hand Tools	5%
Performance Advantage	Tool Mounts, Brackets, & Bottle Holders	5%
Perimeter Solutions	Foam	5%
Pi Lit	Landing Zone Lights & Road Flare	5%
Peco Sales / Forestry Supplier	Wildland Tools	5%
Poly Tech	Rescue Tool Mounting Brackets	5%
PMI	Rescue Rope, Personal Flotation Device, & Water Rescue Equipment	5%
Power Hawk	Auto Crib It	5%
RamFan	Smoke Ejectors, Confined Space Fans, & PPV	5%
Red Head Brass	Couplings, Adapters, Valves, Nozzles & Fire Equipment	5%
Rescue Tech	Ascenders, Escape Kits, Confined Space Rescue & Rescue Equipment	5%
Rhyno	Windshield Cutter	5%
S&H Products	Nozzles, Wyes, Gated Valves, & Shut Off Valves	5%
SCBAS	Breathing Air System	5%
Scott 3M	SCBA Personal Breathing System	5%
Scotty Firefighter	Nozzles, Wrenches, Adapters, & Backpacks	5%
Sensible Products	Mounting Systems	10%
Sensit / FireCraft	Gas Detectors	0%
Siddons-Martin Poly Product	Tool Mounts	20%
Snap Tite / Fire Quip Hose	Fire Hose	5%
Streamlight	Portable Lights	5%
South Park Brass	Adapters, Valves, Caps, Elbows, Hose Equipment, SCBA Bracket / Straps, & Wrenches	5%
Super Vac	Positive Pressure, Confined Space, & Smoke Ejector Fans	15%
Task Force Tips (TFT)	Adapters, Valves, Caps, Elbows, Flow Meters, Eductors, & Gated Wyes	25%
Team Equipment	FLIR Imagers, & Rescue Saws	8%
Teledyne/Detcon	Portable Gas & Flame Detection	5%
Tempest	Blowers, Fans, Fire Blankets, Thermal Imagers, & Foam Equipment	5%
Tractel	Lifting / Hoisting Equipment	5%
Trident Emergency Products	Elbows, Adapter, Fittings, & Valves	20%
Turtle Plastics	Cribbing, Blocking, & Grain Bin Rescue	5%
U.S. Coupling	Equipment, Hose, & Couplings	5%
WaterAx	Pumps, associated products	5%
Whelen	All lighting Products	5%
Yates	Rope Rescue, Confined Space, Harnesses, & Lanyards	5%
Zephyr Industries	Wrenches, Tool Mounts, & Wheel Chocks	5%
Ziamatic Corp	Brackets, Bags, Tarps, & SCBA Storage	5%

Docusign Envelope ID: EA4D9790-70A1-4C6E-89A3-6957C4F66B17

3. Specifications/Categories/Scope of Work

This is an indefinite quantity/indefinite delivery offerings contract – The HGACBuy Customer is responsible to ensure adequate competition is performed between the various contractors or contractors outside of HGACBuy to determine price reasonableness that might be required per any funding agency. Customer will need to ensure compliance with any funding agency requirements before proceeding with a purchase order under this contract. Please consult legal counsel regarding questions concerning compliance as a contractor under this solicitation.

3.1. Categories

H-GAC is soliciting responses for selecting qualified manufacturers, dealers, and distributors of emergency medical, safety, and rescue equipment and supplies, to make these types of products and services available to Customers of the HGACBuy Cooperative Purchasing Program. In order to eliminate crossover and provide the most comprehensive selection of products to our members, HGACBuy is combining the previous EE08-19 Emergency Medical and Rescue Equipment contract and the EP11-20 Emergency Preparedness and Safety Equipment contract. This solicitation may include a request for a discount percent off price catalog, category, or manufacturer, or price list for equipment, supplies, or materials.

This Solicitation is divided into separate but related product categories. Respondent is advised to offer a wide array, or catalog, of services within each service category listed below. When submitting a response, Respondent may choose to submit a response to any of the categories or all of them. No additional weighted value will be assigned to a response that addresses more than one or all categories listed. All equipment must be the manufacturer's new and current model and must be fully operational upon delivery to the Customer.

Product categories are as follows:

A. Emergency Medical Equipment: comprehensive range of emergency medical response equipment and supplies including all types of defibrillators, work/public access automatic external defibrillators (AEDs), chest compression systems, patient monitoring equipment and supplies, patient transport equipment and supplies, patient treatment equipment and supplies, medical kits and bags, and other miscellaneous emergency medical equipment and supplies.

B. Emergency Safety Equipment: comprehensive range of emergency safety equipment including electronic personnel accountability systems and equipment, EMS/Fire/Law Enforcement personal protective equipment (PPE), turnout gear including coats, gloves, helmets, pants, etc., decontamination products and equipment, miscellaneous personal safety equipment and supplies, and other miscellaneous emergency safety equipment and supplies.

C. Emergency Rescue Equipment: comprehensive range of emergency rescue equipment and tools including all types of spreaders, cutters, and combination units, all types of rescue saws, thermal imaging equipment, drone and unmanned aerial vehicle (UAV) equipment, rams, shoring/stabilizing equipment, hoses and related equipment, breathing air systems and equipment, self-contained breathing apparatus (SCBA), portable lights, portable blowers and fans, air lift rescue equipment, all types of water rescue equipment including ice rescue, swift water rescue and flood rescue equipment,

Docusign Envelope ID: EA4D9790-70A1-4C6E-89A3-6957C4F66B17

flood response equipment and supplies, and other miscellaneous emergency rescue and response equipment and supplies.

(Category descriptions are not intended to be exhaustive or all-inclusive, but rather representative of the types of items in this category.)

3.2. Final Contract Deliverables

Contractor agrees to submit written quarterly reports to H-GAC detailing all transactions during the previous three (3) month period. Reports must include, but are not limited, to the following information:

- Customer Name and address
- HGACBuy confirmation number
- Product/Service purchased
- Customer Purchase Order Number
- Purchase Order Date
- Product/Service dollar amount
- HGACBuy Order Processing Charge amount

Reports must be provided to H-GAC in Excel or other acceptable electronic format by the 30th day of the month following the quarter being reported. If Contractor defaults in providing Products or Services reporting as required by the contract, recourse may be exercised through cancellation of the contract and other legal remedies as appropriate.

CITY OF FAYETTEVILLE ARKANSAS

CITY COUNCIL MEMO
2026-1961

MEETING OF JUNE 16, 2026

TO: Mayor Rawn and City Council

THROUGH: Brad Hardin, Fire Chief

FROM: Granville Wynn, Fire Operations Manager

SUBJECT: **Staff request approval to apply for the FY 2025 Staffing for Adequate Fire and Emergency Response (SAFER) Grant program.**

RECOMMENDATION:
Fire Department Administration recommends approval to apply for the FY 2025 Staffing for Adequate Fire and Emergency Response (SAFER) Grant program which, if awarded, will be used to hire 12 full-time firefighters to help facilitate four-person coverage on fire apparatus in the estimated amount of $1,848,461.

BACKGROUND:
The Department of Homeland Security (DHS) Federal Emergency Management Agency's (FEMA) Grant Programs Directorate implements and administers the Staffing for Adequate Fire and Emergency Response (SAFER) Grants. The Staffing for Adequate Fire and Emergency Response Grants (SAFER) was created to provide funding directly to fire departments and volunteer firefighter interest organizations to help them increase or maintain the number of trained, "front line" firefighters available in their communities.
The goal of SAFER is to enhance the local fire departments' abilities to comply with staffing, response and operational standards established by the NFPA (NFPA 1710).

DISCUSSION:
The Fire Department would like to utilize this opportunity to submit an application for the SAFER grant program to request funding for twelve (12) additional firefighter positions. Per the FY2025 Notice of Funding Opportunity Document, "if awarded, recipients are required to contribute 25 percent of the actual costs incurred in each of the first and second years of the grant; and 65 percent of the actual costs incurred in the third year of the grant. In the first and second years of the grant, the amount of federal funding may not exceed 75 percent of the usual annual cost of a first year firefighter in that department at the time the grant application was submitted; and in the third year of the grant the amount of federal funding may not exceed 35 percent of the usual annual cost of a first year firefighter in that department. The "usual annual cost" includes a firefighter's base salary (excluding non-FLSA overtime) and standard benefits package (including the average annual cost of health, dental, and vision insurance; FICA; life insurance; retirement and/or pension contributions; etc.) offered by the fire department to first-year firefighters." The SAFER Grant has a three–year period of performance.

BUDGET/STAFF IMPACT:
If awarded and accepted, the FY 2025 SAFER Grant Program will increase our full-time equivalent (FTE) staff by twelve (12) firefighter positions, and a budget adjustment will appropriate funding for the grant award. The City will incur the initial new hire expenses of training, bunker gear, uniforms, physical examinations, and non-scheduled overtime hours. This will be in addition to the 25% of actual costs incurred for the first year. The

“usual annual cost” includes a firefighter’s base salary (excluding non-FLSA overtime) and standard benefits package (including the average annual cost of health, dental, and vision insurance; FICA; life insurance; retirement and/or pension contributions; etc.). During the second year of the SAFER grant performance period, the City would pay 25% of actual costs incurred and the cost of non-scheduled overtime. In the third year of the SAFER grant performance period, the City would incur 65% of the actual costs incurred and the cost of non-scheduled overtime. The Budget Estimate Summary reflects estimated grant funds reimbursing the city approximately $1,848,461.00 with the City’s net estimated expenses over the grant period projected to be approximately $1,149,043.

ATTACHMENTS: 3. Staff Review Form, 4. FY2025 SAFER Grant Cost Estimate Summary, 5. FY2025 SAFER Grant Notice of Funding Opportunity (NOFO)

113 West Mountain Street
Fayetteville, AR 72701
(479) 575-8323

File #: 2026-1961

A RESOLUTION TO AUTHORIZE AN APPLICATION FOR A STAFFING FOR ADEQUATE FIRE AND EMERGENCY RESPONSE (SAFER) GRANT IN THE AMOUNT OF $1,848,461.00 TO HIRE 12 FULL-TIME FIREFIGHTERS

WHEREAS, the Federal Emergency Management Agency's Grant Programs Directorate implements and administers the Staffing for Adequate Fire and Emergency Response (SAFER) grant program; and

WHEREAS, SAFER grants were created to provide funding directly to fire departments and volunteer firefighter interest organizations to help them increase or maintain the number of trained "front line" firefighters available in their communities; and

WHEREAS, the goal of SAFER is to enhance a local fire department's ability to comply with staffing, response and operational standards established by the National Fire Protection Association; and

WHEREAS, the Fire Department would like to utilize this opportunity to submit an application for a SAFER grant to fund 12 additional firefighter positions.

NOW, THEREFORE, BE IT RESOLVED BY THE CITY COUNCIL OF THE CITY OF FAYETTEVILLE, ARKANSAS:

Section 1: That the City Council of the City of Fayetteville, Arkansas hereby authorizes Mayor Rawn to submit an application for the FY 2025 Staffing for Adequate Fire and Emergency Response (SAFER) grant in the amount of $1,848,461.00 to hire 12 full-time firefighters.

City of Fayetteville Staff Review Form

2026-1961

Item ID

6/16/2026

City Council Meeting Date - Agenda Item Only
N/A for Non-Agenda Item

Brad Hardin	5/28/2026	FIRE (300)
Submitted By	**Submitted Date**	**Division / Department**

Action Recommendation:

Fire Department Administration recommends approval to apply for the FY 2025 Staffing for Adequate Fire and Emergency Response (SAFER) Grant program which, if awarded, will be used to hire 12 full-time firefighters to help facilitate four-person coverage on fire apparatus in the estimated amount of $1,848,461.

Budget Impact:

Account Number	Fund
Project Number	Project Title

Budgeted Item?	No	Total Amended Budget	$	-
		Expenses (Actual+Encum)	$	-
		Available Budget	$	-
Does item have a direct cost?	No	Item Cost	$	-
Is a Budget Amendment attached?	No	Budget Amendment	$	-
		Remaining Budget	$	-

Purchase Order Number:

Previous Ordinance or Resolution #

Change Order Number:

Approval Date:

Original Contract Number:

Comments:

FY2025 SAFER GRANT Cost Estimate Summary

Resources	Year #1	Year #2	Year #3	Total
Salary	$999,168	$999,168	$999,168	$2,997,504
Uniforms, Equipment, & Physicals	$97,932	$21,732	$21,732	$141,396
Sub-Total	$1,097,100	$1,020,900	$1,020,900	$3,138,900
Federal Portion of Salary	($749,376)	($749,376)	($349,709)	($1,848,461)

The Department of Homeland Security (DHS)

Notice of Funding Opportunity (NOFO)

Fiscal Year 2025 Staffing for Adequate Fire and Emergency Response (SAFER) Grant Program

Fraud, waste, abuse, mismanagement, and other criminal or noncriminal misconduct related to this program may be reported to the Office of Inspector General (OIG) Hotline. The toll-free numbers to call are (800) 323-8603 and TTY (844) 889-4357.

Contents

1. Basic Information 4
A. Agency Name 4
B. NOFO Title 4
C. Announcement Type 4
D. Funding Opportunity Number 4
E. Assistance Listing Number 4
F. Expected Total Funding 4
G. Anticipated Number of Awards 4
H. Expected Award Range 4
I. Projected Application Start Date 4
J. Projected Application End Date 4
K. Anticipated Funding Selection Date 4
L. Anticipated Award Date 4
M. Projected Period of Performance Start Date 4
N. Projected Period of Performance End Date 4
O. Executive Summary 4
P. Agency Contact 5
2. Eligibility 6
A. Eligible Entities/Entity Types 6
B. Project Type Eligibility 7
C. Requirements for Personnel, Partners, and Other Parties 8
D. Maximum Number of Applications 8
E. Additional Restrictions 8
F. References for Eligibility Factors within the NOFO 10
G. Cost Sharing Requirement 10
H. Cost Share Description, Type and Restrictions 10
I. Cost Sharing Calculation Example 11
J. Required information for verifying Cost Share 11
3. Program Description 11
A. Background, Program Purpose, and Program History 11
B. Goals and Objectives 12
C. Program Rationale 12
D. Federal Assistance Type 13

E. Performance Measures and Targets 13
F. Program-Specific Unallowable Costs 13
G. General Funding Requirements 13
H. Indirect Costs (Facilities and Administrative Costs) 14
I. Management and Administration (M&A) Costs 14
J. Pre-Award Costs 14
K. Beneficiary Eligibility 15
L. Participant Eligibility 15
M. Authorizing Authority 15
N. Appropriation Authority 15
O. Budget Period 15
P. Prohibition on Covered Equipment or Services 15
4. Application Contents and Format 15
A. Pre-Application, Letter of Intent, and White Papers 15
B. Application Content and Format 15
C. Application Components 16
D. Program-Specific Required Documents and Information 16
E. Post-Application Requirements for Successful Applicants 16
5. Submission Requirements and Deadlines 16
A. Address to Request Application Package 16
B. Application Deadline 18
C. Pre-Application Requirements Deadline 18
D. Post-Application Requirements Deadline 19
E. Effects of Missing the Deadline 19
6. Intergovernmental Review 19
A. Requirement Description and State Single Point of Contact 19
7. Application Review Information 19
A. Threshold Criteria 19
B. Application Criteria 20
C. Financial Integrity Criteria 20
D. Supplemental Financial Integrity Criteria and Review 21
E. Reviewers and Reviewer Selection 21
F. Merit Review Process 21
G. Final Selection 25
8. Award Notices 25
A. Notice of Award 25
B. Pass-Through Requirements 26
C. Note Regarding Pre-Award Costs 26
D. Obligation of Funds 26
E. Notification to Unsuccessful Applicants 26
9. Post-Award Requirements and Administration 26
A. Administrative and National Policy Requirements 26
B. DHS Standard Terms and Conditions 27
C. National Incident Management System (NIMS) Implementation 28
D. Financial Reporting Requirements 28
E. Programmatic Performance Reporting Requirements 28

F. Closeout Reporting Requirements 29
G. Disclosing Information per 2 C.F.R. § 180.335 29
H. Reporting of Matters Related to Recipient Integrity and Performance 30
I. Single Audit Report 30
J. Monitoring and Oversight 30
K. Program Evaluation 31
L. Additional Performance Reporting Requirements 32
M. Termination of Federal Award 32
M. Best Practices 34
N. Payment Information 34
O. Immigration Conditions 36
10. Other Information 36
A. Period of Performance (POP) Extension 36
B. Other Information 37
11. Appendix A – FY 2025 SAFER Program Updates 43
12. Appendix B – Programmatic Information and Priorities 43
A. Ineligible Applications and Organizations 43
B. Supporting Definitions for this NOFO 44
C. Application Tips 48
D. Funding Limitation 49
E. Funding Priorities 49
F. Hiring Activity Overview 50
G. R&R Activity – Fire Departments Overview 51
H. R&R Activity – National, State, Local, Territorial, or Federally Recognized Tribal Nation Volunteer Firefighter Interest Organizations (Interest Organizations) Overview 54
I. Eligible and Ineligible Costs and Requirements 55
13. Appendix C – Award Administration Information 64
A. Help FEMA Prevent Fraud, Waste and Abuse 64
B. Grant Writer and Preparation Fees 64
C. Maintenance and Sustainment 65
D. Taxes, Fees, Levies and Assessments 65
E. Excess Funds 66
F. Payments and Amendments 66
G. Disposition of Grant-Funded Equipment 68
H. Post-Award Recipient Responsibilities 68

1. Basic Information

A. Agency Name	U.S. Department of Homeland Security (DHS), Federal Emergency Management Agency (FEMA), Resilience/Grant Programs Directorate (GPD)
B. NOFO Title	Fiscal Year (FY) 2025 Staffing for Adequate Fire and Emergency Response (SAFER) Grant
C. Announcement Type	Initial
D. Funding Opportunity Number	DHS-25-GPD-083-00-99
E. Assistance Listing Number	97.083
F. Expected Total Funding	$324 million
G. Anticipated Number of Awards	190 awards
H. Expected Award Range	N/A
I. Projected Application Start Date	May 19, 2026 at 8 a.m. ET
J. Projected Application End Date	June 22, 2026 at 5 p.m. ET
K. Anticipated Funding Selection Date	No later than September 30, 2026
L. Anticipated Award Date	Beginning on approximately September 14, 2026, and continuing thereafter until all FY 2025 SAFER Program grant awards are issued (but no later than September 30, 2026).
M. Projected Period of Performance Start Date	N/A[1]
N. Projected Period of Performance End Date	N/A
O. Executive Summary	The FY 2025 SAFER Grant Program, known as the SAFER Program, is one of three grant programs from DHS and FEMA that improve

[1] FEMA funds SAFER Program awards on a rolling basis; as such, the date the FEMA Assistant Administrator for the Grant Programs Directorate signs the obligating document dictates the unique Period of Performance start and end dates for each award.

	public and firefighter safety related to fire hazards. The SAFER Program provides funding directly to fire departments and volunteer firefighter organizations to increase the number of firefighters. This funding supports communities in meeting industry standards, achieving 24-hour staffing, and ensuring adequate protection from fire hazards while supporting the traditional missions of fire departments. Since its launch in 2005, the SAFER Program has awarded approximately $6.1 billion in grants. These funds have been used to hire new firefighters, convert part-time or paid-on-call firefighters to full-time roles, and recruit and retain volunteer firefighters. For examples of how this program has made a difference, visit the Assistance to Firefighters Grants Program page on FEMA.gov.
P. Agency Contact	**a.** ***Fire Grants Program Office Contact*** The Fire Grants Program Help Desk provides technical assistance to applicants for the online completion and submission of applications into FEMA Grants Outcomes (FEMA GO), answers questions concerning applicant eligibility, recipient responsibilities, and helps in the programmatic administration of awards. The Fire Grants Program Help Desk can be contacted at (866) 274-0960 or by email at FireGrants@fema.dhs.gov. Normal hours of operation are Monday through Friday, 8:00 a.m. – 4:30 p.m. ET. Guidance documents such as application tutorials, Self-Evaluation Guides, and Frequently Asked Questions (FAQs) are also provided to further explain the current SAFER Program, assist with the online grant application, and highlight lessons learned and changes for FY 2025. For more details, please visit the SAFER Program website. **b.** ***FEMA Grants News*** This channel provides general information on all FEMA grant programs and maintains a comprehensive database containing key personnel contact information at the federal, state, and local levels. FEMA Grants News Team is reachable at fema-grants-news@fema.dhs.gov OR (800) 368-6498, Monday through Friday, 9 a.m. – 5 p.m. ET. **c.** ***Grant Programs Directorate (GPD) Award Administration Division*** GPD's Award Administration Division (AAD) provides support regarding financial matters and budgetary technical assistance. AAD can be contacted at ASK-GMD@fema.dhs.gov. **d.** ***FEMA Regional Offices*** Assistance to Firefighters Grants Regional Contacts also may provide fiscal support, including pre- and post-award administration and technical assistance. Assistance to Firefighters Grants Regional Office

	contacts are available at Assistance to Firefighters Grants Regional Contacts | FEMA.gov. **e.** ***Civil Rights*** Consistent with Executive Order 14173, Ending Illegal Discrimination & Restoring Merit-Based Opportunity, the FEMA Integration and Coordination Division (ICD) is responsible for ensuring compliance with and enforcement of federal civil rights obligations in connection with programs and services conducted by FEMA. They are reachable at fema-ocr@fema.dhs.gov. **f.** ***Environmental Planning and Historic Preservation*** The FEMA Office of Environmental Planning and Historic Planning (OEHP) provides guidance and information about the EHP review process to FEMA programs and recipients and subrecipients. Send any inquiries regarding compliance for FEMA grant projects under this NOFO to FEMA-OEHP-NOFOQuestions@fema.dhs.gov. ***g. Payment and Reporting System*** FEMA uses FEMA GO for financial reporting, invoicing, and tracking payments. The Direct Deposit/Electronic Funds Transfer (DD/EFT) method of payment is used for recipients. For any questions about the system, contact the FEMA GO Helpdesk at femago@fema.dhs.gov or (877) 585-3242, Monday through Friday, 9 a.m. – 6 p.m. ET. ***h. FEMA GO*** For technical assistance with the FEMA GO system, please contact the FEMA GO Helpdesk at femago@fema.dhs.gov or (877) 585-3242, Monday through Friday, 9 a.m. – 6 p.m. ET.

2. Eligibility

A. Eligible Entities/Entity Types	Only the following entities or entity types are eligible to apply. **a.** ***Applicants*** • Fire departments; and • National, regional, state, local, tribal and nonprofit interest organizations[2] representing the interests of volunteer firefighters are eligible to receive a SAFER Program award under the Recruitment and Retention (R&R) Activity.

[2] The District of Columbia, the Commonwealth of the Northern Mariana Islands, the U.S. Virgin Islands, Guam, American Samoa, and the Commonwealth of Puerto Rico are all defined as "States" in the Federal Fire Prevention and Control Act of 1974. See 15 U.S.C. § 2203(10).

	See Section A of Appendix B – Programmatic Information and Priorities for additional information on ineligible applications and organizations. **b. *Subapplicants*** Subapplicants and subawards are not allowed. Subapplicants should not have foreign nationals or noncitizens included. If a subapplicant has foreign nationals, they must be properly vetted and must adhere to all government statutes, policies and procedures including "staff American, stay in America" and security requirements.
B. Project Type Eligibility	**a. *Unallowable Project Types*** • Under the Recruitment and Retention (R&R) Activity, applications that request a Staffing Needs Assessment or Risk Assessment project are precluded from applying for additional R&R-related activities. • FEMA will not fund any projects, activities or line items that are covered under a department's normal operating budget. Federal funding may not be used to supplant (i.e., replace) an existing activity or program. • Applicants may not use award funds for matching funds for any other federal grants or cooperative agreements, for lobbying, or for intervention in federal regulatory or adjudicatory proceedings. Applicants may not use federal funds to sue the Federal Government or any other government entity. **b. *Allowable Project Types*** 1. Hiring Activity The Hiring Activity provides grants to support fire departments in hiring new firefighters or converting part-time or paid-on-call firefighters to full-time positions. However, national, regional, state, local, Tribal Nation, and nonprofit organizations that represent volunteer firefighters are not eligible for SAFER Program awards under the Hiring Activity. 2. R&R Activity The R&R Activity provides grants to help fire departments recruit and retain volunteer firefighters trained in firefighting and emergency response operations. Career fire departments are not eligible for funding under the R&R Activity.

	Each activity has its own application and eligibility requirements, as further outlined in Appendix B – Programmatic Information and Priorities of this NOFO.
C. Requirements for Personnel, Partners, and Other Parties	An application submitted by an otherwise eligible non-federal entity (i.e., the applicant) may be deemed ineligible when the person that submitted the application is not: **1) a current employee, personnel, official, staff, or leadership of the non-federal entity; and 2) duly authorized to apply for an award on behalf of the non-federal entity at the time of application**. Further, the Authorized Organization Representative (AOR) must be a duly authorized current employee, personnel, official, staff, or leadership of the recipient and **provide an email address unique to the recipient at the time of application and upon any change in assignment during the period of performance (POP). Consultants or contractors of the recipient are not permitted to be the AOR of the recipient.** Subapplicants should not have foreign nationals or noncitizens included. If a subapplicant has foreign nationals, they must be properly vetted and must adhere to all government statues, polices, and procedures including "staff American, stay in America" and security requirements. Subapplicants/subrecipients must submit short bios and resumes. This should include the type of entity, organizational leadership, and board members along with the both the names and addresses of the individuals. Resumes are subject to approval.
D. Maximum Number of Applications	The maximum number of applications that can be submitted is one application per activity.
E. Additional Restrictions	**a.** ***POP Restrictions*** 1. Hiring Activity The POP for applications funded under the Hiring Activity will be 36 months. A default 180-day recruitment period begins when FEMA approves an application for an award under this activity. The 36-month POP automatically starts after the 180-day recruitment period, regardless of whether the recipient has hired the requested firefighters. The POP cannot start later than 180 days after the award date.

	If a recipient can hire all SAFER Program-funded firefighters during the 180-day recruitment period, the POP may begin at that time. In these instances, recipients must submit an amendment requesting that the POP start before the end of the 180-day recruitment period if they wish to begin the period early. 2. R&R Activity The POP for applications funded under the R&R Activity will be 12, 24, 36 or 48 months. A default 90-day recruitment period begins when FEMA approves the application for award under this activity. This period allows each recipient time to gather resources, initiate processes, and finalize contracts needed to implement SAFER Program activities before the start of the POP. By the start of the POP, the recipient should be fully prepared to implement all awarded activities and begin drawing down awarded funds. The recipient can only expend funds within the POP. The POP automatically starts after the 90-day recruitment period ends, regardless of whether the recipient has begun implementing its grant award. The POP cannot start later than 90 days after the award date. If a recipient can begin its recruitment or retention activities during the 90-day recruitment period, the POP may begin at that time. In these instances, recipients must submit an amendment requesting that the POP start before the end of the 90-day recruitment period if they wish to begin the period early. Extensions to the POP are allowed for R&R Activity grants only. Recipients must submit all proposed extension requests to FEMA for review and approval at least 120 days before the end of the POP to allow sufficient processing time. For additional information on POP extensions, please refer to Section 10.A. **b.** ***National Incident Management System (NIMS) Implementation*** SAFER Program applicants are not required to comply with NIMS to apply for SAFER Program funding or to receive a SAFER Program award. Any applicant who receives an FY 2025 SAFER Program award must achieve the level of NIMS compliance required by the Authority Having Jurisdiction (AHJ) over the applicant's emergency service operations (e.g., a local government), before the end of the grant's POP.

	Applicants/subapplicants or recipients/subrecipients are required to certify their compliance with federal statutes, DHS directives, polices, and procedures.
F. References for Eligibility Factors within the NOFO	Please see the following references provided below: 1.“Responsiveness Review Criteria” subsection 2 “Threshold Criteria” subsection 3 “Application Criteria” subsection 4. FEMA may/will request financial information such as Employer Identification Number (EIN) and bank information as part of the potential award selection. This will apply to everyone prospered, including subrecipients. 5. “Supplemental Financial Integrity Criteria and Review” subsection 6. Appendix B – Programmatic Information and Priorities
G. Cost Sharing Requirement	For Hiring Activity grants, applicants selected for this award must commit to an acceptable cost share agreement. Otherwise, they will not be funded. For R&R Activity grants, there is no cost share requirement. Please see Application Criteria for more information.
H. Cost Share Description, Type and Restrictions	For Hiring Activity grants, recipients are required to contribute 25% of the actual costs incurred in each of the first and second years of the grant; and 65% of the actual costs incurred in the third year of the grant. In the first and second years of the grant, the amount of federal funding may not exceed 75% of the usual annual cost of a first-year firefighter in that department at the time the grant application was submitted; and in the third year of the grant the amount of federal funding may not exceed 35% of the usual annual cost of a first-year firefighter in that department. The “usual annual cost” includes a firefighter’s base salary (excluding non-Fair Labor Standards Act overtime) and standard benefits package (including the average annual cost of health, dental, and vision insurance; FICA; life insurance; retirement and/or pension contributions; etc.) offered by the fire department to first-year firefighters. For R&R Activity grants, there is no cost share requirement.

I. Cost Sharing Calculation Example	Assuming that the usual annual cost of a first-year firefighter in a department at the time of the grant application is $120,000 per year and the department actually incurred $100,000 per year in each year of the grant, the following cost share requirements and position cost limits would apply: 1. Cost Share Requirement: The grant recipient is required to contribute $25,000 in Year 1; $25,000 in Year 2; and $65,000 in Year 3. 2. Position Cost Limit: The amount of federal funding cannot exceed $90,000 in Year 1; $90,000 in Year 2; and $42,000 in Year 3.
J. Required information for verifying Cost Share	FEMA does not require recipients to demonstrate availability of cost share funds at the time of application. However, before FEMA issues an award, it may contact potential awardees to determine whether the recipient possesses the necessary non-federal funding. **a.** ***Minimum Budget Requirement*** In accordance with 15 U.S.C. § 2229a(c)(2), in order to be eligible for SAFER Program funding, applicants are required to certify that their annual budget for fire-related programs and emergency response has not been reduced below 80% of the applicant's average funding level in the three years prior to the application date. As part of each SAFER application, applicants are required to provide their total annual operating budget for the current fiscal year and the three years prior.

3. Program Description

A. Background, Program Purpose, and Program History
The FY 2025 SAFER Grant Program is one of three grant programs that constitute DHS and FEMA's focus on protecting the public and firefighters from fire and fire-related hazards. The SAFER Program provides funding directly to fire departments and volunteer firefighter interest organizations to assist in increasing the number of firefighters to help communities meet industry minimum standards and attain 24-hour staffing to provide adequate fire protection from fire and fire-related hazards, and to fulfill traditional missions of fire departments. Since 2005, the SAFER Program has awarded approximately $6.1 billion in grant funding to provide critically needed resources to hire new, additional firefighters (or to change the status of part-time or paid-on-call firefighters to full-time firefighters), as well as recruitment and retention of volunteer firefighters. Information about success stories for this program can be found at Assistance to Firefighters Grants Program | FEMA.gov.

The SAFER Program is part of a comprehensive set of measures authorized by Congress and implemented by DHS. In awarding grants, the FEMA Administrator is required to consider:

- The findings and recommendations of the Technical Evaluation Panel;

- The degree to which an award will reduce deaths, injuries, and property damage by reducing the risks associated with fire-related and other hazards;
- The extent of an applicant's need for a SAFER Program grant and the need to protect the United States as a whole; and
- The number of calls requesting or requiring a firefighting or emergency medical response received by an applicant.

B. Goals and Objectives

Goal: To enhance local fire departments' abilities to comply with staffing, response, and operational standards established by the National Fire Protection Association (NFPA 1710 or NFPA 1720).[3]

Objectives: The objectives of the SAFER Program are to provide funding to communities so they can:

- Increase the number of firefighters to meet industry minimum standards;
- Increase the number of trained personnel assembled at the incident scene;
- Attain 24-hour staffing to improve deployment capabilities; and
- Fulfill traditional missions of fire departments (respond to emergencies and provide adequate fire protection from fire and fire-related hazards).

Priorities: Information on program priorities and objectives for the FY 2025 SAFER Program can be found in Appendix B – Programmatic Information and Priorities of this NOFO.

C. Program Rationale

The SAFER Program represents part of a comprehensive set of measures authorized by Congress and implemented by DHS. Among the six DHS Missions noted in the Department of Homeland Security's Strategic Plan, the SAFER Program supports Mission Five: Build a Resilient Nation and Respond to Incidents. By increasing the number of trained firefighters, the SAFER Program improves deployment capabilities to respond to emergencies and provide adequate protection from fire and fire-related hazards. The SAFER Program also aims to support objectives outlined under Mission Five in the Strategic Plan including:

- Objective 5.1: Coordinate Federal Response to Incidents
- Objective 5.2: Strengthen National Resilience
- Objective 5.4: Enhance Training and Readiness of First Responders

Through these objectives, FEMA creates a vision for the field of emergency management and sets an ambitious, yet achievable, path forward to unify and further professionalize emergency

[3] NFPA 1710 and 1720 are lapsing in 2026 and will be consolidated under the proposed NFPA 1750. FEMA is working with the NFPA Standards Council to evaluate deployment of fire suppression operations. No decisions have been made, and FEMA will issue additional guidance when more information becomes available. Although the goal of the grant is to increase compliance with NFPA 1710 or 1720, 24-hour staffing is not a requirement of the SAFER Program.

management across the country. We invite all our stakeholders and partners to join us in building a more prepared and resilient nation.

D. Federal Assistance Type
Grant

E. Performance Measures and Targets
Grant recipients must collect data to help FEMA evaluate the performance of SAFER Program grants. These metrics align with the program's objectives and priorities. FEMA may request performance data throughout the grant's POP. At closeout, recipients must submit a final performance report with enough information to show they met the performance goals outlined in their award.

FEMA will assess performance by comparing the items, supplies, projects and activities requested in the application to those acquired and delivered by the end of the performance period. The following program metrics will be used:

- **Hiring Activity:**
  1. Percentage of "majority career" SAFER Program recipients' structural fire responses that complied with National Fire Protection Association (NFPA) 1710 structural response standards.
  2. Number of full-time career firefighter positions filled.
- **R&R Activity:**
  1. Percentage of "majority volunteer" SAFER Program recipients' structural fire responses that complied with National Fire Protection Association (NFPA) 1720 structural response standards.
  2. Number of operational volunteer firefighters who have joined a department.

The target for these measures is the number of firefighters hired and the resulting improvement in compliance with NFPA 1710 or 1720 standards. FEMA will assess how the addition of new firefighters increased compliance with the relevant NFPA standards.

F. Program-Specific Unallowable Costs
Construction costs are not allowable under the SAFER Program. Construction includes major alterations to a building that changes the profile or footprint of the structure.

Modifications to facilities described in Appendix B – Programmatic Information and Priorities are not categorized as construction costs for general award purposes and may be eligible for funding. However, these activities may be considered 'construction' for procurement, environmental protection, or historic preservation purposes.

Please see Appendix B – Programmatic Information and Priorities for additional information on funding restrictions and allowable costs.

G. General Funding Requirements

Costs charged to federal awards (including federal and non-federal cost share funds) must comply with applicable statutes, rules and regulations, policies, this NOFO, and the terms and conditions of the federal award. This includes, among other requirements, that costs must be incurred, and products and services must be delivered within the budget period. 2 C.F.R. § 200.403(h).

Recipients may not use federal funds or any cost share funds for the following activities:

1. Matching or cost sharing requirements for other federal grants and cooperative agreements (see 2 C.F.R. § 200.306).
2. Lobbying or other prohibited activities under 18 U.S.C § 1913 or 2 C.F.R. § 200.450.
3. Prosecuting claims against the federal government or any other government entity (see 2 C.F.R. § 200.435).

H. Indirect Costs (Facilities and Administrative Costs)
Indirect costs are allowed for recipients.
Indirect costs (IDC) are costs incurred for a common or joint purpose benefitting more than one cost objective and not readily assignable to specific cost objectives without disproportionate effort. Applicants with a current negotiated IDC rate agreement who want to charge indirect costs to a federal award must provide a copy of their IDC rate agreement with their applications. Not all applicants are required to have a current negotiated IDC rate agreement. Applicants that are not required to have a negotiated IDC rate agreement, but are required to develop an IDC rate proposal, must provide a copy of their proposal with their applications. Applicants without a current negotiated IDC rate agreement (including a provisional rate) and wish to charge the de minimis rate must reach out to FEMA for further instructions. Applicants who wish to use a cost allocation plan in lieu of an IDC rate proposal must reach out to FEMA for further instructions. As it relates to the IDC for subrecipients, a recipient must follow the requirements of 2 C.F.R. §§ 200.332 and 200.414 in approving the IDC rate for subawards.

I. Management and Administration (M&A) Costs
M&A costs are allowed only under the R&R Activity and are not allowed under the Hiring Activity.

Recipients may use up to 3% of the federal share of SAFER Program funds for M&A costs directly related to managing and administering the SAFER award, such as financial management and monitoring. These costs must be based on actual expenses or known contractual costs. Requests based on simple percentages of the award or unsupported estimates will not be approved or reimbursed. Salaries and fringe benefits for personnel directly supporting the grant do not need to be included in the M&A budget line item.

M&A are not overhead costs but are necessary direct costs incurred in direct support of the federal award or as a consequence of it, such as travel, meeting-related expenses, and salaries of full/part-time staff in direct support of the program. As such, M&A costs can be itemized in financial reports.

J. Pre-Award Costs
The following pre-award costs are allowable:

1. Fees for grant writers (capped at $1,500 of federal funds per application).

Generally, grant funds cannot be used to pay for products and services contracted for or obligated prior to the effective date of the award.

See Appendix C – Award Administration Information for further information regarding grant writer fees and Section 10.B. Other Information for general procurement under grants requirements.

K. Beneficiary Eligibility
There are no program requirements to be an eligible beneficiary. This NOFO and any subsequent federal awards create no rights or causes of action for any beneficiary.

L. Participant Eligibility
There are no program requirements to be an eligible participant. This NOFO and any subsequent federal awards create no rights or causes of action for any participant.

M. Authorizing Authority
Section 34 of the Federal Fire Prevention and Control Act of 1974, Pub. L. No. 93-498, as amended (15 U.S.C. § 2229a).

N. Appropriation Authority
Full-Year Continuing Appropriations and Extensions Act, 2025, Pub. L. No. 119-4, § 1101.

O. Budget Period
There will be only a single budget period with the same start and end dates as the POP.

P. Prohibition on Covered Equipment or Services
Recipients, sub-recipients, and their contractors or subcontractors must comply with the prohibitions set forth in Section 889 of the John S. McCain National Defense Authorization Act for Fiscal Year 2019, which restrict the purchase of covered telecommunications and surveillance equipment and services. Please see 2 C.F.R. §§ 200.216, 200.327, 200.471, and Appendix II to 2 C.F.R. Part 200, and FEMA Policy #405-143-1 - Prohibitions on Expending FEMA Award Funds for Covered Telecommunications Equipment or Services for more information.

4. Application Contents and Format

A. Pre-Application, Letter of Intent, and White Papers
Pre-applications, letters of intent, and white papers are not required to be eligible to apply.

B. Application Content and Format
Applications are processed through the FEMA GO system. To access the system, go to https://go.fema.gov/.

Specific formatting guidelines can be found on page 21 of this NOFO.

Additional application and program guidance documents such as Fact Sheets, Self Evaluation Sheets, and an Application Checklist are available at the SAFER Program website.

C. Application Components
The following forms or information are required to be submitted via FEMA GO. The Standard Forms (SF) are also available at Forms | Grants.gov.

- SF-424, Application for Federal Assistance
- Grants.gov Lobbying Form, Certification Regarding Lobbying
- SF-424A, Budget Information (Non-Construction)
- SF-424B, Standard Assurances (Non-Construction)
- SF-LLL, Disclosure of Lobbying Activities

D. Program-Specific Required Documents and Information
The following program-specific document is required to be submitted as an attachment in FEMA GO for each regional project under the R&R Activity:

1. Regional host applicants and participating partner agencies must execute a Memorandum of Understanding (MOU), or equivalent document signed by the host and all participating organizations participating in the award.

E. Post-Application Requirements for Successful Applicants
Applicants likely to be funded may receive a request for additional information by email prior to award. Applicants must respond to the request to move forward with the grant review process.

5. Submission Requirements and Deadlines

A. Address to Request Application Package
Applications are processed through the FEMA GO system. To access the system, go to https://go.fema.gov/.

Steps Required to Apply for An Award Under This Program and Submit an Application:

All applicants must:

a. Apply for, update, or verify their Unique Entity Identifier (UEI) number and EIN from the Internal Revenue Service;
b. In the application, provide an UEI number;
c. Have an account with login.gov;
d. Register for, update, or verify their System for Award Management (SAM) account and ensure the account is active before submitting the application;
e. Register in FEMA GO, add the organization to the system, and establish the AOR. The organization's electronic business point of contact (eBiz POC) from the SAM registration may need to be involved in this step. For step-by-step instructions, see https://www.fema.gov/media-library/assets/documents/181607;
f. Submit the complete application in FEMA GO; and

g. Continue to maintain an active SAM registration with current information at all times during which it has an active federal award or an application or plan under consideration by a federal awarding agency. As part of this, applicants must also provide information on an applicant's immediate and highest-level owner and subsidiaries, as well as on all predecessors that have been awarded federal contracts or federal financial assistance within the past three years, if applicable.

Per 2 C.F.R. § 25.110(a)(2)(iv), if an applicant is experiencing exigent circumstances that prevents it from obtaining an UEI number and completing SAM registration before receiving a federal award, the applicant must notify FEMA as soon as possible. Contact fema-grants-news@fema.dhs.gov and provide the details of the exigent circumstances.

How to Register to Apply:

General Instructions:

Registering and applying for an award under this program is a multi-step process and requires time to complete. Below are instructions for registering to apply for FEMA funds. Read the instructions carefully and prepare the requested information before beginning the registration process. Gathering the required information before starting the process will alleviate last-minute searches for required information.

The registration process can take up to four weeks to complete. To ensure an application meets the deadline, applicants are advised to start the required steps well in advance of their submission.

Organizations must have a UEI number, EIN, and an active SAM registration.

Obtain a UEI Number:

All entities applying for funding, including renewal funding, must have a UEI number. Applicants must enter the UEI number in the applicable data entry field on the SF-424 form. For more detailed instructions for obtaining a UEI number, refer to SAM.gov.

Obtain Employer Identification Number:

In addition to having a UEI number, all entities applying for funding must provide an EIN. The EIN can be obtained from the Internal Revenue Service (IRS) by visiting https://www.irs.gov/businesses/small-businesses-self-employed/apply-for-an-employer-identification-number-ein-online.

Create a login.gov account:

Applicants must have a login.gov account in order to register with SAM or update their SAM registration. Applicants can create a login.gov account at https://secure.login.gov/sign_up/enter_email?request_id=34f19fa8-14a2-438c-8323-a62b99571fd.

Applicants only have to create a login.gov account once. For existing SAM users, use the same email address for both login.gov and SAM.gov so that the two accounts can be linked.

For more information on the login.gov requirements for SAM registration, refer to https://www.sam.gov/SAM/pages/public/loginFAQ.jsf.

Register with SAM:

In addition to having a UEI number, all organizations must register with SAM. Failure to register with SAM will prevent your organization from applying through FEMA GO. SAM registration must be renewed annually and must remain active throughout the entire grant life cycle.

For more detailed instructions for registering with SAM, refer to: Register with SAM

Note: per 2 C.F.R. § 25.200 , applicants must also provide the applicant's immediate and highest-level owner, subsidiaries, and predecessors that have been awarded federal contracts or federal financial assistance within the past three years, if applicable.
Register in FEMA GO, Add the Organization to the System, and Establish the AOR:

Applicants must register in FEMA GO and add their organization to the system. The organization's eBiz POC from the SAM registration may need to be involved in this step. For step-by-step instructions, see: FEMA GO Startup Guide

Note: FEMA GO will support only the most recent major release of the following browsers:

- Google Chrome;
- Mozilla Firefox;
- Apple Safari; and
- Microsoft Edge.

Applicants using tablet type devices or other browsers may encounter issues with using FEMA GO.

Submitting the Final Application:

Applicants will be prompted to submit the standard application information, and any program-specific information required. SFs may be accessed in the Forms tab under the: SF-424 Family | Grants.gov.

Applicants should review these forms before applying to ensure they are providing all required information.

After submitting the final application, FEMA GO will provide either an error message, or an email to the submitting AOR confirming the transmission was successfully received.

B. Application Deadline
June 22, 2026 at 5 p.m. ET

C. Pre-Application Requirements Deadline
Not applicable.

D. Post-Application Requirements Deadline
Not applicable.

E. Effects of Missing the Deadline
All applications must be completed in FEMA GO by the application deadline. FEMA GO automatically records proof of submission and generates an electronic date/time stamp when FEMA GO successfully receives an application. The submitting AOR will receive via email the official date/time stamp and a FEMA GO tracking number to serve as proof of timely submission prior to the application deadline.

Applicants experiencing system-related issues have until 3 p.m. ET on the date applications are due to notify FEMA. No new system-related issues will be addressed after this deadline. Applications not received by the application submission deadline will not be accepted.

6. Intergovernmental Review

A. Requirement Description and State Single Point of Contact
An intergovernmental review may be required. Applicants must contact their state's Single Point of Contact (SPOC) to comply with the state's process under Executive Order 12372.

7. Application Review Information

A. Threshold Criteria
FEMA reviews a random sample of applications to check for duplication, including narrative statements and statistical data. All narrative statements must be specific and unique to the applicant, and all statistical data must be accurate. Applications with narrative statements that substantially duplicate content from other applications or contain inaccurate data that could mislead reviewers may be disqualified. Any discovery of falsification, fabrication or plagiarism will result in disqualification.

Note: FEMA evaluates each application based on its merit, accuracy and how well the narrative reflects the applicant's unique circumstances, risks and needs. FEMA also considers how selecting the applicant advances the SAFER Program's goal of helping fire departments improve staffing and deployment to respond to emergencies and protect communities from fire-related hazards.

During the review process, including the technical review stage, FEMA may request additional documentation, such as:

- Official or certified documents demonstrating the claimed financial need;
- A needs assessment report, survey, or other documentation showing the applicant's unique project objectives;
- A risk analysis explaining how the project addresses the applicant's specific needs and aligns with the SAFER Program's purpose;
- Additional information or evidence detailing the applicant's risks; and
- Any other information needed to evaluate the funding request.

Important: Funding is not guaranteed for any applicant.

B. Application Criteria
FEMA sets funding priorities and evaluation criteria for SAFER Program applications based on recommendations from the Criteria Development Panel (CDP). Each year, FEMA brings together a panel of fire service professionals to establish these priorities and criteria. The panel provides input on funding priorities and helps develop the criteria used to award grants.

The **nine major fire service organizations** represented on the panel are:

- International Association of Fire Chiefs
- International Association of Fire Fighters
- National Volunteer Fire Council
- National Fire Protection Association
- National Association of State Fire Marshals
- International Association of Arson Investigators
- International Society of Fire Service Instructors
- North American Fire Training Directors
- Congressional Fire Service Institute

CDP and Application Evaluation

The CDP advises FEMA on creating or updating funding priorities and developing criteria for awarding grants. This NOFO reflects the CDP's recommendations regarding priorities, direction, and award criteria.

See subsection 7.F., "Merit Review Process" for a description of the narrative evaluation criteria that peer review panelists use to score each SAFER application.

C. Financial Integrity Criteria
Before making an award, FEMA is required to review the Office of Management and Budget (OMB)-designated databases for applicants' eligibility and financial integrity information. This is required by the Payment Integrity Information Act of 2019 (Pub. L. No. 116-117, § 2 (2020)), 41 U.S.C. § 2313, and the "Do Not Pay Initiative" (31 U.S.C. 3354). For more details, please see 2 C.F.R. § 200.206.

Thus, the Financial Integrity Criteria may include the following risk-based considerations of the applicant:

1. Financial stability.
2. Quality of management systems and ability to meet management standards.
3. History of performance in managing federal award.
4. Reports and findings from audits.
5. Ability to effectively implement statutory, regulatory or other requirements.

D. Supplemental Financial Integrity Criteria and Review
Before making an award expected to exceed the simplified acquisition threshold, defined at 41 U.S.C. § 134,over the POP:

1. FEMA is required by 41 U.S.C. § 2313: to review or consider certain information found in SAM.gov. For details, please see 2 C.F.R. § 200.206(a)(2).
2. An applicant may review and comment on any information in the responsibility/qualification records available in SAM.gov.
3. Before making decisions in the risk review required by 2 C.F.R. § 200.206, FEMA will consider any comments by the applicant.

E. Reviewers and Reviewer Selection
A panel of peer reviewers is comprised of fire service representatives recommended by the CDP. Peer reviewers are subject matter experts recommended by the nine major fire service organizations. In their role as Special Government Employees, peer reviewers must certify and observe Federal Conflict of Interests rules.

F. Merit Review Process
SAFER Program applications are reviewed through a multi-phase process. All applications are electronically pre-scored and ranked based on how well they align with the funding priorities outlined in this NOFO.

Applications with the highest pre-score rankings per activity are then scored competitively by no less than three members of a Peer Review Panel.

Applications will also be evaluated through a series of internal FEMA review processes for completeness, adherence to programmatic guidelines, technical feasibility, costs/quantities, and anticipated effectiveness of the proposed project(s). Below is the process by which applications will be reviewed:

a. ***Pre-Scoring Process***
Applications are electronically pre-scored based on program priorities outlined in Appendix B – Programmatic Information and Priorities as well as responses to activity-specific questions in the online application. Application Narratives are not reviewed during the pre-scoring process. 'Request Details' and 'Budget' information must align with program guidance and statutory funding limitations. The pre-score accounts for 50 % of the total application score under the Hiring Activity and 30 % under the R&R Activity.

b. ***Peer Review Panel Process***
Applications with the highest rankings from the pre-scoring process will undergo a Peer Review Panel process. A panel of peer reviewers is composed of fire service representatives recommended by the CDP. Peer reviewers will assess the merits of each application based on the narrative statement on the requested activity. The evaluation elements listed in the "Narrative Evaluation Criteria" below will be used to calculate the narrative's score for each activity requested. Panelists will independently score each requested activity within the application, discuss the merits and shortcomings of the application with their peers, and document the

findings. A consensus is not required. The panel score is 50 % of the total application score under the Hiring Activity, and 70 % of the total application score under the R&R Activity.

FEMA ranks all complete applications based on how well they align with the program priorities for the specific activity. Responses to the activity-specific questions in the application are used to determine each application's ranking relative to these priorities.

The Narrative Statements in the application must include specific details about the requested activity, including budget information. Peer reviewers evaluate these narrative elements using weighted criteria, as described below, to determine the grant award.

Peer Review Panelists will evaluate and score each activity based on the following narrative elements within each activity.

1. Hiring Activity

The panel score is 50 % of the total application score.

- Project Description (30%):
  - Why does the department need the positions requested in this application?
  - How will the positions requested in this application be used within the department (e.g., fourth firefighter on engine, open a new station, eliminate browned out stations, reduce overtime)?
  - What unique and specific services will the requested positions provide to the fire department and community?
  - How will funds awarded through this grant enhance the department's ability to protect critical infrastructure within the primary response area?

- Impact on Daily Operations (30 %):
  - How are the community and the current firefighters employed by the department at risk without the positions requested in this application?
  - How will that risk be unequivocally reduced if awarded?

- Financial Need (30 %):
  - Provide an income versus expenses breakdown of the department's current annual budget.
  - Describe the department's precise budget shortfalls and inability to address financial needs without federal assistance.
  - Describe what other actions the department has taken to obtain funding elsewhere (e.g., state assistance programs, other grant programs).
  - Discuss how the critical functions of the department are uniquely affected without this funding.

- Cost Benefit (10 %):

- Describe the unique and specific benefits (e.g., quantifying the anticipated savings and efficiencies) the department and community will realize if awarded the positions requested in this application.

2. R&R Activity (Fire Departments)

The panel score is 70 % of the total application score.

- Project Description (30 %):
  - Describe the unique problems and issues the department is experiencing in recruiting new volunteer firefighters.
  - Describe the problems and issues the department is experiencing in retaining current members.
  - Describe the precise implementation plan, including the goals, objectives, methods, specific steps, and timelines to directly address the identified problems or issues.
  - Describe the current marketing plan already in place, or the marketing program to be put in place with or without grant funds.
  - Describe how the program will be uniquely evaluated for its impact on identified recruitment and retention problems and issues. Describe how the overall effectiveness of the grant will be measured.
  - Describe the unique and specific services the new volunteer firefighters, retention of current volunteer firefighters, or both, will provide for the fire department(s) and community.
  - If the grant request will have a regional impact, discuss how the regional partners will benefit and which activities they will benefit from.
  - If the grant request includes executive or management positions, define the purpose of all requested positions and personnel expenditures.

- Impact on Daily Operations (30 %):
  - Clearly describe how the community and current volunteer firefighters in the department are at risk without the items or activities requested in this application.
  - Explain how the awarded funding will directly and effectively reduce the identified risk.
  - Describe the specific impact that recruiting new volunteer firefighters, retaining current volunteer firefighters, or both will have on the department's compliance with NFPA standards.

- Financial Need (30 %):
  - Provide an income versus expenses breakdown of the department's current annual budget.
  - Describe the department's precise budget shortfalls and its inability to address financial needs without federal assistance.
  - Describe what other actions the department has taken to obtain funding elsewhere (e.g., state assistance programs, other grant programs), and how similar projects have been funded in the past.
  - Discuss how the critical functions of the department are uniquely affected without this funding.

- Cost Benefit (10 %):
  - Describe the unique and specific benefits (e.g., quantifying the anticipated savings and efficiencies) the department and community will realize if awarded the items or activities requested in this application.

3. R&R Activity (National, state, local, or federally recognized tribal volunteer firefighters interest organizations)

The panel score is 70 % of the total application score.

- Project Description (30 %):
  - Explain the challenges and issues faced by the fire departments that the organization aims to assist with this grant in recruiting new volunteer firefighters.
  - Describe the problems and issues the same departments are experiencing in retaining current members.
  - Describe the organization's implementation plan, including the goals, objectives, methods, specific steps, and timelines to directly address the problems or issues identified.
  - Describe the current marketing plan already in place, or the marketing program to be put in place with or without grant funds.
  - Explain how the program will be evaluated to measure its impact on the recruitment and retention challenges faced by the fire departments participating in this grant.
  - Describe how the overall effectiveness of the grant will be measured.
  - Describe the specific services the new volunteer firefighters, retention of current volunteer firefighters, or both, will provide for the fire departments participating in this application and their respective communities.
  - Describe the organization's procurement practices and the timelines outlining chronologically the steps to complete the activities requested.

- Impact on Daily Operations (30 %):
  - Describe how the fire departments participating in this application and their current volunteer firefighters and communities are at risk without the items or activities requested in this application.
  - Explain how funding will reduce that risk.
  - Describe the impact that the recruitment of new volunteer firefighters, the retention of current volunteer firefighters, or both, will have on the NFPA compliance of the fire departments participating in this application.

- Financial Need (30 %):
  - Provide an income versus expenses breakdown of the organization's current annual budget.
  - Describe the organization's particular budget shortfalls and the inability to address the financial needs without federal assistance.

- Describe the other actions the organization has taken to obtain funding elsewhere (e.g., state assistance programs, other grant programs), and how similar projects have been funded in the past.
- Discuss how the critical functions of the organization are affected without this funding.

- Cost Benefit (10 %):
  - Describe the specific benefits (e.g., quantifying the anticipated savings and efficiencies) the fire departments participating in this application and their communities will realize if awarded the items or activities requested in this application.

The Narrative Statement blocks do not allow for formatting. Do not type the Narrative Statements using only capital letters. Additionally, do not include tables, special characters, or fonts (e.g., quotation marks, bullets), or graphs. Space for the Narrative Statement is limited. While each element must have a minimum of 200 characters, the maximum number of characters varies based on the questions being asked.

G. Final Selection

a. ***Technical Evaluation Process (TEP)***

The highest-ranking applications from both activities will be considered within the fundable range. Applications that are in the fundable range will undergo both a Technical Review by a subject-matter expert as well as a FEMA Program Office review before being recommended for award. The FEMA Program Office will assess the request with respect to costs, quantities, feasibility, eligibility, and recipient responsibility before recommending any application for award.

During the TEP, information in Appendix B - Programmatic Information and Priorities is used to make final corrections to any request not meeting program eligibility requirements. This is not a scored phase of the application process. Requests may be recommended for partial funding or disqualification based on TEP findings.

8. Award Notices

A. Notice of Award

The Authorized Organization Representative should carefully read the federal award package before accepting the federal award. The federal award package includes instructions on administering the federal award as well as terms and conditions for the award.

By submitting an application, applicants agree to comply with the prerequisites stated in this NOFO and the material terms and conditions of the federal award, should they receive an award.

FEMA will provide the federal award package to the applicant electronically via FEMA GO. Award packages include an Award Letter, Summary Award Memo, Agreement Articles, and Obligating Document. An award package notification email is sent via the grant application system to the submitting AOR.

Recipients must accept their awards no later than 30 days from the award date. Recipients shall notify FEMA of their intent to accept the award and proceed with work via the FEMA GO system.

Funds will be held until the recipient accepts the award via FEMA GO and all other conditions of the award have been satisfied, or until the award is otherwise rescinded. Not accepting a grant award within the specified timeframe may result in a loss of funds. Recipients may request additional time to accept the award if needed.

During the review process for a SAFER Program award, FEMA may have modified the application request(s). These modifications will be identified in the award package provided upon the offer of an award. If the awarded activities, scope of work, or requested dollar amount(s) do not match the application as submitted, the recipient shall only be responsible for completing the activities funded by FEMA. The recipient is under no obligation to start, modify or complete any activities requested but not funded by the award. The award package will identify any differences under the approved scope of work section.

B. Pass-Through Requirements
Standard pass-through requirements in 2 C.F.R. Part 200 apply.

C. Note Regarding Pre-Award Costs
Even if pre-award costs are allowed, beginning performance is at the applicant and/or sub-applicant's own risk.

D. Obligation of Funds
E. The grant funds are obligated in accordance with applicable laws, and no later than upon award. Notification to Unsuccessful Applicants
FEMA GO will provide all applicants who do not receive a FY 2025 SAFER Program award with a turndown notification after September 30, 2026.

9. Post-Award Requirements and Administration

A. Administrative and National Policy Requirements

Presidential Executive Orders

Recipients must comply with the requirements of Presidential Executive Orders related to grants (also known as federal assistance and financial assistance), the full text of which are incorporated by reference.
Pursuant to the preliminary injunction order issued on November 21, 2025, in County of Santa Clara et al. v. Noem, et al., No. 25-cv-08330-WHO (N.D. Cal.), this requirement does not apply to awards or subawards issued to any of the plaintiffs subject to the preliminary injunction order while the order remains in effect. If the preliminary injunction is stayed, vacated, or extinguished, this requirement will immediately become effective. Also, pursuant to the preliminary injunction order issued on November 21, 2025, in City of Chicago et al. v. Noem, et al., No. 25-CV-12765 (N.D. Ill.), this requirement does not apply to awards or subawards issued

to any of the plaintiffs subject to the preliminary injunction order while the order remains in effect. If the preliminary injunction is stayed, vacated, or extinguished, this requirement will immediately become effective.

In accordance with Executive Order 14305, Restoring American Airspace Sovereignty (June 6, 2025), and to the extent allowed by law, eligible state, local, tribal and territorial grant recipients under this NOFO are permitted to purchase unmanned aircraft systems, otherwise known as drones, or equipment or services for the detection, tracking or identification of drones and drone signals, consistent with the legal authorities of state, local, tribal and territorial agencies. Recipients must comply with all applicable federal, state and local laws and regulations, and adhere to any statutory requirements on the use of federal funds for such unmanned aircraft systems, equipment or services.

Subrecipient Monitoring and Management

Pass-through entities must comply with the requirements for subrecipient monitoring and management as set forth in 2 C.F.R. §§ 200.331-333.

B. DHS Standard Terms and Conditions

A recipient under this funding opportunity must comply with the DHS Standard Terms and Conditions in effect as of the date of the federal award, unless a term and condition specifically indicates otherwise. The DHS Standard Terms and Conditions are available online: DHS Standard Terms and Conditions | Homeland Security. For continuation awards, the terms and conditions for the initial federal award will apply unless otherwise specified in the terms and conditions of the continuation award. The specific version of the DHS Standard Terms and Conditions applicable to the federal award will be in the federal award package.

A recipient under this funding opportunity must comply with the FY 2026 Department of Homeland Security Standard Terms and Conditions, with the following exceptions. The term titled "Communication and Cooperation with the Department of Homeland Security and Immigration Officials" and paragraph (2)(a)(ii) of the term titled "Federal Anti-Discrimination Laws Material to the Government's Payment Decisions Under the False Claims Act" do not apply to any federal award under this funding opportunity.

Pursuant to the preliminary injunction order issued on November 21, 2025, in County of Santa Clara et al. v. Noem, et al., No. 25-cv-08330-WHO (N.D. Cal.), the following terms and conditions do not apply to awards or subawards issued to any of the plaintiffs subject to the preliminary injunction order while the order remains in effect: (1) the term titled "Federal Anti-Discrimination Laws Material to the Government's Payment Decisions Under the *False Claims in*Act"; and (2) the term titled "All Executive Orders Related to Grants". If the preliminary injunction is stayed, vacated, or extinguished, both terms and conditions will immediately become effective. As stated above, paragraph (2)(a)(ii) of the term titled "Federal Anti-Discrimination Laws Material to the Government's Payment Decisions Under the *False Claims* Act" of the DHS Standard Terms and Conditions will not apply even if the preliminary injunction is stayed, vacated, or extinguished.

Pursuant to the preliminary injunction order issued on November 21, 2025, in City of Chicago et al. v. Noem, et al., No. 25-CV-12765 (N.D. Ill.), the following terms and conditions do not apply to awards or subawards issued to any of the plaintiffs subject to the preliminary injunction order while the order remains in effect: (1) the term titled "Federal Anti-Discrimination Laws Material to the Government's Payment Decisions Under the *False Claims* Act"; and (2) the term titled "All Executive Orders Related to Grants". If the preliminary injunction is stayed, vacated, or extinguished, both terms and conditions will immediately become effective. As stated above, paragraph (2)(a)(ii) of the term titled "Federal Anti-Discrimination Laws Material to the Government's Payment Decisions Under the *False Claims* Act" of the DHS Standard Terms and Conditions will not apply even if the preliminary injunction is stayed, vacated, or extinguished.

Pursuant to the preliminary injunction order issued on October 31, 2025, in City of Seattle v. Trump, et al., No. 2:25-cv-01435-BJR (W.D. Wa.), the following terms and conditions do not apply to awards or subawards issued to any of the plaintiffs subject to the preliminary injunction order while the order remains in effect: the term titled "Federal Anti-Discrimination Laws Material to the Government's Payment Decisions Under the *False Claims* Act". If the preliminary injunction is stayed, vacated, or extinguished, Paragraph C.XVII will immediately become effective. As stated above, paragraph (2)(a)(ii) of the term titled "Federal Anti-Discrimination Laws Material to the Government's Payment Decisions Under the *False Claims* Act" of the DHS Standard Terms and Conditions will not apply even if the preliminary injunction is stayed, vacated, or extinguished.

C. National Incident Management System (NIMS) Implementation

SAFER Program applicants are not required to comply with NIMS to apply for SAFER Program funding or to receive a SAFER Program award. Any applicant who receives an FY 2025 SAFER Program award must achieve the level of NIMS compliance required by the Authority Having Jurisdiction (AHJ) over the applicant's emergency service operations (e.g., a local government), before the end of the grant's POP. Applicants/subapplicants or recipients/subrecipients are required to certify their compliance with federal statutes, DHS directives, polices, and procedures.

D. Financial Reporting Requirements

1. Recipients must report obligations and expenditures through a federal financial report. The Federal Financial Report (FFR) form, also known as Standard Form 425 (SF-425), is available online at: SF-425 OMB #4040-0014.
2. Recipients must submit the FFR semi-annually throughout the POP as detailed below:
   - No later than July 30 (for the period January 1 – June 30)
   - No later than January 30 (for the period July 1 – December 31)
3. The final FFR is due within 120 days after the end of the POP.

FEMA may withhold future federal awards and cash payments if the recipient does not submit timely financial reports, or the financial reports submitted demonstrate lack of progress or provide insufficient detail.

E. Programmatic Performance Reporting Requirements

1. A Performance Report must be submitted semi-annually throughout the POP. A tutorial is available here: https://www.fema.gov/sites/default/files/documents/FEMA_GO_SF-425_and_PPR_User_Guide_508.pdf.
2. A Performance Report must include:
   - A brief narrative of overall project(s) status;
   - A summary of project expenditures; and
   - A description of any potential issues that may affect project completion.
3. The Performance Report must be submitted through FEMA GO.
4. Performance Report Due Dates
   - No later than July 30 (for the period January. 1 – June 30)
   - No later than January 30 (for the period July 1 – December 31)

F. Closeout Reporting Requirements
Within 120 days after the end of the POP, or after an amendment has been issued to close out a federal award, recipients must submit the following:

1. The final request for payment, if applicable.
2. The final FFR.
3. The final progress report detailing all accomplishments.
4. A qualitative narrative summary of the impact of those accomplishments throughout the POP.
5. Other documents required by this NOFO, terms and conditions of the federal award, or other DHS Component guidance.

After FEMA approves these reports, it will issue a closeout notice. The notice will indicate the POP as closed, list any remaining funds to be de-obligated, and address the record maintenance requirement. Unless a longer period applies, such as due to an audit or litigation, for equipment or real property used beyond the POP, or due to other circumstances outlined in 2 C.F.R. § 200.334, this maintenance requirement is three years from the date of the final FFR.

Administrative Closeout

Administrative closeout is a mechanism for FEMA to unilaterally execute closeout of an award. FEMA will use available award information in lieu of final recipient reports, per 2 C.F.R. § 200.344(h)-(i). It is an activity of last resort, and if FEMA administratively closes an award, this may negatively impact a recipient's ability to obtain future funding.

Additional Reporting Requirements

Anytime there is a change in personnel for any of the awardees, their information needs to be submitted for approval (all the previous personal information identified).

G. Disclosing Information per 2 C.F.R. § 180.335
Before entering into a federal award, the applicant must notify FEMA if it knows that the applicant or any of the principals (as defined at 2 C.F.R. § 180.995) for the federal award:

1. Are presently excluded or disqualified;
2. Have been convicted within the preceding three years of any of the offenses listed in § 180.800(a) or had a civil judgment rendered against you for one of those offenses within that time period;
3. Are presently indicted for or otherwise criminally or civilly charged by a governmental entity (Federal, State, or local) with the commission of any of the offenses listed in § 180.800(a); or
4. Have had one or more public transactions (federal, state or local) terminated within the preceding three years for cause or default.

This is requirement is fully described in 2 C.F.R. §180.335.

Additionally, 2 C.F.R. § 180.350 requires recipients to provide immediate notice to FEMA at any time after entering a federal award if:

1. The recipient learns that either it failed to earlier disclose information as required by 2 C.F.R. § 180.335;
2. Due to changed circumstances, the applicant or any of the principals for the federal award now meet the criteria at 2 C.F.R. § 180.335 listed above.

H. Reporting of Matters Related to Recipient Integrity and Performance
Appendix XII to 2 C.F.R. Part 200 states the terms and conditions for recipient integrity and performance matters used for this funding opportunity.

If the total value of all active federal grants, cooperative agreements, and procurement contracts for a recipient exceeds $10 million at any time during the POP:

1. The recipient must maintain the currency of information reported in SAM.gov about civil, criminal, or administrative proceedings described in paragraph 2 of Appendix XII;
2. The required reporting frequency is described in paragraph 4 of Appendix XII.

I. Single Audit Report
A recipient expending $1 million or more in federal awards (as defined by 2 C.F.R. § 200.1) during its fiscal year must undergo an audit. This may be either a single audit complying with 2 C.F.R. § 200.514 or a program-specific audit complying with 2 C.F.R. §§ 200.501 and 200.507. Audits must follow 2 C.F.R. Part 200, Subpart F, 2 C.F.R. § 200.501, and the U.S. Government Accountability Office (GAO) Generally Accepted Government Auditing Standards.

J. Monitoring and Oversight
Per 2 C.F.R. § 200.337, DHS and its authorized representatives have the right of access to any records of the recipient or subrecipient pertinent to a federal award to perform audits, site visits, and any other official use. The right also includes timely and reasonable access to the recipient's or subrecipient's personnel for the purpose of interview and discussion related to such documents or the federal award in general.

Pursuant to this right and per 2 C.F.R. § 200.329, DHS may conduct desk reviews and make site visits to review and evaluate project accomplishments and management control systems as well

as provide any required technical assistance. Recipients and subrecipients must respond in a timely and accurate manner to DHS requests for information relating to a federal award.

FEMA staff will periodically monitor recipients to ensure compliance with federal regulations and FEMA requirements. This includes reviewing administrative processes, policies, procedures, budgets, and other award criteria. In addition to reviewing semi-annual financial and programmatic reports, FEMA may conduct enhanced monitoring through desk reviews, onsite visits, or both. Enhanced monitoring involves analyzing financial compliance, administrative processes, and program activities to identify areas where recipients may need technical assistance, corrective actions, or other support.

Financial and Programmatic Monitoring

FEMA's monitoring strategy includes both financial and programmatic monitoring to ensure effective grant management, accountability, and transparency. These processes:

- Validate progress toward grant and program goals.
- Safeguard federal funds against fraud, waste and abuse.
- **Financial Monitoring** focuses on compliance with statutory and regulatory requirements for grant administration.
- **Programmatic Monitoring** ensures progress toward project goals, addresses issues hindering success, and confirms compliance with the grant's purpose.

Both processes include initial reviews of all open awards, with additional in-depth monitoring for grants that require extra attention.

Recipient Responsibilities

Recipients are responsible for:

- Accounting for receipts and expenditures.
- Managing cash and maintaining adequate financial records.
- Reporting and refunding disallowed expenditures identified in audits.
- Monitoring subrecipients, if acting as a pass-through entity.

Ensuring compliance with the terms and conditions of the award or subaward, including 2 C.F.R. Part 200.

K. Program Evaluation

Title I of the Foundations for Evidence-Based Policymaking Act of 2018, Pub. L. No. 115-435 (2019) (Evidence Act), PUBL435.PS urges federal agencies to use program evaluation as a critical tool to learn, improve delivery, and elevate program service and delivery across the program lifecycle. Evaluation means "an assessment using systematic data collection and analysis of one or more programs, policies, and organizations intended to assess their effectiveness and efficiency." Evidence Act, § 101 (codified at 5 U.S.C. § 311). OMB A-11, Section 290 (Evaluation and Evidence-Building Activities) further outlines the standards and practices for evaluation activities. Federal agencies are required to specify any requirements for

recipient participation in program evaluation activities (2 C.F.R. § 200.301). Program evaluation activities incorporated from the outset in the NOFO and program design and implementation allow recipients and agencies to meaningfully document and measure progress and achievement toward program goals and objectives, and identify program outcomes and lessons learned, as part of demonstrating recipient performance (2 C.F.R. § 200.301).

As such, recipients and subrecipients are required to participate in a Program Office (PO) or a DHS Component-led evaluation, if selected. This may be carried out by a third-party on behalf of the PO or the DHS Component. Such an evaluation may involve information collections including but not limited to, records of the recipients; surveys, interviews or discussions with individuals who benefit from the federal award, program operating personnel, and award recipients; and site visits or other observation of recipient activities, as specified in a DHS Component or PO-approved evaluation plan. More details about evaluation requirements may be provided in the federal award, if available at that time, or following the award as evaluation requirements are finalized. Evaluation costs incurred during the POP are allowable costs (either as direct or indirect) in accordance with 2 C.F.R. § 200.413.

Recipients and subrecipients are also encouraged, but not required, to participate in any additional evaluations after the POP ends, although any costs incurred to participate in such evaluations are not allowable and may not be charged to the federal award.

L. Additional Performance Reporting Requirements
Not Applicable.

M. Termination of Federal Award

1. The FY 2026 DHS Standard Terms and Conditions sets forth a term and condition entitled "Termination of a Federal Award." The termination provision condition listed below applies to the grant award and the term and condition in the FY 2026 DHS Standard Terms and Conditions does not.

2. Termination of the Federal Award by FEMA
   FEMA may terminate the federal award in whole or in part for one of the following reasons:
   a. If the recipient or subrecipient fails to comply with the terms and conditions of the federal award.
   b. With the consent of the recipient, in which case FEMA and the recipient must agree upon the termination conditions. These conditions include the effective date and, in the case of partial termination, the portion to be terminated.
   c. If the federal award no longer effectuates the program goals or agency priorities. Under this provision, FEMA may terminate the award for these purposes if any of the following reasons apply:

      i. If DHS/FEMA, in its sole discretion, determines that a specific award objective is ineffective at achieving program goals as described in this NOFO;

ii. If DHS/FEMA, in its sole discretion, determines that an objective of the award as described in this NOFO will be ineffective at achieving program goals or agency priorities;
iii. If DHS/FEMA, in its sole discretion, determines that the design of the grant program is flawed relative to program goals or agency priorities;
iv. If DHS/FEMA, in its sole discretion, determines that the grant program is not aligned to either the DHS Strategic Plan, the FEMA Strategic Plan, or successor policies or documents;
v. If DHS/FEMA, in its sole discretion, changes or re-evaluates the goals or priorities of the grant program and determines that the award will be ineffective at achieving the updated program goals or agency priorities; or
vi. For other reasons based on program goals or agency priorities described in the termination notice provided to the recipient pursuant to 2 C.F.R. § 200.341.
vii. If the awardee falls out of compliance with the agency's statutory or regulatory authority, award terms and conditions, or other applicable laws.

d. For convenience, including, but not limited to, when the award no longer advances agency priorities or the national interest

3. Termination of a Subaward by the Pass-Through Entity

The pass-through entity may terminate a subaward in whole or in part for one of the following reasons identified in 2 C.F.R. § 200.340:

a. If the subrecipient fails to comply with the terms and conditions of the federal award.
b. With the consent of the subrecipient, in which case the pass-through entity and the subrecipient must agree upon the termination conditions. These conditions include the effective date and, in the case of partial termination, the portion to be terminated.
c. If the pass-through entity's award has been terminated, the pass-through recipient will terminate its subawards.

4. Termination by the Recipient or Subrecipient
The recipient or subrecipient may terminate the federal award in whole or in part for the following reason identified in 2 C.F.R. § 200.340: Upon sending FEMA or pass-through entity a written notification of the reasons for such termination, the effective date, and, in the case of partial termination, the portion to be terminated. However, if FEMA or the pass-through entity determines that the remaining portion of the federal award will not accomplish the purposes for which the federal award was made, FEMA or the pass-through entity may terminate the federal award in its entirety.

5. Impacts of Termination
a. When FEMA terminates the federal award before the POP ends due to the recipient's material failure to comply with the terms and conditions of the federal award, FEMA will report the termination in SAM.gov in the manner described at 2 C.F.R. § 200.340(c).
b. When the federal award is terminated in part or its entirety, FEMA or the pass-through entity and recipient or subrecipient remain responsible for compliance with the

requirements in 2 C.F.R. §§ 200.344 and 200.345.

6. Notification requirements
FEMA or the pass-through entity must provide written notice of the termination in a manner consistent with 2 C.F.R. § 200.341. The federal award will be terminated on the date of the notification unless stated otherwise in the notification.

7. Opportunities to Object and Appeal
Where applicable, when FEMA terminates the federal award, the written notification of termination will provide the opportunity and describe the process, to object and provide information challenging the action, pursuant to 2 C.F.R. § 200.342.

8. Effects of Suspension and Termination
The allowability of costs to the recipient or subrecipient resulting from financial obligations incurred by the recipient or subrecipient during a suspension or after the termination of a federal award are subject to 2 C.F.R. § 200.343.

M. Best Practices
Although not a requirement in the DHS Standard Terms and Conditions, as a best practice, entities receiving funds through this program should ensure that cybersecurity is integrated into the design, development, operation and maintenance of investments that impact information technology (IT) and/or operational technology (OT) systems. Additionally, "The recipient and subrecipient must … take reasonable cybersecurity and other measures to safeguard information including protected personally identifiable information (PII) and other types of information." 2 C.F.R. § 200.303(e).

N. Payment Information

Recipients will submit payment requests in FEMA GO for FY 2025 awards under this program.

Instructions to Grant Recipients Pursuing Payments

FEMA reviews all grant payments and obligations to ensure allowability in accordance with 2 C.F.R. § 200.305. These measures will ensure funds are disbursed appropriately while continuing to support and prioritize communities who rely on FEMA for assistance. Once a recipient submits a payment request, FEMA will review the request. If FEMA approves a payment, FEMA GO will notify recipients and the payment will be delivered pursuant to the recipients' SAM.gov financial information. If FEMA disapproves a payment, FEMA will inform the recipient.

Processing and Payment Timeline

FEMA must comply with regulations governing payments to grant recipients. See 2 C.F.R. § 200.305. For grant recipients other than states, 2 C.F.R. § 200.305(b)(3) stipulates that FEMA is to make payments on a reimbursement basis within 30 days of receiving the payment request, unless FEMA reasonably believes the request to be improper. For state recipients, 2 C.F.R. § 200.305(a) instructs that federal grant payments are governed by Treasury-State Cash

Management Improvement Act (CMIA) agreements ("Treasury-State agreement") and default procedures codified at 31 C.F.R. part 205 and Treasury Financial Manual (TFM) 4A-2000, "Overall Disbursing Rules for All Federal Agencies." *See* 2 C.F.R. § 200.305(a).

Treasury-State agreements generally apply to "major federal assistance programs" that are governed by 31 C.F.R. part 205, subpart A and are identified in the Treasury-State agreement. 31 C.F.R. §§ 205.2, 205.6. Where a federal assistance (grant) program is not governed by subpart A, payment and funds transfers from FEMA to the state are subject to 31 C.F.R. part 205, subpart B. Subpart B requires FEMA to "limit a funds transfer to a state to the minimum amounts needed by the state and must time the disbursement to be in accord with the actual, immediate cash requirements of the state in carrying out a federal assistance program or project. The timing and amount of funds transfers must be as close as is administratively feasible to a state's actual cash outlay for direct program costs and the proportionate share of any allowable indirect costs." 31 C.F.R. § 205.33(a). Nearly all FEMA grants are not "major federal assistance programs." As a result, payments to states for those grants are subject to the "default" rules of 31 C.F.R. part 205, subpart B.

If additional information is needed, a request for information will be issued by FEMA to the recipient; recipients are strongly encouraged to respond to any additional FEMA request for information inquiries within three business days. If an adequate response is not received, the request may be denied, and the entity may need to submit a new reimbursement request; this will re-start the 30-day timeline.

Submission Process

All non-disaster grant program reimbursement requests must be reviewed and approved by FEMA before drawdowns.

For all non-disaster reimbursement requests (regardless of system), please ensure submittal of the following information:

1. Grant ID / Award Number
2. Total amount requested for drawdown
3. Purpose of drawdown and timeframe covered (must be within the award performance period)
4. Subrecipient Funding Details (if applicable).
    - Is funding provided directly or indirectly to a subrecipient?
        - If **no,** include statement "This grant funding is not being directed to a subrecipient."
    - If **yes**, provide the following details:
        - The name, mission statement, and purpose of each subrecipient receiving funds, along with the amount allocated and the specific role or activity being reimbursed.
        - Whether the subrecipient's work or mission involves supporting aliens, regardless of whether FEMA funds support such activities.
        - Whether the payment request includes an activity involving support to aliens.

- Whether the subrecipient has any diversity, equity, and inclusion practices.[4]

5. Supporting documentation to demonstrate that expenses are allowable, allocable, reasonable, and necessary under 2 C.F.R. Part 200 and in compliance with the grant's NOFO, award terms, and applicable federal regulations.

O. Immigration Conditions
The term titled "Communication and Cooperation with DHS and Immigration Officials" and paragraph (2)(a)(ii) of the term titled "Federal Anti-Discrimination Laws Material to the Government's Payment Decisions Under the *False Claims* Act" in the FY 2026 DHS Standard Terms and Conditions do not apply to any federal award under this funding opportunity.

10. Other Information

A. Period of Performance (POP) Extension
Extensions to the POP are allowed for R&R Activity grants only.

Recipients should consult with their FEMA point of contact for requirements related to a performance period extension.

Extension requests will be granted only due to compelling legal, policy or operational challenges. Extension requests will only be considered for the following reasons:

1. Contractual commitments by the recipient or subrecipient with vendors that prevent completion of the project, including delivery of equipment or services, within the existing POP;
2. The project must undergo a complex environmental review that cannot be completed within the existing POP;
3. Projects are long-term by design, and therefore acceleration would compromise core programmatic goals; or
4. Where other special or extenuating circumstances exist.

Pursuant to the preliminary injunction order issued on November 21, 2025, in County of Santa Clara et al. v. Noem, et al., No. 25-cv-08330-WHO (N.D. Cal.), the DHS Standard Term and Condition titled "Federal Anti-Discrimination Laws Material to the Government's Payment Decisions Under the False Claims Act" does not apply to awards or subawards issued to any of the plaintiffs subject to the preliminary injunction order while the order remains in effect. If the preliminary injunction is stayed, vacated, or extinguished, the term will immediately become effective.

Pursuant to the preliminary injunction order issued on November 21, 2025, in City of Chicago et al. v. Noem, et al., No. 25-CV-12765 (N.D. Ill.), the DHS Standard Term and Condition titled "Federal Anti-Discrimination Laws Material to the Government's Payment Decisions Under the False Claims Act" does not apply to awards or subawards issued to any of the plaintiffs subject to the preliminary injunction order while the order remains in effect. If the preliminary injunction is stayed, vacated, or extinguished, the term will immediately become effective.

Pursuant to the preliminary injunction order issued on October 31, 2025, in City of Seattle v. Trump, et al., No. 2:25-cv-01435-BJR (W.D. Wa.), the DHS Standard Term and Condition titled "Anti-Discrimination" does not apply to awards or subawards issued to any of the plaintiffs subject to the preliminary injunction order while the order remains in effect. If the preliminary injunction is stayed, vacated, or extinguished, the term will immediately become effective.

As stated above, Paragraph(2)(a)(ii) of the DHS Standard Term and Condition titled "Federal Anti-Discrimination Laws Material to the Government's Payment Decisions Under the False Claims Act" will not apply even if any of these preliminary injunctions are stayed, vacated, or extinguished.

Recipients must submit all proposed extension requests to FEMA for review and approval at least 120 days before the end of the POP to allow sufficient processing time. The review process can take up to 30 days or longer. Recipients should factor this review period into the timing of when to submit a request for an extension. Extensions are typically granted for no more than a six-month period.

All extension requests must address the following:

1. The grant program, fiscal year, and award number;
2. The reason for delay – including details of the legal, policy, or operational challenges that prevent final outlay of awarded funds by the deadline;
3. Current status of the activity or activities;
4. Approved POP termination date and new project completion date;
5. Amount of funds drawn down to date;
6. Remaining available funds, both federal and non-federal, if applicable;
7. Budget outlining how remaining federal and non-federal funds will be expended;
8. Plan for completion, including milestones and timeframes for achieving each milestone and the individual responsible for completing the plan;
9. Certification that the activity or activities will be completed within the extended POP without any modification to the original statement of work, as described in the original statement of work and as approved by FEMA.

B. Other Information

a. ***Environmental Planning and Historic Preservation (EHP) Compliance***

FEMA is required to consider effects of its actions on the environment and historic properties to ensure that activities, grants and programs funded by FEMA, comply with federal EHP laws, Executive Orders, regulations and policies.

Recipients and subrecipients proposing projects with the potential to impact the environment or cultural resources, such as the modification or renovation of existing buildings, structures, and facilities, and/or new construction and/or replacement of buildings, structures and facilities, must participate in the FEMA EHP review process. This includes conducting early engagement to help identify EHP resources, such as threatened or endangered species, historic properties, or communities with environmental concerns; submitting a detailed project description with supporting documentation to determine whether the proposed project could impact EHP resources; and identifying mitigation measures and/or alternative courses of action that may lessen impacts to those resources.

FEMA is sometimes required to consult with other regulatory agencies and the public to complete the review process. Federal law requires EHP review to be completed before federal funds are released to carry out proposed projects. FEMA may not be able to fund projects that are not in compliance with applicable EHP laws, Executive Orders, regulations, and policies. FEMA may recommend mitigation measures and/or alternative courses of action to lessen impacts to EHP resources and bring the project into EHP compliance.

EHP guidance is found at Environmental Planning and Historic Preservation. The site contains links to documents identifying agency EHP responsibilities and program requirements, such as

implementation of the National Environmental Policy Act and other EHP laws, regulations and Executive Orders. DHS and FEMA EHP policy is also found in the EHP Directive & Instruction.

All FEMA actions, including grants, must comply with National Flood Insurance Program (NFIP) criteria or any more restrictive federal, state or local floodplain management standards or building code (44 C.F.R. § 9.11(d)(6)). For actions located within or that may affect a floodplain or wetland, the following alternatives must be considered: a) no action; b) alternative locations; and c) alternative actions, including alternative actions that use natural features or nature-based solutions. Where possible, natural features and nature-based solutions shall be used. If not practicable as an alternative on their own, natural features and nature-based solutions may be incorporated into actions as minimization measures.

The GPD EHP screening form is located at https://www.fema.gov/sites/default/files/documents/fema_ehp-screening_form_ff-207-fy-21-100_5-26-2021.pdf.

b. *Procurement Integrity*

When purchasing under a FEMA award, recipients and subrecipients must comply with the federal procurement standards in 2 C.F.R. §§ 200.317-200.327. To help determine whether an action is a procurement or instead a subaward, please consult 2 C.F.R. § 200.331.
For detailed guidance on the federal procurement standards, recipients and subrecipients should refer to various materials issued by FEMA's Procurement Disaster Assistance Team (PDAT). Additional resources, including an upcoming trainings schedule can be found on the PDAT Website: https://www.fema.gov/grants/procurement.

Under 2 C.F.R. § 200.317 when procuring property and services under a federal award, States (including territories) and Indian Tribes, must follow the same policies and procedures they use for procurements from their non-federal funds; additionally, states and Indian Tribes must now follow 2 CFR §200.322, regarding domestic preferences for Procurements and 2 CFR§ 200.327 regarding required contract provisions.

Local government and nonprofit recipients or subrecipients must have and use their own documented procurement procedures that reflect applicable state, local, tribal and territorial (SLTT) laws and regulations, provided that the procurements conform to applicable federal law and the standards identified in 2 C.F.R. Part 200.

1. Important Changes to Procurement Standards in 2 C.F.R. Part 200

On April 22, 2024, OMB updated various parts of Title 2 of the Code of Federal Regulations, among them the procurement standards. These revisions apply to all FEMA awards with a federal award date or disaster declaration date on or after October 1, 2024, unless specified otherwise. The changes include updates to the federal procurement standards, which govern how FEMA award recipients and subrecipients must purchase under a FEMA award.

More information on OMB's revisions to the federal procurement standards can be found in Purchasing Under a FEMA Award: 2024 OMB Revisions Fact Sheet.

2. Competition and Conflicts of Interest

2 CFR §200.319(b) , applicable to local government and nonprofit recipients or subrecipients, requires that contractors that develop or draft specifications, requirements statements of work, or invitations for bids or requests for proposals must be excluded from competing for such procurements. FEMA considers these actions to be an organizational conflict of interest and interprets this restriction as applying to contractors that help a recipient or subrecipient develop its grant application, project plans, or project budget. This prohibition also applies to the use of former employees to manage the grant or carry out a contract when those former employees worked on such activities while they were employees of the recipient or subrecipient.

Under this prohibition, unless the recipient or subrecipient solicits for and awards a contract covering both development and execution of specifications (or similar elements as described above), and this contract was procured in compliance with 2 C.F.R. § § 200.317-200.327, federal funds cannot be used to pay a contractor to carry out the work if that contractor also worked on the development of those specifications. This rule applies to all contracts funded with federal grant funds, including pre-award costs, such as grant writer fees, as well as post- award costs, such as grant management fees.

In addition to organizational conflicts of interest, situations considered to be restrictive of competition include, but are not limited to:

- Placing unreasonable requirements on firms for them to qualify to do business;
- Requiring unnecessary experience and excessive bonding;
- Noncompetitive pricing practices between firms or between affiliated companies;
- Noncompetitive contracts to consultants that are on retainer contracts;
- Specifying only a "brand name" product instead of allowing "an equal" product to be offered and describing the performance or other relevant requirements of the procurement; and
- Any arbitrary action in the procurement process.

Under 2 C.F.R§ 200.318(c)(1) , local government and nonprofit recipients or subrecipients are required to maintain written standards of conduct covering conflicts of interest and governing the actions of their employees engaged in the selection, award, and administration of contracts. **No employee, officer or agent may participate in the selection, award, or administration of a contract supported by a federal award if he or she has a real or apparent conflict of interest. Such conflicts of interest would arise when the employee, officer or agent, any member of his or her immediate family, his or her partner, or an organization that employs or is about to employ any of the parties indicated herein, has a financial or other interest in or a tangible personal benefit from a firm considered for a contract. The officers, employees, and agents of the recipient or subrecipient may neither solicit nor accept gratuities, favors or anything of monetary value from contractors or parties to subcontracts. However, the recipient or subrecipient may set standards for situations in which the financial interest is not substantial, or the gift is an unsolicited item of nominal value. The recipient's or subrecipient's standards of conduct must provide for disciplinary actions to be applied for violations of such standards by officers, employees, or agents.**

Under 2 C.F.R. 200.318(c)(2), if the local government and nonprofit recipient or subrecipient has a parent, affiliate, or subsidiary organization that is not a SLTT government, the recipient or subrecipient must also maintain written standards of conduct covering organizational conflicts of interest. Organizational conflict of interest means that because of a relationship with a parent company, affiliate, or subsidiary organization, the recipient or subrecipient is unable or appears to be unable to be impartial in conducting a procurement action involving a related organization. The recipient or subrecipient must disclose in writing any potential conflicts of interest to FEMA or the pass-through entity in accordance with applicable FEMA policy.

3. Supply Schedules and Purchasing Programs

Generally, a recipient or subrecipient may seek to procure goods or services from a federal supply schedule, state supply schedule, or group purchasing agreement.

Information about GSA programs for states, Indian Tribes, and local governments, and their instrumentalities, can be found at Purchasing Resources and Support for State and Local Governments.pdf

4. Procurement Documentation

Per 2 C.F.R. § 200.318(i), local government and nonprofit recipients or subrecipients are required to maintain and retain records sufficient to detail the history of procurement covering at least the rationale for the procurement method, selection of contract type, contractor selection or rejection, and the basis for the contract price. States and Indian Tribes are reminded that in order for any cost to be allowable, it must be adequately documented per 2 CFR §200.403(g).

Examples of the types of documents that would cover this information include but are not limited to:

- Solicitation documentation, such as requests for quotes, invitations for bids, or requests for proposals;
- Responses to solicitations, such as quotes, bids, or proposals;
- Pre-solicitation independent cost estimates and post-solicitation cost/price analyses on file for review by federal personnel, if applicable;
- Contract documents and amendments, including required contract provisions; and
- Other documents required by federal regulations applicable at the time a grant is awarded to a recipient.

c. *Financial Assistance Programs for Infrastructure*

1. Recipients and subrecipients must comply with FEMA's implementation requirements of the Build America, Buy America Act (BABAA), which was enacted as part of the Infrastructure Investment and Jobs Act §§ 70901-70927, Pub. L. No. 117-58 (2021); and Executive Order 14005, Ensuring the Future is Made in All of America by All of America's Workers. See also 2 C.F.R. Part 184, Buy America Preferences for Infrastructure Projects and Office of Management and Budget (OMB), Memorandum M-24-02, Implementation Guidance on Application of Buy America Preference in Federal Financial Assistance Programs for Infrastructure.

None of the funds provided under this program may be used for a project for infrastructure unless the iron and steel, manufactured products, and construction materials used in that infrastructure are produced in the United States.

The Buy America preference only applies to articles, materials, and supplies that are consumed in, incorporated into, or affixed to an infrastructure project. As such, it does not apply to tools, equipment, and supplies, such as temporary scaffolding, brought to the construction site and removed at or before the completion of the infrastructure project. Nor does a Buy America preference apply to equipment and furnishings, such as movable chairs, desks, and portable computer equipment, that are used at or within the finished infrastructure project but are not an integral part of the structure or permanently affixed to the infrastructure project.

To see whether a particular FEMA federal financial assistance program is considered an infrastructure program and thus required to implement FEMA's Build America, Buy America requirements, please see Programs and Definitions: Build America, Buy America Act | FEMA.gov

2. Waivers

When necessary, recipients (and subrecipients through their pass-through entity) may apply for, and FEMA may grant, a waiver from these requirements.

A waiver of the domestic content procurement preference may be granted by the agency awarding official if FEMA determines that:

- Applying the domestic content procurement preference would be inconsistent with the public interest, or
- The types of iron, steel, manufactured products, or construction materials are not produced in the United States in sufficient and reasonably available quantities or of a satisfactory quality, or
- The inclusion of iron, steel, manufactured products, or construction materials produced in the United States will increase the cost of the overall project by more than 25%.

The process for requesting a waiver from the Buy America preference requirements can be found on FEMA's website at: "Buy America" Preference in FEMA Financial Assistance Programs for Infrastructure | FEMA.gov.

3. Definitions

For definitions of the key terms of the Build America, Buy America Act, please visit Programs and Definitions: Build America, Buy America Act | FEMA.gov.

a. ***Mandatory Disclosures***
The non-Federal entity or applicant for a federal award must disclose, in a timely manner, in writing to the federal awarding agency or pass-through entity all violations of federal criminal law involving fraud, bribery or gratuity violations potentially affecting the federal award, 2 CFR § 200.113 .

b. ***Adaptive Support***
Pursuant to Section 504, of the Rehabilitation Act of 1973 , recipients of FEMA financial assistance must ensure that their programs and activities do not discriminate against qualified individuals with disabilities.

c. ***Record Retention***
1. Record Retention Period

Financial records, supporting documents, statistical records, and all other non-federal entity records pertinent to a federal award generally must be maintained for at least three years from the date the final FFR is submitted. *See* 2 C.F.R. §200.334. Further, if the recipient does not submit a final FFR and the award is administratively closed, FEMA uses the date of administrative closeout as the start of the general record retention period.

The record retention period **may be longer than three years or have a different start date** in certain cases.

2. Types of Records to Retain

FEMA requires that recipients and subrecipients maintain the following documentation for federally funded purchases:

- Specifications
- Solicitations
- Competitive quotes or proposals
- Basis for selection decisions
- Purchase orders
- Contracts
- Invoices
- Canceled checks

d. ***Actions to Address Noncompliance***
Non-federal entities receiving financial assistance funding from FEMA are required to comply with requirements in the terms and conditions of their awards or subawards, including the terms set forth in applicable federal statutes, regulations, NOFOs and policies. Throughout the award lifecycle or even after an award has been closed, FEMA or the pass-through entity may discover potential or actual noncompliance on the part of a recipient or subrecipient.

In the case of any potential or actual noncompliance, FEMA may place special conditions on an award per 2 C.F.R.§ 200.208 and 2 C.F.R.§ 200.339. FEMA may place a hold on funds until the matter is corrected, or additional information is provided per 2 C.F.R.§ 200.339. or it may do both. Similar remedies for noncompliance with certain federal civil rights laws are authorized pursuant to 44 C.F.R. Part 7 and 44 C.F.R. Part 19 or other applicable regulations.
If the noncompliance is not able to be corrected by imposing additional conditions or the recipient or subrecipient refuses to correct the matter, FEMA may take other remedies allowed under 2 C.F.R.§ 200.339.

e. ***Audits***

FEMA grant recipients are subject to audit oversight from multiple entities including the DHS Office of the Inspector General (OIG), the Government Accountability Office (GAO), the pass-through entity, or independent auditing firms for single audits, and may cover activities and costs incurred under the award. Auditing agencies such as the DHS OIG, the GAO, and the pass-through entity (if applicable), and FEMA in its oversight capacity, must have access to records pertaining to the FEMA award.

11. Appendix A – FY 2025 SAFER Program Updates

Appendix A contains a brief list of changes between FY 2024 and FY 2025 to the SAFER Program. The FY 2025 SAFER Program NOFO contains some changes to definitions, descriptions, and priority categories. Changes include:

- Under Definitions
  - Clarification regarding roles and responsibilities for Grant Administrators, Program Managers and R&R Coordinators.
  - Clarification regarding Explorer, Cadet, or Mentoring Programs.
- R&R Activity – Eligible Costs: Medium Priority
  - Training supplies and nominal stipends are now eligible costs to support an explorer, cadet, or mentoring program.
  - Medium Priority wellness program costs are not eligible unless paired with a request for a High Priority Wellness and Fitness cost (e.g. physicals). Eligible Medium Priority wellness program costs are now limited to those described in the R&R Activity – Eligible Costs: Medium Priority table.
- Excess funds restrictions have been updated.

12. Appendix B – Programmatic Information and Priorities

Appendix B contains details on SAFER Program information and priorities. Reviewing this information may help applicants make their application(s) more competitive.

A. Ineligible Applications and Organizations
Volunteer and combination fire departments may apply for both the Hiring Activity and the R&R Activity, but they must submit separate applications for each. Applicants are limited to one application per activity per application period. If an applicant submits more than one application for the same activity during a single period, FEMA will disqualify both applications.

If two or more of the following entities have separate funding streams, personnel rosters, and EINs but share the same facilities, FEMA considers them separate organizations for FY 2025 SAFER Program eligibility:

- Fire departments
- National, state, local, federally recognized Tribal Nation, and nonprofit interest organizations

However, if two or more organizations sharing facilities apply for the same activity (e.g., Hiring of Firefighters), FEMA may review and compare their applications to determine eligibility and avoid duplicating benefits.

Federal employees are prohibited from participating in any capacity (paid or unpaid) in the development of applications submitted under this program.

Examples of Ineligible Applications and Organizations

The following are ineligible to apply:

- For-profit organizations, federal agencies, and individuals
- Fire departments that are federal entities or contracted by the federal government and solely responsible for fire suppression on federal installations or land
- Fire departments that are not independent entities but are part of, controlled by, or under the operational command of a larger department, agency, or Authority Having Jurisdiction (AHJ)
    - **Exception:** If a fire department is part of the same legal entity as a municipality or other government organization and meets eligibility criteria, the municipality or organization may apply on behalf of the fire department. The application must clearly state that the fire department is part of the same legal entity.
- State or local agencies, subsets of governmental entities, or authorities that do not meet the requirements defined by 15 U.S.C. § 2229a(a)(1)(A) and (a)(2).
- Ambulance services, emergency medical service organizations, rescue squads, auxiliaries, dive teams, and urban search and rescue teams.
- Non-federal airport or port authority fire departments whose sole responsibility is fire suppression on airport grounds or port facilities, unless they have a formally recognized agreement to provide fire suppression on a first-due basis outside the airport or port.

Duplicate Applications
If an applicant submits two or more applications for the same activity, both may be disqualified.

Exception for Multi-Agency Applications

An entity applying on behalf of other organizations (e.g., multiple fire departments under the same county, city, borough, parish, or municipality) may request similar or identical costs. The application must clearly state which costs (including quantities) are for each agency or organization.

B. Supporting Definitions for this NOFO
Attrition is a gradual reduction in work force without laying off personnel, e.g., when workers resign or retire and are not replaced.

Authority Having Jurisdiction (AHJ) is that person or office charged with enforcing the NFPA codes (Per NFPA101-2024 Edition: Life Safety Code).

Automatic Aid is a plan developed between two or more fire departments for immediate joint response on first alarms (Per NFPA 1710 – 2020 edition and NFPA 1720 – 2020).

Benefits, as defined in 2 C.F.R. § 200.431, means the regular compensation paid to employees during periods of authorized absences from the job, e.g., vacation leave, sick leave, military leave. Benefits may include employer contributions or expenses for social security, employee insurance, workmen's compensation, and pension plan costs, and the like, whether treated as indirect costs or as direct costs, and are also eligible and shall be distributed to awards and other activities in a manner consistent with the pattern of benefits accruing to the individuals or group of employees whose salaries and wages are chargeable.

Career Fire Department, as defined in 15 U.S.C. § 2229, means a fire department that has an all-paid force of firefighting personnel other than paid-on-call firefighters.

Combination Fire Department, as defined in 15 U.S.C. § 2229, means a fire department that has paid firefighting personnel and volunteer firefighting personnel. FEMA considers a fire department with firefighting personnel paid a stipend, regardless of the amount, on a per event basis, or paid on- call, to be a combination fire department. This includes non-fire emergency medical service personnel of the department.

Emergency Medical Services Organization is a public or private organization that provides direct emergency medical services, including medical transport, and are not eligible for SAFER grant funding.

Explorer, Cadet or Mentoring Program, also known as a junior firefighter program, is a program conducted by a fire department to introduce youths between the ages of 15 and 18 to the fire service. Such programs teach basic firefighting skills, provide opportunities for mentorship by adult career and volunteer firefighters, and encourage future participation in the fire service. An explorer, cadet or mentoring program is a valuable volunteer firefighter recruitment tool because it grows the local population of individuals with basic firefighter training and interest in supporting their local fire department. Programs must be conducted in accordance with state and federal labor law and explorers, cadets, or junior firefighters should not engage in fireground/scene operations other than providing support or auxiliary work outside the operational area.

Fire Department is an agency or organization that has a formally recognized arrangement with a state, territory, local government, or Tribal Nation authority (city, county, parish, fire district, township, town, village or other governing body) to provide fire suppression on a first-due basis to a fixed geographical area. Fire departments may be comprised of members who are volunteer, career, or a combination of volunteer and career.

Firefighter is an individual having the legal authority and responsibility to engage in fire suppression; employed by a fire department of a municipality, county, fire district, or state, engaged in the prevention, control and extinguishing of fires; and responding to emergency situations in which life, property or the environment is at risk. This individual must be trained in fire suppression, but may also be trained in emergency medical care, hazardous materials awareness, rescue techniques, and any other related duties provided by the fire department.

Grant Administrator is an individual who is responsible for managing the financial and administrative aspects of grants supporting R&R projects or programs designed to benefit combination or majority volunteer fire departments. This role ensures compliance with grant terms, oversees budgeting and reporting, and facilitates the effective use of grant funds to achieve program objectives. The Grant Administrator serves as the liaison between the funding agency, program staff, and fire departments to ensure transparency and accountability.

Initial Full Alarm Assignment is the personnel, equipment, and resources ordinarily dispatched upon notification of a structural fire.

Majority Career departments are considered majority career if more than 50 % of the active firefighting membership is salaried staff.

Majority Volunteer departments are considered majority volunteer if more than 50 % of the active firefighting membership is NOT compensated for service other than a nominal stipend and insurance.

Mutual Aid is a written intergovernmental agreement between agencies or jurisdictions stating that they will assist one another on request by furnishing personnel, equipment or expertise in a specified manner (NFPA 1710 Standard for the Organization and Deployment of Fire Suppression Operations, Emergency Medical Operations, and Special Operations to the Public by Career Fire Departments, 2020 edition; and NFPA 1720 Standard for the Organization and Deployment of Fire Suppression Operations, Emergency Medical Operations, and Special Operations to the Public by Volunteer Fire Departments, 2020 Edition).

National, State, Local or Federally Recognized Tribal Organizations that Represent the Interests of Volunteer Firefighters are organizations that support or represent the interests of firefighters in front of legislative bodies at the local, state, tribal or federal level. Such organizations include, but are not limited to, state or local firefighter or fire chiefs' associations, and volunteer firefighter relief organizations and associations. FEMA shall make the final determination as to whether an applicant is an appropriate volunteer firefighter interest group. The District of Columbia, the Commonwealth of the Northern Mariana Islands, the U.S. Virgin Islands, Guam, American Samoa, and the Commonwealth of Puerto Rico are all defined as "States" in the Federal Fire Prevention and Control Act of 1974. See 15 U.S.C. § 2203(10).

New Recruit is a volunteer that joins the department with the intent to serve as a firefighter, after the recipient is notified of the grant award (the date of the award notification email in FEMA GO).

Nominal Stipend is a stipend that does not exceed 20 % of what the fire department would otherwise pay to hire a full-time firefighter to perform the services for which the stipend is provided.

Whether a stipend falls above or below the 20 % threshold may be determined in one of two ways. Departments that maintain paid full-time firefighters on their payrolls may compare the

stipend to the salary they pay a full-time firefighter who performs similar services to determine whether the stipend is more or less than 20 % of that salary.

Departments that do not maintain full time firefighters on their payrolls may make the determination based on a comparison to the salary paid to a full-time firefighter in a neighboring jurisdiction, elsewhere in the state or ultimately the nation, and may also utilize data from the U.S. Department of Labor's Bureau of Labor Statistics. A nominal stipend may also include reimbursements to volunteer firefighters for approximate out-of- pocket expenses they incur.

If a stipend paid exceeds 20 % of the prevailing wage calculated as described above, then the firefighter receiving compensation would not qualify as a volunteer and is considered an employee who may be covered by the *Fair Labor Standards Act (FLSA)* minimum wage and overtime provisions.

Operational Budget is the funding supporting fire-related programs or emergency response activities (e.g., salaries, maintenance, equipment, apparatus).

Operational Position is a position with a primary assignment (more than 50 % of time) on a fire suppression vehicle, regardless of collateral duties, in support of the department's NFPA 1710 or NFPA 1720 compliance.

Paid-on-Call is defined as firefighters who are paid a stipend for each event to which they respond. Paid-on-call firefighters may be considered paid firefighters or volunteer firefighters, depending on whether the stipend they receive is a nominal stipend. For the purposes of this SAFER Program, a department whose membership is composed of all volunteer firefighters, including any paid-on-call firefighters who receive only a nominal stipend, will be considered a volunteer fire department. Also, for the purposes of this SAFER Program, a department composed of any paid-on-call firefighters who receive more than a nominal stipend will be considered a combination fire department. Also refer to the definition of a nominal stipend.

Part-Time Firefighter is a firefighter who works less than 40 hours per week. When more than one part-time firefighter shares a position that results in work in excess of 40 hours per week, FEMA considers that shared assignment to be a Full-Time Equivalent position that must be accounted for in the staffing information provided in the application.

Primary First Due is a geographic area surrounding a fire station in which a company from that station is projected to be first to arrive on the scene of an incident.

Program Manager is an individual who oversees the planning, execution and evaluation of R&R projects or programs designed to benefit combination and majority volunteer fire departments. This role ensures that all program activities align with organizational goals, comply with funding requirements, and achieve measurable outcomes. The Program Manager acts as a central point of coordination, managing resources, timelines, and stakeholder relationships to ensure program success.

R&R Coordinator is an individual who is responsible for developing, implementing and managing strategies to recruit and retain volunteer firefighters within combination and majority volunteer fire departments. This role focuses on outreach, engagement, and support initiatives to ensure the sustainability of volunteer staffing levels. Key responsibilities include organizing recruitment campaigns, conducting retention-focused activities, addressing barriers to volunteer participation, and fostering a positive environment within the fire department.

Salary is a fixed payment made by an employer to an employee to compensate for a regular work schedule. Typically, the payment is made monthly, biweekly or weekly, but often expressed as an annual sum. The salary structure should be documented in writing by the employer. Note: Only costs for overtime that an employer routinely pays as a part of a firefighter's regularly scheduled and contracted shift hours to comply with FLSA are eligible salary costs under the Hiring Activity.

State, as defined in 6 U.S.C. § 101(17), is defined as any of the 50 states, the District of Columbia, Puerto Rico, the U.S. Virgin Islands, Guam, American Samoa, and the Commonwealth of the Northern Mariana Islands.

Staffing and Deployment is the minimum staffing requirements to ensure enough members are available to operate safely and effectively as defined in NFPA 1710 and 1720.

Supplanting is to replace or take place of funds that would otherwise be available from state or local sources, or the Bureau of Indian Affairs.

Tuition Assistance is only eligible for reimbursement of undergraduate and graduate studies, vocational/technical training, certification, and job training programs for the member of the department and not a spouse nor a dependent.

Volunteer Fire Department, as defined in 15 U.S.C. § 2229, means a fire department that has an all-volunteer force of firefighting personnel.

C. Application Tips

The following information may be useful when preparing a competitive application:

- NFPA – "FREE ACCESS": As part of its commitment to enhancing public safety and supporting the emergency responder, the NFPA makes its codes and standards available online for free. Please visit http://www.nfpa.org/freeaccess.
- For the most competitive applications, select those local need(s) that most closely align with one or more SAFER Program funding priorities.
- Applications differ based on the applicant type. For example, the Hiring Activity application will be different from the fire department application for the R&R Activity; the R&R application will be different for a fire department than an interest organization. Be sure to select the appropriate applicant type when applying.
- When filling out the online application, applicants are required to provide basic demographic information regarding their organization and the community served and

must provide detailed information regarding the items or activities for which they are seeking funding.
- If awarded, the application request(s) may be modified during the award review process; if the awarded activities, Scope of Work, or amount(s) do not match the application as submitted, the grant recipient shall only be responsible for completing the activities funded. The grant recipient is under no obligation to start, modify or complete any activities requested, but not funded by this award. Please review the Award Package.

D. Funding Limitation

Specific funding parameters are either required by law or are the outcome of recommendations from the CDP. Each requirement is identified below, followed by the source of the requirement noted in parentheses:

- A total of 10 % of the funding appropriated for FY 2025 SAFER Program awards is set aside for the recruitment and retention of volunteer firefighters (15 U.S.C. § 2229a(a)(2)).
  - No more than 33 % of the total amount allocated for the recruitment and retention of volunteers can be awarded to national, state, local, territorial, or federally recognized tribal organizations that represent the interests of volunteer firefighters (CDP).
- A total of 10 % of funding appropriated for FY 2025 SAFER Program awards is set aside for grants awarded to all volunteer or majority volunteer departments for hiring of firefighters (15 U.S.C. § 2229a(a)(1)(H)).
  - A majority volunteer fire department is one that more than half its personnel do not receive financial compensation for their services, other than life, health and worker's compensation insurance, or a nominal stipend payment, including certain paid-on-call personnel. Although applications are normally awarded based on total score (high to low), to meet this 10% statutory set aside, the SAFER Program Office may be required to fund an application that meets the criteria for the set aside instead of a higher-scoring application that does not meet the set aside criteria (15 U.S.C. § 2229a(a)(1)(H)).
  - If FEMA awards less than 10 % of the funds available for the hiring of firefighters to volunteer and majority volunteer fire departments, it must transfer the remaining funds to provide grants for the recruitment and retention of volunteer firefighters (15 U.S.C. § 2229a(a)(1)(H)).

E. Funding Priorities

a. ***Meeting the National Standards***

FEMA prioritizes bringing non-compliant (NFPA 1710 or 1720) departments into compliance in the most cost-effective manner.

FEMA will ask applicants general questions about the NFPA standard they are attempting to meet as well as their current ability to meet that standard (without the use of overtime).

FEMA will also ask applicants to indicate what their ability will be to meet that same standard if awarded grant funds. Having additional firefighters on staff should improve a local fire

department's ability to comply with the staffing, response and operational standards that enhance community and firefighter safety.

Applications resulting in the largest percentage increases in compliance with the relevant section of NFPA 1710 (for career departments) or 1720 (for volunteer departments) receive higher pre-scores than applications resulting in smaller percentage increases in compliance.

Note: SAFER Program grants focus only on the Deployment, or Staffing and Deployment sections of these two standards, respectively.

- NFPA 1710 Assembly Requirements – Standard for the Organization and Deployment of Fire Suppression Operations, Emergency Medical Operations, and Special Operations to the Public by Career Fire Department (Section 5.2.4.1 – Single-Family Dwelling Initial Full Alarm Assignment Capability, Section 5.2.3.1 – Engine Companies, 3.3.53 Rapid Intervention Crew). This standard applies primarily to career fire departments and combination departments if the combination department chooses it.

- NFPA 1720 Assembly Requirements – Standard for the Organization and Deployment of Fire Suppression Operations, Emergency Medical Operations, and Special Operations to the Public by Volunteer Fire Departments (Section 4.3 – Staffing and Deployment, Section 4.6 Initial Firefighting Operations). This standard applies primarily to all-volunteer fire departments, but it may also apply to combination departments if the combination department does not choose to comply with the NFPA 1710 standard.

F. Hiring Activity Overview

Hiring Activity grants help volunteer, combination and career fire departments improve or restore staffing levels for better emergency response and safer incident scenes. FEMA provides these grants directly to fire departments, offering financial support to hire new firefighters **("New Hires")** and expand their frontline workforce.

All the following are considerations in prescoring and peer review determinations: High (H), Medium (M), Low (L)

a. ***Compliance with NFPA Standards***

The tables below identify the priority levels for current and new compliance with the NFPA 1710/1720 standards discussed in Appendix B Section E. Funding Priorities of this NOFO.

Current (Pre-Award) 1710/1720 Compliance Priorities	
H Never or 0%	**M** Half of the time or 40-59%
H Rarely or 1-19%	**L** Very often or 60-79%
M Sometimes or 20-39%	**L** Most of the time or 80-100%

New (Post-Award) 1710/1720 Compliance Priorities

H Always or 91-100%	**M** Half of the time or 40-59%
H Most of the time or 80-90%	**L** Sometimes or 20-39%
M Very often or 60-79%	**L** Rarely or 0-19%

b. ***Call Volume and Population Served***
Department call volume and population served are both factors in the initial application evaluation. Departments responding to a higher number of incidents and departments that protect a larger jurisdiction will receive higher consideration than those departments responding to fewer incidents and protecting smaller jurisdictions.

c. ***Firefighter Health Measures***
The health and well-being of firefighters is of paramount importance. Therefore, applicants who indicate they will provide newly hired firefighters with an entry-level physical and receive immunizations and who indicate they will provide annual medical exams receive higher consideration than applicants who do not specify that these benefits will be provided. To qualify for this higher consideration, the physicals must be consistent with those required under NFPA 1580 Chapter 13, Occupational Medical: Evaluations (NFPA 1582).

Entry-Level Medical Exams	
H NFPA 1582-compliant physicals	**M** Non-NFPA 1582-compliant physicals

Annual Medical Exams	
H NFPA 1582-compliant physicals	**M** Non-NFPA 1582-compliant physicals

d. ***Training Requirements***
Applicants receive higher pre-scores if the personnel funded under the grant will meet the minimum Emergency Medical Services (EMS) training and certification requirements prescribed by the AHJ.

G. R&R Activity – Fire Departments Overview
R&R Activity grants help fire departments recruit and keep volunteer firefighters trained in firefighting and emergency response. These increase the number of skilled, certified, and capable firefighters who can safely respond to emergencies in the department's service area.

The following are considerations in prescoring and peer review determinations. Program priorities are listed as: **High (H), Medium (M), Low (L)**

a. ***Compliance with NFPA Standards***
The highest priority is to assist departments experiencing a high rate of turnover and that have staffing levels significantly below the ideal staffing level required to comply with NFPA standards 1710 or 1720 as discussed in Appendix B – Programmatic Information and Priorities, Funding Priorities of this NOFO.

b. ***Volunteer Membership***

Departments or organizations with the highest percentage of volunteers are prioritized for recruitment and retention support. Applicants with mostly volunteer members or a large number of volunteer firefighters will receive greater consideration.

Percentage of Volunteer Firefighters	
H 91-100%	M 41-50%
H 81-91%	M 31-40%
H 71-80%	L 21-30%
H 61-70%	L 11-20%
M 51-60%	L 1-10%

c. ***Call Volume***
Department call volume is a factor in the initial evaluation. Departments responding to a higher number of incidents receive higher consideration.

d. ***Firefighter Health Measures***
Applicants who commit to providing newly recruited firefighters with an entry-level physical, immunizations, and annual medical exams will receive higher consideration. These physicals must meet the standards outlined in NFPA 1582, Chapter 13: Occupational Medical Evaluations.

Additionally, applicants who offer worker's compensation or Accidental Death & Dismemberment (AD&D) benefits to their members will receive higher consideration compared to those who do not specify these benefits.

Entry-Level Medical Exams	
H NFPA 1582-compliant physicals	M Non-NFPA 1582-compliant physicals

Annual Medical Exams	
H NFPA 1582-compliant physicals	M Non-NFPA 1582-compliant physicals

e. ***Firefighter Training and Certification Requirements***

Firefighter	
H Both Firefighter (FF) II/Emergency Medical Technician (EMT)	M FF I
H FF II	L First Responder
M Both FF I/EMT	

f. ***R&R Coordinator/Program Manager/Grant Administrator***

R&R Coordinator
H Applicants who currently have an R&R coordinator, program manager, or grant administrator in place
M Applicants who request grant funding for an R&R coordinator, program manager, or grant administrator's position

L Applicants who do not have, or are not requesting, an R&R coordinator, program manager, or grant administrator

g. *Regional Requests*

Applications that will have a direct regional or local benefit beyond the immediate boundaries of the applicant's first-due area will receive higher consideration.

A regional request is an opportunity for an eligible R&R Activity organization to act as a host and apply for funding on behalf of itself and any number of other participating R&R Activity eligible organizations. Regional activities should achieve cost effectiveness, support regional efficiency and resilience, and have a direct regional or local benefit to more than one local jurisdiction (county, parish, town, township, city, or village). Direct regional or local benefit means that other eligible organizations will receive a portion of the grant-awarded funds, and will receive and/or share items purchased with those funds

The community identification characteristic, the organizational status of the applicant, and the permanent resident population should be entered for the host entity, regardless of the composition of the participating partners.

Regional populations served are the aggregate of the geographically fixed areas of the host and participating partner organizations.

Neither the regional host nor any participating partner is prevented from also applying on behalf of their own organization for SAFER funding. However, the regional host or participating partner must not apply for a project or activity that conflicts with or duplicates another project or activity that the host or participating partner already benefits from, or will benefit from if awarded. Applicants must certify that the organizations participating in the application have not received grants for similar items, activities or projects.

In completing the application, the host applicant must include a list of all participating organizations, including a point of contact and phone number for each organization that will directly benefit from the regional project if they receive the grant.

To apply for a regional project, the host organization must agree, if awarded, to be responsible for all aspects of the grant. This includes, but is not limited to, cost share, accountability for the assets, and all reporting requirements in the regional application.

All participants of a regional application must comply with SAFER Program requirements. Upon notification by the SAFER Program Office, the host agency shall not distribute grant-funded assets or provide grant-funded contractual services to non-compliant partner organizations. The host and the delinquent partners will be notified by the SAFER Program Office of their specific non-compliance.

Regional host applicants and participating partner agencies must execute a Memorandum of Understanding (MOU), or equivalent document signed by the host and all participating organizations participating in the award. The MOU must specify the individual and mutual

responsibilities of the host and participating partners, the host's and participants' level of involvement in the project(s), the participating partners' EINs, and the proposed distribution of all grant-funded assets or contracted services. Any entity named in the application as benefiting from the award must be an eligible SAFER Program organization and must be a party to the MOU or equivalent document. **Copies of the MOU or equivalent document must be submitted as an attachment in the application**.

H. R&R Activity – National, State, Local, Territorial, or Federally Recognized Tribal Nation Volunteer Firefighter Interest Organizations (Interest Organizations) Overview

Grants awarded under this R&R Activity are to applicants who identify as an Interest Organization. These grants are intended to create an aggregate increase in the number of trained, certified, and competent firefighters capable of safely responding to emergencies on behalf of the fire departments being represented. For this reason, projects that are comprehensive in nature and based on a clear needs assessment, implementation plan, evaluation plan, and have, or will establish, fire service partnerships will receive higher consideration.

In completing the application, the applicant must include data that approximates the characteristics of the entire region and all fire departments affected by the grant. If awarded, recipients may be required to provide documentation of each fire department's consent to participate in the application. Applicants must also certify that they will ensure the fire departments participating in this application have not received grants for similar items/activities. The following identifies the elements that the applications will be evaluated on during the pre-scoring process. Automated (pre-score) evaluation scores represent 30 % of the total application score.

All the following are considerations in pre-scoring and peer review determinations. Program priorities are listed as: **High (H), Medium (M), Low (L)**

a. ***Compliance with NFPA Standards***

The highest priority is to assist departments experiencing a high rate of turnover that have staffing levels significantly below the ideal staffing level required to comply with NFPA standards 1710 or 1720 as discussed in Appendix B – Programmatic Information and Priorities, Funding Priorities of this NOFO. Interest Organizations that currently have the lowest recruitment and retention rates among the entire region and all fire departments benefitting from the grant funds receive higher consideration for funding.

b. ***R&R Coordinator/Program Manager/Grant Administrator***

R&R Coordinator
H Applicants who currently have a coordinator, program manager, or grant administrator in place
M Applicants who request grant funding for a coordinator, program manager, or grant administrator's position
L Applicants who do not have, nor are not requesting, a coordinator, program manager, or grant administrator

c. ***Needs Assessment***

Needs Assessment	
H Applicants with projects based on a needs assessment	L Applicants with projects that are not based on a needs assessment

d. ***Fire Service Partnerships***

Fire Service Partnerships	
H Applicants who have, or will establish, fire service partnerships as part of this project	L Applicants who will not have, nor establish, fire service partnerships as part of this project

I. Eligible and Ineligible Costs and Requirements

Regardless of the eligibility of any costs requested or the results of the review of the application conducted in accordance with Section 7 Application Review Information of this NOFO, FEMA reserves the right to approve the activities requested in an application in whole or in part.

Hiring Activity – Eligible Costs and Requirements

Eligible Costs:

- Salary and associated benefits (actual payroll expenses) for the positions funded under the SAFER Program grant are eligible. Costs are reimbursable if they are included as part of the standard package, available to all operational firefighter positions, contractually obligated, and reimbursed via payroll. Refer also to the definitions in Appendix B – Programmatic Information and Priorities, Supporting Definitions for this NOFO or this NOFO.
- Compensation for a firefighter's normal, contracted work schedule is reimbursable, but overtime costs are not eligible for reimbursement by the SAFER Program grant award (including overtime for holdovers, extra shifts, to attend training, etc.). Only costs for overtime that the fire department routinely pays as a part of the base salary or a firefighter's regularly scheduled and contracted shift hours, to comply with FLSA, are eligible. For more information on FLSA, please visit the U.S. Department of Labor.
- Salaries and benefits of firefighters hired with SAFER Program funding while they are engaged in initial recruit training are eligible.

Eligibility Requirements:

- Only firefighters hired after the SAFER Program grant offer of award ("New Hires") are eligible for grant funding.
- Only full-time positions are eligible for funding. A full-time position is one position that is funded for at least 2,080 hours per year, e.g., 40 hours per week, 52 weeks per year.
- SAFER Program grant funds will only pay for operational positions, whose primary assignment (greater than or equal to 50 % of the time) is on a fire suppression vehicle, regardless of collateral duties.

Hiring Activity – Eligible Costs and Requirements

- Only volunteer and mostly volunteer fire departments may hire individuals to fill officer-level positions (e.g., chief, fire inspector, training officer, safety officer) in addition to their primary operational assignment.
- Funds received under the SAFER Program must not be used to replace funds that would be available from state or local sources, or from the Bureau of Indian Affairs, but shall be used to increase the amount of funding that would, in the absence of Federal funds received, be made available from state or local sources, or funds supplied by the Bureau of Indian Affairs.

Hiring Activity - Ineligible Costs

- Salaries and benefits for full-time firefighters who were employees at the time of grant award are ineligible.
- Salaries and benefits for job-sharing positions (e.g., utilizing more than one person to fill a full-time SAFER Program-funded position) are ineligible.
- SAFER Program funding may not be used to fund promotions for existing members (i.e., to promote a current member by placing the member in a new SAFER Program-funded position with a higher salary).
- Pre-application costs, such as grant writer fees, administrative hiring costs (e.g., physicals, medical exams, background checks, etc.), and indirect costs associated with hiring firefighters are ineligible.
- Costs to train and equip firefighters (e.g., personal protective equipment or Turnout Gear) are ineligible unless they are salaries and benefits for firefighters hired under the SAFER Program while they are engaged in training.
- Costs for additional benefits such as uniform allowances, education stipends, meal allowance, etc., are ineligible unless they are contractually obligated, included as part of the standard benefits package for all employees, and reimbursed via payroll.
- Costs of annual physicals or medical exams are ineligible.
- Overtime costs are ineligible unless they are costs that the fire department routinely pays as a part of the base salary or a firefighter's regularly scheduled and contracted shift hours to comply with the Fair Labor Standards Act (FLSA).
- M&A costs.
- Indirect costs.

R&R Activity – Eligibility Requirements

- Applicants must clearly connect the requested activities to the specific recruitment or retention challenges they aim to address. FEMA will not approve funding for any budget item unless the applicant provides enough detail showing how it will improve recruitment and retention. Costs must be reasonable, as determined by FEMA.
- Applicants who propose to focus on retention of volunteers will receive equal consideration as applicants focusing on recruitment of volunteers. A focus on retention may include providing incentives for volunteer firefighter members to continue service in a fire department.

R&R Activity – Eligibility Requirements

- SAFER Program grant funds may only be used for volunteer firefighters who are involved with, or trained in, the operations of firefighting and emergency response.
- FEMA recommends that departments consult their AHJ or the department's legal counsel to understand the full legal and financial implications involved with implementing or sustaining programs that offer benefits or financial awards to firefighters (e.g., stipends, Length of Service Award Program (LOSAP), or Retirement Program).
- All grant-related purchases and activities must be incurred, received and completed within the POP. The period of coverage or service delivery on all contracts and agreements may not begin prior to or extend beyond the POP of the grant. FEMA may permit prorated costs to be charged to the grant for training courses that begin during the period of performance but end after the POP ends.
- All funded activities under the R&R Activity must be governed by formally adopted Standard Operating Procedures (SOPs). Minimally, these SOPs should specify who qualifies for each of the incentives, specific requirements for earning the incentives, and the disposition of the awarded incentives if an individual fails to fulfill the stipulations. FEMA may ask for copies of SOPs before or after being awarded.
- Funds received under the SAFER Program must not be used to replace funds that would be available from state or local sources, or from the Bureau of Indian Affairs, but shall be used to increase the amount of funding that would, in the absence of Federal funds received, be made available from state or local sources, or funds supplied by the Bureau of Indian Affairs.

R&R Activity – Eligible Costs: High Priority

- Costs to conduct a staffing needs assessment to determine the operational staff and support necessary for the fire department to perform its duties safely and effectively. This may include costs for data collection supplies, hiring contractors or personnel to gather and analyze data, and purchasing software programs.
  - **Note:** If a staffing needs assessment is requested and the application is selected for funding, the staffing needs assessment will be the only activity that will be funded.
- Costs to support a R&R Coordinator, a Program Manager, and/or a Grant Administrator (including reasonable salary, fringe benefits, contract support, supplies, travel, etc.).
  - **Note:** Computers for these positions are low priority items.
- Marketing Program to recruit new volunteer firefighters, such as:
  - Media advertising (e.g., television, radio, social media);
  - Print advertising (e.g., newspapers, billboards, signs, banners, brochures, flyers); and,
  - LED/electronic sign. Note: This is a high priority item only when included as part of a comprehensive marketing program. Only one LED/electronic sign is allowed per applicant and 75% of usage must be dedicated to R&R activities. Allowable costs may be limited to reasonable amounts as determined by FEMA. Additional restrictions apply (for details see Section 10.B.a. Environmental Planning and Historic Preservation (EHP) Compliance of this NOFO).

R&R Activity – Eligible Costs: High Priority
○ **Note:** If requesting funds to recruit new members, a marketing plan must be in place, or the application must show a marketing plan will be implemented either with grant funds (requested as a line item) or that the applicant will implement a marketing plan using existing department resources. • New Member Costs may include: ○ Entry-level physical exam for each new recruit; ○ Annual physicals for newly recruited members; and ○ Station duty uniforms. • Wellness and Fitness for Existing Members. Wellness and Fitness costs of an annual exam may include: ○ Physical exams; ○ Job-related immunization; ○ Periodic Physical Exam/Health Screening; ○ Behavioral health; ○ Traditional therapies and preventative care facilitated by a licensed mental health or physical healthcare provider; and ○ Cancer Screening Program to meet NFPA 1582. ○ **Note:** All grant-funded physicals (except those for explorers/cadets) must meet NFPA 1582 standards (Chapter 9, Occupational Medical Evaluation). • Employee Assistance Program (EAP) to provide behavioral health training for coping with fire service duties. • New Recruit Basic Training: Training required by the Authority Having Jurisdiction (AHJ) to meet minimum firefighter certification (e.g., CPR, First Responder, EMT, FF1, FF2) that is not covered under the department's normal operating budget is eligible. ○ Reimbursement is also eligible for members' lost wages, mileage/transportation costs, lodging, and per diem while attending required basic training. ○ **Note:** Mileage/transportation, lodging and per diem costs must comply with the department's written travel policies and procedures. If no policies are established, reimbursement will be at the federal government rate. • Leadership or Career Development Training: Leadership or career development training, when used as a retention incentive and not covered under the department's normal operating budget, is eligible. ○ Reimbursement is also eligible for members' lost wages, mileage/transportation costs, lodging, and per diem while attending leadership/career development training or conferences. ○ **Note:** Mileage/transportation, lodging, and meal costs must comply with the department's written travel policies and procedures. If no policies are established, reimbursement will be at the federal government rate. ○ To be eligible, courses must provide Continuing Education Units (CEU) or certificates of completion. • Instructor/train-the-trainer training that is not covered under a department's normal operating budget. • Reimbursement to members for lost wages, mileage and transportation costs, lodging costs, and per diem while attending instructor/train-the-trainer training are also eligible.

R&R Activity – Eligible Costs: High Priority

- **Note:** Costs for mileage/transportation, lodging, and per diem must comply with the department's written travel policies and procedures. If policies are not established, costs will only be reimbursed at the federal government rate.

- Tuition assistance for higher education (including books, lab fees and student fees).
  - Coursework or certifications in this category should be more advanced than what departments typically fund for required minimum-staffing requirements and specific to an accredited university or trade school program.
  - Courses are not limited to firefighter training or education.
  - Only tuition payments for classes offered and taken during the POP are allowable.
  - Computers for individual students are not eligible for funding.
  - Payments for student loans are not eligible for funding.
  - Recipients must provide internal policies that explain how funding is administered.
  - Allowable costs may be limited to reasonable amounts, as determined by FEMA.
- Personal Protective Equipment (PPE) or Turnout Gear.
  - PPE may only be funded for new firefighters that join the department after the date of grant award, that successfully pass an NFPA 1582-compliant physical, and that are certified as "fit for duty." PPE purchased with SAFER Program funding must be utilized by adequately trained staff.
  - Funds are available to acquire Occupational Safety and Health Administration-required and NFPA-compliant PPE for firefighting personnel. In addition, PPE must meet any national or state standards and increase firefighter safety. Failure to meet these requirements may result in ineligibility for PPE funding. Copies of NFPA standards may be reviewed at http://www.nfpa.org/freeaccess.
  - Only actual costs for PPE are allowed.
  - Allowable costs may be limited to reasonable amounts, as determined by FEMA.
  - To receive payment, recipients must provide the following documentation to support the purchase of PPE:
    - Proof of cost (e.g., invoices) and proof of payment (e.g., canceled checks, bank statements, electronic funds transfers) for PPE.
    - Proof that the firefighter(s) have passed an NFPA 1582-compliant physical and are certified as "fit for duty."
  - Eligible PPE Costs:
    - Only one set of PPE for structural and wildland firefighting per each new recruit.
    - The SAFER Program considers a complete set of structural PPE to be composed of one self-contained breathing apparatus (SCBA) mask or face piece, one pair of pants, one coat, one helmet, two hoods, one pair of boots, two pairs of gloves, one pair of suspenders, and one pair of goggles. In those jurisdictions where additional PPE, like Personal Safety or Rescue Bailout Systems are statutorily required, the SAFER Program will consider all statutorily required items to be part of a complete PPE set.
    - The SAFER Program considers a complete set of wildland PPE to be comprised of one pair of pants, one coat, one jumpsuit, one helmet, one pair of boots, one pair of gloves, one pair of suspenders, one pair of goggles, one fire shelter, one web gear, one backpack, and one canteen or other hydration system.

R&R Activity – Eligible Costs: High Priority

- LOSAP or Retirement Program:
  - Establishment of a new LOSAP or Retirement Program.
  - Increasing coverage of an existing LOSAP or Retirement Program to include new recruits.

R&R Activity – Eligible Costs: Medium Priority

- Nominal stipends, as defined under Appendix B – Programmatic Information and Priorities, Supporting Definitions for this NOFO in this NOFO for volunteer firefighters who are involved with, or trained in, the operations of firefighting and emergency response (e.g., Pay-per-Call, Points Based System, etc.). Stipends may only be provided for participation in operational (firefighting) activities, such as duty shifts, operational training, or responding to incidents.
  - Food vouchers may be used for nominal stipends if the Narrative supports their use as an effective recruitment and retention tool for the department. However, food vouchers must be issued through formally adopted SOPs.
  - Award recipients must maintain records of all food vouchers including firefighter name, amount, date received, and signature of the receiving firefighter.
  - Gift cards may not be used for nominal stipends. For information on gift cards, see Low Priority – Awards/Incentives below.
  - Only actual costs for stipends are allowed.
  - Allowable costs may be limited to reasonable amounts as determined by FEMA.
- Costs to support explorer, cadet, or mentoring programs, such as:
  - Only one set of station duty uniforms (the SAFER Program considers one set of station duty uniform as one pair of pants, one shirt, one hat, and one pair of boots) for each newly recruited cadet/explorer per the department's documented uniform policy.
  - Training (Non-Immediate Danger to Life and Health [IDLH]), including training supplies.
  - One set of structural or wildland PPE as defined above for each new cadet/explorer that joins the department after the date of grant award, with the following two exceptions: 1) SCBA mask/face pieces are not eligible because PPE for explorers/cadets may not be used in an IDLH atmosphere, and 2) physicals for explorers/cadets are not required to meet NFPA 1582.
  - One introductory physical exam per each newly recruited explorer/cadet.
  - Nominal stipends, when governed by a formally adopted SOP and provided consistent with applicable state and federal labor laws.
- Insurance packages (e.g., AD&D, workers compensation, disability, health, dental, life).
- Exercise equipment is limited to no more than $10,000 total per grant award.
- Wellness programs. Wellness program costs are only eligible for funding if the application also requests funding for a High Priority Wellness and Fitness cost (e.g. physical exams). Wellness program costs may include:
  - Candidate physical ability evaluation;
  - Injury/illness rehab;
  - Formal fitness, injury prevention; or
  - International Association of Fire Fighters (IAFF) or IAFC peer fitness trainer program.

R&R Activity – Eligible Costs: Low Priority

- New Member Costs. Only one set of station duty uniforms for new firefighters that join the department after the date of grant award, per the department's documented uniform policy. The SAFER Program considers one set of station duty uniforms as one pair of pants, one shirt, one hat, and one pair of boots. Class A or B uniforms (e.g., Dress Uniforms) and badges are not eligible costs.
- American National Standards Institute-approved retro-reflective highway apparel.
- PPE gear bags.
- Costs for advanced training not currently covered under the department's operating budget (e.g., extrication training, specialized equipment training, swift water rescue, etc.). Advanced training requests are only eligible for members who have already met the minimum firefighter certifications required by the AHJ and must closely correlate to the applicant's recruitment and retention goals.
  - Reimbursement to members for lost wages, mileage and transportation costs, lodging costs, and per diem while attending advanced training are also eligible.
  - **Note**: Costs for mileage and transportation costs, lodging costs, and per diem must comply with the department's written travel policies and procedures. If policies are not established, costs will only be reimbursed at the federal government rate.
- Two computers (including monitor, keyboard, mouse) and printer for grant-appointed R&R Coordinator, Program Manager, and/or Grant Administrator.
- Awards or Incentive program for participation in operational (firefighting) activities, such as operational training or responding to incidents (e.g., gift cards for top responders, non-uniform clothing).
  - Non-uniform clothing is only eligible as part of an award program. Non-uniform clothing is limited to a shirt, jacket or pullover. Class A or B uniforms (e.g., Dress Uniforms) are not eligible costs.
  - A logbook for the purchase and issuance of gift cards is required. The logbook must include name of recipient, date, amount of card, reason for issuance, and signature of recipient. Gift cards should be issued to operational firefighters who have completed the minimum firefighter training required by the AHJ.
- LED/electronic sign when it is not included as part of a comprehensive marketing program.
- Fire service association membership fees.
- Projector or screen to support classroom training.
- Payments for housing or rent for volunteers at or near the fire station.
- Other costs associated with new recruits (background checks, aptitude tests, etc.).
- Station modifications, remodeling or renovation of existing facilities.
  - Remodeling or renovations to an existing facility are allowable (e.g., converting space into bunkroom) and must directly relate to the identified recruitment or retention problems or issues being addressed with the grant. The renovations must be minor interior alterations not to exceed $10,000 total per grant award.
  - Remodeling or renovations may not change the footprint or profile of the building.

R&R Activity – Eligible Costs: Low Priority

- A request for modifications to facilities may require EHP review (for details see Section 10.B.a. Environmental Planning and Historic Preservation (EHP) Compliance of this NOFO). Recipients are encouraged to have completed as many steps as possible for a successful EHP Review in support of their proposal for funding, including coordination with their State Historic Preservation Office to identify potential historic preservation issues and to discuss the potential for project effects, and compliance with all state and EHP laws and requirements. Preservation Office to identify potential historic preservation issues and to discuss the potential for project effects, and compliance with all state and EHP laws and requirements.
- Written approval must be provided by FEMA before using any SAFER Program funds for remodeling or renovation. If awarded funds for remodeling or renovation, recipients may be required to submit evidence of approved zoning ordinances, architectural plans, any other locally required planning permits, and a notice of interest.

R&R Activity – Eligible Costs: Non-Prioritized Costs

- M&A costs up to 3 % of the total awarded amount in accordance with 2 C.F.R. Part 200, Uniform Administrative Requirements, Cost Principles, and Audit Requirements for Federal Awards. M&A costs must be identifiable and directly related to the implementation and management of the SAFER Program grant. Salaries and fringe benefits for personnel directly supporting the grant are not required to be included in the M&A budget line item.
- Indirect costs for national, state, local or federally recognized Tribal Nation volunteer firefighter interest organizations that are expended pursuant to Section 3.H. Indirect Costs (Facilities and Administrative Costs).
- Up to $1,500 in grant writer fees for application preparation but not grant administration. The fee must have been paid between 90 days before the publication date of this NOFO and up to 30 days of the end of the application period and prior to any contact with SAFER Program Office staff or an Offer of Award. For details see Appendix C – Award Administration Information, Grant Writer/Preparation Fees.
- Audit costs proportional to the total SAFER Program award. Recipients of multiple federal funding sources can only charge a pro rata share of the audit cost(s) to the SAFER Program award, and they must be incurred during the POP.

R&R Activity – Ineligible Costs

This list is not exhaustive:

- Salary and benefits for firefighters.
- Retroactive payments or recognition for operational services or non-operational activities (including payments, gift cards, recruitment bonuses, or stipends for recruiting firefighters) rendered prior to the grant award.
- Costs incurred (including the delivery of goods or services) outside of the period of performance except for grant writer fees; see Appendix C – Award Administration Information, Grant Writer/Preparation Fees.

R&R Activity – Ineligible Costs

- Fire suppression equipment.
- Vehicles.
- Fire simulators, fire evolution, or fire training props (e.g., burn trailers, forcible entry, rescue/smoke maze, flashover simulators).
- Supplies, expendables, or "one time" use items such as foam, fuel/propane, breaching materials (e.g., wood or sheetrock).
- Sirens, warning lights for fire department or private vehicles, or other outdoor warning devices.
- Communication equipment and monthly expenses including cell phones, pagers, portable radios, or Computer-aided Dispatch systems.
- Video cameras or recording equipment.
- Photographs or photographer services, unless part of a marketing contract for recruitment of new members.
- Intruder alerting systems and deployment notification systems.
- Payments for travel to or participation in leisure or social activities such as theater tickets, entertainment tickets, and trips (e.g., professional sporting events).
- Costs associated with award banquets, such as food, photographers, refreshments, entertainment, or rental facilities. Reimbursement for actual awards (e.g., plaques and trophies) is eligible.
- Costs for food or refreshments that are not part of a conference or training hosted by the grant recipient (food vouchers can be requested as a nominal stipend but must be provided only under formally adopted SOPs).
- Costs for training currently covered under the department's operating budget (e.g., tuition or instructor fees for department-mandated, basic-level training).
- Tuition assistance for family members of the volunteer.
- Services at a member's personal residence (e.g., internet access, plowing of driveways).
- Furniture (except for newly converted bunkrooms), televisions, fixtures, appliances (e.g., refrigerators), and entertainment equipment.
- "Giveaways" for recruitment events, such as stickers, pencils, pens, t-shirts, cups, mugs, or balloons.
- Fees for courses and training that are available free of charge on the internet or at state or local training facilities (e.g., NIMS 100, 700, 800).
- Costs for fuel. Costs for travel to training or other eligible activities are reimbursed through mileage rates.
- Gym Memberships.
- Payments for student loans.
- Mileage reimbursement for responding to incidents or periodic operational training at the fire house. Mileage reimbursement is allowed for other types of training as explained under eligible costs.
- Station internet access or user fees and equipment to install internet, such as routers.
- Continued funding of an existing (or previously funded through the SAFER Program) LOSAP or Retirement Program.

R&R Activity – Ineligible Costs

• Computers in common areas or individual computers for training or education.
• Copiers and printers.
• Incentives for career firefighters within the recipient's fire department.
• Ineligible explorer, cadet, mentoring program expenditures:
  o SCBAs, including masks/face pieces.
  o Anything involving the IDLH atmosphere.
  o Any activities precluded by the AHJ.
• Ineligible PPE expenditures:
  o Three-quarter length rubber boots.
  o SCBAs (not including SCBA masks or face pieces).
  o PASS Devices.
  o Spare cylinders.
  o Bomb disposal suits.
  o PPE for hazardous materials and other specialized incidents.
  o More than one set of structural or wildland PPE per newly recruited member (within the period of performance).
• PPE for existing members, R&R Coordinator, Program Manager, and/or Grant Administrator.

13. Appendix C – Award Administration Information

Appendix C contains detailed information on SAFER Program Award Administration. Reviewing this information may help recipients in the programmatic and financial administration of their award(s).

A. Help FEMA Prevent Fraud, Waste and Abuse

If applicants or recipients have information about instances of fraud, waste, abuse or mismanagement involving FEMA programs or operations, they should contact the DHS OIG Hotline at (800) 323-8603, by fax at (202) 254-4297, or email to HOTLINE@oig.dhs.gov.

B. Grant Writer and Preparation Fees

Fees for grant writers may be included as a pre-award expenditure. For grant writer fees to be eligible as a pre-award expenditure, the services must be competitively sourced, specifically identified, and listed within the "Grant Request Details" section of the application and must satisfy the requirements under 2 C.F.R. § 200.458. FEMA will only consider reimbursements for application preparation, not administration, up to $1,500 peryear. Grant writer fees must be paid between the 90 days beforethe publication date of this NOFO and up to 30 days after the application period closes. For the grant writer fees held either on retainer or subscription basis to be an eligible pre-award cost, the claimed retainer or subscription must have been competitively secured, and the costs are limited to the start of the appropriation period for the underlying award and meet the requirements under 2 C.F.R. § 200.458. Fees payable on a contingency basis are not an eligible expense.

Pursuant to 2 C.F.R. Part 180, recipients may not use federal grant funds to reimburse any entity, including a grant writer or preparer, if that entity is presently suspended or debarred by the federal government from receiving funding under federally-funded grants or contracts. Recipients must verify that the contractor is not suspended or debarred from participating in specified federal procurement or non-procurement transactions pursuant to 2 C.F.R. § 180.300.

Before submitting the application, please review all work produced by grant writers or other third parties for accuracy. By submitting the application, applicants are certifying all information contained therein is true and an accurate reflection of the organization. Regardless of the applicant's intent, the submission of information that is false or misleading may result in consequences imposed by FEMA. These consequences may include, but are not limited to, the submitted application not being considered for award, temporary withholding of funding under the existing award pending investigation, or referral to the DHS OIG.

The following documentation shall be provided to FEMA upon request:

1. A copy of the grant writer's contract for services;
2. A copy of the invoice or purchase order;
3. A copy of the canceled check (front and back); and
4. Evidence that the services were competitively procured.

Failure to provide the requested documentation may result in the grant writer fee being deemed ineligible and the grant reduced accordingly.

Note: FEMA requires that all applicants identify the following as "Application Participants" in the "Contact Information" section of the application: Any individual or organization that assisted with the development, preparation, or review of the application to include drafting or writing the narrative and budget; whether that person, entity, or agent is compensated or not; and whether the assistance took place before submitting the application.

C. Maintenance and Sustainment

The use of FEMA Preparedness Grant funds for the cost of repairs or replacement, as well as maintenance contracts, warranties, and user fees may be allowable.

Routine upkeep and the supplies, expendables, or one-time use items that support routine upkeep (e.g., gasoline, tire replacement, routine oil changes, monthly inspections, or grounds and facility maintenance) are the responsibility of the recipient and may not be funded with SAFER Program funding.

Generally, when purchasing a maintenance agreement, service contract, or extended warranty for systems or equipment, the period of coverage provided under such a plan may not extend beyond the period of performance of the grant with which the agreement, warranty or contract is purchased.

D. Taxes, Fees, Levies and Assessments

Taxes, fees, levies or assessments that the recipient is legally required to pay and are directly related to any eligible SAFER Program acquisition activity may be charged to a SAFER Program award pursuant to 2 C.F.R. § 200.470. These charges shall be identified and enumerated in the SAFER Program application narrative, as well as the "Grant Request Details" section of the acquisition activity.

Any avoidable and unreasonable costs that result from the action or inaction of a recipient (or recipient's agent) or that prevent that recipient from enjoying any lawful exemption, waiver or reduction of any tax, fee, levy or assessment directly related to any eligible SAFER Program acquisition activity are not chargeable to any SAFER Program award.

Example: Governmental entities and Public Safety Agencies are exempt from some Federal Communications Commission (FCC) fees, but only if the eligible organization submits an exemption or waiver request to the FCC.

E. Excess Funds

FEMA expects recipients to complete awarded activities within the budget allocated. However, excess funds may remain after completing the original project described in the recipient's award. This may be due to cost savings from under-budget acquisition activities or competitive procurement processes. These excess funds are to generally be deobligated and may not be used for additional activities.

FEMA may consider exceptions if urgent and compelling needs are identified that directly relate to a demonstrated event(s) impacting the health and safety of the department's firefighters, such as a presidentially declared disaster. Requests must be submitted at least 120 days before period of performance expiration.

Note: The opportunity for excess funds is limited when the Scope of Work is changed via an amendment such as reduction in quantities.

F. Payments and Amendments

SAFER Program payment requests from non-federal entities will be governed by applicable federal regulations in effect at the time a grant is awarded to the recipient and may be either advances or reimbursements. Recipients should not expend funds until all special conditions listed on the grant award document have been met, including completion of EHP review, and the request for payment in FEMA GO has been approved. Recipients should draw down funds based upon immediate disbursement requirements; however, FEMA strongly encourages recipients to draw down funds as close to disbursement or expenditure as possible to avoid accruing interest.

Non-federal entities should keep detailed records of all transactions involving the grant. FEMA may at any time, request copies of any relevant documentation and records, including purchasing documentation along with copies of cancelled checks for verification. See, e.g., 2 C.F.R. §§ 200.318(i), 200.334, 200.337.

Advances

Recipients shall be paid in advance, provided they maintain or demonstrate the willingness and ability to maintain procedures to minimize the time elapsing between the transfer of funds and disbursement by the recipient (not to exceed 30 days), and their financial management systems meet the standards for fund control and accountability established in 2 C.F.R. Part 200. The recipient shall include all applicable source documentation such as invoices, purchase orders, contracts, etc., to support the costs associated with the advance SAFER Program payment requests. EHP review requirements must be met before advanced payments are made.

Reimbursement

Payment by reimbursement is the preferred method when the requirements to be paid in advance, pursuant to 2 C.F.R. § 200.305, cannot be met. In accordance with U.S. Department of Treasury regulations at 31 C.F.R. Part 205, if applicable, the recipient shall maintain procedures to minimize the time elapsing between the transfer and disbursement of fundsAs a prerequisite of SAFER Program approval for reimbursement requests, recipients shall submit all applicable source documentation, including payroll records, timecards, contracts, invoices, purchase orders, and proof of payment (e.g., canceled checks, bank statements, electronic funds transfers) to support the costs associated with each payment request.

Rebates

Recipients shall disburse program income, rebates, refunds, contract settlements, audit recoveries, and interest earned on such funds before requesting additional cash payments, in accordance with 2 C.F.R. § 200.305.

Payment Requests During Closeout

Recipients may submit reimbursement payment requests only during the 120 days following the end of the award's period of performance, as part of the closeout reconciliation process under 2 C.F.R. § 200.344. These requests must be for reimbursement payments only, as no other types of payment requests are allowed after the period of performance has expired. The expenditure must have been obligated and received during the award's period of performance. The request must include clear and specific information certifying that the reimbursement is for an obligation properly incurred during the active period of performance.

FEMA may request supporting documentation for the reimbursement at any time for review.

Amendments

FEMA may approve SAFER Program award amendments on a case-by-case basis for the following reasons:

- Extending the period of performance to complete the scope of work under the Recruitment and Retention (R&R) Activity.
- Changes to the activity, mission, retroactive approval (pre-award), or closeout issues.

- Budget changes, including adding funds to the award or non-closeout deobligation of funds.
- Changes to key personnel.

Amendment requests must be submitted through FEMA GO and include specific, compelling justifications for the change. Amendments or changes to the scope of work may require additional Environmental and Historic Preservation (EHP) review. FEMA strongly encourages recipients to use grant funds promptly to align with SAFER goals and objectives.

Deobligation of Funds

Recipients may return unused funds (e.g., funds drawn down but not used or award funding never requested) before the end of the award's period of performance. To do this, recipients must submit an amendment through FEMA GO and include the following:

- A statement that the unliquidated funds are not needed to fulfill the grant's obligations or mission.
- Confirmation that they understand the returned funds will be deobligated and unavailable for future expenses.

Deobligating funds will reduce the federal portion of the grant and the recipient's cost share obligation. FEMA will confirm deobligation requests with all points of contact. Once confirmed, FEMA will hold the approved request for 14 days to allow the recipient time to reconsider before processing the deobligation.

G. Disposition of Grant-Funded Equipment

A recipient must use, manage and dispose of SAFER Program-funded equipment in accordance with the Uniform Administrative Requirements, Cost Principles, and Audit Requirements for Federal Awards at 2 C.F.R. § 200.313. Except for state governments, when original or replacement equipment acquired under a SAFER Program award is no longer needed for the original project, program, or other activities currently or previously supported by a federal awarding agency, the recipient must request disposition instructions from FEMA. FEMA strongly recommends contacting the SAFER Help Desk before disposing of SAFER -funded equipment.

H. Post-Award Recipient Responsibilities

Once awarded, recipients under the Hiring Activity must submit a pre-SAFER Program roster of paid operational firefighting personnel who were employees at the time of the award. This roster, which supports NFPA 1710 or NFPA 1720 standards, will be compared to the names of SAFER Program-funded positions to ensure that the funded firefighters are new employees.

The SAFER Program Office will work with recipients to establish the correct staffing maintenance number. The staffing maintenance number is a sum of the number of paid operational firefighting personnel who were employees at the time of award and the number of SAFER Program-funded positions. Recipients must agree to maintain this staffing level throughout the period of performance by actively and promptly filling any vacancies.

Staffing Maintenance and Layoffs

- Recipients who lay off operational personnel during the period of performance will be considered in default of their grant, and the award will be terminated. In such cases, recipients may be required to return federal funds received under the grant.
- If recipients face a documented economic hardship that prevents them from backfilling non-SAFER Program operational positions vacated through attrition (e.g., resignation, retirement), they may petition FEMA for a waiver of the staffing maintenance requirements.
- Applicants and recipients should actively coordinate and collaborate with their local and state authorities to help ensure and prioritize the commitment of future non-federal investments in order to sustain staffing capabilities once an award's period of performance ends.

Waiver Conditions

- Approved waivers allow recipients to reduce and reestablish the staffing maintenance numbers agreed to at the time of the award by the number of positions they cannot fill.
- The economic hardship must affect the entire public safety sector in the recipient's jurisdiction, not just the fire department.
- FEMA will not grant waivers for SAFER -funded positions.
- Recipients who fail to maintain required staffing levels risk losing federal funds awarded under the grant.

Volunteer Firefighting and Anti-Discrimination
Recipients must agree that firefighters hired under these grants will not be discriminated against or prohibited from participating in volunteer firefighting activities in another jurisdiction during off-duty hours.

Veteran Recruitment
FEMA strongly encourages recipients to actively seek, recruit, and hire military veterans to increase their department's ranks, whenever practicable.

CITY OF FAYETTEVILLE ARKANSAS

CITY COUNCIL MEMO
2026-1959

MEETING OF JUNE 16, 2026

TO: Mayor Rawn and City Council

THROUGH: Keith Macedo, Chief of Staff

FROM: Alison Jumper, Director of Parks, Natural Resources and Cultural Affairs

SUBJECT: **Approval of land acquisition**

RECOMMENDATION:
Approval to enter into an agreement with Tommie Flowers Davis, Trustee of the Tommie Flowers Davis Trust for the purchase of approximately 1720 square feet of land adjacent to Buddy Hayes Park for $52,500 and for an additional $10,000 to provide funds for a project contingency for closing costs and other related expenses; and approval of a budget amendment to recognize Southeast quadrant park land dedication funds in the total amount of $62,500.

BACKGROUND:
Buddy Hayes Park is located in the center of the city, adjacent to the Yvonne Richardson Community Center. An adjacent property owner is looking to develop their property.

DISCUSSION:
The water and sewer committee met on April 14, 2026 to review a potential cost share agreement with the adjacent landowner for utilities installation. During the meeting, the applicant proposed an option for the City to purchase a portion of the adjacent property to expand Buddy Hayes Park to help offset the cost of utility installation. This proposal was determined by the Water and Sewer Committee as favorable and recommended the City move forward with that option.

The proposed 1750 sf expansion is located on the northwest corner of Buddy Hayes Park and includes the east side of the creek and opens up an opportunity for the city to control both sides of the creek and continue streamside restoration efforts.

City land agents provided comparable land sales in the area ranging from $30.57 to $31.65/sf. The offer is to purchase approximately 1750sf of land at $30/sf for $52,500.

BUDGET/STAFF IMPACT:
Parkland Dedication funds in Southeast Quadrant are available.

ATTACHMENTS: 3. Staff Review Form, 4. Budget Amendment, 5. Proposed Purchase Exhibit, 6. Land Sale Agreement - Tommie Flowers Davis Trust, 7. Parkland Split 21-459

113 West Mountain Street
Fayetteville, AR 72701
(479) 575-8323

File #: 2026-1959

A RESOLUTION TO APPROVE A LAND SALE AGREEMENT WITH TOMMIE FLOWERS DAVIS FOR THE PURCHASE OF PROPERTY ADJACENT TO BUDDY HAYES PARK IN THE AMOUNT OF $52,500.00, TO APPROVE A CONTINGENCY IN THE AMOUNT OF $10,000.00, AND TO APPROVE A BUDGET AMENDMENT

WHEREAS, Buddy Hayes Park is located in the center of the city, adjacent to the Yvonne Richardson Community Center, and the adjacent property owner has requested a cost share for utilities installation that will serve that area; and

WHEREAS, on April 14, 2026, the Water and Sewer Committee considered an option for the City to purchase a portion of the adjacent property to expand Buddy Hayes Park to help offset the cost of utility installation and the Committee recommends approval of the purchase.

NOW, THEREFORE, BE IT RESOLVED BY THE CITY COUNCIL OF THE CITY OF FAYETTEVILLE, ARKANSAS:

Section 1: That the City Council of the City of Fayetteville, Arkansas hereby authorizes Mayor Rawn to sign a land sale agreement with Tommie Flowers Davis, Trustee of the Tommie Flowers Davis Trust for the purchase of approximately 1,720 square feet of property located adjacent to Buddy Hayes Park in the amount of $52,500.00, approves a contingency in the amount $10,000.00, and further authorizes Mayor Rawn to sign all documents necessary to effectuate the purchase.

Section 2: That the City Council of the city of Fayetteville, Arkansas hereby approves a budget amendment, a copy of which is attached to this Resolution.

City of Fayetteville Staff Review Form

2026-1959

Item ID

6/16/2026

City Council Meeting Date - Agenda Item Only
N/A for Non-Agenda Item

Alison Jumper	5/26/2026	PARKS & RECREATION (520)
Submitted By	**Submitted Date**	**Division / Department**

Action Recommendation:

Approval of a budget amendment to recognize Southeast quadrant park land dedication funds in the total amount of $62,500 to provide funds for the purchase of approximately 0.04 acres of land adjacent to Buddy Hayes Park from Tommie Flowers Davis, Trustee of the Tommie Flowers Davis Trust and approval to enter the agreement for the purchase of this land for $52,500 and for an additional $10,000 to provide funds for a project contingency for closing costs and other related expenses.

Budget Impact:

2250.520.9256-5805.00	Park Development
Account Number	Fund
02013.2401	Neighborhood Park Development, Buddy Hayes Park
Project Number	Project Title

Budgeted Item?	Yes	Total Amended Budget	$	416,010.00
		Expenses (Actual+Encum)	$	8,008.00
		Available Budget	$	**408,002.00**
Does item have a direct cost?	Yes	Item Cost	$	52,500.00
Is a Budget Amendment attached?	Yes	Budget Amendment	$	62,500.00
		Remaining Budget	$	**418,002.00**

Purchase Order Number: _____ **Previous Ordinance or Resolution #** _____

Change Order Number: _____ **Approval Date:** _____

Original Contract Number: _____

Comments:

City of Fayetteville, Arkansas - Budget Amendment/Adjustment (Agenda)

Budget Year	Division /Org2	BA Number
2026	PARKS & RECREATION (520)	
	Requestor: Alan Bearden	

BUDGET AMENDMENT/ADJUSTMENT DESCRIPTION:

Budget adjustment to recognize Southeast quadrant park land dedication funds in the amount of $62,500 to provide funds for a land acquisition for Buddy Hayes Park (YRCC) expansion from Tommie Flowers Davis, Trustee of the Tommie Flowers Davis Trust. This includes $52,500 for the purchase of the land and an additional $10,000 for a project contingency for closing costs and other related expenses.

COUNCIL DATE: 6/16/2026

ITEM ID#: **2026-1959**

Holly Black
6/4/2026 3:18 PM

Budget Division Date

TYPE: **D - (City Council)**

JOURNAL #:

GLDATE:

RESOLUTION/ORDINANCE

CHKD/POSTED: /

v.202658

TOTAL	62,500	62,500				
	Increase / (Decrease)		Project.Sub#			
Account Number	Expense	Revenue	Project	Sub.Detl	AT	Account Name
2250.520.9256-4419.03	-	62,500	02013	2401	RE	Greenspace Fees - SE
2250.520.9256-5805.00	52,500	-	02013	2401	EX	Land - Acquisition
2250.520.9256-5911.99	10,000	-	02013	2401	EX	Contingency - Capital Project
	-	-				
	-	-				
	-	-				
	-	-				
	-	-				
	-	-				
	-	-				
	-	-				
	-	-				
	-	-				
	-	-				
	-	-				
	-	-				
	-	-				

TRACT SPLIT

Proposed Purchase

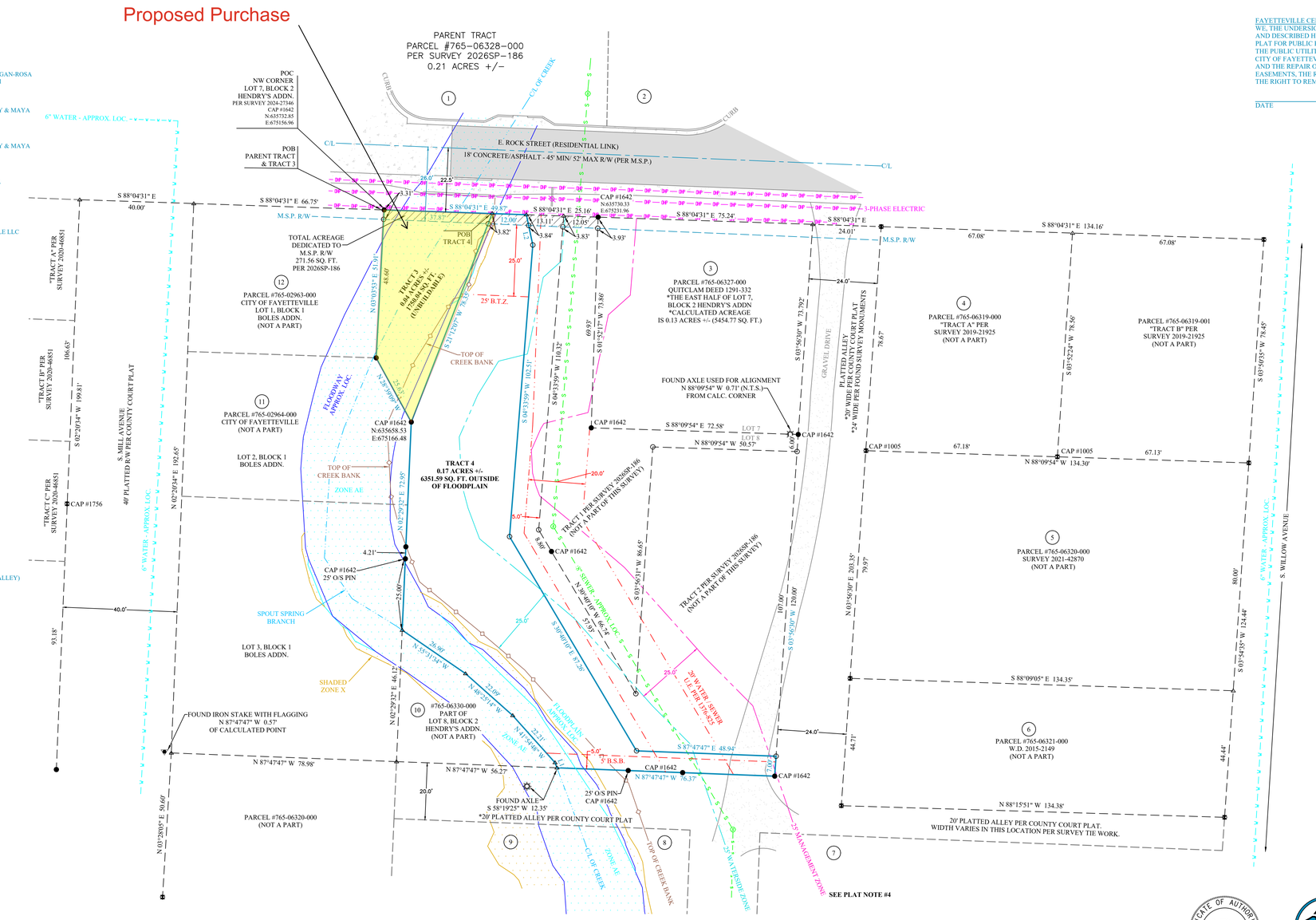

ADJACENT LAND OWNERS

1) CITY OF FAYETTEVILLE
113 W MOUNTAIN ST
FAYETTEVILLE, AR 72701
PARCEL #765-06387-000
ZONED: P-1
2) CITY OF FAYETTEVILLE
113 W MOUNTAIN ST
FAYETTEVILLE, AR 72701
PARCEL #765-12808-000
ZONED: P-1
3) MAYFIELD, AMY
6184 BARBERRY HOLW
COLUMBUS, OH 43213-3305
PARCEL # 765-06327-000
ZONED: UN
4) CALDWELL, AARON RICHARD & MEGAN-ROSA
4261 NE MEADOWCREEK BLVD APT 101
FAYETTEVILLE, AR 72703
PARCEL #765-06319-000
ZONED: UN
5) SIEMEK, KONRAD B; BATES, WESLEY & MAYA
608 S RAY AVE
FAYETTEVILLE, AR 72701
PARCEL #765-06320-000
ZONED: UN
6) SIEMEK, KONRAD B; BATES, WESLEY & MAYA
608 S RAY AVE
FAYETTEVILLE, AR 72701
PARCEL #765-06321-000
ZONED: UN
7) TATTER, VLADA P & BERRY, ATTILA
700 E WINBAUGH LN
FAYETTEVILLE, AR 72703
PARCEL #765-06322-000
ZONED: RMF-24
8) UNKNOWN
ZONED: RMF-24
9) STEVENS PROPERTIES FAYETTEVILLE LLC
429 E SUTTON ST
FAYETTEVILLE, AR 72701
PARCEL #765-06333-000
ZONED: RMF-24
10) CITY OF FAYETTEVILLE
113 W MOUNTAIN ST
FAYETTEVILLE, AR 72701
PARCEL #765-06330-000
ZONED: RMF-24
11) CITY OF FAYETTEVILLE
113 W MOUNTAIN ST
FAYETTEVILLE, AR 72701
PARCEL #765-02964-000
ZONED: P-1
12) CITY OF FAYETTEVILLE
113 W MOUNTAIN ST
FAYETTEVILLE, AR 72701
PARCEL #765-02963-000
ZONED: P-1
13) TOMMIE FLOWERS DAVIS TRUST
106 N WILLOW AVE
FAYETTEVILLE, AR 72701
TRACTS 1 & 2 PER SURVEY 2026SP-186
ZONED: UN

LAST SITE VISIT:
OCTOBER 22, 2025

BASIS OF BEARING:
GPS OBSERVATION - AR NORTH ZONE
NAD83(2011) HORIZONTAL DATUM

PROPERTY ZONED:
UN (URBAN NEIGHBORHOOD)
- ENDURING GREEN NETWORK
- STREAMSIDE PROTECTION ZONE

BUILDING SETBACKS:
FRONT 25ft (BUILD-TO-ZONE)
SIDE 00ft
REAR 05ft
REAR 12ft (FROM THE C/L OF AN ALLEY)

SURVEY DESCRIPTIONS:

PARENT TRACT (ADJUSTED PARCEL #765-06328-000 PER 2026SP-186):
A PART OF LOTS 7 AND 8 OF BLOCK 2 OF HENDRY'S ADDITION TO THE CITY OF FAYETTEVILLE, WASHINGTON COUNTY, ARKANSAS, BEING MORE PARTICULARLY DESCRIBED AS FOLLOWS, TO-WIT: BEGINNING AT AN EXISTING REBAR MARKING THE NORTHWEST CORNER OF SAID LOT 7 AND RUNNING THENCE S88°04'31"E 49.87', THENCE S12°02'35"E 10.84', THENCE S04°33'59"W 102.51', THENCE S87°47'47"E 48.94', THENCE S03°56'30"W 7.00' TO AN EXISTING REBAR, THENCE N87°47'47"W 76.37' TO THE CENTERLINE OF SPOUT SPRING BRANCH, THENCE ALONG SAID CENTERLINE THE FOLLOWING: N20°33'44"W 1.95', N41°54'48"W 22.21', N48°25'14"W 22.09', N55°31'34"W 26.90', THENCE LEAVING SAID CENTERLINE N02°29'32"E 72.95' TO AN EXISTING REBAR, THENCE N28°39'09"W 25.63' TO AN EXISTING REBAR, THENCE N03°03'53"E 51.91' TO THE POINT OF BEGINNING, CONTAINING 0.21 ACRES, MORE OR LESS, SUBJECT TO THAT PORTION IN EAST ROCK STREET MASTER STREET PLAN RIGHT-OF-WAY ON THE NORTH SIDE OF HEREIN DESCRIBED TRACT AND ALSO SUBJECT TO ALL OTHER EASEMENTS AND RIGHTS-OF-WAY OF RECORD.

TRACT 3:
A PART OF LOT 7 OF BLOCK 2 OF HENDRY'S ADDITION TO THE CITY OF FAYETTEVILLE, WASHINGTON COUNTY, ARKANSAS, BEING MORE PARTICULARLY DESCRIBED AS FOLLOWS, TO-WIT: BEGINNING AT AN EXISTING REBAR MARKING THE NORTHWEST CORNER OF SAID LOT 7 AND RUNNING THENCE S88°04'31"E 37.87', THENCE S21°12'07"W 78.35' TO AN EXISTING REBAR,THENCE N03°03'53"E 51.91' TO THE POINT OF BEGINNING, CONTAINING 0.04 ACRES, MORE OR LESS, SUBJECT TO THAT PORTION IN EAST ROCK STREET MASTER STREET PLAN RIGHT-OF-WAY ON THE NORTH SIDE OF HEREIN DESCRIBED TRACT AND ALSO SUBJECT TO ALL OTHER EASEMENTS AND RIGHTS-OF-WAY OF RECORD.

TRACT 4:
A PART OF LOTS 7 AND 8 OF BLOCK 2 OF HENDRY'S ADDITION TO THE CITY OF FAYETTEVILLE, WASHINGTON COUNTY, ARKANSAS, BEING MORE PARTICULARLY DESCRIBED AS FOLLOWS, TO-WIT: BEGINNING AT A POINT WHICH IS S88°04'31"E 37.87' FROM AN EXISTING REBAR MARKING THE NORTHWEST CORNER OF SAID LOT 7 AND RUNNING THENCE S88°04'31"E 12.00', THENCE S12°02'35"E 10.84', THENCE S04°33'59"W 102.51', THENCE S30°40'10"E 87.26', THENCE S87°47'47"E 48.94', THENCE S03°56'30"W 7.00' TO AN EXISTING REBAR, THENCE N87°47'47"W 76.37' TO THE CENTERLINE OF SPOUT SPRING BRANCH, THENCE ALONG SAID CENTERLINE THE FOLLOWING: N20°33'44"W 1.95', N41°54'48"W 22.21', N48°25'14"W 22.09', N55°31'34"W 26.90', THENCE LEAVING SAID CENTERLINE N02°29'32"E 72.95' TO AN EXISTING REBAR, THENCE N21°12'07"E 78.35' TO THE POINT OF BEGINNING, CONTAINING 0.17 ACRES, MORE OR LESS. SUBJECT TO THAT PORTION IN EAST ROCK STREET MASTER STREET PLAN RIGHT-OF-WAY ON THE NORTH SIDE OF HEREIN DESCRIBED TRACT AND ALSO SUBJECT TO ALL OTHER EASEMENTS AND RIGHTS-OF-WAY OF RECORD.

FAYETTEVILLE CERTIFICATE OF OWNERSHIP & DEDICATION:
WE, THE UNDERSIGNED OWNERS, REPRESENTING ONE HUNDRED PERCENT (100%) OWNERSHIP OF THE REAL ESTATE SHOWN AND DESCRIBED HEREIN, DO HEREBY DEDICATE FOR PUBLIC OWNERSHIP, ALL STREETS AND ALLEYS AS SHOWN ON THIS PLAT FOR PUBLIC BENEFIT AS PRESCRIBED BY LAW. THE OWNERS ALSO DEDICATE TO THE CITY OF FAYETTEVILLE AND TO THE PUBLIC UTILITY COMPANIES (INCLUDING ANY CABLE TELEVISION COMPANY HOLDING A FRANCHISE GRANTED BY THE CITY OF FAYETTEVILLE) THE EASEMENTS AS SHOWN ON THIS PLAT FOR THE PURPOSE OF INSTALLATION OF NEW FACILITIES AND THE REPAIR OF EXISTING FACILITIES. ALSO ESTABLISHED HEREBY IS THE RIGHT OF INGRESS AND EGRESS TO SAID EASEMENTS, THE RIGHT TO PROHIBIT THE ERECTION OF BUILDINGS, STRUCTURES, OR FENCES WITHIN SAID EASEMENTS, AND THE RIGHT TO REMOVE OR TRIM TREES WITHIN SAID EASEMENTS.

DATE

TOMMIE JO FLOWERS-DAVIS - TRUSTEE

PROPERTY OWNERS:
DAVIS, TOMMIE FLOWERS TRUST
106 N WILLOW AVE
FAYETTEVILLE, AR 72701
479-442-9350
(BOTH PARCELS)

PLAT PAGE INDEX:
524

CERTIFICATE OF SURVEYING ACCURACY:
I HEREBY CERTIFY THAT THE PLAN SHOWN AND DESCRIBED HEREON IS A TRUE AND CORRECT SURVEY AND THAT THE MONUMENTS HAVE BEEN PLACED AS STATED HEREON AS REQUIRED BY THE SUBDIVISION REGULATIONS OF THE CITY OF FAYETTEVILLE, ARKANSAS.

DATE OF EXECUTION: _____

SIGNED: _____
REGISTERED LAND SURVEYOR
NO. 1642
STATE OF ARKANSAS

REFERENCE DOCUMENTS:
1) PLAT OF SURVEY FILED IN BOOK 2020 AT PAGE 46851
2) PLAT OF SURVEY FILED IN BOOK 2015 AT PAGE 8177
3) PLAT OF SURVEY FILED IN BOOK 2019 AT PAGE 21925
4) PLAT OF SURVEY FILED IN BOOK 2021 AT PAGE 43870
5) PLAT OF SURVEY FILED IN BOOK 2004 AT PAGE 387
6) FINAL PLAT OF COUNTY COURT ADDITION FILED IN BOOK 4 AT PAGE 13 & BOOK 5 AT PAGE 13
7) WARRANTY DEED FILED IN BOOK 94 AT PAGE 50911
8) WARRANTY DEED FILED IN BOOK 2019 AT PAGE 2323
9) QUITCLAIM DEED FILED IN BOOK 94 AT PAGE 26793
10) WARRANTY DEED FILED IN BOOK 2016 AT PAGE 353
11) QUITCLAIM DEED FILED IN BOOK 1291 AT PAGE 332
12) PLAT OF SURVEY PREPARED BY BATES & ASSOCIATES FOR TOMMIE FLOWERS-DAVIS, DATED; 02/09/22, PROJECT #21-459
13) QUITCLAIM DEED FILED IN BOOK 2022 AT PAGE 35132
14) PLAT OF SURVEY FILED IN BOOK 2024 AT PAGE 27346
15) CORRECTION QUITCLAIM DEED FILED IN BOOK 2025 AT PAGE 10956
16) PLAT OF SURVEY FILED IN BOOK 2026SP AT PAGE 186.

PLAT NOTE:
1) SOME FEATURES AND/OR SYMBOLS ON THIS PLAT MAY BE SHOWN OUT OF SCALE FOR VISUAL CLARITY.

2) THE LOCATION OF UTILITIES SHOWN HEREON ARE FROM OBSERVED EVIDENCE OF ABOVE GROUND APPURTENANCES, GIS, AND/OR UTILITY MAPS PROVIDED BY LOCAL UTILITY COMPANIES. NOT ALL UTILITY COMPANIES MAY HAVE RESPONDED TO OUR REQUEST FOR MAPS AND/OR INFORMATION. ALL UTILITY LINES APPEARING ON THIS PLAT, AS WELL AS THOSE THAT MAY EXIST UNDERGROUND NEED TO BE VERIFIED PRIOR TO DOING ANY TYPE OF EXCAVATION OR DESIGN. SOME UTILITY LINES MAY ALSO EXIST THAT WERE NOT SHOWN ON THIS PLAT.

3) *THE CITY OF FAYETTEVILLE STREAMSIDE PROTECTION ZONES AND THE TOP OF BANKS OF SPOUT SPRING BRANCH ARE SHOWN PER A TOPOGRAPHIC SURVEY PERFORMED BY BATES AND ASSOCIATES. FOR MORE INFORMATION ON DEVELOPMENT REGULATIONS IN THE STREAMSIDE PROTECTION ZONE, NO GRADING, FILL, OR IMPERVIOUS SURFACES PERMITTED WITHIN STREAM SIDE PROTECTION ZONE WITHOUT WRITTEN APPROVAL FROM THE CITY ENGINEER.

4) STREAMSIDE ZONES ARE ESTIMATES BASED ON GIS MAPPING. FIELD DETERMINATION OF THESE ZONES MUST BE PERFORMED DURING PERMIT PROCESS.

5) FOR RECORD BEARINGS AND DISTANCES, REFER TO THE FILED PROPERTY LINE ADJUSTMENT/TRACT SPLIT SURVEY ON THIS PROPERTY FILED IN BOOK 2026SP AT PAGE 186.

FLOOD CERTIFICATION:
A PORTION OF THIS PROPERTY IS LOCATED WITHIN FLOOD ZONE "A" OR "AE" AS DETERMINED BY THE NATIONAL FLOOD INSURANCE PROGRAM FLOOD INSURANCE RATE MAP FOR WASHINGTON COUNTY, ARKANSAS. (FIRM PANEL 0051J/0217G. DATED 01/25/2024)

LINE TABLE

LINE	BEARING	DISTANCE
L1	N 20°33'44" W	1.95'
L2	N 12°02'35" W	10.84'

CERTIFICATE OF AUTHORIZATION
BATES & ASSOCIATES, INC.
#335
ARKANSAS ENGINEER

0' 20' 40' 60'
GRAPHIC SCALE (IN FEET)
1 Inch = 20ft.

I HEREBY CERTIFY THIS TO BE TRUE AND CORRECT TO THE BEST OF MY KNOWLEDGE AND BELIEF ON THIS THE 22ND DAY OF OCTOBER, 2025.

REGISTERED
STATE OF ARKANSAS
NO. 16421
PROFESSIONAL LAND SURVEYOR
SIGNATURE
DERRICK L. THOMAS
DRAFT

DATE: 3/24/26

IF THE SIGNATURE ON THIS SEAL IS NOT AN ORIGINAL AND NOT BLUE IN COLOR THEN IT SHOULD BE ASSUMED THAT THIS PLAT MAY HAVE BEEN ALTERED. THE ABOVE CERTIFICATION SHALL NOT APPLY TO ANY COPY THAT DOES NOT BEAR AN ORIGINAL SEAL AND SIGNATURE.

VICINITY MAP

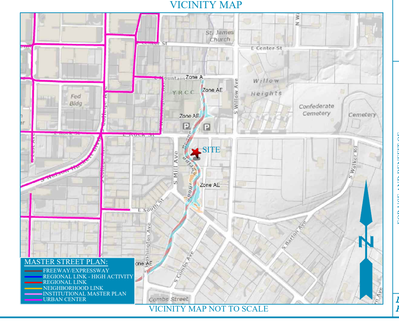

VICINITY MAP NOT TO SCALE

RECORDING NUMBER/DATE

CENTERLINE OF CREEK
TOP OF CREEK BANK
STREAMSIDE ZONE
MANAGEMENT ZONE
UTILITY EASEMENT
BUILDING SETBACK

BOUNDARY LINE (MEASURED)
BOUNDARY LINE (EXISTING)
PARTY LINE / TIE LINE
LOT LINE
CENTERLINE OF ROAD
RIGHT-OF-WAY
OVERHEAD POWER LINE
SEWER LINE
SEWER SERVICE LINE
WATER LINE

SEWER POLE
SANITARY SEWER MH
GU LAND OWNER

FOUND 5/8" REBAR
SET 12" REBAR
FOUND AXLE
SET AXLE
FOUND IRON STAKE
SET 1/2" REBAR CAP
COMPUTED POINT

LEGEND:
THESE STANDARD SYMBOLS WILL BE FOUND IN THE DRAWING.

BATES
Engineers · Surveyors
7320 S Viewcrest Ridge Dr · Fayetteville, Arkansas 72704 · 479.443.3150

This survey was conducted for the purpose of locating visible corners, fences and/or improvements. This survey is not to be used to establish property boundaries. Bates & Associates, Inc. assumes no responsibility for any unauthorized use of this survey. Bates & Associates, Inc. expressly rejects the creation of Express & Associates, Inc. Surveyor has made no investigation or independent search for easements of record, encumbrances, restrictions, ownership title evidence, or any other facts which a complete and accurate title search may disclose. Any deeds, easements, or rights-of-way shown hereon are based on record information provided by others. Bates & Associates, Inc. expressly rejects the creation of Express & Associates, Inc. of the possibility of flooding.

FOR USE AND BENEFIT OF:
TOMMIE DAVIS

ADDRESS:
106 N. WILLOW AVE
FAYETTEVILLE, ARKANSAS
DATE: 08/14/25
SCALE: 1"=20'

SURVEYED:	CW
DRAFTED:	AH
REVIEWED:	DT
COA #335	

LOCATION: TRACT 2
BLOCK 2
HENDRY'S ADDITION

DRAWING #21-459
PARKLAND SPLIT

LAND SALE AGREEMENT

This Land Sale Agreement is made and entered into by and between the **City of Fayetteville, Arkansas**, an Arkansas municipal corporation (hereinafter "City" or "Fayetteville") and **Tommie Flowers Davis, Trustee of the Tommie Flowers Davis Trust** (hereinafter “Flowers Davis” or “the Seller”).

TERMS AND CONDITIONS

1. *PURCHASE AND SALE*

Subject to the terms and conditions, mutual promises and covenants of this Agreement, the City of Fayetteville agrees to purchase, and Flowers Davis agrees to sell, the following described property (the “Property”):

A PART OF LOT 7 OF BLOCK 2 OF HENDRY'S ADDITION TO THE CITY OF FAYETTEVILLE, WASHINGTON COUNTY, ARKANSAS, BEING MORE PARTICULARLY DESCRIBED AS FOLLOWS, TO-WIT: BEGINNING AT AN EXISTING REBAR MARKING THE NORTHWEST CORNER OF SAID LOT 7 AND RUNNING THENCE S88°04'31"E 37.87', THENCE S21°12'07"W 78.35' TO AN EXISTING REBAR,THENCE N28°39'09"W 25.63' TO AN EXISTING REBAR, THENCE N03°03'53"E 51.91' TO THE POINT OF BEGINNING, CONTAINING 0.04 ACRES, MORE OR LESS. SUBJECT TO THAT PORTION IN EAST ROCK STREET MASTER STREET PLAN RIGHT-OF-WAY ON THE NORTH SIDE OF HEREIN DESCRIBED TRACT AND ALSO SUBJECT TO ALL OTHER EASEMENTS AND RIGHTS-OF-WAY OF RECORD.

The Property is labeled Tract 3 on the Tract Split survey attached hereto as Exhibit A.

2. *PURCHASE PRICE*

Subject to the terms and conditions, mutual promises and covenants of this Agreement, the City agrees to purchase the Property for **Fifty Two Thousand Five Hundred and no/100 dollars ($52,500.00)** to be paid to the Seller by the City on or before the Closing Date.

3. CONTINGENCIES

The Parties agree that this sale and all the Agreements set forth herein are subject to and contingent upon approval by the Fayetteville City Council and subsequent execution hereof by the Mayor. The Parties agree that this sale shall be contingent upon the property being vacant of all tenants at the time this Agreement is signed by the Seller and Seller is responsible for maintaining that vacancy until closing.

4. *CLOSING DATE AND PLACE*

Closing shall occur within sixty (60) days of approval by the Fayetteville City Council. The Closing shall occur at 113 West Mountain Street, Fayetteville, Arkansas in a room supplied by the City of Fayetteville or at another location agreed upon by the parties. The Closing Date may be extended upon the mutual agreement of the parties.

5. DATE OF POSSESSION

Possession of the Property shall be delivered to the City of Fayetteville on the Closing Date free of any tenancies or other third-party possessory rights.

6. *TITLE INSURANCE*

The Seller shall order a title commitment on the Property, as soon as practicable following the full execution of this Agreement, through Bronson Abstract Company. If the report on title, binder or commitment discloses any defects in title (other than liens or encumbrances of a definite or ascertainable amount which may be paid at closing), the Seller shall have thirty (30) days from the date of the City notice of such defects to make a good faith effort to cure such defects and to furnish a report showing the defects cured or removed. If such defects are not cured within thirty (30) days, the City may terminate this agreement or may, at its election, take title subject to any such defects. The cost of the title commitment and the cost of the owner's title policy shall be borne by the Seller.

7. *DEED, TAXES, CLOSING COSTS, AND OTHER DOCUMENTS*

On the Closing date, the Seller shall convey marketable and insurable title to the premises by general warranty deed, free and clear of all liens, restrictions, and encumbrances except easements and rights-of-way of record, or as provided in this Agreement.

Taxes and special assessments due on or before the date of closing shall be paid by Seller. Ad valorem taxes shall be prorated as of the date of closing. The City and the Seller shall equally share the cost of a reasonable closing fee imposed by the closing agent employed by parties provided however that the City shall be responsible for any revenue stamps resulting from this transaction and all recording fees for the deed and other documents that need to be filed.

8. *RISK OF LOSS*

Risk of loss as to the Property shall remain with the Seller until the Closing date.

9. *THE CITY OF FAYETTEVILLE'S DUE DILIGENCE*

The City may enter upon the Property to conduct any surveying, testing or inspection it deems necessary to ensure the Property will be appropriate and safe. If the City discovers any problems that would adversely impact its development and use of the Property for its facilities, the City shall notify the Seller who shall be granted sixty (60) days to remediate any problem. The Seller may also terminate this Agreement without penalty rather than remediating any problem or issue discovered by the City.

10. *NOTICES*

Notices required by this Agreement shall be in writing and shall be delivered to:

City of Fayetteville	**Tommie Flowers Davis Trust**
ATTN: Mayor's Office	ATTN: Tommie Flowers Davis, Trustee
113 W. Mountain Street	106 N. Willow Ave.
Fayetteville, AR 72701	Fayetteville, AR 72701

11. *AUTHORITY*

Each of the undersigned individuals represent and warrant that they are authorized to enter into this Agreement on behalf of themselves or their respective entities and that execution hereof will bind all parties to this Agreement.

12. *COUNTERPARTS*

This Agreement may be executed in two or more counterparts, each of which shall be deemed an original, but all of which taken together shall constitute one and the same agreement.

13. *FACSIMILE*

For purposes of executing this Agreement, a scanned or facsimile signature shall be as effective an as actual signature.

14. *APPLICABLE LAW*

This Agreement shall be construed and enforced in accordance with the laws of the State of Arkansas with venue in Washington County, Arkansas.

15. *SURVIVAL*

The representations, warranties, and agreements of the parties contained herein shall survive the closing date.

16. *NO WAIVERS*

The waiver by either party hereto of any condition or the breach of any term, covenant or conditions herein contained shall not be· deemed to be a waiver of any other condition or of any subsequent breach of the same or of any other term, covenant or condition herein contained.

17. *TIME OF ESSENCE*

Time is of the essence in this Agreement.

18. *INVALIDITY*

If for any reason any term or provision of this Agreement shall be declared void and unenforceable by any court of law or equity, it shall only affect such term or provision of this Agreement and the balance of this Agreement shall remain in full force and effect and shall be binding upon the parties hereto.

19. *COMPLETE AGREEMENT*

All understandings and agreements heretofore existing between the parties are merged into this Agreement that alone fully and completely expresses their agreement. This Agreement may be changed only in writing signed by all the parties hereto and shall apply to and bind the successors and assigns of each of the parties hereto and shall not merge with the deed delivered to the City at closing.

IN AGREEMENT WITH ALL OF THE TERMS AND CONDITIONS of this Land Sale Agreement and after being properly authorized by the Fayetteville City Council, the Mayor and City-Clerk Treasurer of the City of Fayetteville, Arkansas, Purchaser, sign their names below:

CITY OF FAYETTEVILLE, ARKANSAS

By: _____
Molly Rawn, Mayor

Date: _____

ATTEST:

By: _____
Kara Paxton
City Clerk Treasurer

IN AGREEMENT WITH ALL OF THE TERMS AND CONDITIONS of this Land Sale Agreement, Seller signs below:

TOMMIE FLOWERS DAVIS, TRUSTEE
of the Tommie Flowers Davis Trust

By: _____
Tommie Flowers Davis, Trustee

Date: 3/29/26

WITNESS:

By: _____
George Flowers

TRACT SPLIT

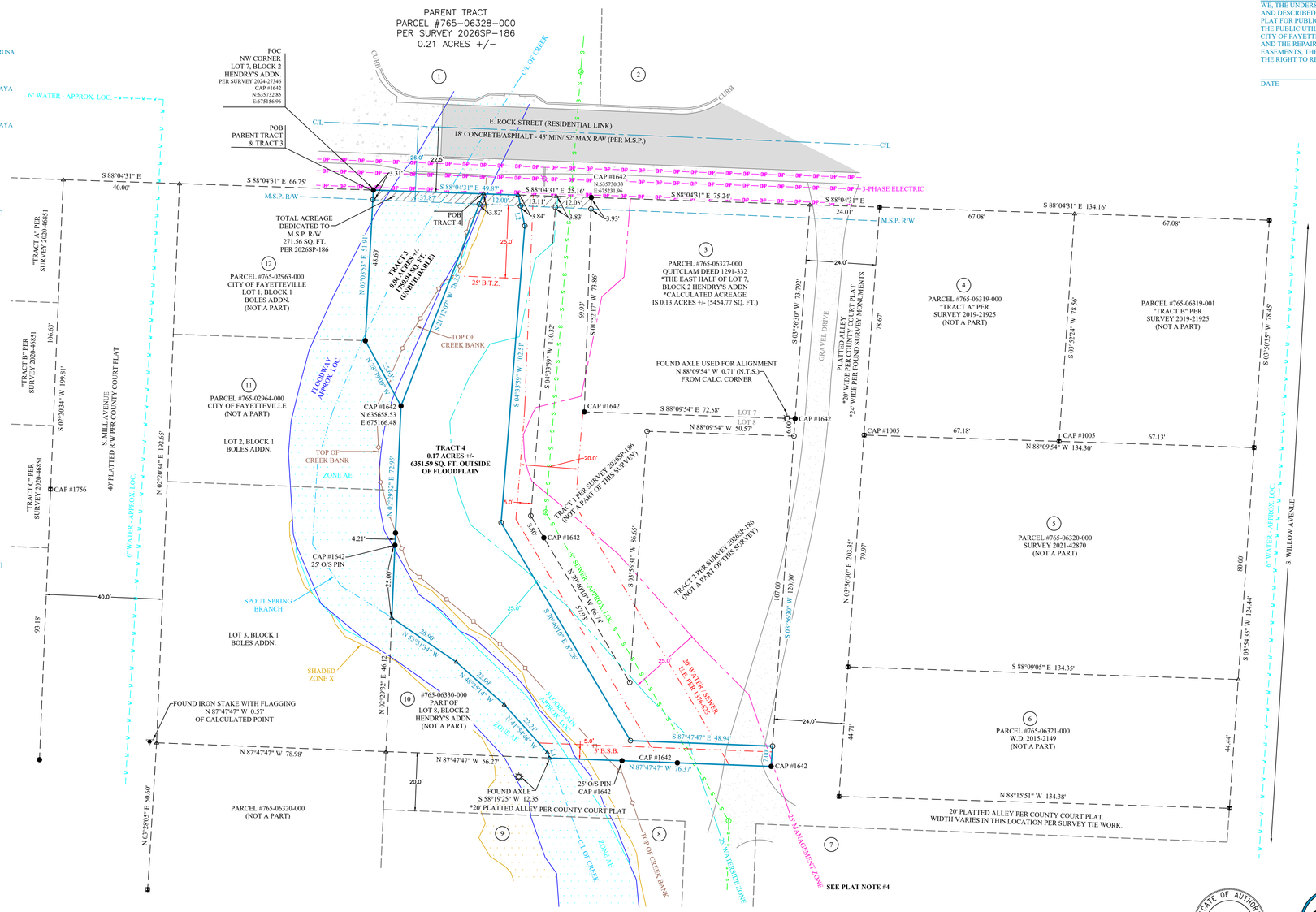

FAYETTEVILLE CERTIFICATE OF OWNERSHIP & DEDICATION:
WE, THE UNDERSIGNED OWNERS, REPRESENTING ONE HUNDRED PERCENT (100%) OWNERSHIP OF THE REAL ESTATE SHOWN AND DESCRIBED HEREIN, DO HEREBY DEDICATE FOR PUBLIC OWNERSHIP, ALL STREETS AND ALLEYS AS SHOWN ON THIS PLAT FOR PUBLIC BENEFIT AS PRESCRIBED BY LAW. THE OWNERS ALSO DEDICATE TO THE CITY OF FAYETTEVILLE AND TO THE PUBLIC UTILITY COMPANIES (INCLUDING ANY CABLE TELEVISION COMPANY HOLDING A FRANCHISE GRANTED BY THE CITY OF FAYETTEVILLE) THE EASEMENTS AS SHOWN ON THIS PLAT FOR THE PURPOSE OF INSTALLATION OF NEW FACILITIES AND THE REPAIR OF EXISTING FACILITIES. ALSO ESTABLISHED HEREBY IS THE RIGHT OF INGRESS AND EGRESS TO SAID EASEMENTS, THE RIGHT TO PROHIBIT THE ERECTION OF BUILDINGS, STRUCTURES, OR FENCES WITHIN SAID EASEMENTS, AND THE RIGHT TO REMOVE OR TRIM TREES WITHIN SAID EASEMENTS.

DATE

TOMMIE JO FLOWERS-DAVIS - TRUSTEE

PROPERTY OWNERS:
DAVIS, TOMMIE FLOWERS TRUST
106 N WILLOW AVE
FAYETTEVILLE, AR 72701
479-442-9350
(BOTH PARCELS)

PLAT PAGE INDEX:
524

CERTIFICATE OF SURVEYING ACCURACY:
I HEREBY CERTIFY THAT THE PLAN SHOWN AND DESCRIBED HEREON IS A TRUE AND CORRECT SURVEY AND THAT THE MONUMENTS HAVE BEEN PLACED AS STATED HEREON AS REQUIRED BY THE SUBDIVISION REGULATIONS OF THE CITY OF FAYETTEVILLE, ARKANSAS.

DATE OF EXECUTION: _____

SIGNED: _____
REGISTERED LAND SURVEYOR
NO. 1642
STATE OF ARKANSAS

REFERENCE DOCUMENTS:
1) PLAT OF SURVEY FILED IN BOOK 2020 AT PAGE 46851
2) PLAT OF SURVEY FILED IN BOOK 2015 AT PAGE 8177
3) PLAT OF SURVEY FILED IN BOOK 2019 AT PAGE 21925
4) PLAT OF SURVEY FILED IN BOOK 2021 AT PAGE 43870
5) PLAT OF SURVEY FILED IN BOOK 2004 AT PAGE 387
6) FINAL PLAT OF COUNTY COURT ADDITION FILED IN BOOK 4 AT PAGE 13 & BOOK 5 AT PAGE 13
7) WARRANTY DEED FILED IN BOOK 94 AT PAGE 50911
8) WARRANTY DEED FILED IN BOOK 2019 AT PAGE 2323
9) QUITCLAIM DEED FILED IN BOOK 94 AT PAGE 26793
10) WARRANTY DEED FILED IN BOOK 2016 AT PAGE 353
11) QUITCLAIM DEED FILED IN BOOK 1291 AT PAGE 332
12) PLAT OF SURVEY PREPARED BY BATES & ASSOCIATES FOR TOMMIE FLOWERS-DAVIS, DATED; 02/09/22, PROJECT #21-459
13) QUITCLAIM DEED FILED IN BOOK 2022 AT PAGE 35132
14) PLAT OF SURVEY FILED IN BOOK 2024 AT PAGE 27346
15) CORRECTION QUITCLAIM DEED FILED IN BOOK 2025 AT PAGE 10956
16) PLAT OF SURVEY FILED IN BOOK 2026SP AT PAGE 186.

PLAT NOTE:
1) SOME FEATURES AND/OR SYMBOLS ON THIS PLAT MAY BE SHOWN OUT OF SCALE FOR VISUAL CLARITY.

2) THE LOCATION OF UTILITIES SHOWN HEREON ARE FROM OBSERVED EVIDENCE OF ABOVE GROUND APPURTENANCES, GIS, AND/OR UTILITY MAPS PROVIDED BY LOCAL UTILITY COMPANIES. NOT ALL UTILITY COMPANIES MAY HAVE RESPONDED TO OUR REQUEST FOR MAPS AND/OR INFORMATION. ALL UTILITY LINES APPEARING ON THIS PLAT, AS WELL AS THOSE THAT MAY EXIST UNDERGROUND NEED TO BE VERIFIED PRIOR TO DOING ANY TYPE OF EXCAVATION OR DESIGN. SOME UTILITY LINES MAY ALSO EXIST THAT WERE NOT SHOWN ON THIS PLAT.

3) *THE CITY OF FAYETTEVILLE STREAMSIDE PROTECTION ZONES AND THE TOP OF BANKS OF SPOUT SPRING BRANCH ARE SHOWN PER A TOPOGRAPHIC SURVEY PERFORMED BY BATES AND ASSOCIATES. FOR MORE INFORMATION ON DEVELOPMENT REGULATIONS IN THE STREAMSIDE PROTECTION. NO GRADING, FILL, OR IMPERVIOUS SURFACES PERMITTED WITHIN STREAM SIDE PROTECTION ZONE WITHOUT WRITTEN APPROVAL FROM THE CITY ENGINEER.

4) STREAMSIDE ZONES ARE ESTIMATES BASED ON GIS MAPPING. FIELD DETERMINATION OF THESE ZONES MUST BE PERFORMED DURING PERMIT PROCESS.

5) FOR RECORD BEARINGS AND DISTANCES, REFER TO THE FILED PROPERTY LINE ADJUSTMENT/TRACT SPLIT SURVEY ON THIS PROPERTY FILED IN BOOK 2026SP AT PAGE 186.

FLOOD CERTIFICATION:
A PORTION OF THIS PROPERTY IS LOCATED WITHIN FLOOD ZONE "A" OR "AE" AS DETERMINED BY THE NATIONAL FLOOD INSURANCE PROGRAM FLOOD INSURANCE RATE MAP FOR WASHINGTON COUNTY, ARKANSAS. (FIRM PANEL #05143C0217G. DATED 01/25/2024)

LINE TABLE

LINE	BEARING	DISTANCE
L1	N 20°33'44" W	1.95'
L2	N 12°02'15" W	10.84'

ADJACENT LAND OWNERS

1) CITY OF FAYETTEVILLE
113 W MOUNTAIN ST
FAYETTEVILLE, AR 72701
PARCEL #765-06387-000
ZONED: P-1
2) CITY OF FAYETTEVILLE
113 W MOUNTAIN ST
FAYETTEVILLE, AR 72701
PARCEL #765-12808-000
ZONED: P-1
3) MAYFIELD, AMY
6184 BARBERRY HOLW
COLUMBUS, OH 43213-3305
PARCEL # 765-06327-000
ZONED: UN
4) CALDWELL, AARON RICHARD & MEGAN-ROSA
4261 NE MEADOWCREEK BLVD APT 101
FAYETTEVILLE, AR 72703
PARCEL #765-06319-000
ZONED: UN
5) SIEMEK, KONRAD B; BATES, WESLEY & MAYA
608 S RAY AVE
FAYETTEVILLE, AR 72701
PARCEL #765-06320-000
ZONED: UN
6) SIEMEK, KONRAD B; BATES, WESLEY & MAYA
608 S RAY AVE
FAYETTEVILLE, AR 72701
PARCEL #765-06321-000
ZONED: UN
7) TATTER, VLADA P & BERRY, ATTILA
700 E WINBAUGH LN
FAYETTEVILLE, AR 72703
PARCEL #765-06322-000
ZONED: RMF-24
8) UNKNOWN
ZONED: RMF-24
9) STEVENS PROPERTIES FAYETTEVILLE LLC
429 E SUTTON ST
FAYETTEVILLE, AR 72701
PARCEL #765-06333-000
ZONED: RMF-24
10) CITY OF FAYETTEVILLE
113 W MOUNTAIN ST
FAYETTEVILLE, AR 72701
PARCEL #765-06330-000
ZONED: RMF-24
11) CITY OF FAYETTEVILLE
113 W MOUNTAIN ST
FAYETTEVILLE, AR 72701
PARCEL #765-02964-000
ZONED: P-1
12) CITY OF FAYETTEVILLE
113 W MOUNTAIN ST
FAYETTEVILLE, AR 72701
PARCEL #765-02963-000
ZONED: P-1
13) TOMMIE FLOWERS DAVIS TRUST
106 N WILLOW AVE
FAYETTEVILLE, AR 72701
TRACTS 1 & 2 PER SURVEY 2026SP-186
ZONED: UN

LAST SITE VISIT:
OCTOBER 22, 2025

BASIS OF BEARING:
GPS OBSERVATION - AR NORTH ZONE
NAD83(2011) HORIZONTAL DATUM

PROPERTY ZONED:
UN (URBAN NEIGHBORHOOD)
- ENDURING GREEN NETWORK
- STREAMSIDE PROTECTION ZONE

BUILDING SETBACKS:
FRONT 25ft (BUILD-TO-ZONE)
SIDE 00ft
REAR 05ft
REAR 12ft (FROM THE C/L OF AN ALLEY)

SURVEY DESCRIPTIONS:

PARENT TRACT (ADJUSTED PARCEL #765-06328-000 PER 2026SP-186):
A PART OF LOTS 7 AND 8 OF BLOCK 2 OF HENDRY'S ADDITION TO THE CITY OF FAYETTEVILLE, WASHINGTON COUNTY, ARKANSAS, BEING MORE PARTICULARLY DESCRIBED AS FOLLOWS, TO-WIT: BEGINNING AT AN EXISTING REBAR MARKING THE NORTHWEST CORNER OF SAID LOT 7 AND RUNNING THENCE S88°04'31"E 49.87', THENCE S12°02'35"E 10.84', THENCE S04°33'59"W 102.51', THENCE S88°47'47"E 48.94', THENCE S03°56'30"W 7.00' TO AN EXISTING REBAR, THENCE N87°47'47"W 76.37' TO THE CENTERLINE OF SPOUT SPRING BRANCH, THENCE ALONG SAID CENTERLINE THE FOLLOWING: N20°33'44"W 1.95', N41°54'48"W 22.21', N48°25'14"W 22.09', N55°31'34"W 26.90', THENCE LEAVING SAID CENTERLINE N02°29'32"E 72.95' TO AN EXISTING REBAR, THENCE N28°39'09"W 25.63' TO AN EXISTING REBAR, THENCE N03°03'53"E 51.91' TO THE POINT OF BEGINNING, CONTAINING 0.21 ACRES, MORE OR LESS, SUBJECT TO THAT PORTION IN EAST ROCK STREET MASTER STREET PLAN RIGHT-OF-WAY ON THE NORTH SIDE OF HEREIN DESCRIBED TRACT AND ALSO SUBJECT TO ALL OTHER EASEMENTS AND RIGHTS-OF-WAY OF RECORD.

TRACT 3:
A PART OF LOT 7 OF BLOCK 2 OF HENDRY'S ADDITION TO THE CITY OF FAYETTEVILLE, WASHINGTON COUNTY, ARKANSAS, BEING MORE PARTICULARLY DESCRIBED AS FOLLOWS, TO-WIT: BEGINNING AT AN EXISTING REBAR MARKING THE NORTHWEST CORNER OF SAID LOT 7 AND RUNNING THENCE S88°04'31"E 37.87', THENCE S21°12'07"W 78.35' TO AN EXISTING REBAR, THENCE N03°03'53"E 51.91' TO THE POINT OF BEGINNING, CONTAINING 0.04 ACRES, MORE OR LESS, SUBJECT TO THAT PORTION IN EAST ROCK STREET MASTER STREET PLAN RIGHT-OF-WAY ON THE NORTH SIDE OF HEREIN DESCRIBED TRACT AND ALSO SUBJECT TO ALL OTHER EASEMENTS AND RIGHTS-OF-WAY OF RECORD.

TRACT 4:
A PART OF LOTS 7 AND 8 OF BLOCK 2 OF HENDRY'S ADDITION TO THE CITY OF FAYETTEVILLE, WASHINGTON COUNTY, ARKANSAS, BEING MORE PARTICULARLY DESCRIBED AS FOLLOWS, TO-WIT: BEGINNING AT A POINT WHICH IS S88°04'31"E 37.87' FROM AN EXISTING REBAR MARKING THE NORTHWEST CORNER OF SAID LOT 7 AND RUNNING THENCE S88°04'31"E 12.00', THENCE S12°02'35"E 10.84', THENCE S04°33'59"W 102.51', THENCE S39°40'10"E 87.26', THENCE S87°47'47"E 48.94', THENCE S03°56'30"W 7.00' TO AN EXISTING REBAR, THENCE N87°47'47"W 76.37' TO THE CENTERLINE OF SPOUT SPRING BRANCH, THENCE ALONG SAID CENTERLINE THE FOLLOWING: N20°33'44"W 1.95', N41°54'48"W 22.21', N48°25'14"W 22.09', N55°31'34"W 26.90', THENCE LEAVING SAID CENTERLINE N02°29'32"E 72.95' TO AN EXISTING REBAR, THENCE N21°12'07"E 78.35' TO THE POINT OF BEGINNING, CONTAINING 0.17 ACRES, MORE OR LESS. SUBJECT TO THAT PORTION IN EAST ROCK STREET MASTER STREET PLAN RIGHT-OF-WAY ON THE NORTH SIDE OF HEREIN DESCRIBED TRACT AND ALSO SUBJECT TO ALL OTHER EASEMENTS AND RIGHTS-OF-WAY OF RECORD.

CERTIFICATE OF AUTHORIZATION
BATES & ASSOCIATES, INC.
#335
ARKANSAS ENGINEER

0' 20' 40' 60'
GRAPHIC SCALE (IN FEET)
1 Inch = 20ft.

I HEREBY CERTIFY THIS TO BE TRUE AND CORRECT TO THE BEST OF MY KNOWLEDGE AND BELIEF ON THIS THE 22ND DAY OF OCTOBER, 2025.

REGISTERED
STATE OF
ARKANSAS
NO.
1642
PROFESSIONAL LAND SURVEYOR
SIGNATURE
DERRICK L. THOMAS
DRAFT

DATE: 3/24/26

IF THE SIGNATURE ON THIS SEAL IS NOT AN ORIGINAL AND NOT BLUE IN COLOR THEN IT SHOULD BE ASSUMED THAT THIS PLAT MAY HAVE BEEN ALTERED. THE ABOVE CERTIFICATION SHALL NOT APPLY TO ANY COPY THAT DOES NOT BEAR AN ORIGINAL SEAL AND SIGNATURE.

VICINITY MAP

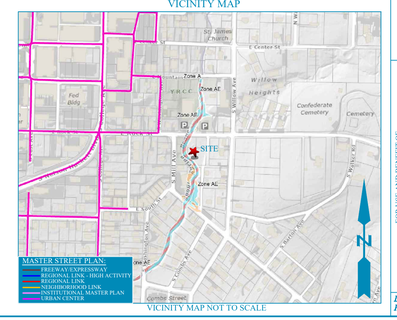

VICINITY MAP NOT TO SCALE

RECORDING NUMBER/DATE

CENTERLINE OF CREEK
TOP OF CREEK BANK
100' STREAMSIDE MANAGEMENT ZONE
UTILITY EASEMENT
BUILDING SETBACK

BOUNDARY LINE (MEASURED)
BOUNDARY LINE (EXISTING)
PARTY LINE / TIE LINE
GAS LINE
CENTERLINE OF ROAD
RIGHT-OF-WAY
OVERHEAD POWER LINE
SEWER LINE
SEWER SERVICE LINE
WATER LINE

SEWER POLE
SANITARY SEWER MH
GH LAND OWNER

FOUND 5/8" REBAR
SET 1/2" REBAR
FOUND AXLE
SET 1/2" REBAR CAP
SET 5/8" REBAR CAP
COMPUTED POINT

LEGEND:
THESE STANDARD SYMBOLS WILL BE FOUND IN THE DRAWING.

BATES
Engineers - Surveyors
7320 S Stewart Ridge Dr - Fayetteville, Arkansas 72704 - 479.443.3150

This work is protected by the copyright laws of the United States and other countries. Unauthorized use, including but not limited to alteration, modification, reproduction, distribution, publication, preparation of derivative works, creation of counterfeits, or any other use which is unauthorized and contrary to the rights granted by law, is prohibited and may result in civil and criminal penalties. Violators may be prosecuted to the fullest extent possible. Bates & Associates, Inc. disclaims any responsibility for unauthorized use. By using this work, you agree to indemnify, defend, and hold harmless Bates & Associates, Inc. and its officers, employees, and agents from any claims, damages, or liabilities arising from your unauthorized use. Nothing in this boilerplate shall be construed as limiting or waiving any rights that Bates & Associates, Inc. may have under applicable law, including but not limited to the right to seek injunctive relief, monetary damages, and attorney's fees. Use of this work constitutes your acceptance of these terms. If you do not agree to these terms, you must immediately cease any use of this work. The unauthorized use of this work may cause irreparable harm to Bates & Associates, Inc., for which monetary damages may be inadequate. This boilerplate does not limit or waive any rights that Bates & Associates, Inc. may have under law or equity. The prevailing party in any dispute related to this boilerplate shall be entitled to recover its reasonable attorney's fees and costs from the non-prevailing party. This boilerplate is governed by the laws of the State of Arkansas, and any disputes shall be resolved in the courts of Benton or Washington County, Arkansas. This boilerplate supersedes any prior boilerplate or boilerplate-like statements made by Bates & Associates, Inc. and represents the entire agreement between Bates & Associates, Inc. and any party regarding the boilerplate. If any provision of this boilerplate is found to be unenforceable, the remaining provisions shall remain in full force and effect. The boilerplate does not create a fiduciary relationship between Bates & Associates, Inc. and any party, nor does it impose any fiduciary duties on Bates & Associates, Inc. The boilerplate does not constitute a contract for services, nor does it obligate Bates & Associates, Inc. to perform any specific work or provide any specific deliverables. Bates & Associates, Inc. makes no warranties, express or implied, regarding the boilerplate, including but not limited to warranties of merchantability, fitness for a particular purpose, or non-infringement. Bates & Associates, Inc. disclaims any liability for any damages, losses, or expenses arising from the boilerplate, including but not limited to direct, indirect, incidental, consequential, or punitive damages. Bates & Associates, Inc. shall not be liable for any errors or omissions in the boilerplate, or for any delays or failures in performance. The boilerplate does not create any third-party beneficiaries, and no third party may rely on the boilerplate without the express written consent of Bates & Associates, Inc. Any such reliance is at the third party's own risk. Bates & Associates, Inc. assumes no responsibility for any third party's use of the boilerplate, and the third party shall indemnify, defend, and hold harmless Bates & Associates, Inc. from any claims, damages, or liabilities arising from such use. The boilerplate may be updated or modified by Bates & Associates, Inc. at any time without notice. It is the responsibility of the user to review the boilerplate periodically for changes. The boilerplate supersedes any prior boilerplate or boilerplate-like statements made by Bates & Associates, Inc. and represents the entire agreement between Bates & Associates, Inc. and any party regarding the boilerplate. If any provision of this boilerplate is found to be unenforceable, the remaining provisions shall remain in full force and effect. The boilerplate does not create a fiduciary relationship between Bates & Associates, Inc. and any party, nor does it impose any fiduciary duties on Bates & Associates, Inc. The boilerplate does not constitute a contract for services, nor does it obligate Bates & Associates, Inc. to perform any specific work or provide any specific deliverables. Bates & Associates, Inc. makes no warranties, express or implied, regarding the boilerplate, including but not limited to warranties of merchantability, fitness for a particular purpose, or non-infringement. Bates & Associates, Inc. disclaims any liability for any damages, losses, or expenses arising from the boilerplate, including but not limited to direct, indirect, incidental, consequential, or punitive damages. Bates & Associates, Inc. shall not be liable for any errors or omissions in the boilerplate, or for any delays or failures in performance. The boilerplate does not create any third-party beneficiaries, and no third party may rely on the boilerplate without the express written consent of Bates & Associates, Inc. Any such reliance is at the third party's own risk. Bates & Associates, Inc. assumes no responsibility for any third party's use of the boilerplate, and the third party shall indemnify, defend, and hold harmless Bates & Associates, Inc. from any claims, damages, or liabilities arising from such use. The boilerplate may be updated or modified by Bates & Associates, Inc. at any time without notice. It is the responsibility of the user to review the boilerplate periodically for changes.

FOR USE AND BENEFIT OF:
TOMMIE DAVIS

ADDRESS: 106 N. WILLOW AVE
FAYETTEVILLE, ARKANSAS
DATE: 08/14/25 SCALE: 1"=20'

SURVEYED:	CW
DRAFTED:	AH
REVIEWED:	DT
COA #335	

LOCATION: PART OF LOT 7 & 8, BLOCK 2 HENDRY'S ADDITION

DRAWING #21-459
PARKLAND SPLIT

CITY OF FAYETTEVILLE ARKANSAS

CITY COUNCIL MEMO
2026-1945

MEETING OF JUNE 16, 2026

TO: Mayor Rawn and City Council

THROUGH:

FROM:

SUBJECT: **Private Club Application for Motelier Fayetteville LLC (Oxbow)**

RECOMMENDATION:
Staff recommends approval of the private club application for Motelier Fayetteville LLC (Oxbow), as the applicant meets all statutory requirements.

BACKGROUND:
Arkansas statute 3-9-222 requires the City Council to approve this application by ordinance before the establishment may seek a private club permit from the Arkansas Alcohol Beverage Control Board and operate in the City of Fayetteville. City Council approval is a prerequisite step in the state permitting process.

DISCUSSION:
Charles Mackey submitted a City of Fayetteville private club application for Motelier Fayetteville LLC (Oxbow). Mr. Mackey is a developer and is constructing a boutique motel on the property where the private club is proposed. Staff anticipates continued cooperation with regulatory requirements and public safety expectations under the requested private club permit. Approval of this application is consistent with prior Council actions regarding similar situated establishments.

BUDGET/STAFF IMPACT:
This item has no budget or staff impact.

ATTACHMENTS: 3. Staff Review Form, 4. SRM - Oxbow Private Club, 5. Oxbow Private Club Application

113 West Mountain Street
Fayetteville, AR 72701
(479) 575-8323

File #: 2026-1945

AN ORDINANCE TO APPROVE THE APPLICATION OF MOTELIER FAYETTEVILLE, LLC, D/B/A OXBOW FOR A PERMIT TO OPERATE THE OXBOW AS A PRIVATE CLUB IN THE CITY OF FAYETTEVILLE AT 2980 NORTH COLLEGE AVENUE

WHEREAS, Act 1112 of 2017, which amended the permitting procedure set forth in Ark. Code Ann. § 3-9-222 for private clubs in the State of Arkansas, requires the City Council to approve "by ordinance an application for a permit to operate as a private club" before the applicant can submit the application to the state Alcoholic Beverage Control Division.

NOW, THEREFORE, BE IT ORDAINED BY THE CITY COUNCIL OF THE CITY OF FAYETTEVILLE, ARKANSAS:

Section 1: That the City Council of the City of Fayetteville, Arkansas hereby approves the application of Motelier Fayetteville, LLC, d/b/a Oxbow for a permit to operate the Oxbow as a private club in the City of Fayetteville at 2980 North College Avenue.

City of Fayetteville Staff Review Form

2026-1945

Item ID

6/16/2026

City Council Meeting Date - Agenda Item Only
N/A for Non-Agenda Item

Mike Reynolds	5/27/2026	POLICE (200)
Submitted By	**Submitted Date**	**Division / Department**

Action Recommendation:

Staff recommends approval of the private club application for Motelier Fayetteville LLC (Oxbow), as the applicant meets all statutory requirements.

Budget Impact:

Account Number	Fund
Project Number	Project Title

Budgeted Item?	No	Total Amended Budget	$ -
		Expenses (Actual+Encum)	$ -
		Available Budget	$ -
Does item have a direct cost?	No	Item Cost	$ -
Is a Budget Amendment attached?	No	Budget Amendment	$ -
		Remaining Budget	$ -

Purchase Order Number: _____

Change Order Number: _____

Original Contract Number: _____

Previous Ordinance or Resolution # _____

Approval Date: _____

Comments:

CITY OF
FAYETTEVILLE
ARKANSAS

CITY COUNCIL MEMO

MEETING OF JUNE 16, 2026

TO: Mayor and City Council

FROM: Mike Reynolds, Chief of Police

DATE: May 22, 2026

SUBJECT: **Private Club Application for Motelier Fayetteville LLC (Oxbow)**

RECOMMENDATION:

Staff recommends approval of the private club application for Motelier Fayetteville LLC (Oxbow), as the applicant meets all statutory requirements.

BACKGROUND:

Arkansas statute 3-9-222 requires the City Council to approve this application by ordinance before the establishment may seek a private club permit from the Arkansas Alcohol Beverage Control Board and operate in the City of Fayetteville. City Council approval is a prerequisite step in the state permitting process.

DISCUSSION:

Charles Mackey submitted a City of Fayetteville private club application for Motelier Fayetteville LLC (Oxbow). Mr. Mackey is a developer and is constructing a boutique motel on the property where the private club is proposed. Staff anticipates continued cooperation with regulatory requirements and public safety expectations under the requested private club permit. Approval of this application is consistent with prior Council actions regarding similar situated establishments.

BUDGET/STAFF IMPACT:

This item has no budget or staff impact.

Attachments:

Private Club Application – Motelier Fayetteville LLC (Oxbow)
Arkansas Code § 3-9-222

CITY OF FAYETTEVILLE ARKANSAS

CITY COUNCIL MEMO
2026-1105

MEETING OF JUNE 16, 2026

TO: Mayor Rawn and City Council

THROUGH: Keith Macedo, Chief of Staff

FROM: Alison Jumper, Director of Parks, Natural Resources and Cultural Affairs

SUBJECT: **Conservation Ordinance for Properties Included in the Climate Pollution Reduction Grant**

RECOMMENDATION:
Staff recommends approval of an ordinance establishing conservation requirements until the year 2050 on properties associated with the Climate Pollution Reduction Grant.

BACKGROUND:
On July 22nd, 2024, the Environmental Protection Agency (EPA) announced that the Tri- Region Arkansas Coalition was selected for a $99,999,999 Climate Pollution Reduction Grant (CPRG) award for its "Energy and Environment Innovation for the Natural State" proposal. Northwest Arkansas is receiving approximately $36.25 million of the $99,999,999 million in CPRG funding awarded by the Environmental Protection Agency to the Arkansas Tri- Region Coalition to implement each region's Energy and Environment Innovation Priority Action Plan. The grant is aimed at reducing greenhouse gas emissions and carbon sequestration.

On November 19th, 2024, Resolution 279-24 authorized the City of Fayetteville to accept and enter into a sub-award grant agreement with the Arkansas Tri- Region Energy and Environment Innovation Coalition to utilize sub-awarded funds for EPA climate pollution reduction grant project implementation. Those projects include the following:

Northwest Arkansas Green Network Projects and Programs

Site/Project Name	Project Location	Partnering Agencies
River Commons Floodplain, Prairie, and Riparian Restoration and Trail Construction *	Fayetteville, AR	City of Fayetteville, Beaver Water District, Watershed Conservation Resource Center
Town Branch Corridor Stream and Riparian Restoration	Fayetteville, AR	City of Fayetteville, Watershed Conservation Resource Center
University of Arkansas Oak Knoll Wetland, Prairie, Forest, Stream, and Riparian Restoration*	Fayetteville, AR	University of Arkansas, Watershed Conservation Resource Center
University of Arkansas Oak Ridge Hillside Prairie and Forest Restoration and Trail Construction*	Fayetteville, AR	University of Arkansas, Watershed Conservation Resource Center
University of Arkansas AR Research & Tech Park Floodplain, Prairie, and Forest Restoration*	Fayetteville, AR	University of Arkansas, Watershed Conservation Resource Center

DISCUSSION:

The grant requires properties that are being restored to be protected and conserved until 2050 to maximize greenhouse gas reduction benefits included in the grant application. Staff worked with MetroPlan to draft a conservation ordinance that largely aligns with the Streamside Protection regulations, and also allows for recreational uses such as passive parks and trails, streambank restoration, invasive species removal, maintenance and other land management activities.

Prohibited uses include construction activities such as grading, dredging and filling; landfills, land clearing, parking lots, building footprints larger than 150 square feet and other development related activities. A full list of permitted and prohibited uses can be found in the proposed ordinance.

BUDGET/STAFF IMPACT:
None.

ATTACHMENTS: 3. Staff Review Form, 4. Conservation Ordinance, 5. Exhibit A - Properties, 6. Exhibit B - Conservation Ordinance

113 West Mountain Street
Fayetteville, AR 72701
(479) 575-8323

File #: 2026-1105

AN ORDINANCE TO PROVIDE FOR THE CONSERVATION AND PROTECTION OF CERTAIN CITY-OWNED REAL PROPERTY, TO ESTABLISH PERMITTED AND PROHIBITED USES; AND FOR OTHER PURPOSES.

WHEREAS, the City of Fayetteville (the "City") is the owner in fee simple of certain real property located within the municipal boundaries of the City, more particularly described in **Exhibit A** attached hereto and incorporated by reference (the "Property"); and

WHEREAS, the City has entered into a subrecipient agreement with Metroplan, and the Northwest Arkansas Regional Planning Commission, and the Watershed Conservation Resource Center for a United States Environmental Protection Agency (EPA) Climate Pollution Reduction Grant (CPRG) to implement a project for public land restoration, stream restoration, land protection, and trail construction; and

WHEREAS, the stipulations of the grant require the conservation of the project area until the year 2050, at minimum, to incur maximum greenhouse gas reduction benefits; and

WHEREAS, Arkansas Code Annotated § 14-54-101, and other applicable provisions of Arkansas law authorize municipalities to acquire, hold, manage, and regulate real property for public purposes, including parks, open space, and conservation; and

WHEREAS, the City Council desires to formally designate the Property for conservation purposes and to restrict its use accordingly to ensure long-term protection.

NOW, THEREFORE, BE IT ORDAINED BY THE CITY COUNCIL OF THE CITY OF FAYETTEVILLE, ARKANSAS:

Section 1: That the City Council of the City of Fayetteville, Arkansas hereby adopts the foregoing recitals as findings of fact. The purpose of this Ordinance is to conserve and protect the Restoration Area in its restored condition for the benefit of present and future residents, consistent with applicable Arkansas law and consistent with the provisions of the EPA Climate Pollution Reduction Grant.

Section 2: That the City Council of the City of Fayetteville, Arkansas hereby designates the Restoration Area described in Exhibit A as Conserved City Land. This designation shall run with the land unless amended or repealed by ordinance in accordance with Arkansas law. The designation as Conserved City Land means that the Property shall be subject to the regulations and conditions regarding permitted uses, prohibited uses, and compliance with applicable federal laws as shown in Exhibit B attached hereto.

Section 3: That the City Council of the City of Fayetteville, Arkansas hereby declares that this Ordinance may be amended or repealed only by a subsequent ordinance adopted by the City Council.

Any amendment or repeal prior to the year 2050 may result in penalties imposed by the EPA due to the violation of the stipulations of the Climate Pollution Reduction Grant (CPRG) and executed subrecipient agreement to conserve the land until the year 2050 to incur maximum greenhouse gas reduction benefits. These penalties could result in repayment of the full amount of subaward funding or as otherwise determined by EPA.

Section 4: That the City Council of the City of Fayetteville, Arkansas hereby declares that if any provision of this Ordinance is held invalid or unconstitutional, such invalidity shall not affect the other provisions, which shall remain in full force and effect.

City of Fayetteville Staff Review Form

2026-1105

Item ID

5/5/2026

City Council Meeting Date - Agenda Item Only
N/A for Non-Agenda Item

Alison Jumper	3/9/2026	PARKS & RECREATION (520)
Submitted By	**Submitted Date**	**Division / Department**

Action Recommendation:

Staff recommends approval of an ordinance establishing conservation requirements until the year 2050 on properties associated with the Climate Pollution Reduction Grant.

Budget Impact:

Account Number	Fund
Project Number	Project Title

Budgeted Item?	No	Total Amended Budget	$	-
		Expenses (Actual+Encum)	$	-
		Available Budget	$	-
Does item have a direct cost?	No	Item Cost	$	-
Is a Budget Amendment attached?	No	Budget Amendment	$	-
		Remaining Budget	$	-

Purchase Order Number:

Previous Ordinance or Resolution # 279-24

Change Order Number:

Approval Date: 11/19/2024

Original Contract Number:

Comments:

ORDINANCE _____

AN ORDINANCE TO PROVIDE FOR THE CONSERVATION AND PROTECTION OF CERTAIN CITY-OWNED REAL PROPERTY, TO ESTABLISH PERMITTED AND PROHIBITED USES; AND FOR OTHER PURPOSES.

WHEREAS, the City of Fayetteville (the "City") is the owner in fee simple of certain real property located within the municipal boundaries of the City, more particularly described in **Exhibit A** attached hereto and incorporated by reference (the "Property"); and

WHEREAS, the City has entered into a subrecipient agreement with Metroplan, and the Northwest Arkansas Regional Planning Commission, and the Watershed Conservation Resource Center for a United States Environmental Protection Agency (EPA) Climate Pollution Reduction Grant (CPRG) to implement a project for public land restoration, stream restoration, land protection, and trail construction; and

WHEREAS, the stipulations of the grant require the conservation of the project area until the year 2050, at minimum, to incur maximum greenhouse gas reduction benefits; and

WHEREAS, Arkansas Code Annotated § 14-54-101, and other applicable provisions of Arkansas law authorize municipalities to acquire, hold, manage, and regulate real property for public purposes, including parks, open space, and conservation; and

WHEREAS, the City Council desires to formally designate the Property for conservation purposes and to restrict its use accordingly to ensure long-term protection.

NOW, THEREFORE, BE IT ORDAINED BY THE CITY COUNCIL OF THE CITY OF FAYETTEVILLE, ARKANSAS:

Section 1: That the City Council of the City of Fayetteville, Arkansas hereby adopts the foregoing recitals as findings of fact. The purpose of this Ordinance is to conserve and protect the Restoration Area in its restored condition for the benefit of present and future residents, consistent with applicable Arkansas law and consistent with the provisions of the EPA Climate Pollution Reduction Grant.

Section 2: That the City Council of the City of Fayetteville, Arkansas hereby designates the Restoration Area described in Exhibit A as Conserved City Land. This designation shall run with the land unless amended or repealed by ordinance in accordance with Arkansas law. The designation as Conserved City Land means that the Property shall be subject to the regulations and conditions regarding permitted uses, prohibited uses, and compliance with applicable federal laws as shown in Exhibit B attached hereto.

Section 3: That the City Council of the City of Fayetteville, Arkansas hereby declares that this Ordinance may be amended or repealed only by a subsequent ordinance adopted by the City Council. Any amendment or repeal prior to the year 2050 may result in penalties imposed by the EPA due to the violation of the stipulations of the Climate Pollution Reduction Grant (CPRG) and executed subrecipient agreement to conserve the land until the year 2050 to incur maximum greenhouse gas reduction benefits. These penalties could result in repayment of the full amount of subaward funding or as otherwise determined by EPA.

Section 4: That the City Council of the City of Fayetteville, Arkansas hereby declares that if any provision of this Ordinance is held invalid or unconstitutional, such invalidity shall not affect the other provisions, which shall remain in full force and effect.

Exhibit A:

Legal Descriptions

Parcel 765-15145-001:
Part of the W 1/2 of the SE 1/4 of Section 22, Township 16 North Range 30 West, Washington County, Arkansas, more particularly described as follows: Commencing at the Southwest corner of the NW 1/4 of the SE 1/4 of said Section 22; Thence S 49°37'02" E 68.92 feet to the point of beginning, said point being on the proposed East right-of-way of South Morningside Drive; Thence along said proposed East right-of-way N 03°03'31" E 271.93 feet; Thence leaving said proposed East right-of-way S 86°49'28" E 267.94 feet; Thence S 74°17'22" E 1015.54 feet to the Northeast corner of the SW 1/4 of the SE 1/4; Thence along the East line thereof S 02°36'36" W 333.36 feet; Thence leaving said East line N 87°14'55" W 882.24 feet; Thence N 49°37'02" W 476.86 feet to the point of beginning, containing 12.37 acres, more or less.

Parcel 765-19970-000:
Part of the SW ¼ of the SW ¼ of Section 23 Township 16 Range 30 West, Washington County, Arkansas, more particularly described as follows: Commencing at the NW corner of the SW ¼ of the SW ¼ of said section 23, thence S 82°46’43” E 811.1 feet to the point of beginning, thence S 4°44’58” W 390.36 feet, thence S 82°46’43” E 551.13 feet, thence N 2°49’17” E 391.15 feet, thence N 82°46’43” W 537.96 feet to the point of beginning containing 4.88 acres, more or less.

Parcel 765-19969-000:
Part of the SW ¼ of the SW ¼ of Section 23 Township 16 Range 30 West, Washington County, Arkansas, more particularly described as follows: Commencing at the NW corner of the SW ¼ of the SW ¼ of said section 23; Thence S 82°46’43” E 273.14 feet to the point of beginning, thence S 7°13’19” W 365.01 feet, thence S 82°46’40” E 65.03 feet, thence right along a curve with a radius of 61.78 feet from the center of the cul-de-sac at South Leeper Drive with an arc length of 56.86 feet, thence S 82°46’43” E 441.04 feet, thence N 4°44’58” E 390.36 feet, thence N 82°46’43” E 537.96 feet to the point of beginning containing 4.83 acres, more or less.

Parcel 756-19971-000:
Part of the SW ¼ of the SW ¼ and part of the NW1/4 of the SW ¼ of Section 23 Township 16 Range 30 West, Washington County, Arkansas, more particularly described as follows: All property encompassed by the Western line of the SW ¼ of said Section 23, the Town Branch river on the Southern side, South Armstrong Avenue to the East, with the Northern boundary being described as follows: Commencing at the NE corner of the SW ¼ of the SW ¼ of said Section 23, thence N 11°02’02” W 132.37 feet to the beginning of the Northern boundary, thence N 88°32’55” W 1,295.53 feet to the end of the Northern boundary, containing 9.24 acres, more or less.

Parcel 756-19972-000:
Part of the SW ¼ of the SW ¼ of Section 23 Township 16 Range 30 West, Washington County, Arkansas, more particularly described as follows: All property encompassed by the Southern boundary described as follows: Commencing at the NW corner of the SW ¼ of the SW ¼ of said Section 23, thence S 3°01'20" W 420.84 feet to the start of the southern boundary, thence S 82°46'59" E 1,352.08 feet to the end of the boundary; the Eastern boundary being South Armstrong Avenue; the Northern boundary being the Town Branch river and the Western boundary being the Western line of SW ¼ of said Section 23; containing 8.79 acres, more or less.

Parcel 765-16565-000:
Part of the SE ¼ of the SE ¼ of Section 22 Township 16 Range 30 West, Washington County, Arkansas, more particularly described as follows: Commencing at the NE corner of the SE ¼ of the SE ¼ of said Section 22, thence N 88°47' 39" W 8.25 feet to the point of beginning, thence N 87°27'42" W 1,313.91 feet, thence S 2°39'19" W 313.83 feet, thence S 82°46'44" E 1,318.55 feet, thence N 2°25'10" E 421.70 feet to the point of beginning, containing 11.10 acres, more or less.

Parcel 765-19945-000:
Part of the SE ¼ of the SW ¼ of Section 23 Township 16 Range 30 West, Washington County, Arkansas, more particularly described as follows: Commencing at the NW corner of the SE ¼ of the SW ¼ of said Section 23, thence S 14°09'01" E 359.31 feet to the point of beginning, thence S 02°49' 16" W 83.02 feet, thence S 87°10'39" E 45 feet, thence S 02°49'17" W 100 feet, thence N 87°10'44" W 45 feet, thence S 02°49'17" W 574.49 feet, thence N 77°36'17" E 829.26 feet, thence N 01°35'17" E 155.96 feet, thence S 87°12'44" E 340.52 feet to the West Fork White river, thence northwards along the West Fork White River to the Town Branch River, thence westwards along the Town Branch river to the point of beginning, containing 15.19 acres, more or less.

Parcel 765-14984-005:
Part of the NE 1/4 of the SE 1/4 of Section 21, Township 16, Range 30 West, Washington County, Arkansas, being more particularly described as follows: Commencing at a set nail and washer in 15th Street (AR St. Hwy. 16) being the NW corner of said NE 1/4 of the SE 1/4; thence along the northerly line of said tract S 86°47'43" E 282.23 feet; thence leaving said northerly line S 03°12'01" W 50.39 feet to a set iron pin on the southerly right-of-way of 15th Street (AR St. Hwy. 16) as per Instrument No. 2007-27048 filed with the Circuit Clerk of said county, said point being the point of beginning; thence leaving said right-of-way the following courses: S 04°33'27" W 125.97 feet to a set iron pin; S 18°32'05" E 35.86 feet to a set iron pin; S 40°22'53" E 134.15 feet to a set iron pin; S 55°21'08" E 57.71 feet to a set iron pin; S 02°45'26" E 155.78 feet to a set iron pin; S 83°06'06" E 8.88 feet to a set iron pin; S 07°03'11" E 259.18 feet to a set iron pin; S 41°41'01" E 176.23 feet to a set iron pin; S 52°02'23" E 74.26 feet to a set iron pin; S 28°52'24" W 111.80 feet to the centerline of Town Branch Creek as per Instrument No. 99-55780; thence along said centerline N 62°31'45" W 156.16 feet to the confluence of said Town Branch Creek with the Spout Springs Branch (formerly known as Tin Cup Creek) as per said Instrument No. 99-55780;

thence along the centerline of said Spout Springs Branch the following courses: N 24°12'54" W 224.72 feet; N 08°52'00" W 169.79 feet; N 18°25'35" E 118.03 feet; N 14°38'49" W 104.38 feet; N 28°38'25" W 356.28 feet to the southerly right-of-way of 15th Street (AR St. Hwy. 16) as per Arkansas State Highway Commission Job No. 9458; thence along said southerly right-of-way S 86°46'16" E 46.08 feet to a found iron pin (P.S. 1349); thence continuing along said right-of-way N 03°01'06" E 19.00 feet to a set iron pin on said southerly right-of-way of 15th Street (AR St. Hwy. 16) as per said 2007-27048; thence along said right-of-way S 87°12'12" E 64.15 feet to the point of beginning, containing 2.157 acres, more or less.

Parcel 765-14877-004:
(West Tract)
A part of the E 1/2 of the NE 1/4 of the SW 1/4 of Section 20, Township 16 North, Range 30 West, in the City of Fayetteville, Washington County, Arkansas, being more particularly described as follows: Beginning at a Point that is S 02°31'15" W 841.55 feet from the NW corner of said E 1/2 of the NE 1/4 of the SW 1/4; thence S 36°36'40" E 197.86; Thence S 59°51'34" E 42.63 feet; Thence S 75°10'38" E 259.86 feet; Thence S 71°35'14" E 184.03 feet to a point on the West right-of-way for Beechwood Avenue (Arkansas Highway 16 Bypass); thence continuing Southwesterly along said West right-of-way line for Beechwood Avenue along a 236.50 foot radius curve to the right having a delta angle of 65°52'31", an arc distance of 271.91 feet (the long chord of which bears S 60°54'27" W a distance of 257.18 feet); thence S 3°50'46" W 9.62 feet to a point on the North right-of-way line for 18th Street (Arkansas Highway 16 Bypass); thence along said North right-of-way for 18th Street N 87°10'48" W 374.29 feet to the West line of the E 1/2 of said NE 1/4 of the SW 1/4; thence N 2°31'15" E 421.47 feet to the Point of Beginning, containing 2.96 acres, more or less. Subject to all easements and/or rights-of-way of record.
(East Tract)
Part of the NW 1/4 of the SE 1/4 of Section 20, Township 16 North, Range 30 West, in the City of Fayetteville, Washington County, Arkansas, being more particularly described as follows: From the NW corner of the NW 1/4 of the SE 1/4 of said Section 20, thence N 87°13'22" W 464.78 feet; thence S 02°46'38" W 75.95 feet to a point on the South right-of-way for 15th Street in the center line of a ditch; thence along the center line of said ditch as follows: S 13°52'53" W 157.39 feet: thence S 17°38'29" E 138.54 feet; thence S 64°04'53" E 36.47 feet; thence S 0°11'38" E 193.83 feet: thence S 14°47'06" E 210.18 feet to the Point of Beginning; thence S 14°47'06" E 17.28 feet; thence S 30°02'00" E 82.11 feet to the West right-of-way for Razorback Road; thence S 18°21'12" W 85.18 feet; thence leaving said right-of-way for Razorback Road N 80°00'00" W along a creek 160.53 feet: thence N 26°42'27" W 82.42 feet; thence N 87°11'07" W 47.00 feet; thence S 43°05'33" W 42.72 feet; thence S 04°20'41" E 36.68 feet; thence S 30°46'23" W 139.36 feet; thence S 42°18'32" W 60.19 feet; thence S 03°00'17" W 234.86 feet to a point on the North line of Meadow Vale Subdivision; thence along the North line of Meadow Vale Subdivision N 87°09'34" W 220.24 feet to the NW corner of said Subdivision; thence along the East right-of-way of Ashwood Avenue N 03°26'28" E 20.00 feet; thence along the North right-of-way of 18th Street N 87°33'13" W 354.43 feet; thence along the East right-of-way of Arkansas Highway 16 Bypass N 02°11'12" E 143.59 feet; thence S

78°39'51" E 53.12 feet; thence N 88°19'10" E 235.14 feet; thence N 35°56'02" E 105.81 feet; thence N 71°19'21" E 245.73 feet; thence N 18°31'30" E 129.19 feet; thence N 79°34'14" E 45.32 feet; thence N 10°25'46" W 19.85 feet; thence N 79°34'14" E 92.66 feet: thence S 10°25'46" E 19.85 feet; thence N 79°34'14” E 185.64 feet to the Point of Beginning, containing 3.89 acres, more or less.

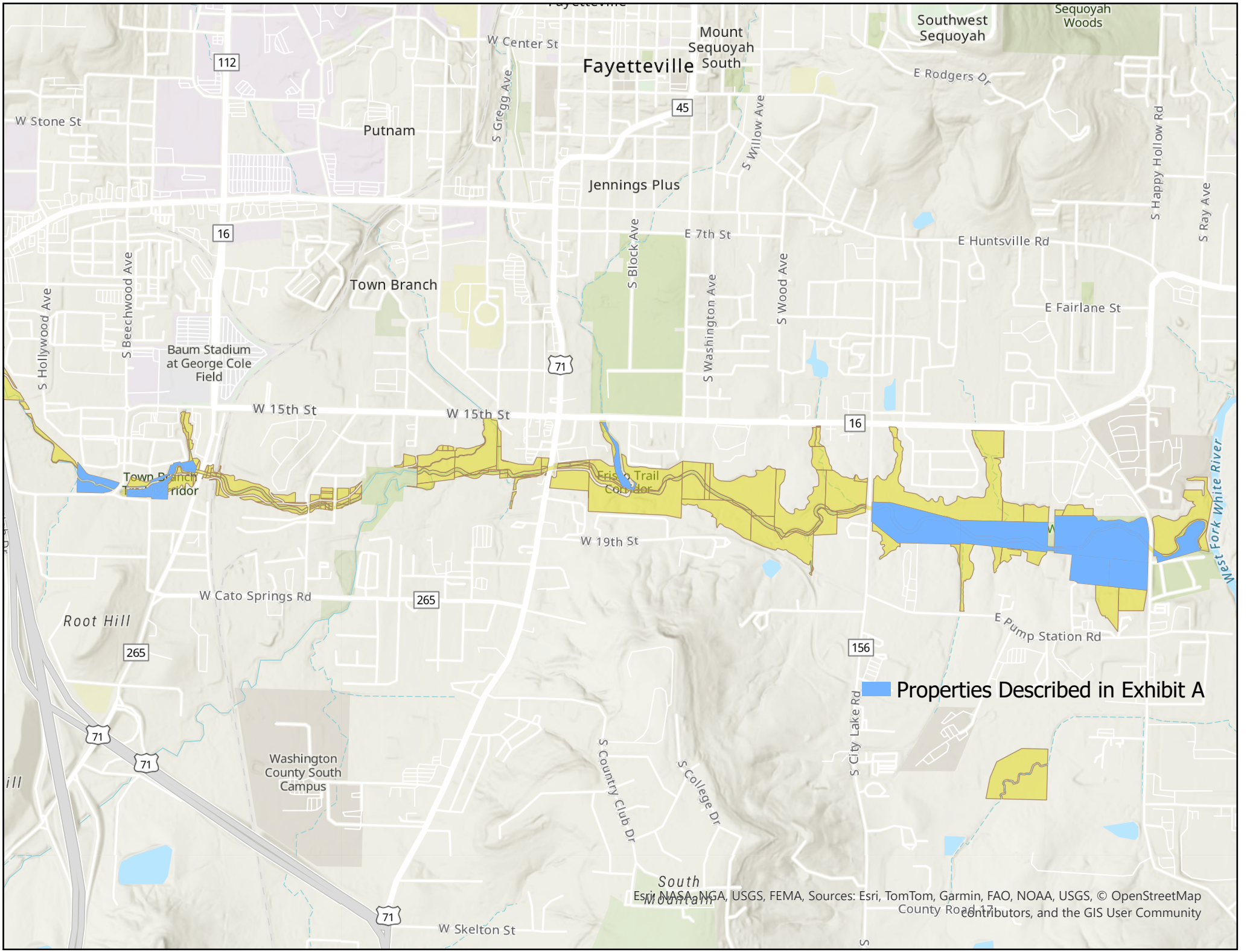
Fayetteville
Mount Sequoyah South
Southwest Sequoyah
Sequoyah Woods
Putnam
Jennings Plus
Town Branch
Baum Stadium at George Cole Field
Root Hill
Washington County South Campus
South Mountain
W Center St
E Rodgers Dr
W Stone St
S Gregg Ave
S Willow Ave
S Happy Hollow Rd
S Ray Ave
S Block Ave
E 7th St
E Huntsville Rd
S Hollywood Ave
S Beechwood Ave
S Washington Ave
S Wood Ave
E Fairlane St
W 15th St
W 19th St
W Cato Springs Rd
E Pump Station Rd
S Country Club Dr
S College Dr
S City Lake Rd
W Skelton St
County Road 17
West Fork White River
112
16
45
71
265
156
Properties Described in Exhibit A
Esri, NASA, NGA, USGS, FEMA, Sources: Esri, TomTom, Garmin, FAO, NOAA, USGS, © OpenStreetMap contributors, and the GIS User Community

Exhibit B

1. **Permitted Uses.** The following may be permitted on the Property, provided that streamside best management practices are followed, and that these uses and any necessary construction is designed and built to minimize the impact upon streamside areas and minimize any excavation or filling that will only be allowed by express authorization of the City Engineer. All construction, grading, excavation or filling must also fully comply with all necessary local, state and federal permits.

(a) Open space uses that are primarily passive in character including: preserves, fishing areas and docks, parkland, and natural trails.
(b) Streambank restoration or stabilization.
(c) Water quality monitoring, education and scientific studies.
(d) Revegetation, reforestation, and forestry best management practices such as thinning.
(e) Dam maintenance.
(f) Paved trails or other impervious surfaces not exceeding 12 feet in width. Such area may not be used to park vehicles except for the temporary purpose of accessing the site for maintenance.
(g) Stream crossings, including driveways, roadways, trails, or railroads when the City Engineer determines there is no practical and feasible alternative.
(h) Maintenance and upgrades of existing utility facilities.
(i) New utility facilities when the City Engineer determines there is no practical and feasible alternative.
(j) Management of lawns and gardens.
(k) Removal of dead vegetation, pruning for reasons of public safety, removal of invasive species.
(l) Application of any fertilizer, herbicide, pesticide, or insecticide shall be allowed only if their harmful effect on water quality is prevented by ensuring no over-application or misapplication occurs.
(m) Maintenance of drainage capacity in the channel including tree and sediment removal.
(n) New stormwater conveyances when the City Engineer determines that there is no practical and feasible alternative.
(o) Accessory structures without a foundation and no larger than 150 square feet, including storage sheds, playground equipment, gazebos, decks, etc.
(p) Active recreational uses compatible with conservation, such as trails, interpretive areas, and small picnic or overlook facilities, but excluding organized sports fields or uses requiring extensive mowing or grading. The Property described in Exhibit A shall be maintained in accordance with the submitted maintenance plan and used in a manner that maintains the integrity and function of the reported improvements and complies with applicable grant requirements.
(q) Systems, equipment, and devices funded under the CPRG shall be properly operated and maintained for their expected lifespan in accordance with commonly accepted design standards, specifications, and applicable grant requirements.
(r) Activities outlined in the CPRG Town Branch Corridor Management Plan prepared by Watershed Conservation Resource Center and dated June 9, 2025, for the Property.

2. **Prohibited Uses.** Establishment of the following uses/activities after the effective date of this ordinance shall be prohibited on the Property except where necessary to allow an activity permitted by section 3.

a) Grading, dredging, dumping, filling, or similar construction activities.
b) Landfills, junkyards, salvage yards.
c) Clearing of non-invasive woody vegetation.
d) Storage of hazardous materials or chemicals unless within waterproof containers and within a structure.
e) Parking lots.
f) Buildings and accessory structures with a building footprint larger than 150 square feet, except for structures which are opened on all sides, for example a boardwalk or pavilion.
g) Parking or storage of motor vehicles.
h) Septic systems and/or lateral lines.
i) In-ground pools.
j) Animal feedlots or kennels.
k) Housing, grazing or other maintenance of livestock.
l) Land application of biosolids.

3. Federal Real Property Requirements and Non-Conversion.

a) Use and encumbrance: The Property acquired or improved with federal funds under CPRG shall be used for the originally authorized purpose as long as needed for that purpose. The City shall not dispose of, encumber, or otherwise alter its title or other interests in the Property without prior written approval or disposition instructions from the United States Environmental Protection Agency (EPA), consistent with 2 CFR 200.311.
b) Recordation of federal interest: The Mayor and City Clerk-Treasurer are authorized and directed to execute and record in the real property records a Notice of Federal Interest, lien, or similar instrument indicating that the Property has been acquired or improved with federal funding and that federal use and disposition conditions apply, as authorized by 2 CFR 200.316.
c) Disposition when no longer needed: When the Property is no longer needed for the originally authorized purpose, the City shall obtain disposition instructions from EPA and comply with those instructions, which may include retention with compensation, sale with compensation, or transfer of title, consistent with 2 CFR 200.311.
d) Non-conversion prior to 2050: The City shall not convert the Property or any CPRG-funded improvements to a non-conservation use, nor dispose of or encumber the Property, prior to December 31, 2050, without prior written approval from Metroplan and, as applicable, EPA. Any approved conversion or disposition shall comply with EPA instructions, including compensation or mitigation requirements.

4. Construction and Procurement Compliance (DBRA and BABA)

a) Davis–Bacon and Related Acts (DBRA): Construction activities funded in whole or in part by CPRG shall comply with DBRA requirements, including payment of prevailing wages and inclusion of applicable contract clauses and wage determinations, consistent with 29 CFR Parts 1 and 5. The City shall include required DBRA provisions in all bids and contracts under this grant and provide oversight to ensure contractor compliance.
b) Build America, Buy America (BABA): The City shall include applicable BABA terms in subawards, requests for proposals, solicitations for bids, and all contracts, and shall ensure compliance with BABA requirements for covered infrastructure.

5. Federal Environmental Compliance and Climate Resilience

a) Federal environmental requirements: Activities under this Ordinance shall comply with applicable federal requirements, including but not limited to: Clean Water Act Sections 404/401 and NPDES stormwater permitting; the Endangered Species Act (50 CFR Part 402); the National Historic Preservation Act Section 106 consultation requirements; the Archeological and Historic Preservation Act (stop-work and notification upon discovery of artifacts); and the Farmland Protection Policy Act, as applicable.
b) Climate resilience: To the extent practicable, the City shall incorporate current and future climate risk into the planning, siting, design, and operation of CPRG-funded projects consistent with CPRG programmatic terms.

6. Signage and Public Communications

Use of logos: The City shall acknowledge EPA support in public communications consistent with EPA logo use policy, ensuring EPA's logo is not displayed in a manner that implies EPA conducts City activities, and including appropriate acknowledgment text.

7. Health and Safety

Health and Safety Plan: Before beginning field work, the City shall maintain an OSHA-compliant health and safety plan (29 CFR 1910.120) available to EPA upon request.

CITY OF FAYETTEVILLE ARKANSAS

CITY COUNCIL MEMO
2026-1957

MEETING OF JUNE 16, 2026

TO: Mayor Rawn and City Council

THROUGH: Keith Macedo, Chief of Staff
Jonathan Curth, Development Services Director
Jessica Masters, Planning Director

FROM: Citlali Samano, Planner

SUBJECT: **VAC-2026-0006: Vacation (1661 E. CYPRESS LN/LOVIN, 370): Submitted by ALAN REID & ASSOCIATES for property located at 1660 E. CYPRESS LN. in WARD 3. The property is zoned RSF-4, RESIDENTIAL SINGLE-FAMILY, FOUR UNITS PER ACRE, and contains approximately 0.12 acres. The request is to vacate 15.60 square feet of a general utility easement.**

RECOMMENDATION:
Staff recommends approval of VAC-2026-0006 as shown in the attached Exhibits 'A' and 'B' and with the following conditions:

1. Any damage or relocation of any existing facilities will be at the property owner's expense.

BACKGROUND:
The subject property is located in east Fayetteville, approximately 75 feet north of Fairview Memorial Gardens. The subject site is developed with a single-family development that was built in 2004. The subject property is not within any overlay districts. The property is zoned RSF-4, Residential Single-Family, Four Units per Acre. This easement vacation runs along the Northeast portion of the property that runs along the single-family structure and front porch.

Request: The applicant is requesting to vacate a portion of an existing general utility easement totaling 15.60 square feet at the Northeast corner of the dwelling unit at 1661 E. Cypress Ln.

DISCUSSION:

City staff recommends approval of the requested utility easement vacation. According to the applicant, the proposed vacation will remedy the existing encroachment into the general utility easement, as the home was constructed in 2004. The applicant has submitted the required written consent forms from the appropriate utility providers with no objection. One condition of approval has been recommended, as outlined above.

BUDGET/STAFF IMPACT:
N/A

ATTACHMENTS: 3. Staff Review Form, 4. Exhibit A, 5. Exhibit B, 6. Request Letter, 7. Petition to Vacate, 8. Survey

113 West Mountain Street
Fayetteville, AR 72701
(479) 575-8323

File #: 2026-1957

AN ORDINANCE TO APPROVE VAC-26-06 FOR PROPERTY LOCATED AT 1660 EAST CYPRESS LANE IN WARD 3 TO VACATE 15.60 SQUARE FEET OF GENERAL UTILITY EASEMENT

WHEREAS, the City Council has the authority under Ark. Code Ann. § 14-54-104 to vacate public grounds or portions thereof which are not required for corporate purposes; and

WHEREAS, the City Council has determined that the following described portion of general utility easement is not required for corporate purposes.

NOW, THEREFORE, BE IT ORDAINED BY THE CITY COUNCIL OF THE CITY OF FAYETTEVILLE, ARKANSAS:

Section 1: That the City Council of the City of Fayetteville, Arkansas hereby vacates the portion of general utility easement as described in Exhibit B attached to the Planning Department's memo.

Section 2: A copy of this Ordinance duly certified by the City Clerk along with the map attached as Exhibit A to the Planning Department's memo shall be filed in the office of the Washington County Circuit Clerk.

Section 3: This vacation approval is subject to the condition that any damage to or relocation of existing facilities will be at the property owner/developer's expense.

City of Fayetteville Staff Review Form

2026-1957

Item ID

6/16/2026

City Council Meeting Date - Agenda Item Only
N/A for Non-Agenda Item

Jonathan Curth	5/28/2026	DEVELOPMENT SERVICES (620)
Submitted By	**Submitted Date**	**Division / Department**

Action Recommendation:

VAC-2026-0006: Vacation (1661 E. CYPRESS LN/LOVIN, 370): Submitted by ALAN REID & ASSOCIATES for property located at 1661 E. CYPRESS LN. in WARD 3. The property is zoned RSF-4, RESIDENTIAL SINGLE-FAMILY, FOUR UNITS PER ACRE, and contains approximately 0.12 acres. The request is to vacate 15.60 square feet of a general utility easement.

Budget Impact:

Account Number			Fund	
Project Number			Project Title	
Budgeted Item?	No	Total Amended Budget	$	-
		Expenses (Actual+Encum)	$	-
		Available Budget	$	-
Does item have a direct cost?	No	Item Cost	$	-
Is a Budget Adjustment attached?	No	Budget Adjustment	$	-
		Remaining Budget	$	-

V20221130

Purchase Order Number:

Previous Ordinance or Resolution #

Change Order Number:

Approval Date:

Original Contract Number:

Comments:

VAC-2026-0006

Close Up View

1661 E CYPRESS LN

EXHIBIT A

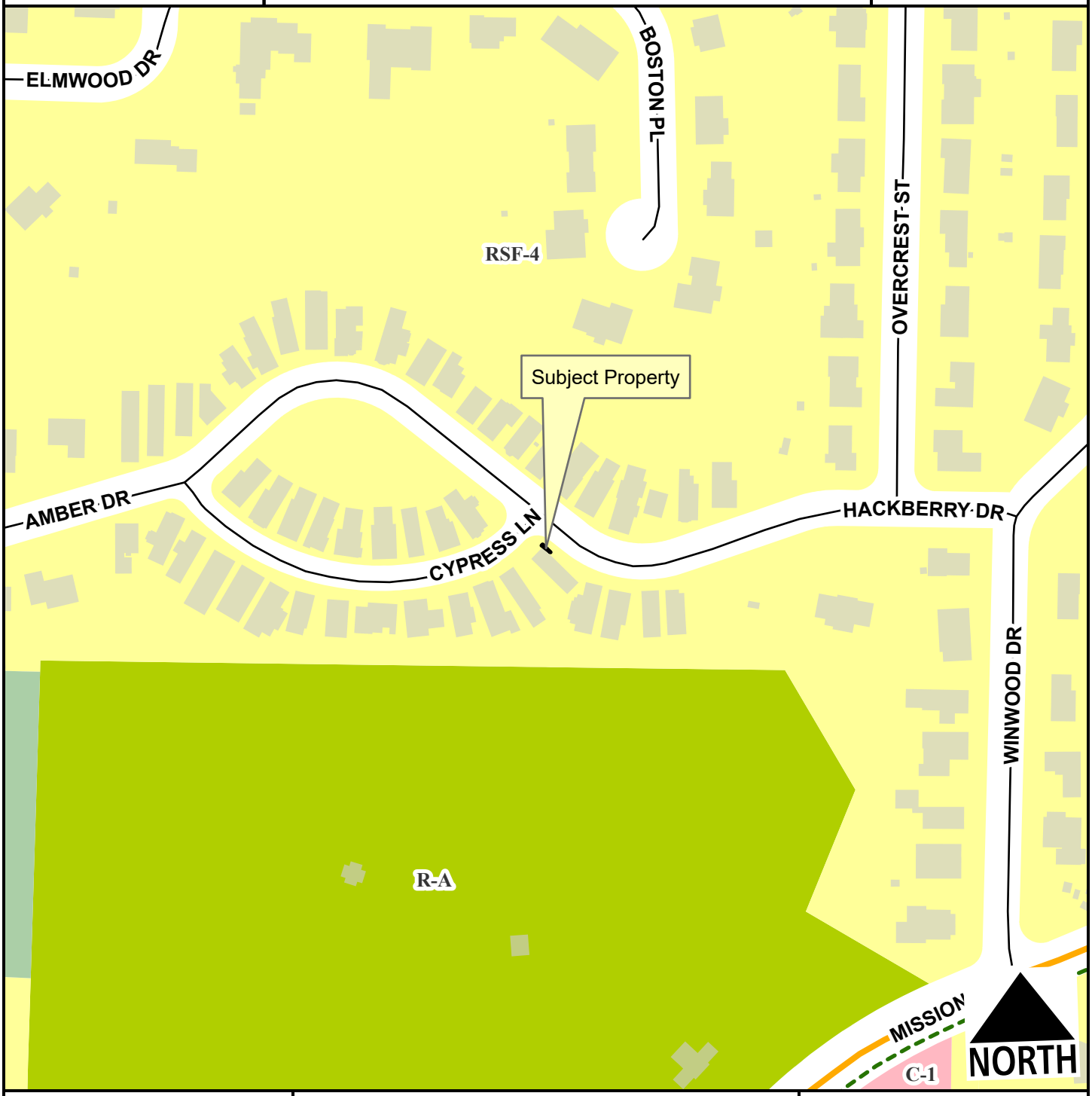

Neighborhood Link
Residential Link
Planning Area
Fayetteville City Limits
Shared-Use Paved Trail

Feet

0 75 150 300 450 600

1:2,400

Exhibit B

UTILITY EASEMENT VACATION AT: 1661 E CYPRESS LANE, FAYETTEVILLE, AR 72703
THE BELOW DESCRIPTION CORRESPONDS WITH ALAN REID & ASSOCIATES JOB #26098-I

SURVEY DESCRIPTION - UTILITY EASEMENT VACATION AREA

A PART OF LOT SIX NUMBERED (6), CHARLESTON PLACE, A PLANNED UNIT DEVELOPMENT TO THE CITY OF FAYETTEVILLE, AS SHOWN IN PLAT BOOK 16 AT PAGE 36 OF THE LAND RECORDS OF WASHINGTON COUNTY, ARKANSAS, BEING DESCRIBED AS FOLLOWS: COMMENCING AT THE SOUTHEAST CORNER OF SAID LOT SIX (6), SAID POINT BEING AN EXISTING IRON REBAR; THENCE N33°14'34"E 64.28 FEET TO AN EXISTING IRON REBAR AT THE NORTHEAST CORNER OF SAID LOT SIX (6), SAID POINT BEING ON A 175.00 FOOT RADIUS CURVE CONCAVE TO THE NORTHEAST; THENCE NORTHWESTERLY 33.42 FEET ALONG SAID CURVE AND RIGHT-OF-WAY LINE OF AMBER DRIVE, THE CHORD FOR WHICH BEING N54°44'01'E 33.37 FEET, TO THE POINT OF TANGENCY; THENCE N49°40'22"W 17.02 FEET ALONG SAID RIGHT-OF-WAY LINE TO A POINT; THENCE LEAVING SAID RIGHT-OF-WAY LINE, S40°19'38"W 12.50 FEET TO THE TRUE POINT OF BEGINNING, SAID POINT BEING THE INTERSECTION OF THE NORTHEASTERLY SIDE OF AN EXISTING HOUSE AND THE SOUTHERLY BOUNDARY OF A TWELVE AND ONE-HALF (12.50) FOOT WIDE BUILDING SETBACK AND UTILITY EASEMENT; THENCE N49°40'22"W 12.92 FEET ALONG SAID SETBACK AND UTILITY BOUNDARY TO THE BEGINNING OF A 12.50 FOOT RADIUS CURVE CONCAVE TO THE SOUTHWEST; THENCE NORTHWESTERLY 2.60 FEET ALONG SAID SETBACK AND UTILITY EASEMENT BOUNDARY, THE CHORD FOR WHICH BEING N55°11'44"W 2.59 FEET, TO A POINT ON THE NORTHWESTERLY SIDE OF A TWO STORY COVERED PORCH; THENCE LEAVING SAID BUILDING SETBACK AND UTILITY EASEMENT BOUNDARY, N46°34'15"E 2.25 FEET TO THE NORTHWEST CORNER OF SAID COVERED PORCH; THENCE S42°14'08"E 15.38 FEET ALONG THE NORTHEASTERLY SIDE OF SAID PORCH AND HOUSE TO THE POINT OF BEGINNING, CONTAINING 15.60 SQUARE FEET, MORE OR LESS.

Alan Reid
& ASSOCIATES
PROFESSIONAL
LAND
SURVEYORS
BOUNDARY
TOPO
GPS

May 20th, 2026

City of Fayetteville
Planning & Engineering
125 W. Mountain Street
Fayetteville, Arkansas

Re: Revised Letter of Request-Utility Easement Vacation Request at: 1661 E. Cypress Ln., Fayetteville, AR 72703 / Parcel # 765-21863-000 / ARA job 26098-I / Lot 6, Charleston Place, a Planned Unit Development to the City of Fayetteville, as shown in Plat Book 16 at Page 36 of the Land Records of Washington County, AR

Dear City Council:

On behalf of my client, Barbara Colleen Lovin, I am submitting for your review a proposed utility easement (u.e.) vacation for property located at address: 1661 E. Cypress Ln., Fayetteville, AR 72703. There is an encroachment into the u.e. with a small sliver of the northeast corner of the house (1 ft at the greatest width) and a small sliver of the covered porch (2.25 ft at the greatest width). The home was built in 2004 and the current request aims to remedy the encroachment issue. Please see the attached drafted survey drawing (ARA job no. 26098-I) with Vacation Area Detail for further details.

Please contact our office with any questions regarding the project.
479.444.8784

Best regards,

Alan Reid

Professional Land Surveyor

Alan Reid & Associates

PETITION TO VACATE A GENERAL UTILITY EASEMENT LOCATED IN LOT SIX NUMBERED (6), CHARLESTON PLACE, A PLANNED UNIT DEVELOPMENT TO THE CITY OF FAYETTEVILLE, AS SHOWN IN PLAT BOOK 16 AT PAGE 36 OF THE LAND RECORDS OF WASHINGTON COUNTY, ARKANSAS

To: The Fayetteville City Council

I, the undersigned, being all the owners of the real estate abutting the easement hereinafter sought to be abandoned and vacated, lying in lot six numbered (6), Charleston Place, a Planned Unit Development, City of Fayetteville, Arkansas, a municipal corporation, petition to vacate an easement which is described as follows (*please see attached drafted survey drawing for a visual*):

SURVEY DESCRIPTION - UTILITY EASEMENT VACATION AREA

A PART OF LOT SIX NUMBERED (6), CHARLESTON PLACE, A PLANNED UNIT DEVELOPMENT TO THE CITY OF FAYETTEVILLE, AS SHOWN IN PLAT BOOK 16 AT PAGE 36 OF THE LAND RECORDS OF WASHINGTON COUNTY, ARKANSAS, BEING DESCRIBED AS FOLLOWS: COMMENCING AT THE SOUTHEAST CORNER OF SAID LOT SIX (6), SAID POINT BEING AN EXISTING IRON REBAR; THENCE N33°14'34"E 64.28 FEET TO AN EXISTING IRON REBAR AT THE NORTHEAST CORNER OF SAID LOT SIX (6), SAID POINT BEING ON A 175.00 FOOT RADIUS CURVE CONCAVE TO THE NORTHEAST; THENCE NORTHWESTERLY 33.42 FEET ALONG SAID CURVE AND RIGHT-OF-WAY LINE OF AMBER DRIVE, THE CHORD FOR WHICH BEING N54°44'01'E 33.37 FEET, TO THE POINT OF TANGENCY; THENCE N49°40'22"W 17.02 FEET ALONG SAID RIGHT-OF-WAY LINE TO A POINT; THENCE LEAVING SAID RIGHT-OF-WAY LINE, S40°19'38"W 12.50 FEET TO THE TRUE POINT OF BEGINNING, SAID POINT BEING THE INTERSECTION OF THE NORTHEASTERLY SIDE OF AN EXISTING HOUSE AND THE SOUTHERLY BOUNDARY OF A TWELVE AND ONE-HALF (12.50) FOOT WIDE BUILDING SETBACK AND UTILITY EASEMENT; THENCE N49°40'22"W 12.92 FEET ALONG SAID SETBACK AND UTILITY BOUNDARY TO THE BEGINNING OF A 12.50 FOOT RADIUS CURVE CONCAVE TO THE SOUTHWEST; THENCE NORTHWESTERLY 2.60 FEET ALONG SAID SETBACK AND UTILITY EASEMENT BOUNDARY, THE CHORD FOR WHICH BEING N55°11'44"W 2.59 FEET, TO A POINT ON THE NORTHWESTERLY SIDE OF A TWO STORY COVERED PORCH; THENCE LEAVING SAID BUILDING SETBACK AND UTILITY EASEMENT BOUNDARY, N46°34'15"E 2.25 FEET TO THE NORTHWEST CORNER OF SAID COVERED PORCH; THENCE S42°14'08"E 15.38 FEET ALONG THE NORTHEASTERLY SIDE OF SAID PORCH AND HOUSE TO THE POINT OF BEGINNING, CONTAINING 15.60 SQUARE FEET, MORE OR LESS.

That no other abutting real estate is affected by said abandonment of the utility easement and that the public interest and welfare would not be adversely affected by the abandonment of the above-described portion of the utility easement.

WHEREFORE, the undersigned petitioner respectfully pray that the governing body of the City of Fayetteville, Arkansas, abandon and vacate the above-described real estate, and as to that particular land the owner and subsequent owners be free from the easements of the public for the use of said utility easement.

Dated this 11th day of May, 2026.

Barbara Colleen Lovin
Printed Name

Barbara Colleen Lovin
Signature

OWNER: BARBARA COLLEEN LOVIN

ADDRESS: 1661 E. CYPRESS LN,
FAYETTEVILLE, AR 72703
PARCEL NO. 765-21863-000

BASIS OF BEARINGS: ARKANSAS STATE PLANE
COORDINATE SYSTEM
(NORTH ZONE) NAD83

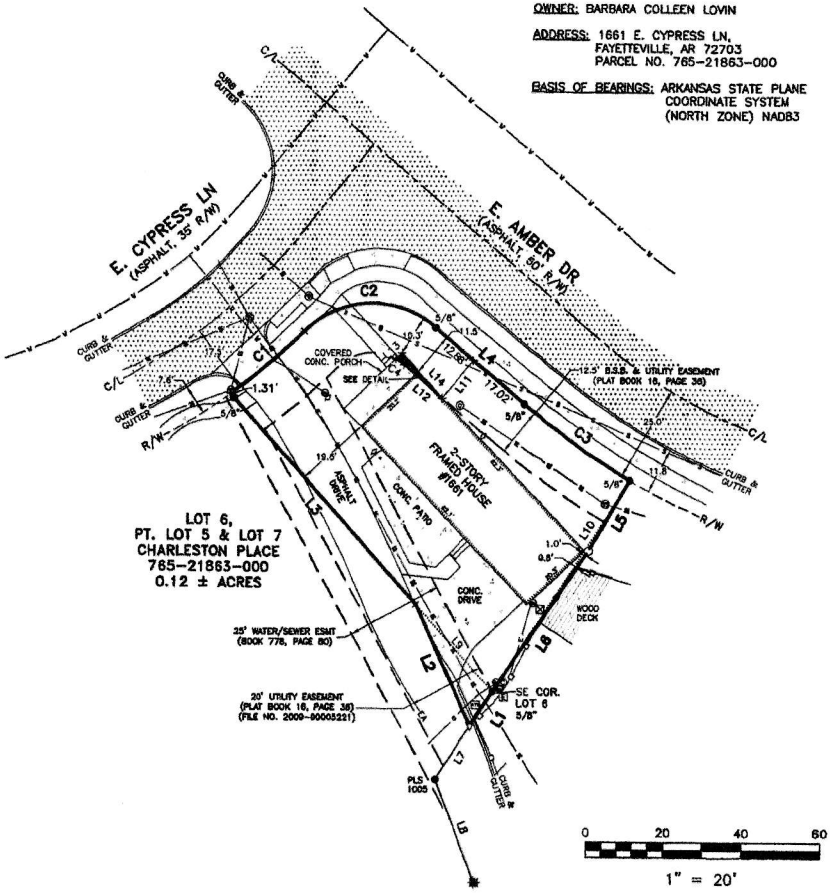

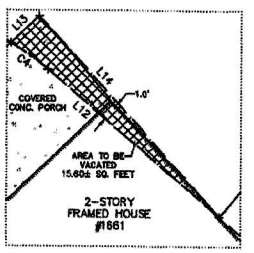

VACATION AREA DETAIL

SURVEY DESCRIPTION

LOT SIX (6) AND A PART OF LOT SEVEN (7), CHARLESTON PLACE, A PLANNED UNIT DEVELOPMENT TO THE CITY OF ARKANSAS, AS SHOWN IN PLAT BOOK 16 AT PAGE 36 OF THE LAND RECORDS OF WASHINGTON COUNTY, ARKANSAS, THAT PART LOT SEVEN (7) BEING DESCRIBED AS FOLLOWS: BEGINNING AT THE NORTHEAST CORNER OF SAID LOT SEVEN (7), SAID POINT BEING AN EXISTING IRON REBAR; THENCE S32°50'53"W 10.46 FEET TO A SET MAGNETIC NAIL IN AN ASPHALT DRIVE; THENCE N24°28'31"W 33.73 FEET TO THE NORTHERLY LINE OF SAID LOT SEVEN (7); THENCE S41°52'58"E 29.43 FEET TO THE POINT OF BEGINNING, CONTAINING 148.5 SQUARE FEET, MORE OR LESS.

ALSO,

A PART OF LOT FIVE (5), CHARLESTON PLACE, A PLANNED UNIT DEVELOPMENT TO THE CITY OF FAYETTEVILLE, ARKANSAS, AS SHOWN IN PLAT BOOK 16 AT PAGE 36 OF THE LAND RECORDS OF WASHINGTON COUNTY, ARKANSAS, BEING DESCRIBED AS FOLLOWS: BEGINNING AT THE NORTHEAST CORNER OF SAID LOT FIVE (5); THENCE S30°57'07"W 21.00 FEET; THENCE S34°21'11"W 43.31 FEET TO AN EXISTING IRON REBAR AT THE AT THE WEST LINE OF SAID FIVE (5); THENCE N33°14'34"E 64.28 FEET TO THE POINT OF BEGINNING, CONTAINING 27.0 SQUARE FEET, MORE OR LESS.

SURVEY DESCRIPTION – UTILITY EASEMENT VACATION AREA

A PART OF LOT SIX NUMBERED (6), CHARLESTON PLACE, A PLANNED UNIT DEVELOPMENT TO THE CITY OF FAYETTEVILLE, AS SHOWN IN PLAT BOOK 16 AT PAGE 36 OF THE LAND RECORDS OF WASHINGTON COUNTY, ARKANSAS, BEING DESCRIBED AS FOLLOWS: COMMENCING AT THE SOUTHEAST CORNER OF SAID LOT SIX (6), SAID POINT BEING AN EXISTING IRON REBAR; THENCE N33°14'34"E 64.28 FEET TO AN EXISTING IRON REBAR AT THE NORTHEAST CORNER OF SAID LOT SIX (6), SAID POINT BEING ON A 175.00 FOOT RADIUS CURVE CONCAVE TO THE NORTHEAST; THENCE NORTHWESTERLY 33.42 FEET ALONG SAID CURVE AND RIGHT-OF-WAY LINE OF AMBER DRIVE, THE CHORD FOR WHICH BEING N54°44'01"E 33.37 FEET, TO THE POINT OF TANGENCY; THENCE N49°40'22"W 17.02 FEET ALONG SAID RIGHT-OF-WAY LINE TO A POINT; THENCE LEAVING SAID RIGHT-OF-WAY LINE, S40°19'38"W 12.50 FEET TO THE TRUE POINT OF BEGINNING, SAID POINT BEING THE INTERSECTION OF THE NORTHEASTERLY SIDE OF AN EXISTING HOUSE AND THE SOUTHERLY BOUNDARY OF A TWELVE AND ONE-HALF (12.50) FOOT WIDE BUILDING SETBACK AND UTILITY EASEMENT; THENCE N49°40'22"W 12.92 FEET ALONG SAID SETBACK AND UTILITY BOUNDARY TO THE BEGINNING OF A 12.50 FOOT RADIUS CURVE CONCAVE TO THE SOUTHWEST; THENCE NORTHWESTERLY 2.60 FEET ALONG SAID SETBACK AND UTILITY EASEMENT BOUNDARY, THE CHORD FOR WHICH BEING N55°11'44"W 2.59 FEET, TO A POINT ON THE NORTHWESTERLY SIDE OF A TWO STORY COVERED PORCH; THENCE LEAVING SAID BUILDING SETBACK AND UTILITY EASEMENT BOUNDARY, N46°34'15"E 2.25 FEET TO THE NORTHWEST CORNER OF SAID COVERED PORCH; THENCE S42°14'08"E 15.38 FEET ALONG THE NORTHEASTERLY SIDE OF SAID PORCH AND HOUSE TO THE POINT OF BEGINNING, CONTAINING 15.60 SQUARE FEET, MORE OR LESS.

LINE	BEARING	DISTANCE
L1	S32°50'53"W	10.46'
L2	N24°28'31"W	33.73'
L3	N41°52'58"W	71.72'
L4	S49°40'22"E	29.90'
L5	S30°57'07"W	21.00'
L6	S34°21'11"W	43.31'
L7	S32°50'53"W	18.30'
L8	S20°54'51"E	28.05'
L9	S41°52'58"E	29.43'
L10	N33°14'34"E	64.28'
L11	S40°19'38"W	12.50'
L12	N49°40'22"W	12.92'
L13	N46°34'15"E	2.25'
L14	S42°14'08"E	15.38'

CURVE	RADIUS	ARC LENGTH	CHORD LENGTH	CHORD BEARING	DELTA ANGLE
C1	187.50'	24.99'	24.97'	N48°56'25"E	6°26'48"
C2	25.00'	37.21'	33.87'	N87°59'18"E	85°16'54"
C3	175.00'	33.42'	33.37'	S54°44'01"E	10°56'28"
C4	12.50'	2.60'	2.59'	N55°11'44"W	11°53'58"

PLAT NOTES:

EXCEPT AS SPECIFICALLY STATED OR SHOWN ON THIS PLAT, THIS SURVEY DOES NOT PURPORT TO REFLECT ANY OF THE FOLLOWING WHICH MAY BE APPLICABLE TO THE SUBJECT REAL ESTATE:

EASEMENTS, OTHER THAN POSSIBLE EASEMENTS WHICH WERE VISIBLE AT THE TIME OF MAKING OF THIS SURVEY; RESTRICTIVE COVENANTS; SUBDIVISION RESTRICTIONS OR OTHER LAND USE REGULATIONS; AND ANY OTHER FACTS WHICH AN ACCURATE TITLE SEARCH MAY DISCLOSE.

THIS SURVEY IS VALID ONLY IF THE DRAWING INCLUDED THE SEAL AND SIGNATURE OF THE SURVEYOR.

THIS SURVEY MEETS OR EXCEEDS THE CURRENT "ARKANSAS MINIMUM STANDARDS FOR PROPERTY BOUNDARY SURVEYS AND PLATS".

DECLARATION IS MADE TO THE ORIGINAL PURCHASER OF THE SURVEY. IT IS NOT TRANSFERABLE TO ADDITIONAL INSTITUTIONS OR SUBSEQUENT OWNERS.

SUBSURFACE AND ENVIRONMENTAL CONDITIONS WERE NOT EXAMINED OR CONSIDERED AS A PART OF THIS SURVEY.

LEGEND

AC UNIT	FIBER OPTICS SIGN	SANITARY SEWER MANHOLE
BACKFLOW VALVE	FIRE HYDRANT	SATELLITE DISH
BOLLARD POST	FIRE SPRINKLER	SEPTIC TANK LID
BUGGY AXLE	FLAG POLE	SET ALUMINUM MONUMENT
CABLE BOX	GAS LINE SIGN	SET COTTON SPINDLE
CABLE TV PEDESTAL	GAS METER	SET STAKE ON LINE
CHISELED "X"	GAS STUB	SET 1/2" IRON REBAR
COMPUTED POINT	GAS REGULATOR	STATE MONUMENT
CONC. MONUMENT	GENERATOR	STONE MONUMENT
C.O.S. MONUMENT	GROUND LIGHT	STORM DRAIN MANHOLE
DOWN GUY	IRRIG. CONTROL VALVE	STREET SIGN
DRAIN GRATE	JUNCTION BOX	T-POST
ELECTRIC BOX	LAMP POST	TELEPHONE BOX
ELECTRIC METER	MAIL BOX	TELEPHONE PEDESTAL
ELECTRIC PEDESTAL	PARKING SIGN	TEMPORARY BENCHMARK
EXIST. ALUM. CAPPED MON.	PAY PHONE	TRAFFIC SIGNAL BOX
EXIST. COTTON SPINDLE	POWER POLE	TRANSFORMER BOX
EXISTING IRON PIPE	PROPANE TANK	TREE
EXISTING IRON REBAR	RAILROAD SPIKE	WATER LINE SIGN
EXISTING NAIL	READING	WATER METER
FENCE POST	RIGHT OF WAY MONUMENT	WATER SPIGOT
EXIST. IRON IN CONCRETE	SANITARY SEWER CLEANOUT	WATER VALVE

CENTERLINE ROAD	EASEMENT LINE
RIGHT-OF-WAY LINE	BUILDING SETBACK LINE
BARBED-WIRE FENCE	OVERHEAD ELECTRIC LINE
CHAIN-LINKED FENCE	UNDERGROUND ELECTRIC LINE
PRIVACY FENCE	GAS LINE
WIRE FENCE	SANITARY SEWER LINE
MAJOR CONTOUR INTERVAL	STORM SEWER LINE
MINOR CONTOUR INTERVAL	TELEPHONE LINE
BUILDING LINE	WATER LINE
FIBER-OPTICS LINE	PROPERTY LINE
DITCH/WATER LINE	

VAC-2026-00XX

REVISIONS		
DATE	DESCRIPTION	BY

ARA — 115 S. Gillette Ridge, Fayetteville, Arkansas 72701 — 479.444.8746 — www.aracivil.com

Alan Reid & Associates — Professional Land Surveying Company — 1979

DRAFTSMAN	DF
DATE	03/07/2026
CHECKED	-
SCALE	1" = 20'
SHEET SIZE	18"x 24"

SHEET 1 OF 1 — 2026-1 — JOB NO.

BARBARA COLLEEN LOVIN
1661 E. CYPRESS LN, FAYETTEVILLE, AR 72703
PARCEL NO. 765-21863-000

EASEMENT/B.S.B. VACATION – FAYETTEVILLE, ARKANSAS

OWNER: BARBARA COLLEEN LOVIN

ADDRESS: 1661 E. CYPRESS LN,
FAYETTEVILLE, AR 72703
PARCEL NO. 765-21863-000

BASIS OF BEARINGS: ARKANSAS STATE PLANE
COORDINATE SYSTEM
(NORTH ZONE) NAD83

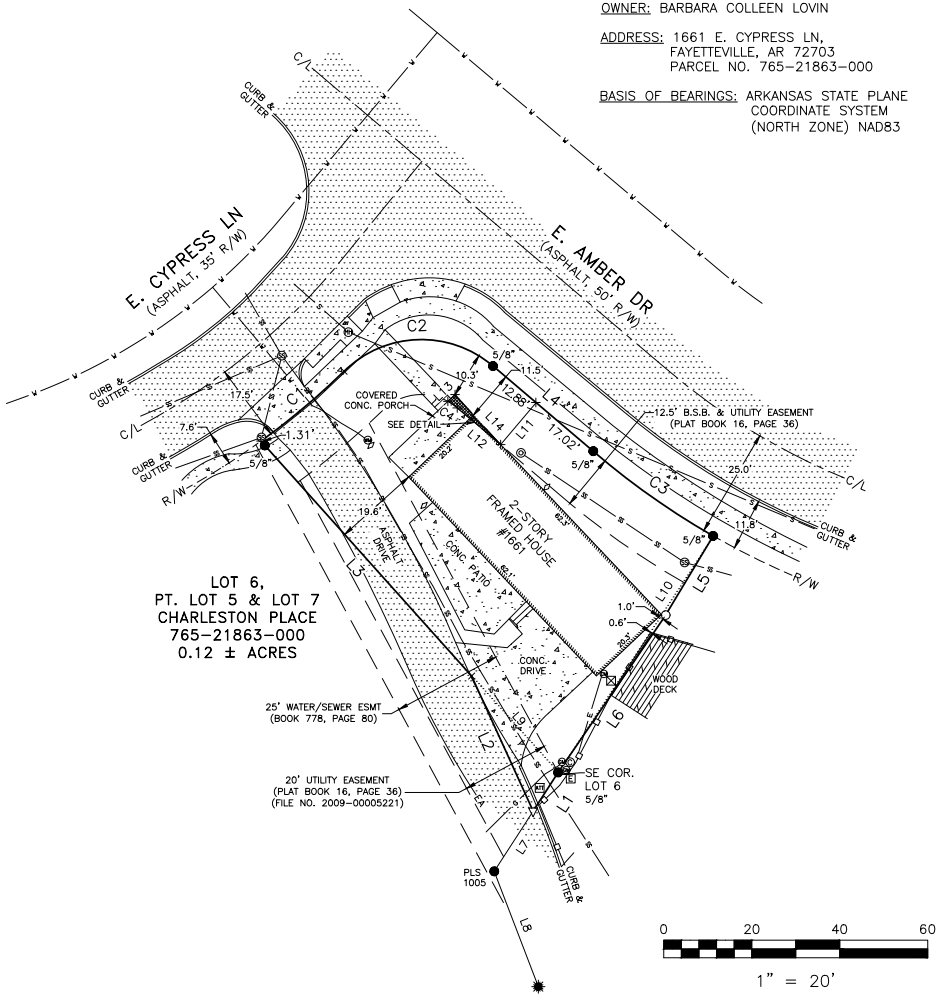

LINE	BEARING	DISTANCE
L1	S32°50'53"W	10.46'
L2	N24°28'31"W	33.73'
L3	N41°52'58"W	71.72'
L4	S49°40'22"E	29.90'
L5	S30°57'07"W	21.00'
L6	S34°21'11"W	43.31'
L7	S32°50'53"W	16.30'
L8	S20°54'51"E	28.05'
L9	S41°52'58"E	29.43'
L10	N33°14'34"E	64.28'
L11	S40°19'38"W	12.50'
L12	N49°40'22"W	12.92'
L13	N46°34'15"E	2.25'
L14	S42°14'08"E	15.38'

CURVE	RADIUS	ARC LENGTH	CHORD LENGTH	CHORD BEARING	DELTA ANGLE
C1	167.50'	24.69'	24.67'	N49°56'25"E	8°26'48"
C2	25.00'	37.21'	33.87'	N87°59'18"E	85°16'54"
C3	175.00'	33.42'	33.37'	S54°44'01"E	10°56'26"
C4	12.50'	2.60'	2.59'	N55°11'44"W	11°53'58"

PLAT NOTES:

EXCEPT AS SPECIFICALLY STATED OR SHOWN ON THIS PLAT, THIS SURVEY DOES NOT PURPORT TO REFLECT ANY OF THE FOLLOWING WHICH MAY BE APPLICABLE TO THE SUBJECT REAL ESTATE:

EASEMENTS, OTHER THAN POSSIBLE EASEMENTS WHICH WERE VISIBLE AT THE TIME OF MAKING OF THIS SURVEY; RESTRICTIVE COVENANTS; SUBDIVISION RESTRICTIONS OR OTHER LAND USE REGULATIONS; AND ANY OTHER FACTS WHICH AN ACCURATE TITLE SEARCH MAY DISCLOSE.

THIS SURVEY IS VALID ONLY IF THE DRAWING INCLUDED THE SEAL AND SIGNATURE OF THE SURVEYOR.

THIS SURVEY MEETS OR EXCEEDS THE CURRENT "ARKANSAS MINIMUM STANDARDS FOR PROPERTY BOUNDARY SURVEYS AND PLATS".

DECLARATION IS MADE TO THE ORIGINAL PURCHASER OF THE SURVEY. IT IS NOT TRANSFERABLE TO ADDITIONAL INSTITUTIONS OR SUBSEQUENT OWNERS.

SUBSURFACE AND ENVIRONMENTAL CONDITIONS WERE NOT EXAMINED OR CONSIDERED AS A PART OF THIS SURVEY.

SURVEY DESCRIPTION

LOT SIX (6) AND A PART OF LOT SEVEN (7), CHARLESTON PLACE, A PLANNED UNIT DEVELOPMENT TO THE CITY OF FAYETTEVILLE, AS SHOWN IN PLAT BOOK 16 AT PAGE 36 OF THE LAND RECORDS OF WASHINGTON COUNTY, ARKANSAS, THAT PART LOT SEVEN (7) BEING DESCRIBED AS FOLLOWS: BEGINNING AT THE NORTHEAST CORNER OF SAID LOT SEVEN (7), SAID POINT BEING AN EXISTING IRON REBAR; THENCE S32°50'53"W 10.46 FEET TO A SET MAGNETIC NAIL IN AN ASPHALT DRIVE; THENCE N24°28'31"W 33.73 FEET TO THE NORTHERLY LINE OF SAID LOT SEVEN (7); THENCE S41°52'58"E 29.43 FEET TO THE POINT OF BEGINNING, CONTAINING 148.5 SQUARE FEET, MORE OR LESS.

ALSO,

A PART OF LOT FIVE (5), CHARLESTON PLACE, A PLANNED UNIT DEVELOPMENT TO THE CITY OF FAYETTEVILLE, ARKANSAS, AS SHOWN IN PLAT BOOK 16 AT PAGE 36 OF THE LAND RECORDS OF WASHINGTON COUNTY, ARKANSAS, BEING DESCRIBED AS FOLLOWS: BEGINNING AT THE NORTHEAST CORNER OF SAID LOT FIVE (5); THENCE S30°57'07"W 21.00 FEET; THENCE S34°21'11"W 43.31 FEET TO AN EXISTING IRON REBAR AT THE AT THE WEST LINE OF SAID FIVE (5); THENCE N33°14'34"E 64.28 FEET TO THE POINT OF BEGINNING, CONTAINING 27.0 SQUARE FEET, MORE OR LESS.

GIS Approved
05/20/2026

SURVEY DESCRIPTION – UTILITY EASEMENT VACATION AREA

A PART OF LOT SIX NUMBERED (6), CHARLESTON PLACE, A PLANNED UNIT DEVELOPMENT TO THE CITY OF FAYETTEVILLE, AS SHOWN IN PLAT BOOK 16 AT PAGE 36 OF THE LAND RECORDS OF WASHINGTON COUNTY, ARKANSAS, BEING DESCRIBED AS FOLLOWS: COMMENCING AT THE SOUTHEAST CORNER OF SAID LOT SIX (6), SAID POINT BEING AN EXISTING IRON REBAR; THENCE N33°14'34"E 64.28 FEET TO AN EXISTING IRON REBAR AT THE NORTHEAST CORNER OF SAID LOT SIX (6), SAID POINT BEING ON A 175.00 FOOT RADIUS CURVE CONCAVE TO THE NORTHEAST; THENCE NORTHWESTERLY 33.42 FEET ALONG SAID CURVE AND RIGHT-OF-WAY LINE OF AMBER DRIVE, THE CHORD FOR WHICH BEING N54°44'01"E 33.37 FEET, TO THE POINT OF TANGENCY; THENCE N49°40'22"W 17.02 FEET ALONG SAID RIGHT-OF-WAY LINE TO A POINT; THENCE LEAVING SAID RIGHT-OF-WAY LINE, S40°19'38"W 12.50 FEET TO THE TRUE POINT OF BEGINNING, SAID POINT BEING THE INTERSECTION OF THE NORTHEASTERLY SIDE OF AN EXISTING HOUSE AND THE SOUTHERLY BOUNDARY OF A TWELVE AND ONE-HALF (12.50) FOOT WIDE BUILDING SETBACK AND UTILITY EASEMENT; THENCE N49°40'22"W 12.92 FEET ALONG SAID SETBACK AND UTILITY BOUNDARY TO THE BEGINNING OF A 12.50 FOOT RADIUS CURVE CONCAVE TO THE SOUTHWEST; THENCE NORTHWESTERLY 2.60 FEET ALONG SAID SETBACK AND UTILITY EASEMENT BOUNDARY, THE CHORD FOR WHICH BEING N55°11'44"W 2.59 FEET, TO A POINT ON THE NORTHWESTERLY SIDE OF A TWO STORY COVERED PORCH; THENCE LEAVING SAID BUILDING SETBACK AND UTILITY EASEMENT BOUNDARY, N46°34'15"E 2.25 FEET TO THE NORTHWEST CORNER OF SAID COVERED PORCH; THENCE S42°14'08"E 15.38 FEET ALONG THE NORTHEASTERLY SIDE OF SAID PORCH AND HOUSE TO THE POINT OF BEGINNING, CONTAINING 15.60 SQUARE FEET, MORE OR LESS.

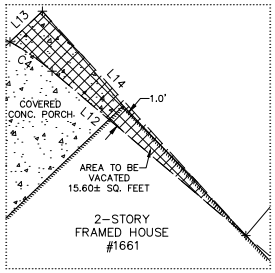

VACATION AREA DETAIL

LEGEND

AC UNIT	FIBER OPTICS SIGN	SANITARY SEWER MANHOLE
BACKFLOW VALVE	FIRE HYDRANT	SATELLITE DISH
BOLLARD POST	FIRE SPRINKLER	SEPTIC TANK LID
BUGGY AXLE	FLAG POLE	SET ALUMINUM MONUMENT
CABLE BOX	GAS LINE SIGN	SET COTTON SPINDLE
CABLE TV PEDESTAL	GAS METER	SET STAKE ON LINE
CHISELED 'X'	GAS STUB	SET 1/2" IRON REBAR
COMPUTED POINT	GAS REGULATOR	STATE MONUMENT
CONC. MONUMENT	GENERATOR	STONE MONUMENT
C.O.E. MONUMENT	GROUND LIGHT	STORM DRAIN MANHOLE
DOWN GUY	IRRIG. CONTROL VALVE	STREET SIGN
DRAIN GRATE	JUNCTION BOX	T-POST
ELECTRIC BOX	LAMP POST	TELEPHONE BOX
ELECTRIC METER	MAIL BOX	TELEPHONE PEDESTAL
ELECTRIC PEDESTAL	PARKING SIGN	TEMPORARY BENCHMARK
EXIST. ALUM. CAPPED MON.	PAY PHONE	TRAFFIC SIGNAL BOX
EXIST. COTTON SPINDLE	POWER POLE	TRANSFORMER BOX
EXISTING IRON PIPE	PROPANE TANK	TREE
EXISTING IRON REBAR	RAILROAD SPIKE	WATER LINE SIGN
EXISTING NAIL	READING	WATER METER
FENCE POST	RIGHT OF WAY MONUMENT	WATER SPIGOT
EXIST. IRON IN CONCRETE	SANITARY SEWER CLEANOUT	WATER VALVE

CENTERLINE ROAD	EASEMENT LINE
RIGHT-OF-WAY LINE	BUILDING SETBACK LINE
BARBED-WIRE FENCE	OVERHEAD ELECTRIC LINE
CHAIN-LINKED FENCE	UNDERGROUND ELECTRIC LINE
PRIVACY FENCE	GAS LINE
WIRE FENCE	SANITARY SEWER LINE
MAJOR CONTOUR INTERVAL	STORM SEWER LINE
MINOR CONTOUR INTERVAL	TELEPHONE LINE
BUILDING LINE	WATER LINE
FIBER-OPTICS LINE	PROPERTY LINE
DITCH/WATER LINE	

VAC-2026-00XX

SHEET 1 OF 1

I-49/Exit 80

REVISIONS		
DATE	DESCRIPTION	BY

ARA
118 S. COLLEGE AVENUE
FAYETTEVILLE, ARKANSAS 72701
479.444.6784
1-888.549.7581
arolandsurvey@gmail.com

Alan Reid & ASSOCIATES
PROFESSIONAL LAND SURVEYORS
BOUNDARY
TOPO

DRAFTSMAN	DF
DATE	05/07/2026
CHECKED	–
SCALE	1" = 20'
SHEET SIZE	18"x 24"

BARBARA COLLEEN LOVIN
1661 E. CYPRESS LN, FAYETTEVILLE, AR 72703
PARCEL NO. 765-21863-000

EASEMENT/B.S.B. VACATION – FAYETTEVILLE, ARKANSAS

CITY OF FAYETTEVILLE ARKANSAS

CITY COUNCIL MEMO
2026-1946

MEETING OF JUNE 16, 2026

TO: Mayor Rawn and City Council

THROUGH:

FROM: Mike Reynolds, Police Chief

SUBJECT: **Definition of Private Club**

RECOMMENDATION:
Staff recommends updating the definition of "private club" in city code § 111.02 to align with Arkansas Statute §3-9-202. The revised definition would state that a "private club" means "a nonprofit corporation, sole proprietorship, corporation, partnership, or limited liability company organized and existing or authorized to do business under the laws of this state."

BACKGROUND:
The Arkansas General Assembly amended the statute on what organizations qualify as a private club. Arkansas statute 3-9-222 requires the City Council to approve this application by ordinance before the establishment may seek a private club permit from the Arkansas Alcohol Beverage Control Board and operate in the City of Fayetteville. City Council approval is a prerequisite step in the state permitting process.

DISCUSSION:
The prior definition required a private club to be a nonprofit:

> "Private club means a nonprofit corporation organized and existing under the laws of this state, no part of the net revenues of which shall inure directly or indirectly to the benefit of any of its members or any other individual, except for the payment of bona fide expenses of the club's operations, conducted for some common recreational, social, patriotic, political, national, benevolent, athletic, or other nonprofit object or purpose other than the consumption of alcoholic beverages. The nonprofit corporation shall have been in existence for a period of not less than one (1) year before application/or a permit. At the time of application/or the permit, the nonprofit corporation must have not less than one hundred (100) members and, at the time of application, must own or lease, or be the holder of a buy-sell agreement or offer and acceptance, or have an option to lease a building, property, or space therein for the reasonable comfort and accommodation o.f its members and their families and guests, and restrict the use of club facilities to such persons."

The proposed definition modernizes the permitting process by allowing greater flexibility in business structures, thereby enhancing efficiency and economic viability.
Additionally, Act 762 of the Regular Session allows the Secretary of State to waive all fees associated with dissolving nonprofit corporations that currently hold private club permits, as authorized by the Act.

BUDGET/STAFF IMPACT:
A change in definition may increase private club applications. New forms and updates to the permitting process will be required to accommodate additional information.

ATTACHMENTS: 3. Staff Review Form, 4. Signed Memorandum, 5. Definition of Private Club Packet

113 West Mountain Street
Fayetteville, AR 72701
(479) 575-8323

File #: 2026-1946

AN ORDINANCE TO ALIGN THE CITY'S DEFINITION OF A PRIVATE CLUB WITH STATE LAW BY AMENDING § 111.02 DEFINITIONS WITHIN CHAPTER 111 ALCOHOLIC BEVERAGES

WHEREAS, the State of Arkansas has amended the definition of a private club found in Ark. Code Ann. § 3-9-202 and the City should amend the City Code to align with state law.

NOW THEREFORE, BE IT ORDAINED BY THE CITY COUNCIL OF THE CITY OF FAYETTEVILLE, ARKANSAS:

Section 1: That the City Council of the City of Fayetteville, Arkansas hereby repeals the definition of "Private Club" in § 111.02 **Definitions** within Chapter 111 **Alcoholic Beverages** and enacts a new definition as follows:

"Private Club" means a nonprofit corporation, sole proprietorship, corporation, partnership, or limited liability company organized and existing or authorized to do business under the laws of this state.

City of Fayetteville Staff Review Form

2026-1946

Item ID

6/16/2026

City Council Meeting Date - Agenda Item Only
N/A for Non-Agenda Item

Mike Reynolds	5/27/2026	POLICE (200)
Submitted By	**Submitted Date**	**Division / Department**

Action Recommendation:

Staff recommends updating the definition of "private club" in city code § 111.02 to align with Arkansas Statute §3-9-202. The revised definition would state that a "private club" means "a nonprofit corporation, sole proprietorship, corporation, partnership, or limited liability company organized and existing or authorized to do business under the laws of this state."

Budget Impact:

Account Number	Fund
Project Number	Project Title

Budgeted Item?	No	Total Amended Budget	$ -
		Expenses (Actual+Encum)	$ -
		Available Budget	$ -
Does item have a direct cost?	No	Item Cost	$ -
Is a Budget Amendment attached?	No	Budget Amendment	$ -
		Remaining Budget	$ -

Purchase Order Number: _____

Change Order Number: _____

Original Contract Number: _____

Previous Ordinance or Resolution # _____

Approval Date: _____

Comments:

CITY OF
FAYETTEVILLE
ARKANSAS

CITY COUNCIL MEMO

MEETING OF JUNE 16, 2026

TO: Mayor and City Council

FROM: Mike Reynolds, Chief of Police

DATE: May 15th, 2026

SUBJECT: **Definition of Private Club**

RECOMMENDATION:

Staff recommends updating the definition of "private club" in city code §111.02 to align with Arkansas Statute §3-9-202. The revised definition would state that a "private club" means *"a nonprofit corporation, sole proprietorship, corporation, partnership, or limited liability company organized and existing or authorized to do business under the laws of this state."*

BACKGROUND:

The Arkansas General Assembly amended the statute on what organizations qualify as a private club. Arkansas statute 3-9-222 requires the City Council to approve this application by ordinance before the establishment may seek a private club permit from the Arkansas Alcohol Beverage Control Board and operate in the City of Fayetteville. City Council approval is a prerequisite step in the state permitting process.

DISCUSSION:

The prior definition required a private club to be a nonprofit:

> *"Private club means a nonprofit corporation organized and existing under the laws of this state, no part of the net revenues of which shall inure directly or indirectly to the benefit of any of its members or any other individual, except for the payment of bona fide expenses of the club's operations, conducted for some common recreational, social, patriotic, political, national, benevolent, athletic, or other nonprofit object or purpose other than the consumption of alcoholic beverages. The nonprofit corporation shall have been in existence for a period of not less than one (1) year before application for a permit. At the time of application for the permit, the nonprofit corporation must have not less than one hundred (100) members and, at the time of application, must own or lease, or be the holder of a buy-sell agreement or offer and acceptance, or have an option to lease a building, property, or space therein for the reasonable comfort and*

accommodation of its members and their families and guests, and restrict the use of club facilities to such persons."

The proposed definition modernizes the permitting process by allowing greater flexibility in business structures, thereby enhancing efficiency and economic viability.

Additionally, Act 762 of the Regular Session allows the Secretary of State to waive all fees associated with dissolving nonprofit corporations that currently hold private club permits, as authorized by the Act.

BUDGET/STAFF IMPACT:

A change in definition may increase private club applications. New forms and updates to the permitting process will be required to accommodate additional information.

Attachments:

City Code §111.02 (proposed definition)
Arkansas Code § 3-9-222
Act 762

3-9-222. Private clubs — Procedure for obtaining permit.

(a)

(1) Application for a permit to operate as a private club may be made to the governing body of the county or municipality in which the private club seeks to be located.

(2) If the governing body of the county or municipality approves by ordinance an application for a permit to operate as a private club under subdivision (a)(1) of this section, the Alcoholic Beverage Control Division may issue a permit to operate as a private club to the applicant for the proposed location.

(b)

(1) The application for a private club shall be submitted to the division and accompanied by an annual permit fee of one thousand five hundred dollars ($1,500).

(2) The application for a bed and breakfast private club shall be submitted to the division and accompanied by an annual permit fee of seventy-five dollars ($75.00).

(3) In an area in which the sale of intoxicating liquor has not been authorized by local option as provided under § 3-8-201 et seq., the application for a private club permit shall be submitted to the division and accompanied by an additional application fee of one thousand five hundred dollars ($1,500).

(c)

(1) After filing an acceptable application with the Director of the Alcoholic Beverage Control Division, the applicant shall cause to be published at least one (1) time each week for four (4) consecutive weeks in a legal newspaper of general circulation in the city in which the premises are situated or, if the premises are not in a city, in a newspaper of general circulation for the locality where the business is to be conducted, a notice that the applicant has applied for a permit to dispense alcoholic beverages on the premises.

(2) The notice shall be in such form as the director shall prescribe by rule or order and shall be verified.

(3) The notice shall give the names of the managing agent or the name of the business owner and shall state:

(A) That the manager, the owner, at least one (1) partner, or the majority stockholder is a citizen of Arkansas;

(B) That he or she is of good moral character;

(C) That he or she has never been convicted of a felony or had a license to sell or dispense alcoholic beverages revoked within the five (5) years preceding the date of the notice; and

(D) That he or she has never been convicted of violating the laws of this state or of any other state governing the sale or dispensing of alcoholic beverages.

(d)

(1) Within five (5) days after filing an application for a permit to dispense alcoholic beverages on the premises, a notice of the application shall be posted in a conspicuous place at the entrance to the premises.

(2) The applicant shall notify the director of the date when the notice is first posted.

(3) No permit shall be issued to any applicant until proper notice has been so posted on the premises for at least thirty (30) consecutive days.

(4)

(A) The notice shall be in such form as the director shall prescribe by rule or order.

(B) The notice shall be:

(i) At least eleven inches (11") in width and seventeen inches (17") in height; and

(ii) Printed in black lettering on a yellow background.

(e)

(1) Upon receipt by the director of an application for a permit, written notice thereof, which shall include a copy of the application, the application shall immediately be mailed by the director to the sheriff, chief of police, if located within a city, prosecuting attorney of the locality in which the premises are situated, and city board of directors or other governing body of the city in which the premises are situated if within an incorporated area. The provisions of this section shall be retroactive to July 28, 1995.

(2) No license shall be issued by the director until at least thirty (30) days have passed from the mailing by the director of the notices required by this section.

(3) Upon receipt by the director within the thirty (30) days of a protest against the issuance of a permit by a governing official of the city or county to whom the notice of an application for permit has been mailed, the director shall not issue the license until he or she has held a public hearing.

(f) Upon the director's determining that the applicant is qualified hereunder and that the application is in the public interest, a permit may be issued as authorized in this section.

History

Acts 1969, No. 132, § 10; 1975 (Extended Sess., 1976), No. 1016, § 1; A.S.A. 1947, § 48-1410; reen. Acts 1987, No. 949, § 1; 1989, No. 297, § 1; 1997, No. 1010, § 3; 1997, No. 1060, § 3; 1999, No. 1063, § 3; 2007, No. 735, § 3; 2009, No. 294, § 22; 2009, No. 763, § 5; 2017, No. 1112, § 1; 2025, No. 421, § 4; 2025, No. 762, § 13.

Arkansas Code of 1987 Annotated Official Edition
Copyright © 2026 by the State of Arkansas All rights reserved

Created with a trial version of Syncfusion Essential Docs.

111.02 Definitions

For the purposes of this chapter, the following definitions shall apply unless the context clearly indicates or requires a different meaning. Words and phrases not specifically defined in this chapter shall have the meanings assigned by Title Three of the Arkansas Code Annotated and/or the Arkansas Alcoholic Beverage Control Division Regulations.

Alcoholic beverages means all intoxicating liquors of any sort, other than beer and wine.

Beer means any fermented liquor made from malt or any similar substance therefor and having an alcohol content not in excess of 5% or less than one-half (½) of 1% by weight.

City means the City of Fayetteville, Arkansas.

Controlled beverages means all beverages of any kind subject to regulation under any alcoholic beverage control law of the State of Arkansas and this chapter.

Hotel means every building or other structure commonly referred to as a hotel, motel, motor lodge, or by similar name, which is kept, used, maintained, advertised, and held out to the public to be a place where food is actually served and consumed and sleeping accommodations are offered for adequate pay to travelers or guests, whether transient, permanent, or residential, in which fifty (50) or more rooms are used for the sleeping accommodations of such guests and having one or more public dining rooms with adequate and sanitary kitchen facilities, and a seating capacity for at least fifty (50) persons, where meals are regularly served to such guests, such sleeping accommodations and dining room being conducted in the same building or in separate buildings or structures used in connection therewith that are on the same premises and are a part of the hotel operation.

Large attendance facility means a facility housing convention center activity, or tourism activity, or trade show and product display and related meeting activity, or any similar large meeting or attendance activity, and, either itself or through one (1) or more independent contractors, complies with all of the following:

(1) Actually serves full and complete meals and food on the premises;

(2) Has one (1) or more places for food service on premises with a seating capacity for not less than five hundred (500) people;

(3) Employs a sufficient number and kind of employees to serve meals and food on the premises capable of handling at least five hundred (500) people; and

(4) Serves controlled beverages on premises at one (1) or more places only on days that meals and food are served at one (1) or more places on premises.

Light wine means the fermented juices of grapes, berries, or fruits and any other mixture containing the fermented juice of grapes, berries, or fruits, having an alcoholic content between one-half (½) of 1% and 5% alcohol by weight.

Malt beverage products means any liquor brewed from the fermented juices of grain having an alcoholic content of not less than 5% nor more than 21% by weight.

Malt liquor means liquor brewed from the fermented juices of grain.

Microbrewery-restaurant means any establishment in which beer, containing not in excess of 5% of alcohol by weight, and/or malt beverage products, containing not in excess of 21% of alcohol by weight, are both brewed and sold at retail in a restaurant setting under the same ownership and in the same building or attached buildings.

On-premises consumption means the sale of alcoholic beverages by the drink or in broken or unsealed containers for consumption on the premises where sold.

Created with a trial version of Syncfusion Essential Docs.

Permit means any authorization issued by the Alcoholic Beverage Control Division of the State of Arkansas and/or by the city pursuant to any Arkansas Alcoholic Beverage Control Division regulation and/or this Chapter 111 of the Code of Fayetteville whether described as a permit, license or otherwise.

Permittee means the person to whom a permit has been issued.

Person means any natural person, partnership, association, corporation, syndicate, or company.

Private club means a nonprofit corporation ~~, sole proprietorship, corporation, partnership, or limited liability company organized and existing or authorized to do business under the laws of this state organized and existing under the laws of this state, no part of the net revenues of which shall inure directly or indirectly to the benefit of any of its members or any other individual, except for the payment of bona fide expenses of the club's operations, conducted for some common recreational, social, patriotic, political, national, benevolent, athletic, or other nonprofit object or purpose other than the consumption of alcoholic beverages. The nonprofit corporation shall have been in existence for a period of not less than one (1) year before application for a permit. At the time of application for the permit, the nonprofit corporation must have not less than one hundred (100) members and, at the time of application, must own or lease, or be the holder of a buy-sell agreement or offer and acceptance, or have an option to lease a building, property, or space therein for the reasonable comfort and accommodation of its members and their families and guests, and restrict the use of club facilities to such persons.~~

Restaurant means any public place or private place kept, used, maintained, advertised and held out to the public or to a private or restricted membership as a place where complete meals are actually and regularly served, such place being provided with adequate and sanitary kitchen and dining equipment and a seating capacity of at least fifty (50) people and having employed therein a sufficient number and kind of employees to prepare, cook and serve suitable food for its guests or members. At least one (1) meal per day shall be served at least five (5) days a week, with the exception of holidays, vacations and periods of redecorating. Further, on the day that alcoholic beverages are served to customers of the outlet, the outlet must also prepare and serve at least one (1) complete meal for consumption on the premises.

Retailer means any person who holds a permit under any alcoholic beverage control law of the State of Arkansas to sell at retail controlled beverages to consumers only.

Spirituous means liquor distilled from the fermented juices of grains, fruits, or vegetables containing more than 21% alcohol by weight, or any other liquids containing more than 21% alcohol by weight.

State means the State of Arkansas.

Sunday sales means the sales of alcoholic beverages on Sunday shall be limited to those businesses within the city which possess a current and valid license for the sale of alcoholic beverages issued by the Alcoholic Beverage Control Division.

Vinous means the fermented juices of fruits containing more than 5% and not more than 21% alcohol by weight.

Wholesaler and distributor means any person who holds a permit under any alcoholic beverage control law of the State of Arkansas to purchase controlled beverages from a manufacturer or importer and to sell such controlled beverages to retailers only.

(Code 1991, §111.02; Ord. No. 4042, §1, 6-17-97; Ord. No. 5994, §1, 9-5-17)

ORDINANCE NO. _____

AN ORDINANCE TO ALIGN THE CITY'S DEFINITION OF A PRIVATE CLUB WITH STATE LAW BY AMENDING § 111.02 **DEFINITIONS** WITHIN CHAPTER 111 **ALCOHOLIC BEVERAGES**

WHEREAS, the State of Arkansas has amended the definition of a private club found in Ark. Code Ann. § 3-9-202 and the Alcoholic Beverage Control regulations and the.

NOW THEREFORE, BE IT ORDAINED BY THE CITY COUNCIL OF THE CITY OF FAYETTEVILLE, ARKANSAS:

Section 1: That the City Council of the City of Fayetteville, Arkansas hereby repeals the definition of "Private Club" in § 111.02 **Definitions** within Chapter 111 **Alcoholic Beverages** and enacts a new definition as follows:

"Private Club" means a nonprofit corporation, sole proprietorship, corporation, partnership, or limited liability company organized and existing or authorized to do business under the laws of this state.

State of Arkansas
95th General Assembly
Regular Session, 2025

As Engrossed: H4/7/25

A Bill

SENATE BILL 523

By: Senator Irvin
By: Representative Dalby

For An Act To Be Entitled

AN ACT TO AMEND THE LAW REGARDING ALCOHOLIC BEVERAGES; TO REMOVE THE REQUIREMENT THAT A PRIVATE CLUB BE A NONPROFIT ORGANIZATION; AND FOR OTHER PURPOSES.

Subtitle

TO AMEND THE LAW REGARDING ALCOHOLIC BEVERAGES; AND TO REMOVE THE REQUIREMENT THAT A PRIVATE CLUB BE A NONPROFIT ORGANIZATION.

BE IT ENACTED BY THE GENERAL ASSEMBLY OF THE STATE OF ARKANSAS:

SECTION 1. *DO NOT CODIFY.* *Legislative* findings.

The General Assembly finds that:

(1) The regulatory framework governing private clubs in this state needs to be modernized to reflect evolving economic realities;

(2) Permitting flexibility in business structures can enhance efficiency and economic viability and encourage broader investment and growth;

(3) Allowing private clubs in dry counties to operate through diverse business entities, including without limitation corporations, partnerships, and limited liability companies, will foster competitive fairness, stimulate local economic development, and attract increased investment by offering businesses greater operational flexibility; and

(4) Permitting private clubs in dry counties to function through any legally recognized business entity structure, including without limitation

corporations, partnerships, limited liability companies, or sole proprietorships, aligns regulatory practices with modern business practices and enhances the state's overall economic competitiveness.

SECTION 2. Arkansas Code § 3-4-108(b), concerning the selling of alcoholic beverages with a food purchase by a private club, is amended to read as follows:

(b) A private club holding a valid alcoholic beverage permit may serve alcoholic beverages in a sealed container during legal operating hours directly to a ~~member or a~~ guest ~~of a member of the private club~~ who is twenty-one (21) years of age or older along with the purchase of a meal as defined in § 3-9-202:

(1) At the point of sale to be consumed off-premises;

(2) At the drive-through to be consumed off-premises;

(3) At the curbside to be consumed off-premises; or

(4) Delivered to a consumer at a location off-premises.

SECTION 3. Arkansas Code § 3-4-405(a)(18)-(20), concerning certain actions by private clubs that are Class C permit violations, are repealed.

~~*(18) Failure to maintain membership books or properly maintain guestbooks by a private club;*~~

~~*(19) Allowing an unauthorized guest in a private club;*~~

~~*(20) Dispensing to nonmembers or nonguests by a private club;*~~

SECTION 4. Arkansas Code § 3-5-1901(7), concerning the definition of a microbrewery-restaurant private club" under the law regarding microbrewery-restaurant private club permits, is amended to read as follows:

(7) "Microbrewery-restaurant private club" means a nonprofit organization, corporation, partnership, limited liability company, or sole-propriertorship organized and existing or authorized to do business under the laws of this state that:

~~(A) Is~~ is both a microbrewery and a restaurant;

~~(B) Has members, which are not directly or indirectly benefitted by the entity's net revenues;~~

~~(C) Exists for some common recreational, social, patriotic, political, national, benevolent, athletic, community hospitality,~~

~~professional association, entertainment, or other object or purpose other than the consumption of alcoholic beverages; and~~

~~(D) Has existed for at least one (1) year~~;

SECTION *5*. Arkansas Code § 3-5-1902 is amended to read as follows:

3-5-1902. Microbrewery-restaurant private club.

(a) A microbrewery-restaurant private club applicant shall be an entity organized and existing or authorized to do business under the laws of this state before applying for a microbrewery-restaurant private club permit as prescribed in this subchapter.

(b) ~~The net revenues of the microbrewery-restaurant private club shall not directly or indirectly benefit its members, except for the payment of bona fide expenses of the microbrewery-restaurant private club's operations.~~

~~(c) Activities at the microbrewery-restaurant private club shall be conducted for some common recreational, social, patriotic, political, national, benevolent, athletic, community hospitality, professional association, entertainment, or other object or purpose and not solely for the consumption of alcoholic beverages.~~

~~(d)(1)~~ At the time of application for a microbrewery-restaurant private club permit, the entity shall own or lease, be the holder of a buy-sell agreement or offer and acceptance, or have an option to lease a building, property, or space for the reasonable comfort and accommodation of its ~~members and the families and~~ guests ~~of its members~~.

~~(2) The microbrewery-restaurant private club shall restrict the use of club facilities to its members and the families and guests of its members.~~

~~(e) For purposes of this subchapter, a person is a member of the microbrewery-restaurant private club only upon ordering an alcoholic beverage as defined in § 3-5-1901.~~

~~(f)~~(c) If the entity holding a microbrewery-restaurant private club permit additionally holds another alcoholic beverage permit, the hours of operation authorized for the microbrewery-restaurant private club apply to all permits of the entity.

SECTION *6*. Arkansas Code § 3-5-1904(a)(4) and (5), concerning the selling and serving certain alcoholic beverages on-premises by the holder of

a microbrewery-restaurant private club permit are amended to read as follows:

(4) Sell on the premises beer, malt beverage, or hard cider manufactured by the microbrewery-restaurant private club or commonly owned facility to a ~~member~~ guest for on-premises consumption during legal operating hours;

(5) Serve to a ~~member~~ guest on-premises complimentary samples of beer, malt beverages, or hard cider produced by the microbrewery-restaurant private club;

SECTION *7.* Arkansas Code § 3-5-1904(e)(3), concerning advertising of a social function by a microbrewery-restaurant private club, is amended to read as follows:

(3) The advertising for the social function shall be preceded by ~~the words "Notice to Members" and~~ the name of the club or organization sponsoring the social activity.

SECTION *8.* Arkansas Code § 3-5-1905(a), concerning sales prohibited by a microbrewery-restaurant private club, is amended to read as follows:

(a) A microbrewery-restaurant private club permitted under this subchapter shall not sell alcoholic beverages either by the package or by the drink to a guest~~:~~

~~(1) Nonmember for on-premises or off-premises consumption; or~~

~~(2) Member~~ for off-premises consumption.

SECTION *9.* Arkansas Code § 3-5-1906(1), concerning the permit fee for a microbrewery-restaurant private club, is amended to read as follows:

(1) Pay the applicable city or county permit fees and barrelage or taxes and shall pay a state permitting fee to the Alcoholic Beverage Control Division of seven hundred fifty dollars ($750) per fiscal year to manufacture and sell to ~~members~~ guests its beer, malt beverages, and hard cider for on-premises consumption and to sell to ~~members~~ guests other beer, malt beverages, hard cider, and spirituous liquor purchased from a permitted retailer for on-premises consumption;

SECTION *10.* Arkansas Code § 3-5-1907(a)(3), concerning the information required for an application of an applicant that is reapplying for a

microbrewery-restaurant private club permit within two (2) years of denial, is amended to read as follows:

(3) The petition on which the signatures are obtained under this section shall state clearly that the purpose of the petition is to obtain an alcoholic beverage permit for a microbrewery-restaurant private club and to serve alcoholic beverages to ~~members~~ guests.

SECTION 11. Arkansas Code § 3-9-202(14), as amended by Acts 2025, No. 421, § 3, concerning the definition of a private club, is amended to read as follows:

(14)~~(A)(i)~~ "Private club" means~~, except as provided in subdivision (14)(D) of this section,~~ a nonprofit corporation, sole-proprietorship, corporation, partnership, or limited liability company organized and existing or authorized to do business under the laws of this state~~, no part of the net revenues of which shall inure directly or indirectly to the benefit of any of its members or any other individual, except for the payment of bona fide expenses of the club's operations, and which is conducted for some common recreational, social, patriotic, political, national, benevolent, athletic, community hospitality, professional association, entertainment, or other nonprofit object or purpose other than the consumption of alcoholic beverages.

~~(ii) The nonprofit corporation shall have been in existence for a period of not less than one (1) year before applying for a permit, as prescribed in this subchapter.~~

~~(iii) At the time of application for the permit, the nonprofit corporation must have not fewer than one hundred (100) members and at the time of application must own or lease, be the holder of a buy-sell agreement or offer and acceptance, or have an option to lease a building, property, or space therein for the reasonable comfort and accommodation of its members and their families and guests and restrict the use of club facilities to those persons.~~

~~(B) For purposes of this subdivision (14), a person shall be required to become a member of the private club in any wet area of the state only upon ordering an alcoholic beverage as defined under subdivision (1) of this section.~~

~~(C) Furthermore, where the business entity that holds a~~

~~private club permit additionally holds a retail beer permit, retail wine for consumption on the premises permit, or cafe or restaurant wine permit, the hours of operation authorized for the private club shall likewise apply to all permits of the business entity.~~

~~(D) A corporation, partnership, individual, or limited liability company applying for a hotel, restaurant, or large-event facility private club permit under § 3-9-221(a)(3)(B) is not required to form a nonprofit corporation but shall otherwise comply with all requirements of § 3-9-240;~~

SECTION 12. Arkansas Code § 3-9-221, as amended by Acts 2025, No. 421, § 3, is amended to read as follows:

3-9-221. Private clubs — Exception from alcoholic beverage laws.

(a) The General Assembly recognizes that:

~~(1) Many individuals in this state serve mixed drinks containing alcoholic beverages to their friends and guests in the privacy of their homes and, in addition, that many individuals associated together in private nonprofit corporations established for fraternal, patriotic, recreational, political, social, or other mutual purposes as authorized by law, established not for pecuniary gain, have provided for their mutual convenience and for the preparation and serving to themselves and their guests mixed drinks prepared from alcoholic beverages owned by the members individually or in common under a so-called "locker", "pool", or "revolving fund" system;~~

~~(2) Many individuals travel to this state to assemble at regional meetings and conventions to associate with other individuals who are members of professional and social organizations and that:~~

~~(A) Many of the restaurants and entertainment facilities used for the meetings and conventions promote the hospitality of the host communities where the restaurants, convention, and entertainment facilities are located;~~

~~(B) Many of the host organizations plan to serve mixed drinks containing alcoholic beverages to their friends and guests at these meetings and while entertaining and dining during these conventions; and~~

~~(C) Many of the host communities have individuals who have associated together in private nonprofit corporations established for recreational, social, community hospitality, professional association,~~

~~entertainment, or other mutual purposes established, not for pecuniary gain, but for their mutual convenience and to provide for the preparation and serving to themselves and their guests mixed drinks prepared from alcoholic beverages owned by the members individually or in common under a so-called locker, pool, or revolving fund system; and~~

~~(3)(A)(i)~~(1)(A) ~~That there~~ There are a number of counties or parts of counties where the public retail sale of intoxicating liquors has not been approved by the voters.

~~(ii)~~(B) However, within those counties or parts of counties there are significant developments of tourism facilities and large-event facilities that promote the economic development of the state~~.~~;

~~(B)~~(2) To ensure that tourism and large-event facilities as well as other associated activities are allowed to exist to promote the economic development in the state, a new hotel~~, restaurant,~~ or large-event facility private club permit, for use in those places where the public retail sale of intoxicating liquors is not authorized, should be created~~.~~;

~~(C)~~(3) These permits are necessary so that persons visiting hotels~~, restaurants,~~ or large-event facilities in these areas will be able to enjoy the amenities that a person might find in other states~~.~~;

~~(D)~~(4) This additional permit will enhance the experience of going to hotels~~, restaurants,~~ or large-event facilities that may display items of historic interest, contain extensive art collections, or host musical or dramatic presentations~~.~~; and

~~(E)~~(5) Further, since the counties or parts of counties in which these hotels~~, restaurants,~~ or large-event facilities will be located do not allow the open public retail sale of intoxicating liquors, the hotel facilities~~, restaurants,~~ or large-event facilities should be allowed to offer alcoholic beverages to guests.

(b)(1) In order to clarify the alcoholic beverage control laws of this state and to regulate and prohibit the sale of alcoholic beverages in violation of the provisions of this subchapter and other applicable alcoholic beverage control laws of this state, the General Assembly determines that the preparation, mixing, and serving of mixed drinks, beer, and wine for consumption only on the premises of a private club as defined in ~~§ 3-9-202(14)~~ § 3-9-202 ~~by the members thereof and their guests~~ and the making of a charge for such services shall not be deemed to be a sale or be in violation

of any law of this state prohibiting the manufacture, sale, barter, loan, or giving away of intoxicating liquor whenever:

(A) ~~The~~ If the private club permittee is a nonprofit organization, the alcoholic beverages, beer, and wine ~~so~~ consumed ~~have been~~ may be furnished or drawn from private stocks thereof belonging to ~~such~~ the members, individually or in common under a so-called locker, pool, or revolving fund system ~~and are~~ that is replenished only at the expense of ~~such~~ the members; and

(B) The private club has acquired a permit from the Alcoholic Beverage Control Board, in ~~such~~ the form as the board may appropriately determine.

(2)(A) A private club may serve any alcoholic beverage ~~furnished or drawn under the provisions of subdivision (b)(1) of this section~~ on the golf course on which the private club is located when the private club is hosting a professional golf tournament or other charitable golf tournament sponsored by a charitable organization described in 26 U.S.C. § 501(c)(3) and the Director of the Alcoholic Beverage Control Division has been notified by the private club at least sixty (60) calendar days prior to the beginning of the event.

(B) Persons attending the event may purchase alcoholic beverages from the private club ~~shall be deemed guests of the private club, and the club may serve the alcoholic beverages to the guests for cash~~.

(C) The director may promulgate rules he or she deems necessary to implement this subdivision (b)(2).

(c) In order to clarify the alcoholic beverage control laws of this state and to regulate and prohibit the sale of alcoholic beverages in violation of the provisions of this subchapter and other applicable alcoholic beverage control laws of this state, the General Assembly determines that the preparation, mixing, and serving of wine and beer for consumption only by the lodging guests on the premises of a bed and breakfast private club as defined in ~~§ 3-9-202(2)~~§ 3-9-202 and the making of a charge for ~~such~~ the services shall not be deemed to be a sale or to be in violation of any law of this state prohibiting the manufacture, sale, barter, loan, or giving away of intoxicating liquor whenever:

(1) ~~The wine and beer so consumed have been furnished or drawn from private stocks belonging to an owner of the bed and breakfast private~~

~~*club and are replenished only at the expense of such owner;*~~

~~*(2)*~~ *The wine and beer consumed must have been purchased in an Arkansas licensed retail alcoholic beverage store, as authorized by the director;*

~~*(3)*~~*(2) The average annual volume of wine and beer consumed shall not exceed three gallons (3 gals.) per month per guest room; and*

~~*(4)*~~*(3) The bed and breakfast private club has acquired a permit from the board in such form as the board may appropriately determine.*

SECTION 13. Arkansas Code § 3-9-222(c)(3), as amended by Acts 2025, No. 421, § 4, concerning the contents of the notice required to be published by an applicant for a private club permit, is amended to read as follows:

(3) The notice shall give the names of the managing agent ~~*and the nonprofit corporation*~~ *or*~~*, in the case of a bed and breakfast private club,*~~ *the name of the business owner*~~*,*~~ *and shall state:*

(A) That the manager~~*, or in the case of a bed and breakfast private club or a hotel, restaurant, or large-event facility private club*~~*, the owner, at least one (1) partner, or the majority stockholder is a citizen of Arkansas;*

(B) That he or she is of good moral character;

(C) That he or she has never been convicted of a felony or had a license to sell or dispense alcoholic beverages revoked within the five (5) years preceding the date of the notice; and

(D) That he or she has never been convicted of violating the laws of this state or of any other state governing the sale or dispensing of alcoholic beverages.

SECTION *14.* Arkansas Code § 3-9-223(b), concerning a supplemental tax on gross receipts for private clubs, is amended to read as follows:

(b)(1) In addition, there is levied a supplemental tax of ten percent (10%) upon the gross proceeds or gross receipts derived by the private club from the charges to members or guests for the preparation and serving of mixed drinks or for the cooling and serving of beer and wine~~, drawn from the private stocks of the members as provided in § 3-9-221,~~ for consumption only on the premises where served.

(2) In addition to the tax levied under subdivision (b)(1) of

this section, a supplemental tax of four percent (4%) is levied on the gross proceeds or gross receipts derived by the private club from the charges to members or guests for the preparation and serving of mixed drinks ~~drawn from the private stocks of the members as provided in § 3-9-221~~ for consumption only on the premises where served.

SECTION *15.* Arkansas Code § 3-9-223(e), concerning the passing on of taxes prescribed on a private club, is amended to read as follows:

(e) The taxes herein prescribed may be passed on to the members or guests.

SECTION *16.* Arkansas Code § 3-9-224 is repealed.

~~3-9-224. Private clubs – Sales prohibited.~~

~~(a) No private club permitted hereunder shall sell alcoholic beverages either by the package or drink.~~

~~(b) Alcoholic beverages, beer, and wine owned by members may be stored on the premises of the club.~~

~~(c) If any permittee shall sell, barter, loan, or give away any intoxicating liquor in violation of this subchapter or other alcoholic beverage control laws of this state, the permit of the club shall be revoked.~~

SECTION 17. Arkansas Code § 3-9-226(b)(2), concerning the prohibition on advertising or promoting the consumption of alcoholic beverages by private clubs, is amended to read as follows:

(2) The prohibition on advertising or promoting the consumption of alcoholic beverages under subdivision (b)(1) of this section does not require a private club to block visibility through the private club's windows, ~~or~~ doors, or barriers to prevent the general public from viewing patrons consuming alcoholic beverages, including without limitation through the use of window tinting.

SECTION 18. Arkansas Code § 3-9-226(c)(3), concerning the requirement that advertising by a private club for a social function contain a "notice to members", is repealed.

~~(3) The advertising for the social function shall be preceded by the words "Notice to Members" and the name of the club or organization~~

~~sponsoring such social activity.~~

SECTION *19.* Arkansas Code § 3-9-226, concerning advertising by a private club, is amended to add an additional subdivision to read as follows:

(d) This section shall not apply to a private club permit holder operating under substantially the same trade name in both wet and dry territories provided that the advertising is:

(1) Not directed exclusively toward a dry territory; and

(2) Otherwise compliant with applicable law.

SECTION 20. Arkansas Code § 3-9-240, as amended by Acts 2025, No. 421, § 5, is amended to read as follows:

3-9-240. Hotel~~, restaurant,~~ or large-event facility private club permit.

(a)(1) An application for a hotel~~, restaurant,~~ or large-event facility private club permit shall be in writing and shall provide information concerning the applicant for the hotel~~, restaurant,~~ or large-event facility private club permit and the premises to be used by the applicant as the Director of the Alcoholic Beverage Control Division requires.

(2) A hotel~~, restaurant,~~ or large-event facility private club permit may be issued only in a county or a territory of a county that does not allow the public retail sale of intoxicating liquors as provided under § 3-8-201.

(3) A hotel~~, restaurant,~~ or large-event facility private club permit may be issued to a corporation, partnership, individual, or limited liability company.

(b) The application for a hotel~~, restaurant,~~ or large-event facility private club permit shall be accompanied by a check or money order for the amount required by this section for the hotel~~, restaurant,~~ or large-event facility private club permit.

(c) A hotel~~, restaurant,~~ or large-event facility private club permit application shall contain a description of the premises permitted and provide proof that the space has at least:

(1) Eighty (80) lodging rooms and five thousand square feet (5,000 sq. ft.) of public meeting, banquet, or restaurant space from a hotel; or

(2) Ten thousand square feet (10,000 sq. ft.) of interior or exterior public meeting, banquet, exhibit hall, or restaurant space from a large-event facility~~; or~~

~~*(3) Seating capacity for not fewer than one hundred (100) people in the restaurant that otherwise complies with the requirements of § 3-9-202(16).*~~

(d) If the director grants an application for a hotel~~, restaurant,~~ or large-event facility private club permit, he or she shall issue a hotel~~, restaurant,~~ or large-event facility private club permit in a form as determined by the rules of the Alcoholic Beverage Control Division.

(e)(1) A hotel~~, restaurant,~~ or large-event facility private club permit authorizes the dispensing, service, and consumption of alcoholic beverages by and to guests on the premises of a hotel~~, restaurant,~~ or large-event facility for on-premises consumption.

(2) The areas of a hotel~~, restaurant,~~ or large-event facility that may be utilized by a hotel~~, restaurant,~~ or large-event facility private club permittee for purposes of a hotel~~, restaurant,~~ or large-event facility private club permit include without limitation:

(A) Sleeping rooms;

(B) Pool-side bars;

(C) Banquet facilities;

(D) Restaurants;

(E) Lobbies;

(F) Exhibit halls;

(G) Patios; and

(H) Outdoor gardens.

(3) Guests of the hotel or large-event facility private club permittee that holds a hotel~~, restaurant,~~ or large-event facility private club permit may move from one area to another area designated under subdivision (e)(2) of this section while consuming alcoholic beverages.

(f)(1) A person must be a guest of the hotel~~, restaurant,~~ or large-event facility private club permittee to consume or possess alcoholic beverages dispensed by the hotel~~, restaurant,~~ or large-event facility private club permittee.

(2) Persons under twenty-one (21) years of age may be allowed on the premises of the hotel~~, restaurant,~~ or large-event facility private club

permittee.

(3)(A) A hotel holding a hotel~~, restaurant,~~ or large-event facility private club permit under this section may use room service to serve the alcoholic beverage.

(B) The hotel holding a hotel~~, restaurant,~~ or large-event facility private club permit may stock a sleeping room with alcoholic beverages, and the hotel or large-event facility private club permittee through the hotel's employees shall inventory the alcoholic beverages in the sleeping room.

(C) Sleeping rooms that are solely occupied by persons twenty (20) years of age and under shall not receive alcoholic beverages through room service or be stocked with alcoholic beverages.

(g)(1)(A) For a hotel ~~and a restaurant~~, the application and renewal fee for a hotel~~, restaurant,~~ or large-event facility private club permit is one thousand five hundred dollars ($1,500) per year payable on or before June 30 of each calendar year for the fiscal year beginning July 1.

(B) In an area in which the sale of intoxicating liquor has not been authorized by local option as provided under § 3-8-201 et seq., the application for a hotel~~, restaurant,~~ or large-event facility private club permit shall be accompanied by an additional application fee of one thousand five hundred dollars ($1,500).

(2) The application and renewal fee for a large-event facility for a hotel~~, restaurant,~~ or large-event facility private club permit is two thousand five hundred dollars ($2,500) per year payable on or before June 30 of each calendar year for the fiscal year beginning July 1.

(h) The director shall promulgate rules to enforce this section.

SECTION *21.* DO NOT CODIFY. Transitional language.

(a) Upon the effective date of this act, a private club permit currently held by a nonprofit corporation shall, upon written request by the board of directors of the nonprofit corporation to the Alcoholic Beverage Control Division and the Alcoholic Beverage Control Enforcement Division, be transferred to a corporation, partnership, individual, or limited liability company organized and existing under or authorized to do business under the laws of this state operating at the same location.

(b) The successor entity and the entity's owners under a transfer

under subsection (a) of this section shall comply with all applicable private club permit application procedures under existing law, except that a new private club permit fee or application fee shall not be required.

(c) Upon approval of a transfer to the new entity, the board of directors of a nonprofit corporation holding a private club permit may transfer all assets of the nonprofit corporation, including without limitation all alcoholic beverage inventories, equipment, and property, to the successor business entity identified under subsection (a) of this section.

(d) For a period of five (5) years from the effective date of this act, the Secretary of State shall waive all fees associated with the dissolution of nonprofit corporations currently holding private club permits that become unnecessary due to the transfer authorized by this act.

/s/Irvin

APPROVED: 4/17/25

CITY OF FAYETTEVILLE ARKANSAS

CITY COUNCIL MEMO
2026-2001

MEETING OF JUNE 16, 2026

TO: Mayor Rawn and City Council

THROUGH: Blake Pennington, Senior Assistant City Attorney

FROM: Scott Berna, Ward 3, Position 1
Mike Wiederkehr, Ward 2, Position 2

SUBJECT: **An Ordinance to make data centers a conditional use in the City of Fayetteville.**

RECOMMENDATION:
Make data centers a conditional use in the City of Fayetteville.

BACKGROUND:
On September 5, 2023, with the passage of Ordinance 6678, the City of Fayetteville became one of the first cities to enact specific regulations for data centers in the State of Arkansas. Those initial regulations focused on the noise disturbance that can be caused by the equipment associated with data centers but they are also known to have massive water and power requirements, which can severely and negatively impact the lives of those in nearby areas served by the same utility services.

DISCUSSION:
Moving data centers from permitted uses to conditional uses in the I-2, Heavy Industrial zoning district will allow the Planning Commission to weigh the potential adverse impact data centers can have on surrounding properties and the public interest. The City of Fayetteville finds that the public interest is served by preventing the negative effects on ratepayers and utility customers that can be caused by data centers and the provisions of this Ordinance are enacted for the purpose of preserving and protecting the public health, safety, welfare and property of the residents of Fayetteville.

BUDGET/STAFF IMPACT:
N/A

ATTACHMENTS: 3. Exhibit A - New 163.20 Data Centers - clean, 4. Exhibit A - New 163.20 Data Centers - strikethrough, 5. Agenda Request Signed - Berna and Wiederkehr - Data Centers, 6. Wiederkehr Approval

113 West Mountain Street
Fayetteville, AR 72701
(479) 575-8323

File #: 2026-2001

AN ORDINANCE TO MAKE DATA CENTERS A CONDITIONAL USE IN THE CITY OF FAYETTEVILLE AND PROVIDE FOR ADDITIONAL REGULATIONS ON DATA CENTERS BY AMENDING § 161.31 DISTRICT I-2, GENERAL INDUSTRIAL, § 164.27 DATA CENTERS, § 51.001 WATER SHORTAGES, AND § 51.112 WATER SERVICE AND EXTENSION POLICY OF THE UNIFIED DEVELOPMENT CODE, AND TO DECLARE AN EMERGENCY

WHEREAS, on September 5, 2023, with the passage of Ordinance 6678, the City of Fayetteville became one of the first cities to enact specific regulations for data centers in the State of Arkansas; and

WHEREAS, those initial regulations focused on the noise disturbance that can be caused by the equipment associated with data centers but they are also known to have massive water and power requirements, which can severely and negatively impact the lives of those in nearby areas served by the same utility services; and

WHEREAS, moving data centers from permitted uses to conditional uses in the I-2, Heavy Industrial zoning district will allow the Planning Commission to weigh the potential adverse impact data centers can have on surrounding properties and the public interest; and

WHEREAS, the City of Fayetteville finds that the public interest is served by preventing the negative effects on ratepayers and utility customers that can be caused by data centers and the provisions of this Ordinance are enacted for the purpose of preserving and protecting the public health, safety, welfare and property of the residents of Fayetteville.

NOW, THEREFORE, BE IT ORDAINED BY THE CITY COUNCIL OF THE CITY OF FAYETTEVILLE, ARKANSAS:

Section 1: That the City Council of the City of Fayetteville, Arkansas hereby amends § 161.31 – **District I-2, General Industrial** of the Unified Development Code by moving Unit 47 Data Centers from subsection (B)(1) *Permitted Uses* to (B)(2) *Conditional Uses*.

Section 2: That the City Council of the City of Fayetteville, Arkansas hereby repeals § 164.27 **Data Centers** and enacts a new § 163.20 **Data Centers** as shown in Exhibit A attached hereto.

Section 3: That the City Council of the City of Fayetteville, Arkansas hereby enacts a new subsection (C)(8) in § 51.001 **Water Shortages** as follows:

"(8) *Data Centers*. The operation of a data center cooling system employing the use of potable water.

Section 4: That the City Council of the City of Fayetteville, Arkansas hereby enacts a new subsection

(D) for water extensions to data centers outside the city in § 51.112 **Water Service and Extension Policy** as follows:

"(D) *Water Extensions to Data Centers.* Water extensions to a data center as defined in § 151.01 of the Unified Development Code outside of the Fayetteville corporate limits but within the City's water service area shall not be made without the express approval of the City Council and in accordance with the following rules

(1) The data center shall provide a report addressing the following:

(a) Water Usage

i. The estimated amount of total water in acre feet that will be used by the proposed project and associated land use for a calendar year, along with a monthly breakdown of projected water demand for each month within that year.
ii. The estimated amount of water in million gallons per day that will be used by the proposed project during a typical 24-hour operational period under normal conditions, including anticipated usage patterns
iii. The estimated amount of water in million gallons per day to be used by the proposed project in a 24-hour period on its highest water consumption day.
iv. The estimated highest instantaneous flow rate in million gallons per day that will be used by the project along with the minimum, average, and maximum durations and frequencies of these flow conditions.
v. Indicate high consumption operational flexibility. Identify if high water demands can be aligned with the City's low-demand periods.
vi. The number of the proposed water meters and the size of each water meter for the proposed project.
vii. Fire flow requirements and capacity to provide fire flow for the proposed data center, as reviewed and approved by both the Fire Marshal (or the appropriate fire official with jurisdiction over the proposed site) and the Utilities Department.

(b) Water Supply

i. If the data center will be served by a public water supply, the applicant shall submit documentation from the public authority certifying that the public authority has the capacity to supply the water needed.
ii. Additionally, the applicant shall submit documentation from Beaver Water District certifying that it has sufficient current and future capacity and the needs of the data center will not adversely impact its ability to deliver water to its customers.
iii. If the data center intends to rely upon a nonpublic groundwater source or is to rely on surface water withdrawal, the applicant shall provide a water feasibility study using parameters approved by the Public Works Director to determine if there is an adequate supply of water for the proposed use and to estimate the impact of the use on existing wells, groundwater, and surface waters in the vicinity.

(c) The Utilities Director may request additional data or documentation that may be used to make a recommendation to the City Council.

(2) The City Council may require the data center to comply with additional requirements including, but not limited to, requirements for data centers in the city limits as set forth in § 163.20 **Data Centers**of the Unified Development Code.

Section 5: That the City Council of the City of Fayetteville, Arkansas hereby determines that if any provision of this Ordinance is found to be invalid by the decision of any court of competent jurisdiction, such invalidity shall not affect the remaining sections, phrases, and provisions of this Ordinance which remain valid and enforceable.

Section 6: ***Emergency Clause.*** That the City Council of the City of Fayetteville, Arkansas hereby determines that this ordinance should become effective without delay to address the potential harmful effects of noise disturbances emanating from data centers, as well as the water and power needs of such developments, which is necessary for the public peace as well as the health and safety of Fayetteville residents. Therefore, the City Council hereby declares an emergency exists such that this ordinance shall become effective immediately upon its passage and approval.

EXHIBIT A

163.20 Data Centers

(A) *Purpose and Applicability.* All data centers constructed within the City of Fayetteville shall be designed and built to incorporate sufficient external noise attenuation measures in order to minimize the impact of noise disturbance on residents. Data centers shall also be required to provide sufficient evidence that their operation will not negatively impact the customers and users of public utilities within a utility's service area or the users of ground or surface waters.

(B) *Definitions.* For the purpose of this section, the following definitions shall apply unless the context clearly indicates or requires a different meaning:

Ambient noise: The all-encompassing noise level associated with a given environment, being a composite of sounds from all sources, excusing the alleged offensive noise, at the locations and approximate time at which comparison with the alleged offensive noise is to be made.

Data center shall have the same meaning as set forth in §151.01 Definitions of the Unified Development Code.

Decibel (dB) shall have the same meaning as set forth in §96.01 Definitions of Chapter 96, Noise Control.

Mechanical equipment: The networked computer systems along with supporting equipment such as batteries, backup generators, and cooling systems housed on the data center's property.

Noise attenuation: The reduction of noise levels through the use of sound-absorbing material, architectural design techniques, and/or any other suitable means.

Noise disturbance shall have the same meaning as set forth in §96.01 Definitions of Chapter 96, Noise Control.

Person: An individual, association, partnership, or corporation, including any officer, employee, department, or agency.

Sound: An oscillation in pressure, particle displacement, particle velocity or other physical parameter, in a medium with internal forces that causes compression and rarefaction of that medium. The description of sound may include any characteristic of such sound, including duration, intensity and frequency.

Sound level: shall have the same meaning as set forth in §96.01 Definitions of Chapter 96, Noise Control.

Sound level meter: shall have the same meaning as set forth in §96.01 Definitions of Chapter 96, Noise Control.

(C) *Water and Electricity Consumption Requirements*. Before a conditional use permit may be issued for the construction or operation of a data center within the corporate limits of Fayetteville, a property owner and operator of a data center shall comply with the following requirements:

(1) A water consumption, wastewater discharge, energy management, and thermal management report shall be submitted showing the following:

(a) Cooling System. The proposed cooling system for the Data Center and whether the Data Center will be water-cooled or air-cooled. The report must verify that the operation of the data center will not generate additional heat beyond the property line.

(b) An energy management plan describing the data center's power use effectiveness, waste heat recovery measures, and on-site or off-site renewable electricity generation.

(c) Water usage.

(i) The estimated amount of total water in million gallons that will be used by the proposed project and associated land use for a calendar year, along with a monthly breakdown of projected water demand for each month within that year.

(ii) The estimated amount of water in million gallons per day that will be used by the proposed project during a typical 24-hour operational period under normal conditions, including anticipated usage patterns

(iii) The estimated amount of water in million gallons per day to be used by the proposed project in a 24-hour period on its highest water consumption day.
(iv) The estimated highest instantaneous flow rate in gallons per minute that will be used by the project along with the minimum, average, and maximum durations and frequencies of these flow conditions.
(v) Indicate high consumption operational flexibility and whether high water demands can be aligned with the City's low-demand periods.
(vi) The number of the proposed water meters and the size of each water meter for the proposed project.
(vii) Fire flow requirements and capacity to provide fire flow for the proposed data center, as reviewed and approved by both the Fire Marshal and the Utilities Department.

(d) Wastewater discharge.
(i) The estimated amount of total wastewater in million gallons that will be discharged by the proposed project and associated land use for a calendar year, along with a monthly breakdown of projected wastewater discharge for each month within that year.
(ii) The estimated amount of wastewater in million gallons per day that will be discharged by the proposed project during a typical 24-hour operational period under normal conditions, including anticipated usage patterns.
(iii) The estimated amount of wastewater in million gallons per day to be discharged by the proposed project in a 24-hour period on its highest water consumption day.
(iv) The estimated highest instantaneous flow rate in gallons per minute that will be discharged by the project along with the minimum, average, and maximum durations and frequencies of these flow conditions.
(v) Indicate high discharge operational flexibility. Identify if high wastewater discharges can be aligned with the City's low-demand periods.
(vi) Identify chemicals or compounds that will or may be used by the data center that could impact wastewater quality. The report should show the average amount of total dissolved solids on a daily basis and also show the amount of total dissolved solids during anticipated peak periods.

(e) Any other information required by the City to determine whether the proposed data center will adversely impact the public interest.

(2) Water supply.
(a) If the data center will be served by a public water supply, the applicant shall submit documentation from the public water utility certifying that the public authority has the capacity to supply the water needed. The applicant shall provide any additional documentation requested by the public water utility in order to determine whether sufficient current and future capacity exists.
(b) Additionally, the applicant shall submit documentation from Beaver Water District certifying that it has sufficient current and future capacity and the needs of the data center will not adversely impact its ability to deliver water to its customers.
(c) If the data center intends to rely upon a nonpublic groundwater source or is to rely on surface water withdrawal for any portion of its cooling system, the applicant shall provide a water feasibility study using parameters approved by the Public Works Director to determine if there is an adequate supply of water for the proposed use and to estimate the impact of the use on existing wells, groundwater, and surface waters in the vicinity.

(3) Power supply.
(a) If the data center will be served by a public electric utility, the applicant shall submit documentation from that utility certifying that the utility will supply the power needed and that other customers/users within the utility's service area will not be negatively impacted. This documentation shall identify any required transmission, generation, or substation upgrades.
(b) If the data center intends to rely fully upon power sources other than from a public electric utility, the applicant shall provide a feasibility study establishing that the non-public power source is adequate to supply all of the data center's power needs.

(c) If the data center intends to partially rely upon electric power supplied by a public electric utility as well as alternative power sources, the applicant shall provide: 1) documentation from the utility certifying that the utility will supply the power needed; and 2) a feasibility study showing that the applicant's reliance upon the public electric utility will not negatively impact other customers and users of the utility.

(d) Data centers with backup generators shall comply with the following:

(i) All diesel backup generators shall meet U.S. Environmental Protection Agency (EPA) Tier 4 emission standards. Generators rated below the Tier 4 threshold shall meet the highest applicable EPA Tier.

(ii) Routine, non-emergency generator testing shall be limited to Monday through Friday, 10:00 a.m. to 4:00 p.m., excluding federal and state holidays.

(iii) The operator shall provide written notice of any scheduled generator testing to all property owners within 1,000 feet not less than 24 hours in advance and shall maintain a public web page listing scheduled testing windows.

(iv) Annual generator testing data and emissions reports shall be submitted to the Development Services Department.

(v) All on-site fuel storage shall comply with applicable National Fire Protection Association codes, and applicable state and local requirements; a fuel-handling plan and spill response plan shall be filed with the Fayetteville Fire Department.

(4) Cooling systems shall comply with the following requirements:

(a) All cooling systems shall be either fully air-cooled or high efficiency liquid cooled systems, or equivalent technologies designed to minimize water consumption and wastewater discharge. Open-loop and once-through cooling systems are prohibited. Evaporative-only cooling systems that consume potable water as the primary cooling medium are prohibited.

(b) On-site groundwater wells used as the primary cooling water source are prohibited. Wells used solely for landscape irrigation, fire suppression, or as makeup water for closed-loop systems remain permissible subject to applicable state and federal permitting.

(c) All cooling water discharged to the sanitary sewer shall comply with the City of Fayetteville's utility regulations. Chemically treated cooling water shall not be discharged to surface waters or stormwater systems.

(D) *Noise Attenuation Requirements.* Before a data center has commenced construction or operating within this jurisdiction, the property owner and operator proposing to build a data center shall comply with the following:

(1) Notice Requirements. The property owner and operator must notify all residents within a half-mile radius of the parcel, including any affiliated homeowners' association operating within the half-mile radius. that the property owner and operator intends to build and operate a data center on the property. The notice required in this section must be mailed to all property owners, residents, and homeowners' association addresses contained within a half-mile radius extending from the boundary of the site where the proposed data center will be built. Proof of notification shall be filed with the Planning Division within thirty (30) days of providing notice. The property owner and operator must notify the Mayor that the property owner and operator intend to build and operate a data center. The notice must include the location for the proposed data center. This public notification shall occur at the same time as any other notification required by Chapter 157. If no public hearing is required, then this notification shall occur no less than thirty (30) days prior to the submission of the applicant's development or business license application. whichever occurs first.

(2) Noise Study Requirements. The property owner of the lands upon which the data center is to be located shall conduct a sound study performed by a third-party acoustic engineer to document baseline sound levels in the area of the proposed data center, including noise levels measured at the boundary of the site in eight (8) locations (north, south, east, west, northeast, northwest, southeast, southwest.) The report of the study must include sound mitigation recommendations based on the

results of the sound study. The property owner must provide a copy of the report of the study to the Planning Division within thirty (30) days of completion of the report.

(3) Noise Attenuation Plan Requirements.

(a) The property owner must consult with a third-party architectural or design firm to develop a building plan that includes necessary noise attenuation measures in order to prevent the external sound level emanating from the data center from exceeding the sound level limitations contained in in Chapter 96, Noise Control, which would be considered a noise disturbance. The building plan is not required to adopt any or all of the noise attenuation recommendations so long as the plan includes noise attenuation measures that the city deems adequate to be in compliance with this section. Noise attenuation measures may include but not limited to:

(i) Soundproofing walls, screens, panels, fences, or enclosures.

(ii) Buffer yards.

(iii) Other noise attenuation measures recommended by the third-party acoustic engineer or the city.

(b) Mechanical equipment must be shown on any proposed plan and must be fully screened on all sides. Mechanical equipment not screened by a facade of the building must be screened by a visually solid fence, screen wall or panel, or parapet wall and constructed with a design, materials, details, and treatment compatible with those used on the nearest facade of the building.

(c) The property owner must provide a copy of the building plan to the city within thirty (30) days of completion of the plan prior to construction.

(d) Any additions, changes, or expansions of the data center must comply with the noise attenuation requirements of this section and must be designed and submitted to the city within thirty (30) days of completion of the report.

(4) Post Completion Noise Study Requirements.

(a) Upon the data center's completion, the data center operator must conduct a post-construction noise study performed by a third-party acoustic engineer to document noise levels emanating from the data center when mechanical equipment is running at full capacity, including all HVAC units and generators necessary for peak operation. Noise levels are to be measured at the boundary of the site in the original eight (8) locations used during the baseline study. The data center operator must provide a copy of the report to the city within ten (10) days of completion of the study.

(b) The data center shall not begin operations until the completion of the post-construction noise study and submission to the city as required above. In order for the data center to be in compliance, the noise study results must show that its operation is in compliance with this section and will not adversely impact residential neighbors. If the results show that the data center is not in compliance with this section or will adversely impact residential neighbors, the data center will be unable to commence operation until the required noise attenuation measures and noise limitations are met.(c) Furthermore, the data center operator must conduct annual noise studies under the baseline and post-construction studies specifications in accordance with subsections (a) and (b) above. The data center operator must provide the results to the city within ten (10) days after the anniversary date of the first sound study report.

(5) Procedure for Measurement. All tests shall be conducted according to the procedures set forth in Chapter 96, Noise Control.

(6) Noise Limitations. It shall be unlawful for any data center to make, or continue to cause or permit to be made or continued, noise levels constituting a noise disturbance. For the purposes of this section, the

external noise level emanating from data centers shall be deemed disturbing to a person, reasonably calculated to disturb the peace and unreasonably offensive and injurious to the public, or their property. if the sound level does not comply with the limits set forth in Chapter 96, Noise Control.

(E) *Setback Requirements*. Data centers shall be subject to setback requirements as follows
   (1) When adjoining an I-1 or I-2 zoning district, the building shall be located at least 100 feet from the boundary line.
   (2) When adjoining any other zoning district, the building shall be located at least 1,000 feet from any boundary line.

(F) *Landscape Buffers*. A landscape buffer approved by the Urban Forester of not less than 50 feet in width shall be installed along any frontage abutting an I-1 or I-2 zoning district. A buffer approved by the Urban Forester of not less than 100 feet in width shall be installed along any frontage abutting any other zoning district.

(G) *Monitoring and reporting requirements. T*he data center must identify a single point of contact for the community and maintain a public web page that includes noise verification reports. A data center's annual reporting requirements include compilation of all complaints received and the data center operator's response to those complaints.

(H) *Violations and Penalties.* Violations of the noise limitations shall be subject to the enforcement and penalty provisions of Chapter 96, Noise Control, as well as any remedies available to the city pursuant to the Unified Development Code, state or federal law. Violations of other provisions of this section shall be subject to the enforcement and penalty provisions of the Unified Development Code.

   (1) Any or all of the following persons may be held responsible for noise violations:
      (a) The person operating the equipment or creating the noise;
      (b) The person who employs the person operating the equipment or creating the noise at the time of the violation;
      (c) The person who owns or rents the property where the violation occurs.
   (2) The following acts, and the causing thereof, are declared to be in violation of this section:
      (a) The sound level emanating from the data center exceeds that allowed by Chapter 96, Noise Control.
      (b) The noise attenuation measures provided in the design plan to the city are not incorporated in the construction of the data center.
      (c) Any of the required sound study results are not filed with the city within thirty (30) days of completion of the report.
      (d) The building plan is not filed with the city within thirty (30) days of completion of the plan prior to construction.
      (e) Failure to act in accordance with any other provision of this section.
   (3) All data centers shall be in compliance with the requirements of this section before the city will issue a certificate of occupancy; failure to do so will be deemed a violation of this section and may result in an injunction, a stay in commencing operation, denial of allowed occupancy, or denial or withdrawal of city utilities or services.

EXHIBIT A

163.20 Data Centers

(A) *Purpose and Applicability.* All data centers constructed within the City of Fayetteville shall be designed and built to incorporate sufficient external noise attenuation measures in order to minimize the impact of noise disturbance on residents. Data centers shall also be required to provide sufficient evidence that their operation will not negatively impact the customers and users of public utilities within a utility's service area or the users of ground or surface waters.

(B) *Definitions.* For the purpose of this section, the following definitions shall apply unless the context clearly indicates or requires a different meaning:

Ambient noise: The all-encompassing noise level associated with a given environment, being a composite of sounds from all sources, excusing the alleged offensive noise, at the locations and approximate time at which comparison with the alleged offensive noise is to be made.

Data center shall have the same meaning as set forth in §151.01 Definitions of the Unified Development Code.

Decibel (dB) shall have the same meaning as set forth in §96.01 Definitions of Chapter 96, Noise Control.

Mechanical equipment: The networked computer systems along with supporting equipment such as batteries, backup generators, and cooling systems housed on the data center's property.

Noise attenuation: The reduction of noise levels through the use of sound-absorbing material, architectural design techniques, and/or any other suitable means.

Noise disturbance shall have the same meaning as set forth in §96.01 Definitions of Chapter 96, Noise Control.

Person: An individual, association, partnership, or corporation, including any officer, employee, department, or agency.

Sound: An oscillation in pressure, particle displacement, particle velocity or other physical parameter, in a medium with internal forces that causes compression and rarefaction of that medium. The description of sound may include any characteristic of such sound, including duration, intensity and frequency.

Sound level: shall have the same meaning as set forth in §96.01 Definitions of Chapter 96, Noise Control.

Sound level meter: shall have the same meaning as set forth in §96.01 Definitions of Chapter 96, Noise Control.

(C) *Water and Electricity Consumption Requirements*. Before a conditional use permit may be issued for the construction or operation of a data center within the corporate limits of Fayetteville, a property owner and operator of a data center shall comply with the following requirements:

(1) A water consumption, wastewater discharge, energy management, and thermal management report shall be submitted showing the following:

(a) Cooling System. The proposed cooling system for the Data Center and whether the Data Center will be water-cooled or air-cooled. The report must verify that the operation of the data center will not generate additional heat beyond the property line.

(b) An energy management plan describing the data center's power use effectiveness, waste heat recovery measures, and on-site or off-site renewable electricity generation.

(c) Water usage.

(i) The estimated amount of total water in million gallons that will be used by the proposed project and associated land use for a calendar year, along with a monthly breakdown of projected water demand for each month within that year.

(ii) The estimated amount of water in million gallons per day that will be used by the proposed project during a typical 24-hour operational period under normal conditions, including anticipated usage patterns

(iii) The estimated amount of water in million gallons per day to be used by the proposed project in a 24-hour period on its highest water consumption day.

(iv) The estimated highest instantaneous flow rate in gallons per minute that will be used by the project along with the minimum, average, and maximum durations and frequencies of these flow conditions.

(v) Indicate high consumption operational flexibility and whether high water demands can be aligned with the City's low-demand periods.

(vi) The number of the proposed water meters and the size of each water meter for the proposed project.

(vii) Fire flow requirements and capacity to provide fire flow for the proposed data center, as reviewed and approved by both the Fire Marshal and the Utilities Department.

(d) Wastewater discharge.

(i) The estimated amount of total wastewater in million gallons that will be discharged by the proposed project and associated land use for a calendar year, along with a monthly breakdown of projected wastewater discharge for each month within that year.

(ii) The estimated amount of wastewater in million gallons per day that will be discharged by the proposed project during a typical 24-hour operational period under normal conditions, including anticipated usage patterns.

(iii) The estimated amount of wastewater in million gallons per day to be discharged by the proposed project in a 24-hour period on its highest water consumption day.

(iv) The estimated highest instantaneous flow rate in gallons per minute that will be discharged by the project along with the minimum, average, and maximum durations and frequencies of these flow conditions.

(v) Indicate high discharge operational flexibility. Identify if high wastewater discharges can be aligned with the City's low-demand periods.

(vi) Identify chemicals or compounds that will or may be used by the data center that could impact wastewater quality. The report should show the average amount of total dissolved solids on a daily basis and also show the amount of total dissolved solids during anticipated peak periods.

(e) Any other information required by the City to determine whether the proposed data center will adversely impact the public interest.

(2) Water supply.

(a) If the data center will be served by a public water supply, the applicant shall submit documentation from the public water utility certifying that the public authority has the capacity to supply the water needed. The applicant shall provide any additional documentation requested by the public water utility in order to determine whether sufficient current and future capacity exists.

(b) Additionally, the applicant shall submit documentation from Beaver Water District certifying that it has sufficient current and future capacity and the needs of the data center will not adversely impact its ability to deliver water to its customers.

(c) If the data center intends to rely upon a nonpublic groundwater source or is to rely on surface water withdrawal for any portion of its cooling system, the applicant shall provide a water feasibility study using parameters approved by the Public Works Director to determine if there is an adequate supply of water for the proposed use and to estimate the impact of the use on existing wells, groundwater, and surface waters in the vicinity.

(3) Power supply.

(a) If the data center will be served by a public electric utility, the applicant shall submit documentation from that utility certifying that the utility will supply the power needed and that other customers/users within the utility's service area will not be negatively impacted. This documentation shall identify any required transmission, generation, or substation upgrades.

(b) If the data center intends to rely fully upon power sources other than from a public electric utility, the applicant shall provide a feasibility study establishing that the non-public power source is adequate to supply all of the data center's power needs.

(c) If the data center intends to partially rely upon electric power supplied by a public electric utility as well as alternative power sources, the applicant shall provide: 1) documentation from the utility certifying that the utility will supply the power needed; and 2) a feasibility study showing that the applicant's reliance upon the public electric utility will not negatively impact other customers and users of the utility.

(d) Data centers with backup generators shall comply with the following:

(i) All diesel backup generators shall meet U.S. Environmental Protection Agency (EPA) Tier 4 emission standards. Generators rated below the Tier 4 threshold shall meet the highest applicable EPA Tier.

(ii) Routine, non-emergency generator testing shall be limited to Monday through Friday, 10:00 a.m. to 4:00 p.m., excluding federal and state holidays.

(iii) The operator shall provide written notice of any scheduled generator testing to all property owners within 1,000 feet not less than 24 hours in advance and shall maintain a public web page listing scheduled testing windows.

(iv) Annual generator testing data and emissions reports shall be submitted to the Development Services Department.

(v) All on-site fuel storage shall comply with applicable National Fire Protection Association codes, and applicable state and local requirements; a fuel-handling plan and spill response plan shall be filed with the Fayetteville Fire Department.

(4) Cooling systems shall comply with the following requirements:

(a) All cooling systems shall be either fully air-cooled or high efficiency liquid cooled systems, or equivalent technologies designed to minimize water consumption and wastewater discharge. Open-loop and once-through cooling systems are prohibited. Evaporative-only cooling systems that consume potable water as the primary cooling medium are prohibited.

(b) On-site groundwater wells used as the primary cooling water source are prohibited. Wells used solely for landscape irrigation, fire suppression, or as makeup water for closed-loop systems remain permissible subject to applicable state and federal permitting.

(c) All cooling water discharged to the sanitary sewer shall comply with the City of Fayetteville's utility regulations. Chemically treated cooling water shall not be discharged to surface waters or stormwater systems.

(D) *Noise Attenuation Requirements.* Before a data center has commenced construction or operating within this jurisdiction, the property owner and operator proposing to build a data center shall comply with the following:

(1) Notice Requirements. The property owner and operator must notify all residents within a half-mile radius of the parcel, including any affiliated homeowners' association operating within the half-mile radius. that the property owner and operator intends to build and operate a data center on the property. The notice required in this section must be mailed to all property owners, residents, and homeowners' association addresses contained within a half-mile radius extending from the boundary of the site where the proposed data center will be built. Proof of notification shall be filed with the Planning Division within thirty (30) days of providing notice. The property owner and operator must notify the Mayor that the property owner and operator intend to build and operate a data center. The notice must include the location for the proposed data center. This public notification shall occur at the same time as any other notification required by Chapter 157. If no public hearing is required, then this notification shall occur no less than thirty (30) days prior to the submission of the applicant's development or business license application. whichever occurs first.

(2) Noise Study Requirements. The property owner of the lands upon which the data center is to be located shall conduct a sound study performed by a third-party acoustic engineer to document

baseline sound levels in the area of the proposed data center, including noise levels measured at the boundary of the site in eight (8) locations (north, south, east, west, northeast, northwest, southeast, southwest.) The report of the study must include sound mitigation recommendations based on the results of the sound study. The property owner must provide a copy of the report of the study to the Planning Division within thirty (30) days of completion of the report.

(3) Noise Attenuation Plan Requirements.

(a) The property owner must consult with a third-party architectural or design firm to develop a building plan that includes necessary noise attenuation measures in order to prevent the external sound level emanating from the data center from exceeding the sound level limitations contained in in Chapter 96, Noise Control, which would be considered a noise disturbance. The building plan is not required to adopt any or all of the noise attenuation recommendations so long as the plan includes noise attenuation measures that the city deems adequate to be in compliance with this section. Noise attenuation measures may include but not limited to:

(i) Soundproofing walls, screens, panels, fences, or enclosures.

(ii) Buffer yards.

(iii) Other noise attenuation measures recommended by the third-party acoustic engineer or the city.

(b) Mechanical equipment must be shown on any proposed plan and must be fully screened on all sides. Mechanical equipment not screened by a facade of the building must be screened by a visually solid fence, screen wall or panel, or parapet wall and constructed with a design, materials, details, and treatment compatible with those used on the nearest facade of the building.

(c) The property owner must provide a copy of the building plan to the city within thirty (30) days of completion of the plan prior to construction.

(d) Any additions, changes, or expansions of the data center must comply with the noise attenuation requirements of this section and must be designed and submitted to the city within thirty (30) days of completion of the report.

(4) Post Completion Noise Study Requirements.

(a) Upon the data center's completion, the data center operator must conduct a post-construction noise study performed by a third-party acoustic engineer to document noise levels emanating from the data center when mechanical equipment is running at full capacity, including all HVAC units and generators necessary for peak operation. Noise levels are to be measured at the boundary of the site in the original eight (8) locations used during the baseline study. The data center operator must provide a copy of the report to the city within ten (10) days of completion of the study.

(b) The data center shall not begin operations until the completion of the post-construction noise study and submission to the city as required above. In order for the data center to be in compliance, the noise study results must show that its operation is in compliance with this section and will not adversely impact residential neighbors. If the results show that the data center is not in compliance with this section or will adversely impact residential neighbors, the data center will be unable to commence operation until the required noise attenuation measures and noise limitations are met.

(c) Furthermore, the data center operator must conduct annual noise studies under the baseline and post-construction studies specifications in accordance with subsections (a) and (b) above. The data center operator must provide the results to the city within ten (10) days after the anniversary date of the first sound study report.

(5) Procedure for Measurement. All tests shall be conducted according to the procedures set forth in Chapter 96, Noise Control.

(6) Noise Limitations. It shall be unlawful for any data center to make, or continue to cause or permit to be made or continued, noise levels constituting a noise disturbance. For the purposes of this section, the external noise level emanating from data centers shall be deemed disturbing to a person, reasonably calculated to disturb the peace and unreasonably offensive and injurious to the public, or their property. if the sound level does not comply with the limits set forth in Chapter 96, Noise Control.

(E) *Setback Requirements*. Data centers shall be subject to setback requirements as follows

(1) When adjoining an I-1 or I-2 zoning district, the building shall be located at least 100 feet from the boundary line.

(2) When adjoining any other zoning district, the building shall be located at least 1,000 feet from any boundary line.

(F) *Landscape Buffers*. A landscape buffer approved by the Urban Forester of not less than 50 feet in width shall be installed along any frontage abutting an I-1 or I-2 zoning district. A buffer approved by the Urban Forester of not less than 100 feet in width shall be installed along any frontage abutting any other zoning district.

(G) *Monitoring and reporting requirements. T*he data center must identify a single point of contact for the community and maintain a public web page that includes noise verification reports. A data center's annual reporting requirements include compilation of all complaints received and the data center operator's response to those complaints.

(H) *Violations and Penalties.* Violations of the noise limitations shall be subject to the enforcement and penalty provisions of Chapter 96, Noise Control, as well as any remedies available to the city pursuant to the Unified Development Code, state or federal law. Violations of other provisions of this section shall be subject to the enforcement and penalty provisions of the Unified Development Code.

(1) Any or all of the following persons may be held responsible for noise violations:
   (a) The person operating the equipment or creating the noise;
   (b) The person who employs the person operating the equipment or creating the noise at the time of the violation;
   (c) The person who owns or rents the property where the violation occurs.

(2) The following acts, and the causing thereof, are declared to be in violation of this section:
   (a) The sound level emanating from the data center exceeds that allowed by Chapter 96, Noise Control.
   (b) The noise attenuation measures provided in the design plan to the city are not incorporated in the construction of the data center.
   (c) Any of the required sound study results are not filed with the city within thirty (30) days of completion of the report.
   (d) The building plan is not filed with the city within thirty (30) days of completion of the plan prior to construction.
   (e) Failure to act in accordance with any other provision of this section.

(3) All data centers shall be in compliance with the requirements of this section before the city will issue a certificate of occupancy; failure to do so will be deemed a violation of this section and may result in an injunction, a stay in commencing operation, denial of allowed occupancy, or denial or withdrawal of city utilities or services.

CivicClerk No.: 2026-2001

AGENDA REQUEST FORM

FOR: Council Meeting of June 16, 2026

FROM: **Scott Berna**
Mike Wiederkehr

ORDINANCE OR RESOLUTION TITLE AND SUBJECT:

AN ORDINANCE TO MAKE DATA CENTERS A CONDITIONAL USE IN THE CITY OF FAYETTEVILLE AND PROVIDE FOR ADDITIONAL REGULATIONS ON DATA CENTERS BY AMENDING § 161.31 **DISTRICT I-2, GENERAL INDUSTRIAL**, § 164.27 **DATA CENTERS**, § 51.001 **WATER SHORTAGES,** AND § 51.112 **WATER SERVICE AND EXTENSION POLICY** OF THE UNIFIED DEVELOPMENT CODE, AND TO DECLARE AN EMERGENCY

APPROVED FOR AGENDA:

Approved by email — 6/2/26
Council Member Scott Berna — Date

Approved by email — 6/3/26
Council Member Mike Wiederkehr — Date

6/3/2026
Blake Pennington — Date
Approved as to form

Acknowledged by Phone — 6/3/26
Mayor Molly Rawn — Date
Acknowledgement

From: Wiederkehr, Mike
To: Barnes, Stacy; Berna, Scott
Subject: Re: Ordinance to make data centers a conditional use
Date: Wednesday, June 3, 2026 10:21:09 AM
Attachments: image001.png

Hi Stacy,
I absolutely do wish to co-sponsor this ordinance!
Thank you,
Mike

Get Outlook for iOS

From: Barnes, Stacy <sbarnes@fayetteville-ar.gov>
Sent: Wednesday, June 3, 2026 9:52:35 AM
To: Berna, Scott <scott.berna@fayetteville-ar.gov>; Wiederkehr, Mike <mike.wiederkehr@fayetteville-ar.gov>
Subject: Ordinance to make data centers a conditional use

Good Morning gentleman!

Attached is an Agenda Request form, Ordinance, Exhibit A, and the red line version. If you approve this, please let me know and I will get it all finished up! If Council Member Wiederkehr does not wish to co-sponsor, let me know, there is already a request form prepared for just Council Member Berna if that is the case. Thanks so much!

Stacy Barnes
City Attorney Paralegal
City of Fayetteville, Arkansas
113 W Mountain St., Suite 302
Fayetteville, AR 72701
T 479.575.8313 |
Website | Facebook | Twitter | Instagram | YouTube