Mayor Lioneld Jordan

City Attorney Kit Williams

City Clerk Sondra Smith

Aldermen

Ward 1 Position 1 – Adella Gray
Ward 1 Position 2 – Brenda Thiel
Ward 2 Position 1 – Kyle B. Cook
Ward 2 Position 2 – Matthew Petty
Ward 3 Position 1 – Robert K. Rhoads
Ward 3 Position 2 – Robert Ferrell
Ward 4 Position 1 – Shirley Lucas
Ward 4 Position 2 – Sarah E. Lewis

Final Agenda
City of Fayetteville Arkansas
City Council Meeting
July 6, 2010

A meeting of the Fayetteville City Council will be held on July 6, 2010 at 6:00 PM in Room 219 of the City Administration Building located at 113 West Mountain Street, Fayetteville, Arkansas.

Call to Order

Roll Call

Pledge of Allegiance

Mayor's Announcements, Proclamations and Recognitions:

Presentations, Reports and Discussion Items:

Agenda Additions:

A. Consent:

1. Approval of the June 15, 2010 City Council meeting minutes. **APPROVED**

2. **Woolsey Aviation, Inc. D/B/A Million Air of Fayetteville:** A resolution authorizing and approving an airport use and lease agreement for fixed base operations with Woolsey Aviation, Inc. D/B/A Million Air of Fayetteville in the amount of $29,560.20.

   PASSED AND SHALL BE RECORDED AS RESOLUTION NO. 112-10

3. **Ball Plaza Holdings, LLC:** A resolution approving a lease with Ball Plaza Holdings, LLC to rent space in the E.J. Ball Building to house the City of Fayetteville Information Technology Division's server room for the annual amount of $18,504.00.

   PASSED AND SHALL BE RECORDED AS RESOLUTION NO. 113-10

4. **Sweetser Construction, Inc.:** A resolution awarding bid and approving a contract with Sweetser Construction, Inc. in the amount of $285,811.00 for the construction of repairs to the Lake Wilson spillway, and approving a 10% project contingency.

   PASSED AND SHALL BE RECORDED AS RESOLUTION NO. 114-10

5. **Garver, LLC Amendment No. 1:** A resolution approving contract Amendment No. 1 with Garver, LLC in the amount of $79,400.00 for construction phase services related to Lake Wilson Spillway Improvements.

   PASSED AND SHALL BE RECORDED AS RESOLUTION NO. 115-10

6. **Ground Zero Construction, Inc.:** A resolution awarding bid and approving a contract with Ground Zero Construction, Inc. in the amount of $64,750.00 for construction of Hamestring Creek Tributary restoration through the Red Oak Park Supplemental Drainage Improvements Project, and approving a 15% project contingency.

   PASSED AND SHALL BE RECORDED AS RESOLUTION NO. 116-10

7. **New Police Department Policies:** A resolution approving Fayetteville Police Department Policies 33.1 Training; 41.2.7 Department Response to Mentally Ill Subjects; and 44.2.4 School Resource Officers.

   PASSED AND SHALL BE RECORDED AS RESOLUTION NO. 117-10

B. Unfinished Business:

1. **RZN 10-3566 (932 Garland):** An ordinance rezoning that property described in rezoning petition RZN 10-3566, for approximately 0.84 acres, located at 932 Garland Avenue from R-PZD, Residential Planned Zoning District 06-2256 (932 Garland), to R-O, Residential Office and RMF-40, Residential Multi-family, 40 units per acre. *This ordinance was left on the Second Reading at the June 15, 2010 City Council meeting.*

   PASSED AND SHALL BE RECORDED AS ORDINANCE NO. 5331

2. **ADM 09-3273 (Business Registry and License Program):** An ordinance to amend the Fayetteville code by enacting a chapter to create a business registry and to require annual business licenses for all businesses and non-profits with locations within Fayetteville. *This ordinance was left on the Second Reading at the June 15, 2010 City Council meeting.*

   THIS ITEM WAS TABLED TO SEPTEMBER 7, 2010 CITY COUNCIL MEETING

3. **Amend Chapter 97 Parks and Recreation:** An ordinance to amend Chapter 97 Parks and Recreation of the Code of Fayetteville to permit and regulate signs recognizing donor contributions. *This ordinance was left on the Second Reading at the June 15, 2010 City Council meeting.*

   THIS ITEM WAS TABLED TO JULY 20, 2010 CITY COUNCIL MEETING

4. **Johnson Enhanced Water Service Contract:** A resolution to approve a 15 year contract for enhanced water service between Fayetteville and Johnson. *This resolution was tabled at the June 15, 2010 City Council meeting to the July 6, 2010 City Council meeting.*

   PASSED AND SHALL BE RECORDED AS RESOLUTION NO. 118-10

5. **Johnson Sanitary Sewer Service Contract:** A resolution to approve a 15 year contract for sanitary sewer service between Fayetteville and Johnson. *This resolution was tabled at the June 15, 2010 City Council meeting to the July 6, 2010 City Council meeting.*

   PASSED AND SHALL BE RECORDED AS RESOLUTION NO. 119-10

C. Public Hearing:

1. **Raze and Removal 890 S. Washington Ave.:** A resolution ordering the razing and removal of a dilapidated and unsafe structure owned by Ronald and Betty Ramirez located at 890 S. Washington Avenue in the City of Fayetteville, Arkansas and approving a budget adjustment of $4,149.00.

   PASSED AND SHALL BE RECORDED AS RESOLUTION NO. 120-10

D. New Business:

1. **Street Name Change:** A resolution renaming a section of N. Shiloh Drive to N. Farm Credit Drive due to street realignment.

   THIS ITEM WAS TABLED TO JULY 20, 2010 CITY COUNCIL MEETING

2. **City of Johnson Agreement:** A resolution to approve an agreement with the City of Johnson concerning payment of $35,000.00 to Johnson, Johnson conveying .77 acres to Fayetteville, the cities mutual assistance in obtaining right-of-way for the Van Asche extension, budget adjustment of $35,000.00 and other purposes.

   PASSED AND SHALL BE RECORDED AS RESOLUTION NO. 121-10

3. **Amend Chapter 33: Departments, Boards, Commissions, and Authorities:** An ordinance to amend Chapter 33 Department, Boards, Commissions and Authorities by enacting Title XXI, Fayetteville Arts Council into the Fayetteville Code.

   PASSED AND SHALL BE RECORDED AS ORDINANCE NO. 5332

4. **Amend Chapters 169: Physical Alteration of Land and Chapter 170: Stormwater Management, Drainage and Erosion Control:** An ordinance amending Chapter 169: Physical Alteration of Land and Chapter 170: Stormwater Management, Drainage and Erosion Control of Title XV of the Code of Fayetteville (Unified Development Code), to clarify stabilization requirements, require phased construction for sites larger than 20 acres, clarify re-vegetation requirements, clarify requirements for cut and fill slopes and retaining walls, define maintenance responsibility for stormwater management systems, restrict location of dirt and topsoil storage and define stabilization practices for dirt and topsoil storage, define a qualified inspector for erosion and sediment control best management practices, and require site plans for one and two family residences to contain a plan for erosion and sediment control and final on-site drainage.

   THIS ORDINANCE WAS LEFT ON THE FIRST READING

5. **Amend Chapter 171: Streets and Sidewalks:** An ordinance amending the Unified Development Code Chapter 171: Streets and Sidewalks to amend and clarify sidewalk and driveway approach construction standards.

   PASSED AND SHALL BE RECORDED AS ORDINANCE NO. 5333

6. **Amend Chapter 177: Landscape Regulations:** An ordinance amending Title XV: Unified Development Code of the City of Fayetteville, to amend Chapter 177: Landscape Regulations in order to modify existing requirements and regulations that address perimeter landscaping for development.

   THIS ORDINANCE WAS LEFT ON THE FIRST READING

7. **Ozark Transit Authority Interlocal Agreement:** An ordinance approving an amendment to the Interlocal Agreement providing for participation of the City of Fayetteville in the Ozark Transit Authority.

   PASSED AND SHALL BE RECORDED AS ORDINANCE NO. 5334

Announcements:

Adjournment: 8:15 p.m.

NOTICE TO MEMBERS OF THE AUDIENCE

All interested parties may appear and be heard before the City Council. If you wish to address the City Council on an agenda item please queue behind the podium when the Chair asks for public comment. Once the chair recognizes you, go to the podium and give your name and address. Address your comments to the Chair, who is the presiding officer. The Chair will direct your comments to the appropriate elected official, staff member or others for response. Please keep your comments brief, to the point and relevant to the agenda item being considered so that everyone has a chance to speak.

Interpreters or TDD for hearing impaired are available for all City Council meetings, a 72 hour advance notice is required. For further information or to request an interpreter, please call 575-8330.

As a courtesy please turn off all cell phones and pagers.

A copy of the City Council agenda is available at accessfayetteville.org or in the office of the City Clerk, 113 West Mountain, Fayetteville, Arkansas.

City Council Meeting: **July 6, 2010** **Adjourn:** 8:15 pm

Subject:	**Roll**				
Alderman Rhoads & Alderman Thiel were absent	**Petty**	✓			
	Rhoads	absent			
	Ferrell	✓			
	Lucas	✓			
	Lewis	✓			
	Gray	✓			
	Thiel	absent			
	Cook	✓			
	Mayor Jordan	✓			

7-0

Subject:					
Motion To:					
Motion By:					
Seconded:					
	Petty				
	Rhoads				
	Ferrell				
	Lucas				
	Lewis				
	Gray				
	Thiel				
	Cook				
	Mayor Jordan				

City Council Meeting: **July 6, 2010**

Subject:	**Consent**				
Motion To:		Approve			
Motion By:		Cook			
Seconded:		Gray			
Minutes approved	**Petty**	✓			
	Rhoads	Absent			
	Ferrell	✓			
	Lucas	✓			
	Lewis	✓			
	Gray	✓			
passed 112-10 thru 117-10	**Thiel**	absent			
	Cook	✓			
	Mayor Jordan				

6-0

Subject:					
Motion To:					
Motion By:					
Seconded:					
	Petty				
	Rhoads				
	Ferrell				
	Lucas				
	Lewis				
	Gray				
	Thiel				
	Cook				
	Mayor Jordan				

City Council Meeting: **July 6, 2010**

Subject:	**RZN 10-3566 (932 Garland)**				
Motion To:		3rd Read	Amend to Community Services	Pass	
Motion By:		Petty	Petty		
Seconded:		Ferrell	Cook		
B. 1 Unfinished Business	**Petty**	✓	✓	✓	
	Rhoads	absent	absent	absent	
	Ferrell	✓	✓	✓	
	Lucas	✓	✓	✓	
	Lewis	✓	✓	✓	
passed as amended	**Gray**	✓	✓	✓	
	Thiel	absent	absent	absent	
	Cook	✓	✓	✓	
5331	**Mayor Jordan**				
		6-0	6-0	6-0	

Subject:	**ADM 09-3273 (Business Registry and License Program)**				
Motion To:		3rd Read	Table to Sept. 7, 2010		
Motion By:		Gray	Lucas		
Seconded:		Petty	Ferrell		
B. 2 Unfinished Business	**Petty**	✓	✓		
	Rhoads	absent	absent		
	Ferrell	✓	✓		
	Lucas	✓	✓		
Tabled to Sept. 7, 2010	**Lewis**	✓	✓		
	Gray	✓	✓		
	Thiel	absent	absent		
Left on the Third	**Cook**	✓	✓		
Reading	**Mayor Jordan**				
		6-0	6-0		

City Council Meeting: **July 6, 2010**

Subject:	**Amend Chapter 97 Parks and Recreation**				
Motion To:		3rd Read	Table to July 20, 2010		
Motion By:		Gray	Cook		
Seconded:		Lucas	Lewis		
B. 3 Unfinished Business	**Petty**	✓	✓		
	Rhoads	absent	absent		
	Ferrell	✓	✓		
	Lucas	✓	✓		
Left on the Third Reading & Tabled to July 20, 2010	**Lewis**	✓	✓		
	Gray	✓	✓		
	Thiel	absent	absent		
	Cook	✓	✓		
	Mayor Jordan				
		6-0	6-0		

Subject:	**Johnson Enhanced Water Service Contract**				
Motion To:		Approve			
Motion By:		Ferrell			
Seconded:		Cook			
B. 4 Unfinished Business	**Petty**	✓			
	Rhoads	absent			
	Ferrell	✓			
	Lucas	✓			
Passed	**Lewis**	✓			
	Gray	✓			
118-10	**Thiel**	absent			
	Cook	✓			
	Mayor Jordan				
		6-0			

City Council Meeting: **July 6, 2010**

Subject:	**Johnson Sanitary Sewer Service Contract**				
Motion To:		Approve			
Motion By:		Cook			
Seconded:		Ferrell			
B. 5 Unfinished Business	**Petty**	✓			
	Rhoads	Absent			
	Ferrell	✓			
	Lucas	✓			
	Lewis	✓			
Passed	**Gray**	✓			
119-10	**Thiel**	Absent			
	Cook	✓			
	Mayor Jordan				

6-0

Subject:					
Motion To:					
Motion By:					
Seconded:					
	Petty				
	Rhoads				
	Ferrell				
	Lucas				
	Lewis				
	Gray				
	Thiel				
	Cook				
	Mayor Jordan				

City Council Meeting: **July 6, 2010**

Subject:	**Raze and Removal 890 S. Washington Ave.**				
Motion To:		Approve			
Motion By:		Petty			
Seconded:		Cook			
C. 1 Public Hearing	**Petty**	✓			
	Rhoads	Absent			
	Ferrell	✓			
	Lucas	✓			
	Lewis	✓			
passed	**Gray**	✓			
120-10	**Thiel**	Absent			
	Cook	✓			
	Mayor Jordan				

6-0

Subject:					
Motion To:					
Motion By:					
Seconded:					
	Petty				
	Rhoads				
	Ferrell				
	Lucas				
	Lewis				
	Gray				
	Thiel				
	Cook				
	Mayor Jordan				

City Council Meeting: **July 6, 2010**

Subject:	**Street Name Change**				
Motion To:		Table to July 20, 2010			
Motion By:		Lucas			
Seconded:		Lewis			
D. 1 New Business	**Petty**	✓			
	Rhoads	Absent			
	Ferrell	✓			
	Lucas	✓			
Tabled to: July 20, 2010	**Lewis**	✓			
	Gray	✓			
	Thiel	Absent			
	Cook	✓			
	Mayor Jordan				

6-0

Subject:	**City of Johnson Agreement**				
Motion To:		Approve			
Motion By:		Ferrell			
Seconded:		Cook			
D. 2 New Business	**Petty**	✓			
	Rhoads	Absent			
	Ferrell	✓			
	Lucas	✓			
Passed	**Lewis**	✓			
	Gray	✓			
121-10	**Thiel**	Absent			
	Cook	✓			
	Mayor Jordan				

6-0

City Council Meeting: **July 6, 2010**

Subject:	**Amend Chapter 33: Departments, Boards, Commissions, and Authorities**				
Motion To:		Amend: Remove Appeal Process	2nd Read	3rd Read	Pass
Motion By:		Ferrell	Lewis	Gray	
Seconded:		Gray	Lucas	Lucas	
D. 3 New Business	**Petty**	✓	✓	✓	✓
	Rhoads	absent	absent	absent	absent
	Ferrell	✓	✓	✓	✓
	Lucas	✓	✓	✓	✓
	Lewis	✓	✓	✓	✓
Passed	**Gray**	✓	✓	✓	✓
	Thiel	absent	absent	absent	absent
5332	**Cook**	✓	✓	✓	✓
	Mayor Jordan				
		6-0	6-0	6-0	6-0

Subject:	**Amend Chapters 169: Physical Alteration of Land and Chapter 170: Stormwater Management, Drainage and Erosion Control**				
Motion To:		2nd Read			
Motion By:		Lewis			
Seconded:		Gray			
D. 4 New Business	**Petty**	N			
	Rhoads	absent			
	Ferrell	✓			
	Lucas	✓			
Left on the First Reading	**Lewis**	✓			
	Gray	✓			
	Thiel	Absent			
	Cook	✓			
	Mayor Jordan				

5-1 Failed needed 6 Votes to suspend the rules.

City Council Meeting: **July 6, 2010**

Subject:	**Amend Chapter 171: Streets and Sidewalks**				
Motion To:		2nd Read	3rd Read	Pass	
Motion By:		Cook	Cook		
Seconded:		Ferrell	Gray		
D. 5 New Business	**Petty**	✓	✓	✓	
	Rhoads	Absent	Absent	absent	
	Ferrell	✓	✓	✓	
	Lucas	✓	✓	✓	
	Lewis	✓	✓	✓	
	Gray	✓	✓	✓	
Passed	**Thiel**	Absent	Absent	absent	
5333	**Cook**	✓	✓	✓	
	Mayor Jordan				
		6-0	6-0	6-0	

Subject:	**Amend Chapter 177: Landscape Regulations**				
Motion To:					
Motion By:					
Seconded:					
D. 6 New Business	**Petty**				
	Rhoads				
	Ferrell				
	Lucas				
Left on the First Reading	**Lewis**				
	Gray				
	Thiel				
	Cook				
	Mayor Jordan				

City Council Meeting: **July 6, 2010**

Subject:	**Ozark Transit Authority Interlocal Agreement**				
Motion To:		2nd Read	3rd Read	Pass	
Motion By:		Petty	Petty		
Seconded:		Cook	Gray		
D. 7	**Petty**	✓	✓	✓	
New	**Rhoads**	Absent	absent	absent	
Business	**Ferrell**	✓	✓	N	
	Lucas	✓	✓	✓	
	Lewis	✓	✓	✓	
Passed	**Gray**	✓	✓	✓	
	Thiel	absent	absent	absent	
5334	**Cook**	✓	✓	✓	
	Mayor Jordan				
		6-0	6-0	5-1	

Subject:					
Motion To:					
Motion By:					
Seconded:					
	Petty				
	Rhoads				
	Ferrell				
	Lucas				
	Lewis				
	Gray				
	Thiel				
	Cook				
	Mayor Jordan				

FAYETTEVILLE
THE CITY OF FAYETTEVILLE, ARKANSAS

KIT WILLIAMS, CITY ATTORNEY
DAVID WHITAKER, ASST. CITY ATTORNEY

DEPARTMENTAL CORRESPONDENCE

LEGAL DEPARTMENT

TO: **Lioneld Jordan**, Mayor

THRU: **Sondra Smith**, City Clerk

FROM: **Jason Kelley**, Assistant City Attorney

DATE: **July 7, 2009**

RE: **Resolutions and Ordinances prepared by the City Attorney's Office and passed at the City Council meeting of July 6, 2010**

1. **Woolsey Aviation, Inc. d/b/a Million Air of Fayetteville:** A resolution authorizing and approving an airport use and lease agreement for fixed base operations with Woolsey Aviation, Inc., d/b/a Million Air of Fayetteville in the amount of $29,560.00.

2. **Ball Plaza Holdings, LLC:** A resolution approving a lease with Ball Plaza Holdings, LLC to rent space in the E.J. Ball Building to house the City of Fayetteville Information Technology Division's server room for the annual amount of $18,504.00.

3. **Sweetser Construction, Inc.:** A resolution awarding Bid and approving a contract with Sweetser Construction, Inc. in the amount of $285,811.00 for the construction of repairs to the Lake Wilson Spillway and approving a 10% project contingency.

4. **Garver, LLC Amendment No. 1:** A resolution approving Contract Amendment No. 1 with Garver, LLC in the amount of $79,400.00 for construction phase services related to Lake Wilson Spillway improvements.

5. **Ground Zero Construction, Inc.:** A resolution awarding Bid and approving a contract with Ground Zero Construction, Inc. in the amount of $64,750.00 for construction of Hamestring Creek Tributary Restoration through the Red Oak Park Supplemental Drainage Improvements Project, and approving a 15% project contingency.

6. **New Police Department Policies:** A resolution approving Fayetteville Police Department Policies 33.1 Training; 41.25 Department Response to Mentally Ill Subjects; and 44.2.4 School Resource Officers.

7. **Johnson Enhanced Water Service Contract:** A resolution to approve a 15 year contract for Enhanced Water Service between Fayetteville and Johnson.

8. **Johnson Sanitary Sewer Service Contract:** A resolution to approve a 15 year contract for Sanitary Sewer Service between Fayetteville and Johnson.

9. **Raze & Removal of 890 S. Washington Avenue:** A resolution ordering the razing and removal of a dilapidated and unsafe structure owned by Ronald and Betty Ramirez located at 890 S. Washington Avenue in the City of Fayetteville and approving a budget adjustment of $4,149.00.

10. **City of Johnson Agreement:** A resolution to approve an agreement with the City of Johnson concerning payment of $35,000.00 to Johnson, Johnson conveying .77 acres to Fayetteville, the cities' mutual assistance in obtaining right-of-way for the Van Asche Extension, budget adjustment of $35,000.00 and other purposes.

11. **ORT Interlocal Agreement:** An ordinance approving an amendment to the Interlocal Agreement providing for participation of the City of Fayetteville in the Ozark Transit Authority.

Mayor Lioneld Jordan

City Attorney Kit Williams

City Clerk Sondra Smith

Aldermen

Ward 1 Position 1 – Adella Gray
Ward 1 Position 2 – Brenda Thiel
Ward 2 Position 1 – Kyle B. Cook
Ward 2 Position 2 – Matthew Petty
Ward 3 Position 1 – Robert K. Rhoads
Ward 3 Position 2 – Robert Ferrell
Ward 4 Position 1 – Shirley Lucas
Ward 4 Position 2 – Sarah E. Lewis

Final Agenda
City of Fayetteville Arkansas
City Council Meeting
July 6, 2010

A meeting of the Fayetteville City Council will be held on July 6, 2010 at 6:00 PM in Room 219 of the City Administration Building located at 113 West Mountain Street, Fayetteville, Arkansas.

Call to Order

Roll Call

Pledge of Allegiance

Mayor's Announcements, Proclamations and Recognitions:

Presentations, Reports and Discussion Items:

Agenda Additions:

A. Consent:

1. Approval of the June 15, 2010 City Council meeting minutes.

2. **Woolsey Aviation, Inc. D/B/A Million Air of Fayetteville:** A resolution authorizing and approving an airport use and lease agreement for fixed base operations with Woolsey Aviation, Inc. D/B/A Million Air of Fayetteville in the amount of $29,560.20.

3. **Ball Plaza Holdings, LLC:** A resolution approving a lease with Ball Plaza Holdings, LLC to rent space in the E.J. Ball Building to house the City of Fayetteville Information Technology Division's server room for the annual amount of $18,504.00.

4. **Sweetser Construction, Inc.:** A resolution awarding bid and approving a contract with Sweetser Construction, Inc. in the amount of $285,811.00 for the construction of repairs to the Lake Wilson spillway, and approving a 10% project contingency.

5. **Garver, LLC Amendment No. 1:** A resolution approving contract Amendment No. 1 with Garver, LLC in the amount of $79,400.00 for construction phase services related to Lake Wilson Spillway Improvements.

6. **Ground Zero Construction, Inc.:** A resolution awarding bid and approving a contract with Ground Zero Construction, Inc. in the amount of $64,750.00 for construction of Hamestring Creek Tributary restoration through the Red Oak Park Supplemental Drainage Improvements Project, and approving a 15% project contingency.

7. **New Police Department Policies:** A resolution approving Fayetteville Police Department Policies 33.1 Training; 41.2.7 Department Response to Mentally Ill Subjects; and 44.2.4 School Resource Officers.

B. Unfinished Business:

1. **RZN 10-3566 (932 Garland):** An ordinance rezoning that property described in rezoning petition RZN 10-3566, for approximately 0.84 acres, located at 932 Garland Avenue from R-PZD, Residential Planned Zoning District 06-2256 (932 Garland), to R-O, Residential Office and RMF-40, Residential Multi-family, 40 units per acre. *This ordinance was left on the Second Reading at the June 15, 2010 City Council meeting.*

   Left on the Second Reading.

2. **ADM 09-3273 (Business Registry and License Program):** An ordinance to amend the Fayetteville code by enacting a chapter to create a business registry and to require annual business licenses for all businesses and non-profits with locations within Fayetteville. *This ordinance was left on the Second Reading at the June 15, 2010 City Council meeting.*

   Left on the Second Reading.

3. **Amend Chapter 97 Parks and Recreation:** An ordinance to amend Chapter 97 Parks and Recreation of the Code of Fayetteville to permit and regulate signs recognizing donor contributions. *This ordinance was left on the Second Reading at the June 15, 2010 City Council meeting.*

   Left on the Second Reading.

4. **Johnson Enhanced Water Service Contract:** A resolution to approve a 15 year contract for enhanced water service between Fayetteville and Johnson. *This resolution was tabled at the June 15, 2010 City Council meeting to the July 6, 2010 City Council meeting.*

5. **Johnson Sanitary Sewer Service Contract:** A resolution to approve a 15 year contract for sanitary sewer service between Fayetteville and Johnson. *This resolution was tabled at the June 15, 2010 City Council meeting to the July 6, 2010 City Council meeting.*

C. Public Hearing:

1. **Raze and Removal 890 S. Washington Ave.:** A resolution ordering the razing and removal of a dilapidated and unsafe structure owned by Ronald and Betty Ramirez located at 890 S. Washington Avenue in the City of Fayetteville, Arkansas and approving a budget adjustment of $4,149.00.

D. New Business:

1. **Street Name Change:** A resolution renaming a section of N. Shiloh Drive to N. Farm Credit Drive due to street realignment.

2. **City of Johnson Agreement:** A resolution to approve an agreement with the City of Johnson concerning payment of $35,000.00 to Johnson, Johnson conveying .77 acres to Fayetteville, the cities mutual assistance in obtaining right-of-way for the Van Asche extension, budget adjustment of $35,000.00 and other purposes.

3. **Amend Chapter 33: Departments, Boards, Commissions, and Authorities:** An ordinance to amend Chapter 33 Department, Boards, Commissions and Authorities by enacting Title XXI, Fayetteville Arts Council into the Fayetteville Code.

4. **Amend Chapters 169: Physical Alteration of Land and Chapter 170: Stormwater Management, Drainage and Erosion Control:** An ordinance amending Chapter 169: Physical Alteration of Land and Chapter 170: Stormwater Management, Drainage and Erosion Control of Title XV of the Code of Fayetteville (Unified Development Code), to clarify stabilization requirements, require phased construction for sites larger than 20 acres, clarify re-vegetation requirements, clarify requirements for cut and fill slopes and retaining walls, define maintenance responsibility for stormwater management systems, restrict location of dirt and topsoil storage and define stabilization practices for dirt and topsoil storage, define a qualified inspector for erosion and sediment control best management practices, and require site plans for one and two family residences to contain a plan for erosion and sediment control and final on-site drainage.

5. **Amend Chapter 171: Streets and Sidewalks:** An ordinance amending the Unified Development Code Chapter 171: Streets and Sidewalks to amend and clarify sidewalk and driveway approach construction standards.

6. **Amend Chapter 177: Landscape Regulations:** An ordinance amending Title XV: Unified Development Code of the City of Fayetteville, to amend Chapter 177: Landscape Regulations in order to modify existing requirements and regulations that address perimeter landscaping for development.

7. **Ozark Transit Authority Interlocal Agreement:** An ordinance approving an amendment to the Interlocal Agreement providing for participation of the City of Fayetteville in the Ozark Transit Authority.

Announcements:

Adjournment:

NOTICE TO MEMBERS OF THE AUDIENCE

All interested parties may appear and be heard before the City Council. If you wish to address the City Council on an agenda item please queue behind the podium when the Chair asks for public comment. Once the chair recognizes you, go to the podium and give your name and address. Address your comments to the Chair, who is the presiding officer. The Chair will direct your comments to the appropriate elected official, staff member or others for response. Please keep your comments brief, to the point and relevant to the agenda item being considered so that everyone has a chance to speak.

Interpreters or TDD for hearing impaired are available for all City Council meetings, a 72 hour advance notice is required. For further information or to request an interpreter, please call 575-8330.

As a courtesy please turn off all cell phones and pagers.

A copy of the City Council agenda is available at accessfayetteville.org or in the office of the City Clerk, 113 West Mountain, Fayetteville, Arkansas.

RESOLUTION NO. _____

A RESOLUTION AWARDING BID AND APPROVING A CONTRACT WITH SWEETSER CONSTRUCTION, INC. IN THE AMOUNT OF $285,811.00 FOR THE CONSTRUCTION OF REPAIRS TO THE LAKE WILSON SPILLWAY, AND APPROVING A 10% PROJECT CONTINGENCY

BE IT RESOLVED BY THE CITY COUNCIL OF THE CITY OF FAYETTEVILLE, ARKANSAS:

Section 1. That the City Council of the City of Fayetteville, Arkansas hereby awards the bid and approves a contract with Sweetser Construction, Inc. in the amount of $285,811.00 for the construction of repairs to the Lake Wilson spillway. A copy of the contract is attached as Exhibit "A."

Section 2. That the City Council of the City of Fayetteville, Arkansas hereby approves a ten percent (10%) project contingency.

PASSED and **APPROVED** this 6th day of July, 2010.

APPROVED: ATTEST:

By: _____ By: _____

LIONELD JORDAN, Mayor **SONDRA E. SMITH**, City Clerk/Treasurer

RESOLUTION NO. _____

A RESOLUTION APPROVING FAYETTEVILLE POLICE DEPARTMENT POLICIES 33.1 TRAINING; 41.2.7 DEPARTMENT RESPONSE TO MENTALLY ILL SUBJECTS; AND 44.2.4 SCHOOL RESOURCE OFFICERS

BE IT RESOLVED BY THE CITY COUNCIL OF THE CITY OF FAYETTEVILLE, ARKANSAS:

Section 1. That the City Council of the City of Fayetteville, Arkansas hereby approves Fayetteville Police Department Policies 33.1 Training, 41.2.7 Department Response to Mentally Ill Subjects, and 44.2.4 School Resource Officers. A copy of the policies are attached hereto as Exhibit "A" and incorporated herein.

PASSED and **APPROVED** this 6th day of July, 2010.

APPROVED: ATTEST:

By: _____ By: _____
LIONELD JORDAN, Mayor **SONDRA E. SMITH**, City Clerk/Treasurer

B.2. ADM 09-3273
Business Registry & License Program.

Handed out at agenda session 6/29/10

B.2
ADM 09-3273 (Business Registry and License Program)
Page 1 of 2

Karen Minkel - business license conversation

From: Terra Tots <terratots@gmail.com>
To: <kminkel@ci.fayetteville.ar.us>
Date: 6/17/2010 3:54 PM
Subject: business license conversation
CC: Jerrmy Gawthorp <jerrmy@greenhousegrille.com>, Amy Robinson <amy@springlinegroup.com>, B Hembree <bhembree3@gmail.com>

Hi Karen.

I just wanted to follow up after our conversation at Terra Tots last week.

My concern with, yet another, required small business license is the utter confusion on the part of the business owner.
At this point, I feel like boycotting any other city, county, or state business "requirement" until a streamlined system is put in place for people opening/operating a business.
Perhaps a checklist highlighting all the registration requirements would be handy.
As a small business owner, I struggle with the current requirements since there is no easy way to know what we are supposed to register for. After three years in business, and almost a year of preparation prior to opening, I still discover random "requirements" that a small business owner is asked to complete. We worked with the Chamber when we opened in 2007, and worked very closely with the UofA Small Business Development Center, plus several months working with our SBA loan officer. Yet, there are still unknown licenses floating around that none of us knew about.
In much of the articles I've read about the idea of the business license, the idea of making it easy on the city is mentioned several times. The city should turn it's focus on how to make this complicated system easier for the business owner. The business owner should get something in return. After all, the business owners are what help to rake in income for the city. Help us, please don't bombard us with yet another piece of paperwork...and another fee.

I'm curious to know if the city has met with any business owners (small business owners) to get their input?

Respectfully,

--
Bernice Hembree
TERRA TOTS natural parenting
www.terra-tots.com

B.2. ADM 09-3273
Business Registry & License Program
Handed out at Agenda Session 6/29/10

Karen Minkel - Business Registry

From: "Stephen Davis" <sldavis@davisbusinessplanning.com>
To: "Bobby Ferrell" <ward3_pos2@ci.fayetteville.ar.us>
Date: 6/25/2010 1:25 PM
Subject: Business Registry

6/26/10

Alderman Ferrell

I want to express my support for the Business Registry Ordinance. My wife and I each own and operate a small business in Fayetteville and believe that the city of Fayetteville having a business registry will be of benefit to the community. The biggest benefit that we will derive from Fayetteville having a business registry requirement, in our opinion, is the periodic inspections that occur from the City's emergency personnel as they perform their routine checks.

I had intended to be present for the City Council meeting when the final vote was to be taken on this ordinance; however, my wife and I will be out of town on a trip.

Stephen L Davis
Davis Business Planning, LLC
479-935-4572
sldavis@davisbusinessplanning.com Davisbusinessplanning.com

D.1.
City of Johnson Agreement

WARRANTY DEED

BE IT KNOWN BY THESE PRESENTS:

THAT the **City of Johnson, Arkansas**, hereinafter called GRANTOR, for and in consideration of the sum of One Dollar ($1.00) and other good and valuable consideration, the receipt of which is hereby acknowledged, do hereby grant, bargain, sell and convey unto the **City of Fayetteville, Arkansas, a municipal corporation**, hereinafter called GRANTEE, and unto Grantee's successors and assigns, the following described land situated in the County of Washington, State of Arkansas, to-wit:

A tract of land being part of the W½ of the SW¼ of the NW¼ of Section 27 in Township 17 North, Range 30 West in the City of Johnson, Washington County, Arkansas, and being more particularly described as follows: Beginning at a found ½" rebar at the SW corner of the NW¼ of above said Section 27, Township 17 North, Range 30 West; thence along the West line of said Section 27 N 02° 30' 30" E a distance of 47.32 feet; thence leaving the West line of said Section 27 S 88° 16' 25" E a distance of 658.54 feet to the East line of the W½ of the SW¼ of the NW¼ of said Section 27 S 02° 29' 54" W a distance of 55.50 feet to the SE corner of the W½ of the SW¼ of the NW¼ of said Section 27; thence leaving the East line of the W½ of the SW¼ of the NW¼ of said Section 27, along the South line of the NW¼ of said Section 27 N 87° 33' 44" W a distance of 658.49 feet to the Point of Beginning and containing 33,851 square feet or 0.77 acres, more or less. The above described property being subject to any and all easements or rights-of-way of record or fact.

(The above description is as put forth in the Order of Possession and Consent Judgment of Civil Action No. CIV 09-2572-5.)

TO HAVE AND TO HOLD the said lands and appurtenances hereunto belonging unto the said Grantee and Grantee's successors and assigns, forever. And the said Grantors, hereby covenant that they are lawfully seized of said lands and premises; that the same is unencumbered, and that the Grantors will forever warrant and defend the title to the said lands against all legal claims whatever.

WITNESS the execution hereof on this _____ day of _____, 2010.

City of Johnson, Arkansas

BY: _____

_____
[Please print or type Name and Title]

ATTEST:

_____

_____
[Please print or type Name and Title]

[SEAL]

ACKNOWLEDGMENT

STATE OF ARKANSAS)
) ss.
COUNTY OF WASHINGTON)

BE IT REMEMBERED, that on this date, before the undersigned, a duly commissioned and acting Notary Public within and for said County and State, personally appeared _____ and _____, to me well known as the persons who executed the foregoing document, and who stated and acknowledged that they are the ___ _____ and _____, respectively, of the **City of Johnson, Arkansas**, and are duly authorized in their respective capacities to execute the foregoing instrument for and in the name and behalf of said municipality, and further stated and acknowledged that they had so signed, executed and delivered said instrument for the consideration, uses and purposes therein mentioned and set forth.

WITNESS my hand and seal on this _____ day of _____, 2010.

MY COMMISSION EXPIRES:

_____

_____
Notary Public

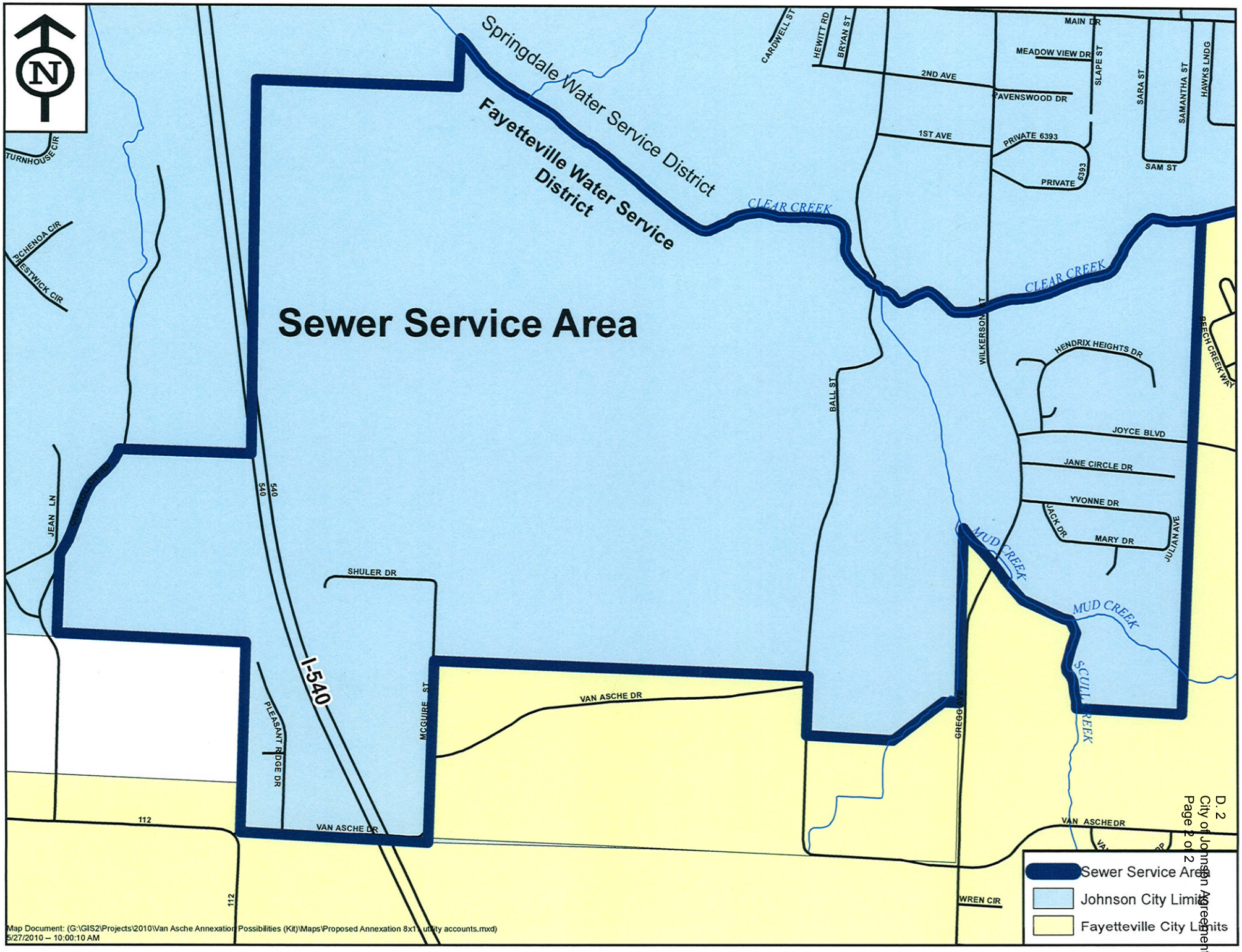

Map Document: (G:\GIS2\Projects\2010\Van Asche Annexation Possibilities (Kit)\Maps\Proposed Annexation 8x11 utility accounts.mxd)
5/27/2010 -- 10:00:10 AM

Mayor Lioneld Jordan

City Attorney Kit Williams

City Clerk Sondra Smith

Aldermen

Ward 1 Position 1 – Adella Gray
Ward 1 Position 2 – Brenda Thiel
Ward 2 Position 1 – Kyle B. Cook
Ward 2 Position 2 – Matthew Petty
Ward 3 Position 1 – Robert K. Rhoads
Ward 3 Position 2 – Robert Ferrell
Ward 4 Position 1 – Shirley Lucas
Ward 4 Position 2 – Sarah E. Lewis

City of Fayetteville Arkansas
City Council Meeting Minutes
June 15, 2010

A meeting of the Fayetteville City Council was held on June 15, 2010 at 6:00 p.m. in Room 219 of the City Administration Building located at 113 West Mountain Street, Fayetteville, Arkansas.

Mayor Jordan called the meeting to order.

PRESENT: Alderman Gray, Thiel, Cook, Petty, Rhoads, Ferrell, Lucas, Lewis, Mayor Jordan, City Attorney Kit Williams, City Clerk Sondra Smith, Staff, Press, and Audience.

Pledge of Allegiance

Mayor's Announcements, Proclamations and Recognitions:

The Mayor presented an award from the Southern Growth Policies Board to the City Council and the participants of Fayetteville Forward. The Southern Growth Policies Board honors southern initiatives that are improving economic opportunities and quality of life.

Alderman Lucas stated the Fayetteville Forward Economic Summit was great. She thanked the citizens of Fayetteville and volunteers for their participation in Fayetteville Forward.

Presentations, Reports and Discussion Items:

Nominating Committee Report – Alderman Cook

Alderman Cook presented the Nominating Committee Report. A copy of the report is attached.

Alderman Ferrell moved to approve the Nominating Committee Report. Alderman Lucas seconded the motion. Upon roll call the motion passed unanimously.

DRAFT

Agenda Additions: None

Consent:

Approval of the June 1, 2010 City Council meeting minutes.

Approved

Bid #10-36 Dynamic Lighting Solutions: A resolution awarding Bid #10-36 and approving the purchase of thirty-two (32) LED light fixtures and poles in the amount of $60,935.28 from Dynamic Lighting Solutions for installation as part of the Block Street Improvement Project.

Resolution 102-10 as recorded in the office of the City Clerk.

Bid #10-39 Chevrolet of Fayetteville: A resolution awarding Bid #10-39 and approving the purchase of one (1) 2011 Chevrolet Tahoe K-9 unit from Chevrolet of Fayetteville in the amount of $26,997.00 for use by the Fayetteville Police Department.

Resolution 103-10 as recorded in the office of the City Clerk.

Bid #10-40 Dynamic Lighting Solutions: A resolution awarding Bid #10-40 and approving the purchase of thirty-three (33) LED light fixtures and poles in the amount of $60,351.89 from Dynamic Lighting Solutions for installation on Scull Creek Trail between North Street and Maple Avenue.

Resolution 104-10 as recorded in the office of the City Clerk.

Vermeer Corporation: A resolution authorizing the purchase of one (1) 521 Wildcat Trommel Screener from Vermeer Corporation through an NJPA bid in the amount of $195,693.65 for use by the Solid Waste Division, and approving a budget adjustment.

Resolution 105-10 as recorded in the office of the City Clerk.

2009 Edward Byrne Memorial Justice Assistance Grant: A resolution authorizing acceptance of a 2009 Edward Byrne Memorial Justice Assistance Grant in the amount of $30,000.00 for drug enforcement equipment and supplies for the Fayetteville Police Department, and approving a budget adjustment recognizing the grant revenue.

Resolution 106-10 as recorded in the office of the City Clerk.

Garver, LLC Amendment No. 2: A resolution approving Amendment No. 2 to the contract with Garver, LLC in the amount of $196,350.00 for additional design and construction phase services for the Cato Springs Road Improvement Project.

Resolution 107-10 as recorded in the office of the City Clerk.

DRAFT

Fayetteville Expressway Economic Development Corridor Project: A resolution expressing the willingness of the City of Fayetteville to utilize federal-aid funds for expansion of Van Asche Drive from Garland Avenue to Gregg Avenue.

Resolution 108-10 as recorded in the office of the City Clerk.

Off Street Parking Development Appointment: A resolution to approve the appointment of four members of the Board of Improvement of the Downtown Off Street Parking Development District No. 1 of the City of Fayetteville.

Resolution 109-10 as recorded in the office of the City Clerk.

Alderman Cook moved to approve the Consent Agenda. Alderman Rhoads seconded the motion. Upon roll call the motion passed unanimously.

Unfinished Business:

Amend Chapter §163.14 Revocation or Change of Conditional Use: An ordinance amending §163.14 of the Unified Development Code to permit a periodic review of conditional use permits as described herein. *This ordinance was left on the First Reading at the May 18, 2010 City Council meeting. This ordinance was left on the Second Reading at the June 1, 2010 City Council meeting.*

Alderman Thiel moved to suspend the rules and go to the third reading. Alderman Gray seconded the motion. Upon roll call the motion passed unanimously.

City Attorney Kit Williams read the ordinance.

Mayor Jordan asked if staff had any additional information.

Andrew Garner stated he had no additional information.

Alderman Rhoads: I was of the recollection that the business owner wanted to wait for her lawyer to be here.

Mayor Jordan: I did too.

Don Marr, Chief of Staff stated this was a conditional use amendment which would allow a periodic review of conditional uses specifically targeted for conditional uses that have no conditions. He gave a brief description of the amendments.

City Attorney Kit Williams stated Subsection (E) (2) was rewritten.
Alderman Thiel stated an amendment made at the end of the meeting seemed to satisfy all the parties.

Alderman Lewis stated the amendment seems fairer for the entities it would address and it gives due process.

Alderman Ferrell: Kit, assuming this amendment passes is this going to make it easier to facilitate some kind of action other than staff making recommendations? Is there any step they can take other than court for revocation?

City Attorney Kit Williams: If a petition was gathered that included enough signatures by the neighborhood to justify a review, then the Planning Commission would hear from the neighbors, the holder of the permit, and the Planning staff. It would be the Planning Commission's decision on what would be the proper conditions to make sure the activity is compatible with the neighborhood. He continued to explain the process.

Alderman Ferrell: If that happens would the citizen have an appeal process to the Council?

City Attorney Kit Williams: Yes but it is difficult to appeal a conditional use. It requires three Aldermen to appeal a conditional use.

Alderman Lucas: A conditional use is given because a business or entity is not zoned for that. Is that right?

Andrew Garner stated in the zoning code, depending on the zoning district, there are permitted uses and conditional use. He gave a brief explanation of both.

Alderman Lucas: The fact that they are in a zone that is not zoned for that it is a conditional use.

Andrew Garner: That's correct. They are not automatically granted that use that is listed.

Alderman Petty stated this was a fair ordinance when it came forward the first time and only got better when it was amended to take out the revocation clause.

Kyle Unser, Representative for Sharon Stiles stated their concerns are still the same. He stated the Stiles have had a conditional use permit with no conditions for 30 years. For that period of time they have invested money, blood, sweat, tears and labor in reliance upon the conditional use permit. He urged Council not to pass the ordinance. He appreciates the consideration and thoughtfulness that went into the amendments.

Alderman Ferrell: The amended ordinance is a little bit more palatable than the one before isn't it?

Kyle Unser: Yes, it is.

Alderman Ferrell: The Planning Commission has been out there and looked at it and my understanding is they didn't find anything to change, did they?

DRAFT

Kyle Unser: No, sir not to my knowledge but that didn't stop us from being where we are today.

Alderman Petty: It does not matter what the petitioner's want it is up to the Planning Commission. The petitioner could ask for anything. I trust the Planning Commission to shut down frivolous petitions and to listen to compelling ones.

Bob Estes, Resident of Ward 4: I would not characterize myself as a representative of the opposition. I see this as a global issue. The last time this ordinance was amended the provision was included "if the Zoning and Development Administrator determines that the holder has violated the terms of the conditional use". Without a conditional use it becomes very problematic if not impossible to review a "conditional use." We have conditional uses within our City without conditions. I would characterize my remarks not as speaking on behalf of the opposition but as speaking on a housekeeping issue. That is to make our Unified Development ordinance workable and compatible with our goals that we have set.

Alderman Ferrell: What would you say drove this ordinance amendment?

Bob Estes: My concern is to have a mechanism or a device by which our Planning and Zoning Administrator can look at these conditional uses that contain no conditions. I'm an attorney and I represent an adjoiner. I am speaking to you as a Ward 4 citizen and as a representative of my clients. I served on the Planning Commission for a number of years and it was very difficult to deal with this, after the change in the ordinance, because we have this oxymoron called a conditional use without conditions.

Alderman Lewis: Whether it is one entity that trigged the discussion it is still a valid discussion. It brings up the fact that we have conditional uses that don't have conditions. It makes it really hard to review them to see if they fit the compatibility of the neighborhood.

Alderman Lucas: In the past I thought conditional uses of businesses were allowed to be in a certain zone because we approved a conditional use. After this does that mean from now on if we have something that goes into a neighborhood that is not zoned accordingly but has a conditional use, we're going to have to put some conditions on it in order for it to be legal?

City Attorney Kit Williams: The Unified Development Code now requires that conditions and terms be placed on conditional uses now. The problem is that twenty or thirty years ago when this concept was first being tested by Fayetteville, they didn't have as much experience with it so they granted conditional uses without making an expressed condition. Now we would never allow the Planning Commission to have a conditional use without conditions. I don't see this as a problem for any future conditional uses.

Alderman Lucas: It seems to me like this is going backwards.

Mayor Jordan asked shall the ordinance pass. Upon roll call the ordinance passed 6-2. Alderman Ferrell and Lucas voting no.

DRAFT

Ordinance 5330 as Recorded in the office of the City Clerk

New Business:

Home Depot Foundation/SCI Pilot Cities Grant: A resolution authorizing application and acceptance of a Home Depot Foundation/SCI Pilot Cities Grant in the amount of $500,000.00 with a city matching amount of $100,000.00 to complete an affordable housing project, develop a sustainability initiative, and perform an assessment of current sustainability efforts.

John Coleman, Sustainability Coordinator gave a brief description of the resolution.

Alderman Lewis: Projects that the City is already doing qualify as a match for the grant?

John Coleman: That is correct.

Alderman Thiel moved to approve the resolution. Alderman Lewis seconded the motion. Upon roll call the resolution passed unanimously.

Resolution 110-10 as recorded in the office of the City Clerk.

Highway 16 Improvements Project: A resolution amending resolution 101-06 expressing the willingness of the City of Fayetteville to participate in partial funding of the proposed widening of Highway 16.

Glenn Newman, City staff engineer gave a brief description of the resolution.

Alderman Thiel: I serve on the Street Committee and this has been disappointing as a representative for that Ward that we aren't going to be able to do more. The longer we wait and put off doing anything it's just going to continue to cost more.

Glenn Newman: One of the items in the resolution is if there are additional funds after the bid costs come in that the State continues to obligate the total monies to this project.

Alderman Ferrell: Thanked Alderman Thiel and members of the Street Committee for their support. From when it started to now has changed. This extenuates the fact that time is money. The longer you wait the more it costs.

Alderman Lewis asked if you only do a section does that knock us down to the bottom. What about the rest of it do we stay in line when there is more funding for that?

Glenn Newman: I am not prepared to answer that. I'm unsure of the procedure.

Alderman Lewis: I didn't know if we would have to ask for that again.

DRAFT

Alderman Lucas: Is there a timeline on this?

Glenn Newman: I can ask the Highway Department their timeline. The correspondence that we have had with the Highway Department originally they were prepared to give us right-of-way documents on the project at the end of last year. We are still waiting to get those. Since we have not received the Highway Department plans yet, I expect the timeline to shift at least six months.

Alderman Thiel: I regret that Highway 16 seems to be one of the slower projects going forward.

Alderman Gray: Six months from now is that what you are thinking?

Glenn Newman: Push it down the way six months is my understanding. I'm going off the timeline that they have presented to me and the City staff to look at utility relocations.

Don Marr, Chief of Staff: When the stimulus package came out a lot of funding on State projects pushed back projects that were outside of that program. There has been a delay because of the volume of work that has taken place at the State level. Your action to do it quickly is very beneficial to us because we have two projects, this one and Garland Avenue. This helps us move it forward.

Alderman Ferrell: If you look at the projects that the City contracted to do as opposed to the ones that we are going to do, that we have to go through the State on, the ones with the State are in the same boat.

Alderman Gray moved to approve the resolution. Alderman Thiel seconded the motion. Upon roll call the resolution passed unanimously.

Resolution 111-10 as recorded in the office of the City Clerk.

RZN 10-3566 (932 Garland): An ordinance rezoning that property described in rezoning petition RZN 10-3566, for approximately 0.84 acres, located at 932 Garland Avenue from R-PZD, Residential Planned Zoning District 06-2256 (932 Garland), to R-O, Residential Office and RMF-40, Residential Multi-family, 40 units per acre.

City Attorney Kit Williams read the ordinance.

Andrew Gardner gave a brief description of the ordinance.

Alderman Petty: Did staff discuss our new form based codes with the applicant?

Andrew Garner: We did and provided them with written documentation. We encouraged the applicant to use the form based zones but it wasn't what they were looking for.

Alderman Petty: Why did the applicant decide not to pursue a rezoning to the new form based codes?

Kelly Ellis: Speaking on behalf of the owner I believe it was a matter of looking at some of the detail regarding the types of structure and quality of materials. He felt it more flexible that he go back to the original zoning rather than the new code.

Alderman Petty: I see thank you.

Alderman Lewis: The Planning Commission in their discussion talked about this was a good entry way into the City. It makes me nervous to go back to RMF-40. I wished they had of considered the form based code.

Alderman Petty: RMF-40 makes me nervous. The reason we passed the form based zoning codes is because of the problems we recognized with our old zoning codes. He asked the Council not to pass this tonight to give himself an opportunity to discuss this with the property owner.

Alderman Ferrell moved to suspend the rules and go to the second reading. Alderman Lucas seconded the motion. Upon roll call the motion passed unanimously.

City Attorney Kit Williams read the ordinance.

This ordinance was left on the Second Reading.

ADM 09-3273 (Business Registry and License Program: An ordinance to amend the Fayetteville code by enacting a chapter to create a business registry and to require annual business licenses for all businesses and non-profits with locations within Fayetteville.

City Attorney Kit Williams read the ordinance.

Karen Minkel, Director of Strategic Planning gave a brief description of the ordinance. Strategic Planning staff began researching the feasibility of a business registry and license program at the request of Alderman Lucas and the Chamber of Commerce due to a lack of publicly assessable data about businesses located within the City boundary. Public safety was one of the primary reasons we are recommending a license. Central Dispatch, the Fire Marshal's office and the Arkansas Department of Health spend significant time attempting to track businesses that open, move, and rename. She stated this proposed program does not constitute a tax because it does not generate more money than it costs to operate.

Terry Lawson, Battalion Chief: We are in full support of the business license for the businesses that are coming into Fayetteville and the ones that exist here. He stated from time to time they run into problems with business that are opening and being able to do inspections.

DRAFT

Alderman Ferrell: If you have an emergency in the middle of the night how does the fire department access the information about what is in a particular business?

Terry Lawson: The information that we have Central Dispatch has been able to gather for us. We have a computer in our trucks that we are able to access information from so anything that dispatch has the guys on the trucks can access.

Alderman Ferrell: The information from the license will be loaded to dispatch so that you can access that if you are headed out.

Terry Lawson: Emergency contact information as well can be given to the guys.

Chief Tabor stated he supports the passage of this ordinance. This is a small step in helping us become more efficient. It will also help with officer safety.

Alderman Lucas: This is one of the things that came out of the Fayetteville Forward Summit.

Alderman Thiel: This sounds like the right thing to do. How does the staff plan to obtain this information?

Karen Minkel: We would spend a good six months reaching out to businesses in all manner of ways so that we can make sure everyone is informed of what they need to do. We would urge businesses to apply online.

Don Marr: It is our experience with the businesses in the City that most businesses start from a goal of complying with laws and regulations.

Alderman Thiel: Since we are not planning to budget for new staff where does this start at?

Karen Minkel: The program is going to be housed in the Development Services Department.

Don Marr: The rational for the Development Services area was simply because we currently have a Certificate of Zoning that businesses should have so that seemed the logical place.

Alderman Thiel: And at this time they are not real busy with issues.

Don Marr: That's correct.

Alderman Thiel: How about the Code Compliance folks? Are they not busy right now?

Don Marr: Code Compliance is extremely busy right now, as you probably know.
Alderman Thiel: Yes.

Don Marr: Whenever you have a recessionary environment it is harder for people to maintain properties and mow. It will have an impact. It is our effort, at the Mayor's direction, to really try to spread the work load with the areas where we have capacity.

Steve Clark, President of the Fayetteville Chamber of Commerce spoke in favor of the ordinance.

Alderman Lucas moved to suspend the rules and go to the second reading. Alderman Lewis seconded the motion. Upon roll call the motion passed 7-1. Alderman Petty voting no.

City Attorney Kit Williams read the ordinance.

This ordinance was left on the Second Reading.

Amend Chapter 97 Parks and Recreation: An ordinance to amend Chapter 97 Parks and Recreation of the Code of Fayetteville to permit and regulate signs recognizing donor contributions.

City Attorney Kit Williams read the ordinance.

Connie Edmonston, Director of Parks and Recreation gave a brief description of the ordinance. She stated this is to allow us to have private partnerships with businesses and individuals who would like to donate to Parks for our capital projects.

Alderman Lucas: If you put a sign in the park where exactly would you be putting it?

Connie Edmonston: It depends if we are naming the park after a donor of the park. It's mainly to recognize the donor and for people to see where that facility is. The amendment would allow only two signs per donor per amenity to be put up. Mainly you would see them at entrances or at that specific amenity.

Alderman Lucas: Is there a park somewhere that has a 4x4 sign? That's a pretty good size sign.

Connie Edmonston: It is and it says up to 4x4. It wouldn't mean that every facility would have that size.

Alderman Lucas: A 4x4 sign kind of bothers me. You have small signs on the back of the benches.

Connie Edmonston: We would want it to be in good taste and in order to get a 4x4 it would have to be a very substantial gift to the City. That would go through Parks staff, the Parks Board, and the Planning Commission.
City Attorney Kit Williams: If it is going to be naming a facility it would go to City Council.

Alderman Lucas: We appreciate the donations.

DRAFT

Connie Edmonston: This would give us options so that we are not tied down.

Alderman Lewis: The park is adopted by and then it says the name of the entity, is that the type of thing we are talking about? I like the idea that it is not their logo, it's just the name of the entity.

Connie Edmonston: It can be their logo.

City Attorney Kit Williams: It can include the name and logo but the logo is not in their colors. You could see their logo on a rock or engraved into the wood.

Don Marr stated if you have ever been to Little Rock at the River Market there is a section called the Medical Mile, which is an educational component geared towards the improvement of health and wellness. Those exhibits that were done through the City of Little Rock Parks system were donated by major health care and medical providers in Little Rock.

Connie Edmonston: It's customary when you go to any major cities parks that you see big signs.

City Attorney Kit Williams: We are not going to allow huge signs.

Alderman Thiel: I have the same concerns about anything that pertains to our sign ordinance but I also see this as being a great tool. If we see that the size of a sign and the naming is a problem we can discuss that.

Connie Edmonston: We want the signs in a park to be standardized.

Alderman Ferrell: When I was around the giving of corporate money there was always a strong reliance on the staff or organization as to what their recommendation was. If they are going to be associated with putting their name and money on something they want it to reflect the values of that area.

Alderman Lewis: I love the parks and I often go there. My core is telling me there is a problem with this because it is a slippery slope and not because of the sign ordinance but more because parks are public. If a private organization is going to give a donation it should be just that "a donation" and not an advertisement which is what this becomes.

Alderman Ferrell moved to suspend the rules and go to the second reading. Alderman Rhoads seconded the motion. Upon roll call the motion passed 7-1. Alderman Lewis voting no.

City Attorney Kit Williams read the ordinance.
Alderman Ferrell moved to suspend the rules and go to the third reading. Alderman Rhoads seconded the motion. Upon roll call the motion failed 4-4. Alderman Cook, Rhoads, Ferrell, and Gray voting yes. Alderman Petty, Lucas, Lewis, and Thiel voting no.

DRAFT

This motion failed.

This ordinance was left on the Second Reading.

Johnson Enhanced Water Service Contract: A resolution to approve a 15 year contract for enhanced water service between Fayetteville and Johnson.

City Attorney Kit Williams: This is part of our agreement that the City Council passed by resolution that we would enter into certain agreements with the City of Johnson related to the detachment of 99 acres from the City of Johnson and annexation of that into the City of Fayetteville. We created a contract that would enhance the water service that Johnson has. Mr. Jurgens has assured us that we can supply the water that is necessary with the current facilities we have. The contract was seen by the Water and Sewer Committee and approved unanimously. Since that time we have made some modifications and changes and I think those changes are better and improved this contract. I recommend that the resolution be tabled due to Mr. Jurgens being out of the country.

Alderman Cook: Everything we are adding in the water contract is very similar to if it was in the Fayetteville city limits. The biggest change in that is we will be charging the outside Fayetteville city limits rates.

Alderman Thiel moved to table the resolution to the July 6, 2010 City Council meeting. Alderman Petty seconded the motion. Upon roll call the motion passed unanimously.

This resolution was tabled to the July 6, 2010 City Council meeting.

Johnson Sanitary Sewer Service Contract: A resolution to approve a 15 year contract for sanitary sewer service between Fayetteville and Johnson.

City Attorney Kit Williams: We have being providing Johnson with potable water and now we are offering them sewer service. Mr. Jurgens thinks we can do this with no additional cost to our citizens. I recommend that the resolution be tabled due to Mr. Jurgens being out of the country.

Alderman Thiel moved to table the resolution to the July 6, 2010 City Council meeting. Alderman Petty seconded the motion. Upon roll call the motion passed unanimously.

This resolution was tabled to the July 6, 2010 City Council meeting.

Appeal of the Planning Commission's approval of ADM 10-3559 Weir Road Subdivision.

Jessie Fulcher gave a brief description of the appeal. Staff recommended approval of a one year extension and Planning Commission agreed and approved the one year extension. A citizen of

DRAFT

the City of Fayetteville petitioned a member of the Council to bring this Planning Commission decision to the City Council. You are being asked to uphold or reject the Planning Commission decision to grant the one year extension on the project.

Alderman Lewis: In the spirit of due process Holly Martin, a resident, requested the appeal. I need to hear from the staff, public, and the developer. I certainly haven't decided. I just want to give them a chance to be heard.

Alderman Thiel: If this is denied the builder can still build out there.

Jessie Fulcher: If the extension appeal is denied then no the project is expired.

Alderman Thiel: The project expires but the builder can still build out there.

Jessie Fulcher: The preliminary plat for Weir Road would be expired. They could go back to the County and start a new development process but they couldn't build this actual subdivision.

Alderman Thiel: But they could build houses there.

Jessie Fulcher: If this project expires with the City it also expires to the County.

Alderman Thiel: They couldn't build anything on their property out there?

Jessie Fulcher: They would be under County zoning regulations as of today which is one acre lots.

Alderman Thiel: One acre lots and this was much denser than that.

Jessie Fulcher: Yes. This was a 10,000 square foot lot minimum at that time. They would have to go through a new preliminary plat with a new lot.

Alderman Thiel: They would be using septic tanks if they did the one acre lots.

Jessie Fulcher: The original project was for a community system. If they went through a new process it would be up to the developer.

Alderman Thiel: The community system is a step system but it's still a septic system. They are not in the City so that can't be on our sewer. We have granted water extensions.

Mayor Jordan: We can do that sort of thing if we want to.

Alderman Thiel: We have done that but we haven't granted sewer.

City Attorney Kit Williams: We might have a time or two. I want to make sure that you all focus on the only issue that is up for decision tonight, not whether this is a good project or

DRAFT

anything else. The applicant has the burden to show good cause why the project could not reasonably be completed in the three years. There are no other issues that should be considered.

Alderman Rhoads: Is that what the applicant had to show to the Planning Commission?

City Attorney Kit Williams: Yes.

Alderman Rhoads: They have to show it again to us or do we have some other standard that we have to look at?

City Attorney Kit Williams: That is still the same standard. The standard doesn't change with an appeal.

Alderman Ferrell: I would ask when we go to public comment, that we ask people to identify themselves and if they are a resident of the City of Fayetteville.

Alderman Lucas: Why did you feel it was justified to give them a year extension?

Jessie Fulcher: This is certainly a unique case. We have only seen one other extension or request in a project that was under development since 2004. The applicant provided a letter and noted several reasons, financial issues with funding through a banking institution, change in engineers, and a change in contractors. Based on that we felt it was good cause for a delay in the project construction.

Alderman Petty: Can only one extension be granted?

Jessie Fulcher: Yes, once a project is under construction the UDC provides the Planning Commission the ability to grant one extension up to two years.

John English, Representative for the developer gave a brief description of the project and why they are asking for an extension. He stated the economy crashed and our contractor was no longer in business and left us in lurch. Our engineer for the project also went out of business. We have a new engineer and negotiated a contract with a new development contractor. Our financial institution is on board to fully fund the project as well.

Alderman Rhoads: Is it the same financial institution you have had since day one?

John English: Yes, sir.

Mayor Jordan: From what I understand Planning staff is okay with this and the Planning Commission passed it.

Jessie Fulcher: Yes sir, on two occasions.

Mayor Jordan: The reason they couldn't meet their time line is because first they had to cut in roads, they were held up by the State, contractor replacement, funding was held up, they

DRAFT

reworked the stormwater plans, lost an engineer, then found a new engineer and had to redo new plans which cost time. Does that pretty much sum it up?

John English: Yes sir.

Mayor Jordan: We will be discussing why there's not a good cause, why they shouldn't be given this extension, not whether it affects property values, or that you don't like the project.

City Attorney Kit Williams: There is a single issue and that is whether they've shown good cause for the reasonable delay.

Holly Martin, 3229 W. Ika Lane, spoke in opposition of the project. She stated I would rather see homes on one acre lots.

Sharon Green stated she lived at 4565 W. Weir Road just west of the development.

Mayor Jordan: Do you live in the city limits?

Sharon Green: I am not in the city limits. I'm in the growth area. She spoke in opposition of the project. She asked the Council to vote for the appeal.

Alderman Ferrell asked Ms. Green is she had appeared before the Planning Commission.

Sharon Green: I did.

Alderman Lewis: Jessie what was the vote at the Planning Commission?

Jessie Fulcher: The first time they heard it was 7-1 the last one was 4-3.

Nadine Brannan, NW corner of Hugh Mountain Weir asked the Council to go for the appeal. I don't believe in one year they can accomplish what they couldn't in four years.

Ed Love, Chambers Bank stated financing is in place to finish the project.

Alderman Lewis: Has financing been in placed for the last three years? Have you been the representative all along?

Ed Love: We have.

Alderman Lewis: Has it always been in place?

Ed Love: Financing has always been there but there was a time when working on this project might not have been the best thing to do. However they were delayed significantly by the contractor and engineer going out of business. For the vast majority of the delay period they couldn't have gone forward had we ordered them to because there was no contractor or engineer.

DRAFT

Mayor Jordan: You believe it is still a good project.

Ed Love: Yes sir, we do.

Charles Taunton, 2900 N. Pyrite Drive spoke in opposition of the project.

Alderman Ferrell: Sir, do you live in the city limits?

Charles: Yes.

Garland Yell, Resident of Fayetteville and adjoining property owner of the project, spoke in opposition of the project. He has had lots of other projects in the area that started after this one that were completed.

Alderman Lewis asked the developer if he had other projects in the area that he was managing at the same time.

John English: Yes ma'am.

Alderman Lewis: Did you have similar difficulties?

John English: We have had difficulties with contracting with other contractors. There is not a project that goes 100% smoothly.

Alderman Petty stated the email from Juliet Richey says that you haven't submitted any documents since the last email. You still don't have an engineer on record. You stated you do have an engineer. Can you explain that discrepancy?

John English: We have a contract with an engineer. Ms. Richey has not had contact with that engineer because we would prefer not to employ him very much further before knowing that we have your approval to proceed with the project. There is no reason to pay an engineer if we do not have City approval to continue the project. I hope that the Council agrees with the Planning Commission and approves the project so we can move forward. If you are concerned about timing then you could give us more than a year to finish.

Alderman Petty stated he wanted to give the developer the benefit of the doubt but he was not convinced that they have done everything in their power to get the project completed.

Alderman Lucas stated she has a struggle with three to four years and a project is not moving along.

Alderman Lewis: When did you break ground?

John English: Middle of 2007.

DRAFT

Alderman Lewis: When you broke ground what type of best management practices were taken as a result of breaking ground?

John English: We do stormwater management because as soon as you disturb the soil you want to be able manage any stormwater run off. This site has a large area of stormwater detention. There is a big area that is low and that is part of what had to be reworked engineering wise to work out well with the decentralized sewer system.

Alderman Lewis: When you saw that you weren't going to be able to do all these things did you reseed?

John English: We do some of that yes.

Alderman Ferrell: Could you wait two weeks on this?

John English: We are ready to move right now. I don't know what two weeks would offer to you.

Alderman Ferrell: It is up to you. We have an Alderman who says that if he can get some information he might feel more amenable to it.

John English: What Mr. Petty would like to see is all the paperwork filed with the County. Once we have your approval we will ask our engineer to get all the documentation to the County. If we don't have approval from the City to move forward then there is no reason for us to employ anyone and spend more.

City Attorney Kit Williams: Since this is an appeal unless there is a majority vote to grant the appeal and reverse the Planning Commission's decision than the Planning Commission's decision will stand.

Alderman Rhoads: Of yes votes.

City Attorney Kit Williams: Votes to grant the appeal and to not allow the extension.

Alderman Ferrell: A yes for the appeal is what would require a majority?

City Attorney Kit Williams: Right, since it was granted by the Planning Commission it would take a majority of the City Council to reverse the Planning Commission.

Mayor Jordan: A no vote is against the appeal.

Alderman Lewis: It is a difficult position and I understand why it has been heard multiple times. In the process of the Planning discussion people in the development industry were not supportive of giving him the extension.

DRAFT

Alderman Ferrell: The Planning Commission voted for it and the Planning staff recommended it.

Alderman Lucas: It was 4-3.

Alderman Ferrell: But it passed.

Alderman Cook: He has had plenty of time to get it done but the economy has been bad and there is still some development going on. At this point it is guaranteed he has spent plenty of money to get to this point and he still has a bank on board that is willing to finance it. If he can't get it started in one year it's dead this is his only shot. I think giving him one year seems prudent.

Alderman Rhoads: I agree with that 100%.

Alderman Lewis moved to approve the appeal and deny the time extension. Alderman Lucas seconded the motion. Upon roll call the motion failed 3-5. Alderman Petty, Lucas, and Lewis voting yes. Alderman Cook, Rhoads, Ferrell, Gray, and Thiel voting no.

This appeal was denied.

Announcements:

Alderman Ferrell announced the dedication of the Doc Mashburn Park.

Alderman Lewis announced that the new Fayetteville Visitor's guide is out.

Meeting adjourned at 8:35 p.m.

Lioneld Jordan, Mayor	**Sondra E. Smith, City Clerk/Treasurer**

DRAFT

B.3 Added at the City Council Meeting July 6, 2010

Amend Chapter 97 Parks & Recreation

Parks & Recreation Department
Operational Policy
Donor Recognition Signs

It is pragmatic in a time of shrinking public dollars to seek outside funding in order to provide important capital improvements in Fayetteville Parks. It is essential to have specific boundaries and criteria in establishing fair and proper recognition of significant donations and gifts. This policy sets guidelines for the amount of the donation in relation to the recognition granted from the City of Fayetteville. Each gift will be considered independently of subsequent gifts to determine appropriate category. Any exceptions to this policy must be approved by City Council. The sign size range in each of the categories provides Park Planners with the latitude to design signs recognizing donations based on site location and donor specific criteria. Recognition signs will be displayed for the life of the facility.

Category	Donation	Recognition in Park	Recognition on Trail
Copper	$5,000 up to $10,000	Press release of donation and plaque up to 1 square foot	Press release of donation and plaque up to 1 square foot
Bronze	$10,000 up to $25,000	Press release of donation, ribbon cutting ceremony, plaque or sign up to 4 square feet	Press release of donation, plaque or sign up to 2 square feet
Silver	$25,000 up to $50,000	Press release of donation, grand opening, right to name facility, sign up to 12 square feet	Press release of donation, ribbon cutting, sign up to 3 square feet
Gold	$50,000 up to $100,000	Press release of donation, grand opening, right to name facility, sign up to 16 square feet	Press release of donation, ribbon cutting, sign up to 4 square feet
Platinum	Over $100,000	City Council Approval	City Council Approval

City Process

1. Parks and Recreation Staff meets with donor to discuss donation including amount of donation, development of facility/amenity, recognition operational policy, naming rights (if applicable), sign appearance/style/construction, time requirements and other pertinent topics.
2. Request is presented for approval from Parks and Recreation Advisory Board.
3. Request presented to Planning Office.
4. Request presented to City Council for final approval.

Handed out at the City Council Meeting
7-6-10 Street Name Change.

Name suggestions for Shiloh name change:

Dave Taylor Drive--

Tami Trzeciak said "Dave (now deceased- died 5 years ago of brain cancer) was known by many families in the Fayetteville Area who had sons in little league and high school baseball in the last 20 plus years, as well as many who golfed at Razorback Park Golf Course over the 25 year period that he and his wife Lori owned and operated the golf course. His wife and sons are still in the area as are his parents (Bob& Barb Taylor) and his brother and their families. He was a hard working family man, loved and missed by his family and many friends.
Many people also liked this name

Fontaine Earle Drive-

Janet Bolin directed me to this info on him at the Encyclopedia or Arkansas History and Culture. He was a major in the Thirty-Fourth Arkansas Infantry from Cane Hill, Washington County. He fought in a number of Civil War battles in the Trans-Mississippi Theater and later served northwest Arkansas as a legislator (1866-1867), minister, teacher, administrator and author.

Mecklin Drive-

Susan Young works at Shiloh Museum lives in Ward 2(former Ward 4) liked Dave Taylor but also suggested Mecklin Drive for Robert Mecklin, the founder of the Far West Seminary(Civil-War era school)which was located on the present-day site of Razorback Golf Course.
Others liked this name

Guisinger Drive-

John Faucette suggested this name because he said "the Guisinger family has deep roots in Fayetteville, plus an heir still lives in Fayetteville. Louise Sager, and on top of that the Guisinger owned acreage on the Frontage road between the Farm Credit building and Williams Tractor and might have owned the land where the Farm Credit and Tractor place is located. Anyway, the land was the Guisinger Farm as I know it."
Many people also liked this name

Other suggestions

Old Shiloh Road
Farms End Road
Fairs Farm Road
Sonnoman Road
Arkansas Darter Drive
Painted Bunting Drive
Little Blue Heron Drive
Tall grass Prairie Drive
Wilson Springs Drive
Pine Drive
Southern Comfort Drive

I received over well 100 e-mails regarding the naming and am still receiving them. The over whelming consensus was the name should be either historic, nature, or with local sentiment, and have a nice sound, with "pizzazz. The over whelming consensus also (99.99 percent) said it should NOT be named after a business. One person was for the business name.

I also received phone calls stating:

Poor Principle to start naming Streets after businesses
Slippery slop other businesses will want streets named for them
It should be people who have done wonders
You did it for this company why not ours
Might as well be Sams Club or Williams Tractor
Creek near by (that is Clabber Creek but already we have a lot of Clabber Creek Divisions)

Want to thank everyone again for weighing in on this.

Mayor Lioneld Jordan

City Attorney Kit Williams

City Clerk Sondra Smith

Aldermen

Ward 1 Position 1 – Adella Gray
Ward 1 Position 2 – Brenda Thiel
Ward 2 Position 1 – Kyle B. Cook
Ward 2 Position 2 – Matthew Petty
Ward 3 Position 1 – Robert K. Rhoads
Ward 3 Position 2 – Robert Ferrell
Ward 4 Position 1 – Shirley Lucas
Ward 4 Position 2 – Sarah E. Lewis

Tentative Agenda
City of Fayetteville Arkansas
City Council Meeting
July 6, 2010

A meeting of the Fayetteville City Council will be held on July 6, 2010 at 6:00 PM in Room 219 of the City Administration Building located at 113 West Mountain Street, Fayetteville, Arkansas.

Call to Order

Roll Call

Pledge of Allegiance

Agenda Session Presentations:

1. Sales Tax Discussion – Don Marr

Mayor's Announcements, Proclamations and Recognitions:

Presentations, Reports and Discussion Items:

Agenda Additions:

A. Consent:

1. Approval of the June 15, 2010 City Council meeting minutes.

2. **Woolsey Aviation, Inc. D/B/A Million Air of Fayetteville:** A resolution authorizing and approving an airport use and lease agreement for fixed base operations with Woolsey Aviation, Inc. D/B/A Million Air of Fayetteville in the amount of $29,560.20.

3. **Ball Plaza Holdings, LLC:** A resolution approving a lease with Ball Plaza Holdings, LLC to rent space in the E.J. Ball Building to house the City of Fayetteville Information Technology Division's server room for the annual amount of $18,504.00.

4. **Street Name Change:** A resolution renaming a section of N. Shiloh Drive to N. Farm Credit Drive due to street realignment.

5. **Sweetser Construction, Inc.:** A resolution awarding bid and approving a contract with Sweetser Construction, Inc. in the amount of $285,811.00 for the construction of repairs to the Lake Wilson spillway, and approving a 15% project contingency.

6. **Garver, LLC Amendment No. 1:** A resolution approving contract Amendment No. 1 with Garver, LLC in the amount of $79,400.00 for construction phase services related to Lake Wilson Spillway Improvements.

7. **Ground Zero Construction, Inc.:** A resolution awarding bid and approving a contract with Ground Zero Construction, Inc. in the amount of $64,750.00 for construction of Hamestring Creek Tributary restoration through the Red Oak Park Supplemental Drainage Improvements Project, and approving a 15% project contingency.

8. **Amend Police Department Policies:** A resolution approving amendments to Fayetteville Police Department Policies 33.1 Training; 41.2.7 Department Response to Mentally Ill Subjects; and 44.2.4 School Resource Officers.

B. Unfinished Business:

1. **RZN 10-3566 (932 Garland):** An ordinance rezoning that property described in rezoning petition RZN 10-3566, for approximately 0.84 acres, located at 932 Garland Avenue from R-PZD, Residential Planned Zoning District 06-2256 (932 Garland), to R-O, Residential Office and RMF-40, Residential Multi-family, 40 units per acre. *This ordinance was left on the Second Reading at the June 15, 2010 City Council meeting.*

   Left on the Second Reading.

2. **ADM 09-3273 (Business Registry and License Program):** An ordinance to amend the Fayetteville code by enacting a chapter to create a business registry and to require annual business licenses for all businesses and non-profits with locations within Fayetteville. *This ordinance was left on the Second Reading at the June 15, 2010 City Council meeting.*

   Left on the Second Reading.

3. **Amend Chapter 97 Parks and Recreation:** An ordinance to amend Chapter 97 Parks and Recreation of the Code of Fayetteville to permit and regulate signs recognizing donor contributions. *This ordinance was left on the Second Reading at the June 15, 2010 City Council meeting.*

   Left on the Second Reading.

4. **Johnson Enhanced Water Service Contract:** A resolution to approve a 15 year contract for enhanced water service between Fayetteville and Johnson. *This resolution was tabled at the June 15, 2010 City Council meeting to the July 6, 2010 City Council meeting.*

5. **Johnson Sanitary Sewer Service Contract:** A resolution to approve a 15 year contract for sanitary sewer service between Fayetteville and Johnson. *This resolution was tabled at the June 15, 2010 City Council meeting to the July 6, 2010 City Council meeting.*

C. Public Hearing:

1. **Raze and Removal 890 S. Washington Ave.:** A resolution ordering the razing and removal of a dilapidated and unsafe structure owned by Ronald and Betty Ramirez located at 890 S. Washington Avenue in the City of Fayetteville, Arkansas and approving a budget adjustment of $4,149.00.

D. New Business:

1. **City of Johnson Agreement:** A resolution to approve an agreement with the City of Johnson concerning payment of $35,000.00 to Johnson, Johnson conveying .77 acres to Fayetteville, the cities mutual assistance in obtaining right-of-way for the Van Asche extension, budget adjustment of $35,000.00 and other purposes.

2. **Amend Chapter 33: Departments, Boards, Commissions, and Authorities:** An ordinance to amend Chapter 33 Department, Boards, Commissions and Authorities by enacting Title XXI, Fayetteville Arts Council into the Fayetteville Code.

3. **Amend Chapters 169: Physical Alteration of Land and Chapter 170: Stormwater Management, Drainage and Erosion Control:** An ordinance amending Chapter 169: Physical Alteration of Land and Chapter 170: Stormwater Management, Drainage and Erosion Control of Title XV of the Code of Fayetteville (Unified Development Code), to clarify stabilization requirements, require phased construction for sites larger than 20 acres, clarify re-vegetation requirements, clarify requirements for cut and fill slopes and retaining walls, define maintenance responsibility for stormwater management systems, restrict location of dirt and topsoil storage and define stabilization practices for dirt and topsoil storage, define a qualified inspector for erosion and sediment control best management practices, and require site plans for one and two family residences to contain a plan for erosion and sediment control and final on-site drainage.

4. **Amend Chapter 171: Streets and Sidewalks:** An ordinance amending the Unified Development Code Chapter 171: Streets and Sidewalks to amend and clarify sidewalk and driveway approach construction standards.

5. **Amend Chapter 177: Landscape Regulations:** An ordinance amending Title XV: Unified Development Code of the City of Fayetteville, to amend Chapter 177: Landscape Regulations in order to modify existing requirements and regulations that address perimeter landscaping for development.

6. **Ozark Transit Authority Interlocal Agreement:** An ordinance approving an amendment to the Interlocal Agreement providing for participation of the City of Fayetteville in the Ozark Transit Authority.

Announcements:

Adjournment:

NOTICE TO MEMBERS OF THE AUDIENCE

All interested parties may appear and be heard before the City Council. If you wish to address the City Council on an agenda item please queue behind the podium when the Chair asks for public comment. Once the chair recognizes you, go to the podium and give your name and address. Address your comments to the Chair, who is the presiding officer. The Chair will direct your comments to the appropriate elected official, staff member or others for response. Please keep your comments brief, to the point and relevant to the agenda item being considered so that everyone has a chance to speak.

Interpreters or TDD for hearing impaired are available for all City Council meetings, a 72 hour advance notice is required. For further information or to request an interpreter, please call 575-8330.

As a courtesy please turn off all cell phones and pagers.

A copy of the City Council agenda is available at accessfayetteville.org or in the office of the City Clerk, 113 West Mountain, Fayetteville, Arkansas.

City of Fayetteville Staff Review Form

City Council Agenda Items
and
Contracts, Leases or Agreements

7/6/2010
City Council Meeting Date
Agenda Items Only

Ray M. Boudreaux	Aviation	Transportation
Submitted By	**Division**	**Department**

Action Required:

Action Required: Approval of Lease renewal for Fixed Based Operations at Drake Field. Contact: Roger Woolsey, CEO / President, Woolsey Aviation, 8501 Telephone Rd, Houston, TX 77061, 713-640-4000.

2010 REVENUE

$ 29,560.20	$ 700,600.00	Chgs-Serv
Cost of this request	Category / Project Budget	Program Category / Project Name
5550.0955.4454.00	$ -	Airport Revenue
Account Number	Funds Used to Date	Program / Project Category Name
NA	$ 700,600.00	Airport
Project Number	Remaining Balance	Fund Name

Budgeted Item [X] **Budget Adjustment Attached** [ ]

Department Director — 6-10-10 Date

City Attorney — 6-11-10 Date

Finance and Internal Services Director — 6-11-2010 Date

Chief of Staff — 6-14-10 Date

Mayor — 6/15/10 Date

Previous Ordinance or Resolution # 117-05

Original Contract Date: 6/21/2005

Original Contract Number:

Received in City Clerk's Office 06-10-10P04:22 RCVD Kim

Received in Mayor's Office ENTERED 6/11/10 BCP

Comments:

Fayetteville
ARKANSAS
www.accessfayetteville.org

THE CITY OF FAYETTEVILLE, ARKANSAS
AVIATION DIVISION
4500 S School Ave, Ste F
Fayetteville, AR 72701
P (479) 718-7642

CITY COUNCIL MEMO

To: Mayor Jordan and City Council

Thru: Chief of Staff, Don Marr

Thru: Transportation Director, Terry Gulley

From: Ray M. Boudreaux, Aviation Director

Date: June 10, 2010

Subject: **Approve Million Air Lease renewal and Signature of the Mayor on Renewal.**

PROPOSAL: In accordance with the Lease agreement between the City and Million Air, negotiations were entered into in February 2010 to renew the agreement effective August 1, 2010. The results of those negotiations are attached for execution by the Mayor. The rent increases by $212.04 computed based on the change in the CPI since the last increase. The new rent is effective for the next two years. They asked for a 10 year renewal and the Airport Board agreed to the new ten year term with lease amounts the only negotiable item at the five year mark of the new term. Million Air has agreed more specifically to honor the terms of the fuel storage and into plane fee of Flying Investments. A small addition to their lease space in the Terminal was added to accommodate their new Military Training agreement and fuel sales contract.

RECOMMENDATION: Approve renewal and submit for signature of the Mayor.

BUDGET IMPACT: Monthly rent has increased by $212.04.

Attachments: Staff Review
Lease Renewal (2 copies)

RESOLUTION NO. _____

A RESOLUTION AUTHORIZING AND APPROVING AN AIRPORT USE AND LEASE AGREEMENT FOR FIXED BASE OPERATIONS WITH WOOLSEY AVIATION, INC. D/B/A MILLION AIR OF FAYETTEVILLE IN THE AMOUNT OF $29,560.20

BE IT RESOLVED BY THE CITY COUNCIL OF THE CITY OF FAYETTEVILLE, ARKANSAS:

Section 1. That the City Council of the City of Fayetteville, Arkansas hereby authorizes and approves an Airport Use and Lease Agreement for Fixed Base Operations with Woolsey Aviation, Inc. d/b/a Million Air of Fayetteville in the amount of $29,560.20. A copy of the Agreement is attached to this Resolution as Exhibit "A."

PASSED and **APPROVED** this 6th day of July, 2010.

APPROVED: ATTEST:

By: _____
LIONELD JORDAN, Mayor

By: _____
SONDRA E. SMITH, City Clerk/Treasurer

RECEIVED
JUN 10 2010
AIRPORT

AIRPORT USE AND LEASE AGREEMENT
for
FIXED BASE OPERATIONS

TEN YEAR RENEWAL OF
ORIGINAL USE AND LEASE AGREEMENT

By and Between

THE CITY OF FAYETTEVILLE, ARKANSAS

and

WOOLSEY AVIATION, INC.
d/b/a MILLION AIR OF FAYETTEVILLE

Effective Date – August 1, 2010

EXHIBIT
A

AIRPORT USE AND LEASE AGREEMENT for FIXED BASE OPERATIONS

TEN YEAR RENEWAL OF ORIGINAL USE AND LEASE AGREEMENT

By and Between

THE CITY OF FAYETTEVILLE, ARKANSAS
and
WOOLSEY AVIATION, INC.
d/b/a MILLION AIR OF FAYETTEVILLE

Effective Date – August 1, 2010

WHEREAS, the City of Fayetteville and Woolsey Aviation, Inc. entered into an Airport Use and Lease Agreement for Fuel and Line Services Fixed Base Operations at the Fayetteville Municipal (now Executive) Airport with Woolsey Aviation, Inc. d/b/a/ Million Air of Fayetteville on or about August 1, 2005; and

WHEREAS, paragraph 4 of said agreement gave both parties the right to a five year renewal option upon successful negotiation and mutual agreement of all rental terms prior to May 3, 2010; and

WHEREAS, both parties have negotiated and reached agreement to these rental terms and desire the original Lease Agreement be renewed and all other terms and conditions of that Agreement remain in full force and effect with the specific exceptions as expressly noted below.

NOW, THEREFORE, in consideration of the foregoing and all of the mutual pledges, consideration and covenants within this Renewal and within the original Airport Use and Lease Agreement of August 1, 2005, the City of Fayetteville and Woolsey Aviation, Inc. promise, pledge and covenant to enter into a ten (10) year renewal of the lease. Lease rates and rate increases will be reevaluated 90 days prior to the end of the first five years of the renewal period. Exceptions to the current agreement are as follows:

1. The Year 6 and 7 (September 1, 2010 through August 31, 2012) combined monthly rental for the Terminal, Fixed Base Operations Hangar and Ramp shall be **$5,912.04** pursuant to the terms of paragraph **5.8 Rental Payment Increases**. Rental increases for years 8, thru 15 shall be increased pursuant to the terms of paragraph 5.8 except as may be changed 90 days prior to the end of year five (5) of the renewal term.

2. Paragraph 2.1 Delete in its entirety and replace with the following: "The Premises. described as 4030.55 Square Feet, plus or minus, of the Airport Terminal Building plus non-exclusive use of areas in common with other tenants to include imaging and signage as approved by the Airport. Includes additional space (360 SF) added at renewal August 1, 2010 for use as needed to support the Air National Guard Training programs at no additional cost to the contract. Lessee shall provide executed documentation of such training agreement. If no such training agreement is presented by August 1, 2010, this space may be leased to another tenant.

Attachment 1 to this renewal document contains visual description of the demised Airport Terminal premises.

3. Paragraph **5.5 FBO Equipment Rent** shall be and hereby is deleted as all provisions therein have already been satisfied.

4. Paragraph **5.9 Payment of Revenues Collected for the Airport.** Since Landing Fees are no longer required by the Fayetteville Code, paragraph **5.9** is amended to remove all references to "Landing Fees". The remainder of paragraph 5.9 remains in full force and effect.

5. Paragraph **7.15 Pricing.** After the last sentence in this paragraph a final sentence shall be added as follows: "Lease Attachment Number Two (attached) to the Lease Agreement between the City and Flying Investments, LLC including an In-To-Plane fee of $.25 per gallon delivered into Flying Investments' planes shall be honored."

6. Paragraph **7.16 Self Service Fueling Station.** The second to the last sentence shall be deleted and be replaced as follows: "It is also agreed that the airport shall pay for the fuel at a cost plus delivery fee not to exceed $.25 per gallon."

7. Paragraph **24 Right to Terminate Not Exclusive.** The next to the last sentence shall be deleted and be replaced as follows: "All things equal, both parties have the right to give notice of termination of this agreement for the good of the parties with a minimum of 120 days notice to terminate."

8. Woolsey Aviation, Inc. and the City of Fayetteville hereby agree to renew the Airport Use and Lease Agreement entered into between the parties on or about August 1, 2005, for a term of ten (10) years (August 1, 2010 through July 31, 2020) on the exact terms and conditions as specified in the original lease agreement except as modified in paragraphs 1 through 6 above.

IN AGREEMENT with all the terms, promises, and conditions set out above, the parties sign their names below:

WOOLSEY AVIATION, INC.

By: _____
ROGER WOOLSEY

CEO/President
Title

WITNESS:

By: Laura Williams
Exec Asst
Title

Date Signed: 6-9-10

CITY OF FAYETTEVILLE

By: _____
LIONELD JORDAN, Mayor

ATTEST:

By: _____
SONDRA E. SMITH, City Clerk/Treasurer

Date Signed: _____

City of Fayetteville Staff Review Form

City Council Agenda Items
and
Contracts, Leases or Agreements

7/6/2010
City Council Meeting Date
Agenda Items Only

S. Huddleston	Information Technology	Finance
Submitted By	**Division**	**Department**

Action Required:

Approve lease agreement renewal with Ball Plaza Holdings, LLC for IT Data Center.

$ 18,504.00	$ 18,510.00	
Cost of this request	Category / Project Budget	Program Category / Project Name
1010-1710-5308.00	$ 7,704.00	
Account Number	Funds Used to Date	Program / Project Category Name
	$ 10,806.00	General
Project Number	Remaining Balance	Fund Name

Budgeted Item [X] **Budget Adjustment Attached** [ ]

Department Director — Date: 6-11-2010

City Attorney — Date: 6-14-10

Finance and Internal Services Director — Date: 6-14-2010

Chief of Staff — Date: 6-14-10

Mayor — Date: 6/15/10

Previous Ordinance or Resolution # 136-07

Original Contract Date: Jul-07

Original Contract Number:

Received in City Clerk's Office 06-14-10P01:28 RCVD
Kim

Received in Mayor's Office ENTERED 6/14/10

Comments:

Fayetteville
ARKANSAS
www.accessfayetteville.org

THE CITY OF FAYETTEVILLE, ARKANSAS
DEPARTMENT CORRESPONDENCE

CITY COUNCIL AGENDA MEMO

To: Mayor and City Council

Thru: Paul Becker, Finance Director

From: Scott Huddleston, IT Director

Date: June 14, 2010

Subject: EJ Ball Building Lease Agreement

PROPOSAL:

In July of 2007 the City entered into a lease agreement for space in the EJ Ball Building to house the City's primary datacenter. Prior to 2007, the City's datacenter was located in City Hall. In 2007, the City Hall location became insufficient for the City's datacenter due to physical space requirements, electrical capacity requirements, and cooling capacity. Building improvements to continue datacenter operations in the City Hall building were estimated in excess of $500,000. The EJ Ball space was originally designed for similar purpose and has provided the necessary infrastructure to maintain all of the City's data systems.

RECOMMENDATION:

Finance Department staff recommends that the City Council authorize the Mayor to renew the three year lease agreement for Space in the E.J. Ball Building.

BUDGET IMPACT:

Annual lease amount is $18,510.

RESOLUTION NO. _____

A RESOLUTION APPROVING A LEASE WITH BALL PLAZA HOLDINGS, LLC TO RENT SPACE IN THE E.J. BALL BUILDING TO HOUSE THE CITY OF FAYETTEVILLE INFORMATION TECHNOLOGY DIVISION'S SERVER ROOM FOR THE ANNUAL AMOUNT OF $18,504.00.

BE IT RESOLVED BY THE CITY COUNCIL OF THE CITY OF FAYETTEVILLE, ARKANSAS:

Section 1. That the City Council of the City of Fayetteville, Arkansas, hereby approves the attached lease with Ball Plaza Holdings, LLC to rent space in the E.J. Ball Building to house the City of Fayetteville Information Technology Division's Server Room for the annual amount of $18,504.00.

PASSED and **APPROVED** this 6th day of July, 2010.

APPROVED: ATTEST:

By: _____ By: _____
LIONELD JORDAN, Mayor **SONDRA E. SMITH**, City Clerk/Treasurer

LEASE AGREEMENT

This Lease Agreement is made and entered into by and between **Ball Plaza Holdings, LLC**, an Arkansas limited liability company ("**Landlord**") and **City of Fayetteville**, Arkansas ("**Tenant**").

For and in consideration of the mutual agreements and covenants hereinafter set forth, Landlord and Tenant do hereby agree as follows:

1. **PREMISES**: The Landlord hereby leases and demises to Tenant conditioned as set forth below, space in the EJ Ball building further described as: 112 W. Center Street, Fayetteville, Washington County, Arkansas the space to be occupied consisting of one thousand two hundred thirty four (1,234) square feet with the premises being located in the basement floor (B-10). Such portion of the aforedescribed building hereinafter referred to as the Premises.

2. **TERM**: The term of this Lease shall be for a period of three (3) years beginning on February 10, 2010 and ending on February 9, 2013.

3. **RENT:** The Tenant agrees to pay to the Landlord and the Landlord agrees to accept from the Tenant as rents for the Premises the sum of One Thousand Five Hundred Forty Two and 00/100 Dollars ($1,542.00) per month all inclusive of taxes, insurance, water and sanitation, due and payable on or before the first day of each month.

Tenant agrees to pay a late charge of ten percent (10%) of total rents if the rental payment is late.

The monthly rentals provided for under subparagraph (3) hereof shall be increased each lease year during the original and any extended term hereof by an amount to be determined as follows:

(a) At the end of each lease year the next yearly and monthly rent will increase by three percent (3%) over the previous year's rent.

(b) The term "Lease Year" as used herein shall mean the full twelve (12) calendar months of this Lease.

If the term of this lease does not commence on the first day of a calendar month, then the first month's rent shall be prorated based upon the number of days in the calendar month that the Tenant is entitled to possession of the Premises.

The Tenant shall pay upon signature of this lease the Landlord the sum of Zero Dollars ($0.00), the receipt of which will acknowledged by the Landlord in a receipt to Tenant.

It is understood and agreed that Landlord and Tenant have entered into this Lease Agreement for the full length of the term set forth above, and that Tenant's financial obligation is for that full term. Tenant acknowledges and agrees that Landlord has reasonably relied on this Lease Agreement and Tenant's obligation set forth herein in arranging for financing and in other matters regarding the Premises and the building of which the Premises is but a portion.

TMB

4. **OPTION TO RENEW LEASE**: If the Tenant shall have fully performed this Lease and shall not have been in default at any time during the original term hereof, the Tenant shall have three (3) options to extend this Lease for three (3) years each option. In order for the Tenant to exercise this option, in addition to meeting the above condition, the Tenant shall give written notice by certified mail addressed to the Landlord of such extension at least two (2) calendar months prior to the expiration of the original term hereof. If such notice is not received by Landlord within the specified time period, this Option to Renew shall automatically be exercised as stated above, or shall become null and void, at the discretion of Landlord. The monthly rents to be paid by Tenant during each "Lease Year" of this option period shall be negotiated.

5. **PURPOSE**: Said premises shall be used and occupied by Tenant only for the operation of general office purposes and computer database and for no other purpose or purposes without written consent of Landlord, Initial such consent not to be unreasonably withheld.

6. **COMPLIANCE WITH LAWS**: Tenant shall promptly comply with all laws and all lawful orders, ordinances and regulations affecting the Premises hereby leased, and the cleanliness, safety, occupation and use of same. No auction sales may be conducted in the herein demised Premises without the written consent of Landlord.

7. **FIXTURES**: Subject to the provisions hereof in the sections entitled "Ownership of Improvements" and "Security Agreement," any fixtures or other property of Tenant which may be placed either in, upon, affixed or attached to the Premises hereby demised by Tenant are to remain Tenant's property, and Tenant shall have the right to remove the same at any time prior to or upon vacating said Premises, provided Tenant immediately repair to Landlord's satisfaction any damage resulting from such removal.

8. **PROPER USE OF PREMISES**: Tenant shall not perform any acts or carry on any practice which may injure the building or be a nuisance or menace to others, and shall keep the Premises under its control, clean and free from rubbish and dirt of all kinds. Tenant agrees to use diligence in keeping trash and litter picked up on the premises, to keep Premises clear and free from rodents, bugs and vermin. Extermination is the responsibility of the Landlord. The Tenant shall not use or permit the use of any portion of said Premises for sleeping apartments, lodging room, cooking or for any immoral or unlawful purpose or purposes.

If Tenant fails to maintain the Premises in a neat, clean and orderly manner, Landlord may give Tenant written notice to do so, stating with particularity the deficiencies, and if Tenant fails or refuses to remedy the situation set forth in the written notice for a period of ten (10) days, Landlord may have such deficiencies corrected at the expense of the Tenant.

Initial:_____

TMD

9. **LANDLORD'S DUTY TO REPAIR**: Landlord agrees to replace and repair the exterior of the building, including the roof, exterior walls, exterior doors and windows and to make any repairs to the interior or exterior of Premises resulting from a structural defect or defects, as well as repairs to the electrical systems and/or plumbing, except such of the above as may be due to the negligence of Tenant, or its employees or agents. Landlord shall be responsible for maintenance, cleaning and control of all common areas in and around the building and Premises.

10. **SECURITY DEPOSIT**: Tenant has paid a security deposit in the sum of Zero Dollars ($0.00) which does not represent payment of the last month's rent but is rather a deposit to secure performance of all terms and conditions of this Lease, and to protect against default by Tenant of the obligations to keep Premises clean and undamaged. Said deposit will be returned after Tenant fulfills the term of this Lease or any extension thereof if the Premises are in good order, undamaged, and all rents are fully paid, including any additional sums due Landlord as a result of Landlord ordered repairs, cleaning or utility bills as provided for herein.

11. **TENANT'S DUTY TO REPAIR**: Landlord agrees to routine maintenance and/or replacement of heating and air conditioning systems, to include servicing twice a year, filters, belts, freon, fuses, and switches, during the term of this Lease and any renewals or extensions thereof.

Tenant also agrees to maintain and keep in good repair the interior of the herein leased Premises, including but not limited to all hardware, floor coverings, all interior paint and wall covering, decorations, glass and light bulbs, subject to reasonable wear and tear only.

If Landlord deems any repairs necessary to the interior of the leased Premises, it may request in writing that such repairs be made by the Tenant, if said repairs are not due to the negligence of Landlord or its agents. If said request is reasonable, and Tenant refuses and neglects to commence upon such repair and complete the same with reasonable dispatch, Landlord may make or cause such repairs to be made, and Tenant will forthwith on demand pay Landlord the costs, such costs to be payable as additional rent.

12. **SIGNS**: Sign size and design must be approved by Landlord and in strict compliance with the ordinance of the City of Fayetteville. All signs are purchased, erected and maintained by Tenant.

Tenant agrees not to use any advertising media such as loud speakers, phonographs, or radio broadcasts in a manner to be heard in the street or which is deemed objectionable by Landlord.

Tenant shall not install any exterior electrical fixtures, shades, awnings or decorations, build any fences, or paint without the previous written consent of Landlord. Portable signs shall not be placed on Premises.

Initial:_____

TMO

13. **ELECTRICAL EQUIPMENT**: If Tenant installs any electrical equipment which overloads the lines in the herein leased Premises, Tenant shall at its own expense, make whatever changes are necessary to comply with the requirements, if any of the insurance underwriter and city electrical inspector's department or other lawful authority. Tenant agrees not to install or use any electric grills, or other electrical equipment that contain a heating element which creates a fire hazard, unless said electrical equipment is used in connection with the underwriter's specifications. Tenant shall, at its own expense, provide any extra electrical services, if needed.

14. **ENTRY BY LANDLORD**: Landlord shall have the right to enter the leased premises at all reasonable hours with reasonable advance notice to the Tenant, Landlord agrees to covenants that he will not enter the leased Premises without the consent of Tenant except in the case of emergency.

15. **UTILITY COSTS**: Landlord agrees to pay for all utilities listed in paragraph three (3) of this lease. Tenant shall pay for all other utilities and any deposits required for the same.

16. **TENANT ALTERATIONS**: Tenant will not alter the said Premises (except repairs as aforesaid) and will not install any fixtures or equipment to be used in connection with Tenant's business which in any manner affect the demised Premises without having first obtained the written approval of Landlord as to the nature, installation, and location of such fixtures and equipment. In the event the occupancy and use of Premises by Tenant shall result in an increase in insurance rates on said Premises, building or contents over those for normal office occupancy, then Tenant shall be liable and hereby agrees to reimburse Landlord for any such increase.

17. **LANDLORD ALTERATIONS**: Landlord hereby reserves the right to alter Premises as may be required by any governmental authority or as may be required to preserve, maintain, and/or protect the building or Premises, provided that such alterations shall not interfere with the operation of Tenant's business or in the usefulness of the Premises to Tenant for the herein stated purposes.

18. **OWNERSHIP OF IMPROVEMENTS**: All alterations, additions and improvements which may be made by either of the above parties hereto upon the Premises and which in any manner are permanently attached to the floors, wall or ceilings, shall be considered the property of the Landlord and shall remain with the surrendered Premises as a part thereof without disturbance, molestation or injury at the termination of this Lease.

Any plumbing, wiring or fixtures installed in said Premises by Tenant which cannot be removed without incurably marring or injuring the same shall become a part of the Premises and belong to the Landlord.

Initial:_____

TMD

19. **TAXES**: All taxes and other charges assessed by reason of Tenant's business, occupation or profession shall be paid by Tenant. Tenant shall pay his personal property taxes.

20. **DESTRUCTION BY FIRE OR OTHER CASUALTY**: If the Premises shall be so damaged by fire or other peril specified in the so-called extended coverage insurance endorsement so as to be substantially destroyed, this Lease shall cease and come to an end at the option of either Landlord or Tenant by one giving the other written notice or cancellation, any unearned rent paid in advance by Tenant shall be apportioned as of the date of such destruction and be refunded to the Tenant. In the event no such notice of cancellation is given, after substantial destruction, and within the time specified therefor, this Lease shall remain in full force and effect. Following removal by Tenant of his effects from said Premises, Landlord shall proceed with making improvements to the Premises as soon as practical using due diligence to repair and restore the Premises to be in as good condition as it was immediately prior to such destruction. Rent which would accrue during the time said Premises are so destroyed and unTenantable shall abate.

In the event the Premises are only partially destroyed, but not substantially destroyed, by fire or other peril specified in the so-called extended coverage endorsement, this Lease shall remain in full force and effect, and the Premises shall be restored by Landlord with due diligence to as good condition as it was in immediately prior to such damage. A just proportion of the rent reserved herein, according to the nature and extent of the damage to said Premises and the extent of untenantability thereof, shall abate until the Premises shall have been so repaired and restored as aforesaid. If, however, the cost of repairing/replacing the Premises is unreasonable at the present rent and the parties cannot reach an agreement as to the rent, then this Lease shall be canceled.

21. **CONTINUED OCCUPANCY**: In the event Tenant remains in possession of the herein Leased Premises after the expiration of said Lease, and without executing a new lease, it shall be deemed to be occupying said Premises as a Tenant from month to month. The monthly rental due for any such period shall be equal to the rental due for the last full month of tenancy under the terms of this Lease times one hundred thirty percent (130%), until a new lease is executed or Tenant vacates the leased Premises.

22. **NON-WAIVER**: One or more waivers of Tenant's breach of any covenant or condition by Landlord shall not be constructed as a waiver of a further breach of the same covenant or condition, and the consent or approval shall not be deemed to waive or render unnecessary Landlord's consent or approval to any subsequent similar act by Tenant.

23. **PARKING**: Intentionally Omitted

24. **FORFEITURE**: In the event Tenant, at any time, shall fail to pay any installment of rent or any other sum of money due Landlord under this Lease, or in the event Tenant shall fail to perform or

Initial:_____
TAD

observe any other covenant, agreement, condition or undertaking herein contained on Tenant's part to be performed or observed for ten (10) days after notice thereof from Landlord, Landlord shall have the right to enter and take immediate and exclusive possession of the leased Premises. Whether or not Landlord shall have re-entered or regained possession of the Leased Premises, Landlord shall have the additional right, without further demand or notice to Tenant or any other person, for the payment of rent, possession or the curing of Premises or any part(s) thereof for the account of the Tenant, at one time or from time to time, for such rent(s) as shall be acceptable to Landlord. Landlord shall have the right to make, at the cost and expense of Tenant, such repairs, changes, alterations or additions in and to the leased Premises as it may deem necessary or advisable. In the event Landlord elects to relet the leased Premises or any part(s) thereof as aforesaid, said election shall not prevent Landlord from thereafter forfeiting this Lease.

In the event any default (for which notice has been given as aforesaid) which, because of its nature, cannot be completely cured or is not completely cured within said ten-day period, said default shall be deemed to have been remedied for the purposes of this paragraph if the correction thereof shall have been commenced within said ten-day period, and shall, when commenced, be diligently prosecuted to completion.

Whether or not the Landlord, having the right of re-entry as aforesaid, shall have elected to forfeit this Lease or to relet the leased Premises in whole or in part, Tenant shall continue and remain liable for that payment of all sums reserved to Landlord and for the performance of all covenants, agreements and undertakings of Tenant during the full period which otherwise would have constituted the lease term, including damages which Landlord may then or thereafter suffer to the full end of said term. Landlord may sue for and recover such delinquent rents, payments and damages or component items thereof, from time to time, to the end of any elapsed period, to the end of the full period which otherwise would have constituted the lease term, as Landlord may elect. If Landlord sues anticipatorily, the measure of recovery shall be the difference between the rent reserved and the fair rental value of the Premises for such residue of said term. Landlord shall not be deemed to have split his cause of action by any action of recovery under this article and shall have the right at any time after exercising any option given to Landlord, to exercise thereafter any other option hereunder, or such legal rights as Landlord would have in the absence of such options.

25. **NO ASSIGNMENT OR SUBLETTING**: Neither this Lease, nor any interest therein, nor any estate hereby shall pass to any trustee or receiver in bankruptcy, or to any other receiver or assigns for the benefit of creditors or otherwise by operation of law.

Further, Tenant understands that neither this Lease, nor any interest herein, nor any estate created hereby may be assigned, subleased, or in any way transferred or conveyed by Tenant herein, without the previous written consent of Landlord.

Initial:_____

TAD

26. **BANKRUPTCY OR ASSIGNMENT FOR CREDITORS**: If during the term of this Lease, Tenant shall file a voluntary petition in bankruptcy, or if any involuntary petition in bankruptcy shall be filed against Tenant, and Tenant, after notice and hearing thereon, is adjudicated bankrupt, or if hereafter Tenant make a voluntary assignment for the benefit of Tenant's general creditors, or if a receiver be appointed, after notice and hearing, to take charge of Tenant's business, or if any exception or attachment shall issue against Tenant, or any of Tenant's effects whatsoever, and shall not be released within thirty (30) days after notice of same, whereupon the said demised Premises shall be taken or attempted to be taken, then upon any of the events above set forth, this Lease shall terminate forthwith and Landlord shall be entitled to immediate possession of the Leases Premises.

In the event of termination as set forth in the preceding paragraph, Tenant agrees forthwith to pay unto Landlord, as liquidated damages, the difference between the value of the rent reserved in this Lease, at the time of such termination, and the fair rental value of the demised Premises for the residue of said term, which shall in no event be less than one-fifth (1/5) of the rental reserved for the residue of such term.

27. **NOTICE**: Whenever under this Lease provision is made for notice of any kind, it shall be deemed sufficient notice and service thereof if such notice to Tenant is in writing addressed to Tenant, at the Leased Premises, and deposited in the mail with postage prepaid, and if such notice to Landlord is in writing, addressed to 4100 Corporate Center Drive, Suite 103, Springdale, Arkansas 72762, deposited in the mail with postage prepaid. All rental payments shall be mailed to Ball Plaza Holdings, LLC, c/o Flake & Kelley Commercial, PO Box 990, Little Rock, AR 72201.

28. **SURRENDER**: At the expiration of said term, Tenant will quit and surrender the leased Premises, in as good state and condition as received, reasonable wear and tear and damage by fire or the elements or from causes beyond Tenant's control excepted. Tenant shall paint interior walls and clean carpet before surrendering Lease Premises to Landlord.

29. **RIGHT OF SUCCESSORS**: Each and every provision of this Lease shall bind and shall inure to the benefit of the parties hereto, their legal representative, heirs and successors.

30. **PARAGRAPH HEADINGS**: The paragraph headings, as to the contents of particular paragraphs herein, are inserted only for convenience and are in no way to be construed as part of this Lease, or as a limitation of the scope of the particular paragraphs to which they refer.

31. **LEGAL FEES**: Tenant hereby agrees and covenants to indemnify Landlord for any and all damages, loss, or harm suffered by Landlord as a result of Tenant's breach of any provision of this Lease Agreement; such sums shall include, but are not necessarily limited to, court costs, attorney fees, re-leasing expenses and cleanup.

Initial:_____

TMD

32. **TIME OF ESSENCE**: It is agreed that time is of the essence of this Lease.

33. **ENTIRE AGREEMENT**: This Lease, when signed, together with any documents referred to herein, approved in writing by both parties and made a part hereof, contains all the agreements and conditions made between the parties hereto and may not be modified orally, or in any other manner than by an agreement in writing, signed by all the parties hereto or their respective successors in interest. Tenant specifically understands that Landlord has no agent or other representative authorized to orally modify or amend this Lease Agreement or to make any oral representations which are binding on Landlord. Further, Tenant acknowledges that Tenant has not relied nor depended upon any opinions or statements made by anyone concerning the Premises or its use for a particular purpose.

34. **CONDEMNATION**: If any part of the demised Premises or if the building of which same are a part (even though no part of the Premises to be taken) be condemned for a public or quasi-public use by right of eminent domain, with or without litigation, or transferred by agreement in connection with such public or quasi-public use, this Lease, as to the part so taken, shall terminate as of the date title shall vest in the condemnor or, and the rent payable hereunder shall be adjusted so that Tenant shall be required to pay for the remainder of the term only such portion of such rent as the value of the part remaining after condemnation bears to the value of the entire premises at the date of condemnation; but in either such event Landlord shall have the option to terminate this Lease as of the date when title to the part so condemned vests in the condemnor.

All compensation awarded upon such condemnation or taking shall belong and be paid to Landlord, and Tenant shall have no claim thereto, and Tenant hereby irrevocably assigns and transfers to Landlord any right to compensation or damages to which Tenant may become entitled during the term hereof by reason of the condemnation of all or part of the demised Premises.

35. **SALE OF THE PREMISES**: In the event of a sale or conveyance by Landlord of the building containing the demised Premises or assignment of Senior Lease (if any), the same shall operate to release Landlord from any future liability upon any of the covenants or conditions, express or implied, herein contained in favor of Tenant, and in such event Tenant agrees to look solely to the responsibility of the successor in interest of Landlord. If any security be given by Tenant to secure faithful performance of Tenant's covenants in this Lease, Landlord may transfer the security as such to the purchaser of the reversion and thereupon Landlord shall be discharged from any further liability in reference thereto.

36. **ARKANSAS LAW**: This Lease shall in all respects be governed by the laws of the State of Arkansas.

Initial:_____

TAD

37. **DISCLOSURE:** Please remember that in transmitting this Lease Agreement to you it shall not be construed as an offer from the Owner to you, rather, upon execution by you and delivery to Owner or Flake & Kelley Commercial, the Lease Agreement shall be an offer from you to lease from the Owner on the terms and conditions set forth in the Lease Agreement. The Lease Agreement shall be binding upon the Owner only upon the execution by an authorized representative of Owner. Deposit by Owner or Flake & Kelley Commercial of any security deposit tendered with the Lease proposal shall not be deemed an express or implied acceptance of your proposal to lease. Flake & Kelley Commercial is agent for the Landlord.

IN WITNESS WHEREOF, the parties have hereunto set their hands and seals, this ____th day of March, 2010.

LANDLORD:

BALL PLAZA HOLDINGS, LLC
By: Ted Belden, Managing Member

Ted Belden

Date: June 14th 2010

TENANT:
City of Fayetteville

_____

By:
(PRINTED NAME)

Date: _____

Initial:_____

City of Fayetteville Staff Review Form

City Council Agenda Items
and
Contracts, Leases or Agreements

July 6th, 2010
City Council Meeting Date
Agenda Items Only

Susan K Pierce	Information Technology	Finance
Submitted By	**Division**	**Department**

Action Required:

Approval of a resolution to change the name on an existing section of N Shiloh Dr due to the re-alignment of the road at the Porter Rd exit.

$130.00	$ -	
Cost of this request	Category / Project Budget	Program Category / Project Name
2100 5315 5212 00	$ -	
Account Number	Funds Used to Date	Program / Project Category Name
	$ -	
Project Number	Remaining Balance	Fund Name

Budgeted Item [X] **Budget Adjustment Attached** [ ]

Paul A. Becker	6-14-2010	Previous Ordinance or Resolution #
Department Director	Date	
		Original Contract Date:
	6-15-10	Original Contract Number:
City Attorney	Date	
Paul A. Becker	6-15-2010	
Finance and Internal Services Director	Date	Received in City Clerk's Office 06-14-10P02:16 RCV
	6-15-10	
Chief of Staff	Date	
	6/15/10	Received in Mayor's Office ENTERED 6/15/10
Mayor	Date	

Comments:

CITY COUNCIL AGENDA MEMO

To: Mayor and City Council
Thru: Jeremy Pate, Development Services Director
From: Susan K. Pierce, GIS office, Information Technology Division
Date: June 03, 2010

Subject: Approval of a resolution to change the name of an abandoned segment of N Shiloh Dr to remove duplication of the street name.

RECOMMENDATION

Staff recommends that a segment of N Shiloh Dr be re-named to reduce any confusion that may be caused by duplicate street names.

BACKGROUND

Due to the re-alignment of N Shiloh Dr at the Porter Rd exit, there is an existing section of N Shiloh Dr that will be abandoned. If kept as is, there will be two parallel segments of N Shiloh Dr with the same address range. This will cause confusion for emergency responders. The abandoned segment of N Shiloh Dr needs a unique name. Farm Credit Services, the only business addressed off this section, has submitted the name "N Farm Credit Dr" which was approved by the Street Name & Address Committee on June 3rd, 2010.

BUDGET IMPACT

Approximately $130.00 for materials, equipment, and labor.

RESOLUTION NO. _____

A RESOLUTION RENAMING A SECTION OF N. SHILOH DRIVE TO N. FARM CREDIT DRIVE DUE TO STREET REALIGNMENT

BE IT RESOLVED BY THE CITY COUNCIL OF THE CITY OF FAYETTEVILLE, ARKANSAS:

Section 1. That the City Council of the City of Fayetteville, Arkansas hereby renames that section of N. Shiloh Drive between its intersection with the newly constructed and realigned N. Shiloh Drive and its intersection with N. Porter Road to N. Farm Credit Drive.

PASSED and **APPROVED** this 15th day of July, 2010.

APPROVED:

By: _____
LIONELD JORDAN, Mayor

ATTEST:

By: _____
SONDRA E. SMITH, City Clerk/Treasurer

Fayetteville
ARKANSAS
www.accessfayetteville.org

THE CITY OF FAYETTEVILLE, ARKANSAS

Monday, June 14, 2010

To Whom It May Concern:

Due to the re-alignment of N Shiloh Dr, the address for Farm Credit Services of Western Arkansas will have to be corrected to comply with emergency 911 addressing standards. The segment of road that gives access to the building will have to be re-named so that there is no street name duplication which may cause confusion for the emergency responders. The address number, itself, can stay the same (2209); however, the street name will definitely have to change. The City of Fayetteville can select a street name for this segment from the pre-approved street name list *or* Farm Credit Services may select a name from this list since it is the only affected entity on this segment. Farm Credit Services may also produce a name of their own, which must be approved by the Street Name & Address Committee.

Once a new name is decided upon, the GIS office will assist in the address change by notifying the following entities on behalf of Farm Credit Services: all basic utility companies, the Washington County Assessor, the Washington County Clerk, all e-911 agencies, and the U.S. Postal Service. The U.S. Postal Service will forward mail for up to one (1) year. Also, the GIS office will provide letters of verification of an address change to mortgage and/or insurance companies, if needed. The GIS office will notify Farm Credit Services of the date when this item will be on the City Council Agenda.

I have enclosed the City of Fayetteville's pre-approved street name list for review *or* Farm Credit Services may submit their own names for approval. I have also enclosed a map showing the area of concern.

Thank you for your time and cooperation.

Sincerely,

Susan K. Pierce
GIS E911 Address Coordinator

City of Fayetteville
GIS Office/ IT Division
113 W Mountain St
Fayetteville, AR 72701-6069
E-mail: spierce@ci.fayetteville.ar.us
Phone: 479-575-8391
Fax: 479-444-3427

New Street Name for N Shiloh DR

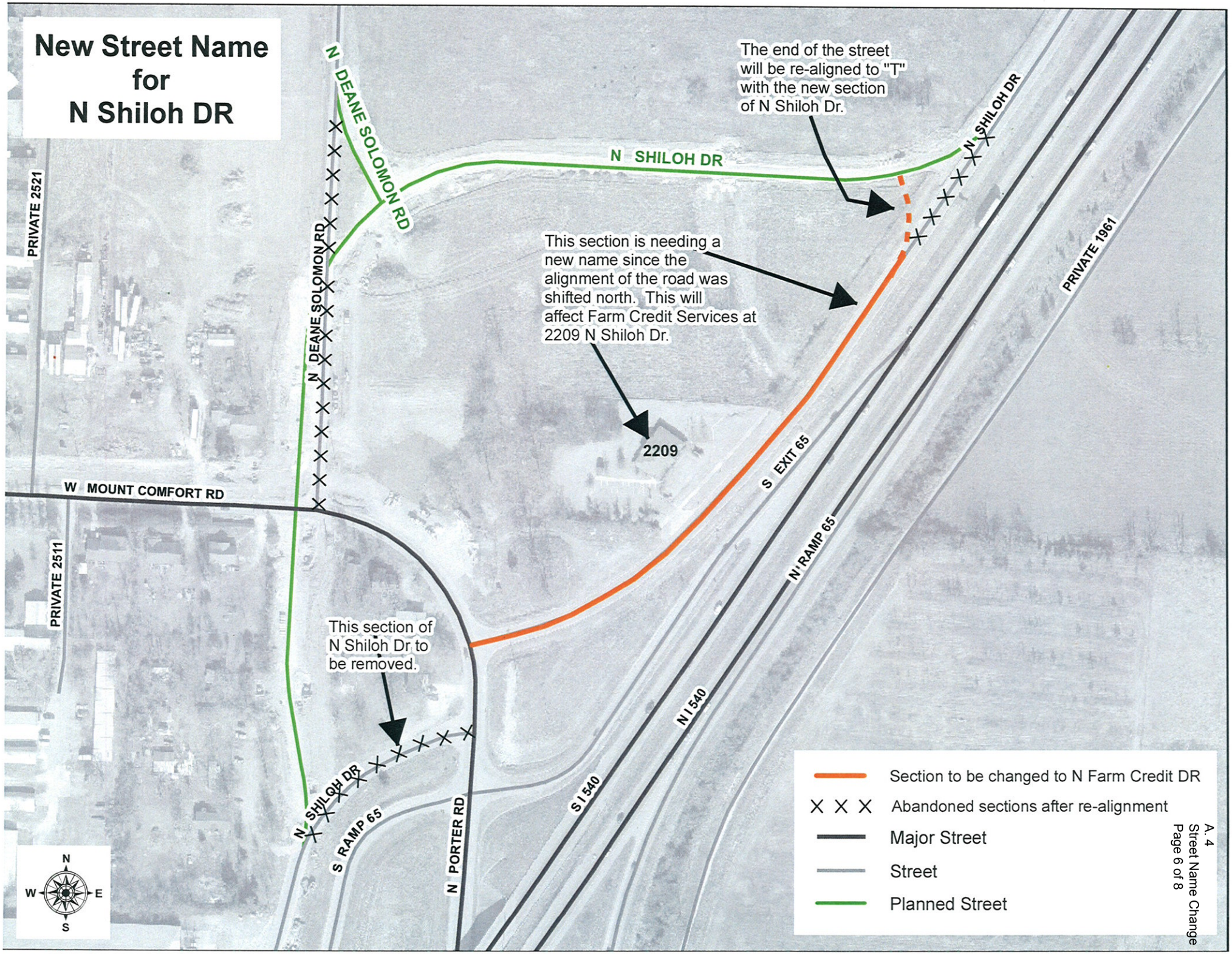

Street Name & Type	Department	Approval Yes	Approval No	Reason	Date
FARM CREDIT DR	Police KS	✓			6-3-10
	Fire				
	IT/GIS SKP	✓		4th name w/ "Farm" in it; 1st name starting w/ "Farm"	6/3/10
	Police				
	Fire				
	IT/GIS				
	Police				
	Fire				
	IT/GIS				
	Police				
	Fire				
	IT/GIS				
	Police				
	Fire				
	IT/GIS				
	Police				
	Fire				
	IT/GIS				

Name change for N Shiloh Dr
Re-alignment

Street Name & Type	Department	Approval Yes	Approval No	Reason	Date
FARM CREDIT DR	Police				
	Fire	✓		I'd really like to say no. This name could be confused with business	6/3/10
	IT/GIS Skip	✓		4th name w/ "Farm" in it; 1st name starting w/ "Farm"	6/3/10
	Police				
	Fire				
	IT/GIS				
	Police				
	Fire				
	IT/GIS				
	Police				
	Fire				
	IT/GIS				
	Police				
	Fire				
	IT/GIS				
	Police				
	Fire				
	IT/GIS				

Name change for N Shiloh Dr
Re-alignment

City of Fayetteville
Staff Review Form
City Council Agenda Items
or
Contracts

July 6, 2010
City Council Meeting Date

Sarah Wrede	Engineering	Development Services
Submitted By	Division	Department

Action Required:

A resolution to award a contract to Sweetser Construction, Inc in the amount of $ 285,811.00 for construction of repairs to the spillway at Lake Wilson and approve a project contingency of 15% of the construction bid.

$ 285,811.00	$ 400,000.00	Lake Wilson Spillway Repair
Cost of this request	Category / Project Budget	Program Category / Project Name
4470.9470.5817.00	$ 580.00	Bridge and Drainage Improvements
Account Number	Funds Used to Date	Program / Project Category Name
10014	$ 399,420.00	Sales Tax Capital Improvement Fund
Project Number	Remaining Balance	Fund Name

Budgeted Item [X] Budget Adjustment Attached [ ]

Department Director	06.10.2010 Date	Previous Ordinance or Resolution #
City Attorney	6-21-10 Date	Original Contract Date:
Finance and Internal Service Director	6-21-2010 Date	Original Contract Number:
Chief of Staff	6-23-10 Date	Received in City Clerk's Office 06-18-10A11:14 RCVD Kim G.
Mayor	6/23/10 Date	Received in Mayor's Office ENTERED 6/21/10

Comments:

Fayetteville ARKANSAS
www.accessfayetteville.org

THE CITY OF FAYETTEVILLE, ARKANSAS
DEPARTMENT CORRESPONDENCE

CITY COUNCIL AGENDA MEMO

Council Meeting of July 6, 2010

To: Mayor and City Council

Thru: Don Marr, Chief of Staff
Jeremy Pate, Development Services Director
Chris Brown, City Engineer

From: Sarah Wrede, Staff Engineer SW

Date: June 18, 2010

Subject: **A resolution to award a contract to Sweetser Construction, Inc. in the amount of $285,811.00 for construction of repairs to the spillway at Lake Wilson and approve a project contingency of 15% of the construction bid.**

PROPOSAL

In 2004, severe storms and flooding resulted in the partial collapse of a portion of the Lake Wilson spillway and downstream channel. The City applied for and received disaster relief funds from FEMA in order to "bring the dam structure back to its original structural integrity and comply with the historical preservation requirements and to bring it back to its original aesthetic appearance."

In August of 2009, City Council awarded a contract to Garver, LLC for engineering services associated with the rehabilitation of the Lake Wilson spillway. The final spillway repair design is complete and the bid for Construction of Lake Wilson Spillway Repairs was advertised on May 20, 2010 and May 27, 2010. Bids were received on June 16, 2010. Four bids were received, ranging from $761,894.00 to $285,811.00. The selected bidder was Sweetser Construction, Inc. at $285,811.00.

The City received a time extension for this project from FEMA Region VI until November 30, 2010. The contract time allotted for project construction is 180 calendar days. Assuming approval of the contract on July 6, 2010, the date for substantial completion of the project will be January 2, 2011 and the date for project completion and final payment will be February 1, 2011. The City anticipates requesting one more time extension to complete the project. Staying on schedule for construction is critical to ensure the government disaster relief funds.

RECOMMENDATION

Staff recommends approval of a construction contract with Sweetser Construction, Inc. in the amount of $285,811.00 for construction of repairs to the spillway at Lake Wilson. In addition, a contingency fund equaling 15% of the amount bid is recommended. Therefore, the total recommended construction funding is $328,682.65.

BUDGET IMPACT

$400,000 is budgeted in the Lake Wilson Spillway Repair Project funded through the Sales Tax Capital Improvement Program. FEMA will reimburse 75% of the funds based only on work for damage that occurred during the original 2004 disaster. The Arkansas Department of Emergency Management (ADEM) will reimburse 12.5%. The City is responsible for 12.5% of the total project costs. ADEM is in the process of making a final determination of whether the project scope meets the original intended scope to repair only damage from the 2004 disaster. Assuming all project expenses are eligible for FEMA and ADEM reimbursement, the City's cost for this project will be $71,748. Funds will be reimbursed based on documentation of actual costs submitted to ADEM upon completion of the project.

Project expenses are summarized below:

	Contracts for Services	Total contract expense	Reimbursable by EPA at 75%	Reimbursable by ADEM at 12.5%	City's portion, 12.5%
Project expenses to date, paid from disaster fund	Terracon	$ 13,745	$ 10,309	$ 1,718	$ 1,718
	Jacobs	$ 106,695	$ 80,021	$ 13,337	$ 13,337
	Garver, engineering design	$ 88,337	$ 66,253	$ 11,042	$ 11,042
Estimated upcoming project expenses, CIP	Garver, construction phase services	$ 79,400	$ 59,550	$ 9,925	$ 9,925
	Construction Contract	$ 285,811	$ 214,358	$ 35,726	$ 35,726
	Total Expenses	$ 573,988	$ 430,491	$ 71,748	$ 71,748

STATE OF ARKANSAS
DEPARTMENT OF EMERGENCY MANAGEMENT

BUILDING #9501
CAMP JOSEPH T. ROBINSON
NORTH LITTLE ROCK, ARKANSAS 72199-9600
(501) 683-6700
FAX (501) 683-7890
www.adem.arkansas.gov

MIKE BEEBE
GOVERNOR

DAVID MAXWELL
DIRECTOR

May 13, 2010

Chris Brown
City Engineer, Fayetteville
125 West Mountain
Fayetteville, AR 72701

RE: Lake Wilson Dam Repair (PW 388)
FEMA 1516-DR-AR

Dear Mr. Brown:

After meeting with Melinda Dunn, FEMA PA Branch Director for current disasters, it was determined that it is unnecessary for the City of Fayetteville to request a version of PW 388 be written to include the new construction estimate and engineering costs. Since this is a large project, funds will be paid based on the documentation of actual costs that are submitted to ADEM upon completion of the project. The city is free to put this project out to bid.

As a reminder:
-An extension was granted on this project until 11/30/10. If additional time is needed to complete this project, please ensure that a request is made in writing to ADEM before the November 30 deadline.
-Payment will be based only on the work for damage that occurred during disaster 1516. Please make sure that plans include only work for the original damage. If there is additional work, besides what is outlined in the scope of work for this project, please submit a request for an improved project.
-Please obtain/comply with all necessary permits.

If additional information is needed, please contact the Public Assistance staff at 501-683-6700 or recoverybranch@adem.arkansas.gov.

Sincerely,

Scott Bass
Deputy State Coordinating Officer

SB:jl

GARVER

1088 East Millsap Road
Fayetteville, AR 72703

TEL 479.527.9100
FAX 479.527.9101

www.GarverUSA.com

June 17, 2010

Chris Brown
City Engineer
City of Fayetteville
113 West Mountain Street
Fayetteville, AR 72701

Re: Lake Wilson Spillway Repairs – Recommendation of Award

Dear Mr. Brown:

Bids were received for the "Lake Wilson Spillway Repairs" project at the Fayetteville City Hall - Purchasing Department, Room 306, at 2:00 p.m. on June 16, 2010, and they were opened shortly after at the Fayetteville City Hall, Room 326. The bids have been checked for accuracy and for compliance with the contract documents. A tabulation of the bids received is enclosed with this letter.

A total of 4 bids were received on the project. Sweetser Construction, Inc. submitted the low bid for the project in the amount of $285,811.00. The Engineer's Opinion of Probable Cost was $355,000.00.

We believe that the bid submitted by Sweetser Construction, Inc. represents a good value for the City of Fayetteville. We recommend that the construction contract for the "Lake Wilson Spillway Repairs" be awarded to Sweetser Construction, Inc.

Please call me if you have any questions.

GARVER, LLC

Nathan Becknell, P.E.
Project Manager

Attachments: Bid Tabulations

L:\2009\09047080 - FyvAR Lake Wilson Spillway Repair\Correspondence\Outgoing\Brown 2010-06-17 Recommendation of Award.doc

LAKE WILSON SPILLWAY REPAIRS

June 16, 2010
Bid #10-34

#	Description	QTY	UNIT	Engineers Estimate		SWEETSER CONSTRUCTION		MOBLEY CONTRACTORS		FOCHTMAN ENTERPRISES		DEAN CROWDER CONSTRUCTION	
1	Clearing, Grubbing, and Demolition	1	LS	$ 5,000.00	$ 5,000.00	$ 22,200.00	$ 22,200.00	$ 5,637.61	$ 5,637.61	$ 80,000.00	$ 80,000.00	$ 52,290.00	$ 52,290.00
2	Rock Excavation	183	CY	$ 150.00	$ 27,450.00	$ 150.00	$ 27,450.00	$ 47.00	$ 8,601.00	$ 70.00	$ 12,810.00	$ 475.00	$ 86,925.00
3	Unclassified Excavation	1,267	CY (PQ)	$ 10.00	$ 12,670.00	$ 18.00	$ 22,806.00	$ 21.74	$ 27,544.58	$ 40.00	$ 50,680.00	$ 55.00	$ 69,685.00
4	Embankment	193	CY (PQ)	$ 30.00	$ 5,790.00	$ 15.00	$ 2,895.00	$ 18.44	$ 3,558.92	$ 60.00	$ 11,580.00	$ 78.00	$ 15,054.00
5	4" Topsoil Placement (Other Areas)	217	SY	$ 5.00	$ 1,085.00	$ 8.50	$ 1,844.50	$ 10.17	$ 2,206.89	$ 17.00	$ 3,689.00	$ 60.00	$ 13,020.00
6	Undercut and Stone Backfill	14	TON	$ 30.00	$ 420.00	$ 36.00	$ 504.00	$ 76.89	$ 1,076.46	$ 30.00	$ 420.00	$ 280.00	$ 3,920.00
7	Seeding and Mulching	0.11	AC	$ 3,000.00	$ 330.00	$ 1,800.00	$ 198.00	$ 5,250.00	$ 577.50	$ 5,000.00	$ 550.00	$ 45,000.00	$ 4,950.00
8	Erosion Control	1	LS	$ 3,000.00	$ 3,000.00	$ 1,800.00	$ 1,800.00	$ 25,164.77	$ 25,164.77	$ 7,700.00	$ 7,700.00	$ 38,108.00	$ 38,108.00
9	Mobilization (Shall not exceed 5% of total bid)	1	LS	$ 16,400.00	$ 16,400.00	$ 3,600.00	$ 3,600.00	$ 15,601.57	$ 15,601.57	$ 14,450.00	$ 14,450.00	$ 10,336.00	$ 10,336.00
10	Temporary Fencing and Gates	180	LF	$ 50.00	$ 9,000.00	$ 10.00	$ 1,800.00	$ 10.68	$ 1,922.40	$ 30.00	$ 5,400.00	$ 60.00	$ 10,800.00
11	Project Signs	1	EA	$ 1,000.00	$ 1,000.00	$ 800.00	$ 800.00	$ 1,090.75	$ 1,090.75	$ 1,100.00	$ 1,100.00	$ 1,320.00	$ 1,320.00
12	Tree Protection Fencing	200	LF	$ 5.00	$ 1,000.00	$ 7.50	$ 1,500.00	$ 6.94	$ 1,388.00	$ 11.00	$ 2,200.00	$ 17.00	$ 3,400.00
13	Spillway Step and Wing Walls	44	CY	$ 1,135.00	$ 49,940.00	$ 1,680.00	$ 73,920.00	$ 1,450.43	$ 63,818.92	$ 880.00	$ 38,720.00	$ 2,875.00	$ 126,500.00
14	Permanent Erosion Control	203	SY	$ 10.00	$ 2,030.00	$ 5.50	$ 1,116.50	$ 18.99	$ 3,854.97	$ 16.00	$ 3,248.00	$ 25.00	$ 5,075.00
15	Pressure Grouting	1	LS	$ 30,000.00	$ 30,000.00	$ 39,501.00	$ 39,501.00	$ 39,501.00	$ 39,501.00	$ 41,300.00	$ 41,300.00	$ 74,060.00	$ 74,060.00
16	Dumped Riprap	1,248	CY	$ 65.00	$ 81,120.00	$ 45.00	$ 56,160.00	$ 50.29	$ 62,761.92	$ 60.00	$ 74,880.00	$ 134.00	$ 167,232.00
17	Filter Blanket	1,223	SY	$ 5.00	$ 6,115.00	$ 2.00	$ 2,446.00	$ 5.41	$ 6,616.43	$ 14.00	$ 17,122.00	$ 11.00	$ 13,453.00
18	Riprap Grout	150	CY	$ 600.00	$ 90,000.00	$ 105.00	$ 15,750.00	$ 197.05	$ 29,557.50	$ 290.00	$ 43,500.00	$ 225.00	$ 33,750.00
19	Construction Control and Estimating	1	LS	$ 5,000.00	$ 5,000.00	$ 3,300.00	$ 3,300.00	$ 25,738.30	$ 25,738.30	$ 21,000.00	$ 21,000.00	$ 21,200.00	$ 21,200.00
20	Trench and Excavation Safety Systems	1	LS	$ 2,500.00	$ 2,500.00	$ 1,500.00	$ 1,500.00	$ 2,383.88	$ 2,383.88	$ 1.00	$ 1.00	$ 2,000.00	$ 2,000.00
21	No Parking Sign	1	EA	$ 150.00	$ 150.00	$ 250.00	$ 250.00	$ 242.43	$ 242.43	$ 211.00	$ 211.00	$ 500.00	$ 500.00
22	Insurance and Bonding	1	LS	$ 5,000.00	$ 5,000.00	$ 4,470.00	$ 4,470.00	$ 4,282.05	$ 4,282.05	$ 12,000.00	$ 12,000.00	$ 8,316.00	$ 8,316.00
	TOTAL BID				**$ 355,000.00**		**$ 285,811.00**		**$ 333,127.85**		**$ 442,561.00**		**$ 761,894.00**

GARVER

RESOLUTION NO. _____

A RESOLUTION AWARDING BID AND APPROVING A CONTRACT WITH SWEETSER CONSTRUCTION, INC. IN THE AMOUNT OF $285,811.00 FOR THE CONSTRUCTION OF REPAIRS TO THE LAKE WILSON SPILLWAY, AND APPROVING A 15% PROJECT CONTINGENCY

BE IT RESOLVED BY THE CITY COUNCIL OF THE CITY OF FAYETTEVILLE, ARKANSAS:

Section 1. That the City Council of the City of Fayetteville, Arkansas hereby awards the bid and approves a contract with Sweetser Construction, Inc. in the amount of $285,811.00 for the construction of repairs to the Lake Wilson spillway. A copy of the contract is attached as Exhibit "A."

Section 2. That the City Council of the City of Fayetteville, Arkansas hereby approves a fifteen percent (15%) project contingency.

PASSED and **APPROVED** this 6th day of July 2010.

APPROVED: ATTEST:

By: _____ By: _____

LIONELD JORDAN, Mayor **SONDRA E. SMITH**, City Clerk/Treasurer

DOCUMENT 00500 – AGREEMENT

BETWEEN OWNER AND CONTRACTOR

Contract Name/Title: LAKE WILSON SPILLWAY REPAIRS

Contract No.: _____

THIS AGREEMENT is dated as of the _____ day of _____ in the year 20__ by and between The City of Fayetteville, Arkansas and Sweetser Construction, Inc. (hereinafter called Contractor).

ARTICLE 1 - WORK

1.01 Contractor shall complete all Work as specified or indicated in the Contract Documents. The work under this Contract includes, but is not limited to:

Project includes earthwork, placement of approximately 1,250 cubic yards (CY) of riprap, concrete wingwalls and pressure grouting for improvements to the Lake Wilson Spillway. Improvements will consist primarily of repairing or replacing the remaining portion of the existing native stone spillway and stabilizing the adjacent channel.

ARTICLE 2 - ENGINEER

2.01 The Contract Documents have been prepared by GARVER who is here in after called Engineer. GARVER assumes all duties and responsibilities, and has the rights and authority assigned to Engineer in the Contract Documents in connection with completion of the Work in accordance with the Contract Documents.

ARTICLE 3 - CONTRACT TIME

3.01 TIME OF THE ESSENCE:

A. All time limits for milestones, if any, Substantial Completion, and completion and readiness for final payment as stated in the Contract Documents are of the essence of the Contract.

EXHIBIT
A

DOCUMENT 00500 – AGREEMENT (continued)

3.02 DATES FOR SUBSTANTIAL COMPLETION AND FINAL PAYMENT:

A. The Work will be Substantially Completed within **180** calendar days after the date when the Contract Times commence to run as provided in the GENERAL CONDITIONS, and completed and ready for final payment in accordance with the GENERAL CONDITIONS within **210** calendar days after the date when the Contract Times commence to run.

3.03 LIQUIDATED DAMAGES:

A. Owner and Contractor recognize that time is of the essence of this Agreement and that The City of Fayetteville will suffer financial loss if the Work is not completed within the time specified above, plus any extensions thereof allowed in accordance with the GENERAL CONDITIONS. The parties also recognize the delays, expense, and difficulties involved in proving the actual loss suffered by The City of Fayetteville if the Work is not Substantially Completed on time. Accordingly, instead of requiring any such proof, The City of Fayetteville and Contractor agree that as liquidated damages for delay (but not as a penalty) Contractor shall pay The City of Fayetteville Seven Hundred Fifty Dollars ($750.00) for each calendar day that expires after the time specified above in Paragraph 3.02 for Substantial Completion until the Work is Substantially Complete. After Substantial Completion, if Contractor shall neglect, refuse, or fail to complete the remaining Work within the time specified in Paragraph 3.02 for completion and readiness for final payment or any proper extension thereof granted by The City of Fayetteville, Contractor shall pay The City of Fayetteville Seven Hundred Fifty Dollars ($750.00) for each calendar day that expires after the time specified for completion and readiness for final payment.

ARTICLE 4 - CONTRACT PRICE

4.01 The CITY OF FAYETTEVILLE agrees to pay, and the CONTRACTOR agrees to accept, as full and final compensation for all work done under this agreement, the amount based on the prices bid in the Proposal (BID FORM) which is hereto

DOCUMENT 00500 – AGREEMENT (continued)

attached, for the actual amount accomplished under each pay item, said payments to be made in lawful money of the United States at the time and in the manner set forth in the Specifications.

4.02 As provided in the General Conditions estimated quantities are not guaranteed, and determinations of actual quantities and classifications are to be made by ENGINEER as provided in the General Conditions. Unit prices have been computed as provided in the General Conditions.

4.03 Changes, modifications, or amendments in scope, price or fees to this contract shall not be allowed without a prior formal contract amendment approved by the Mayor and the City Council in advance of the change in scope, cost or fees.

ARTICLE 5 - PAYMENT PROCEDURES

5.01 SUBMITTAL AND PROCESSING OF PAYMENTS:

A. Contractor shall submit Applications for Payment in accordance with the GENERAL CONDITIONS. Applications for Payment will be processed by Engineer as provided in the GENERAL CONDITIONS.

5.02 PROGRESS PAYMENTS, RETAINAGE:

A. The City of Fayetteville shall make progress payments on account of the Contract Price on the basis of Contractor's Applications for Payment as recommended by Engineer, on or about the 15th day of each month during construction. All such payments will be measured by the schedule of values established in the GENERAL CONDITIONS (and in the case of Unit Price Work based on the number of units completed) or, in the event there is no schedule of values, as provided in the General Requirements.

1. Prior to Substantial Completion, progress payments will be made in an amount equal to the percentage indicated below, but, in each case, less the aggregate of payments previously made and less such

DOCUMENT 00500 – AGREEMENT (continued)

amounts as Engineer shall determine, or The City of Fayetteville may withhold, in accordance with the GENERAL CONDITIONS.

a. 90% of Work Completed (with the balance being retainage). If Work has been 50% completed as determined by Engineer, and if the character and progress of the Work have been satisfactory to The City of Fayetteville and Engineer, The City of Fayetteville on recommendation of Engineer, may determine that as long as the character and progress of the Work subsequently remain satisfactory to them, there will be no additional retainage on account of Work subsequently completed, in which case the remaining progress payments prior to Substantial Completion will be an amount equal to 100% of the Work Completed less the aggregate of payments previously made; and

b. 100% of Equipment and Materials not incorporated in the Work but delivered, suitably stored, and accompanied by documentation satisfactory to The City of Fayetteville as provided in the GENERAL CONDITIONS.

2. Upon Substantial Completion, The City of Fayetteville shall pay an amount sufficient to increase total payments to Contractor to 95% of the Contract Price (with the balance being retainage), less such amounts as Engineer shall determine, or The City of Fayetteville may withhold, in accordance with the GENERAL CONDITIONS.

5.03 FINAL PAYMENT:

A. Upon final completion and acceptance of the Work in accordance with the GENERAL CONDITIONS, The City of Fayetteville shall pay the remainder of the Contract Price as recommended by Engineer and as provided in the GENERAL CONDITIONS.

DOCUMENT 00500 – AGREEMENT (continued)

ARTICLE 6 - CONTRACTOR'S REPRESENTATIONS

6.01 In order to induce The City of Fayetteville to enter into this Agreement, Contractor makes the following representations:

A. Contractor has examined and carefully studied the Contract Documents including the Addenda and other related data identified in the Bid Documents.

B. Contractor has visited the Site and become familiar with and is satisfied as to the general, local, and Site conditions that may affect cost, progress, performance, and furnishing of the Work.

C. Contractor is familiar with and is satisfied as to all federal, state, and local Laws and Regulations that may affect cost, progress, performance, and furnishing of the Work.

D. Contractor has carefully studied all:

(1) reports of explorations and tests of subsurface conditions at or contiguous to the Site and all drawings of physical conditions in or relating to existing surface or subsurface structures at or contiguous to the Site; and

(2) reports and drawings of a Hazardous Environmental Condition, if any, at the Site. Contractor acknowledges that The City of Fayetteville and Engineer do not assume responsibility for the accuracy or completeness of information and data shown or indicated in the Contract Documents with respect to Underground Facilities at or contiguous to the Site.

E. Contractor has obtained and carefully studied (or assumes responsibility of having done so) all such additional supplementary examinations, investigations, explorations, tests, studies, and data concerning conditions (surface, subsurface, and Underground Facilities) at or contiguous to the Site or otherwise which may affect cost, progress, performance, and furnishing of

DOCUMENT 00500 – AGREEMENT (continued)

the Work or which relate to any aspect of the means, methods, techniques, sequences, and procedures of construction to be employed by Contractor and safety precautions and programs incident thereto.

F. Contractor does not consider that any additional examinations, investigations, explorations, tests, studies, or data are necessary for the performing and furnishing of the Work at the Contract Price, within the Contract Times, and in accordance with the other terms and conditions of the Contract Documents.

G. Contractor is aware of the general nature of work to be performed by The City of Fayetteville and others at the Site that relates to the Work as indicated in the Contract Documents.

H. Contractor has correlated the information known to Contractor, information and observations obtained from visits to the Site, reports and drawings identified in the Contract Documents, and all additional examinations, investigations, explorations, tests, studies, and data with the Contract Documents.

I. Contractor has given Engineer written notice of all conflicts, errors, ambiguities, or discrepancies that Contractor has discovered in the Contract Documents and the written resolution thereof by Engineer is acceptable to Contractor.

J. The Contract Documents are generally sufficient to indicate and convey understanding of all terms and conditions for performance and furnishing of the Work.

ARTICLE 7 - CONTRACT DOCUMENTS

7.01 CONTENTS:

A. The Contract Documents which comprise the entire Agreement between The City of Fayetteville and Contractor concerning the Work consist of the

DOCUMENT 00500 – AGREEMENT (continued)

following and may only be amended, modified, or supplemented as provided in the GENERAL CONDITIONS:

1. This Agreement.

2. Exhibits to this Agreement (enumerated as follows):

   a. Notice to Proceed.

   b. Contractor's Bid.

   c. Documentation submitted by Contractor prior to Notice of Award.

3. Performance, Payment, and other Bonds.

4. General Conditions.

5. Supplementary Conditions.

6. Specifications consisting of divisions and sections as listed in table of contents of Project Manual.

7. Drawings consisting of a cover sheet and sheets as listed in the table of contents thereof, with each sheet bearing the following general title:

   LAKE WILSON SPILLWAY REPAIRS

8. Addenda numbers one (1) to _____(___), inclusive.

9. The following which may be delivered or issued after the Effective Date of the Agreement and are not attached hereto: All Written Amendments and other documents amending, modifying, or supplementing the Contract Documents pursuant to the GENERAL CONDITIONS.

DOCUMENT 00500 – AGREEMENT (continued)

ARTICLE 8 - MISCELLANEOUS

8.01 TERMS:

A. Terms used in this Agreement which are defined in the GENERAL CONDITIONS shall have the meanings stated in the GENERAL CONDITIONS.

8.02 ASSIGNMENT OF CONTRACT:

A. No assignment by a party hereto of any rights under or interests in the Contract Documents will be binding on another party hereto without the written consent of the party sought to be bound; and specifically but without limitation, moneys that may become due and moneys that are due may not be assigned without such consent (except to the extent that the effect of this restriction may be limited by Law), and unless specifically stated to the contrary in any written consent to an assignment, no assignment will release or discharge the assignor from any duty or responsibility under the Contract Documents.

8.03 SUCCESSORS AND ASSIGNS:

A. The City of Fayetteville and Contractor each binds himself, his partners, successors, assigns, and legal representatives to the other party hereto, its partners, successors, assigns, and legal representatives in respect to all covenants, agreements, and obligations contained in the Contract Documents.

8.04 SEVERABILITY:

A. Any provision or part of the Contract Documents held to be void or unenforceable under any Law or Regulation shall be deemed stricken, and all remaining provisions shall continue to be valid and binding upon The City of Fayetteville and Contractor, who agree that the Contract Documents shall be reformed to replace such stricken provision or part thereof with a valid and enforceable provision that comes as close as possible to expressing the intention of the stricken provision.

DOCUMENT 00500 – AGREEMENT (continued)

8.05 FREEDOM OF INFORMATION ACT:

A. City contracts and documents prepared while performing city contractual work are subject to the Arkansas Freedom of Information Act. If a Freedom of Information Act request is presented to the City of Fayetteville, the contractor will do everything possible to provide the documents in a prompt and timely manner as prescribed in the Arkansas Freedom of Information Act (A.C.A. §25-19-101 et. Seq.). Only legally authorized photocopying costs pursuant to the FOIA may be assessed for this compliance.

OTHER PROVISIONS: Not Applicable.

IN WITNESS WHEREOF, The City of Fayetteville and Contractor have signed this Agreement in quadruplicate. One counterpart each has been delivered to Contractor and Engineer. Two counterparts each has been delivered to The City of Fayetteville. All portions of the Contract Documents have been signed, initialed, or identified by The City of Fayetteville and Contractor or identified by Engineer on their behalf.

This Agreement will be effective on _____, 20__, which is the Effective Date of the Agreement.

CONTRACTOR Sweetser Construction, Inc.	CITY OF FAYETTEVILLE _____
By: _____	By: _____
Title: _____	Title: _____
(SEAL)	(SEAL)
Attest _____	Attest _____
Address for giving notices	Address for giving notices

DOCUMENT 00500 – AGREEMENT (continued)

590 W. Poplar
Fayetteville, AR 72703

License No. 0027470411

Agent for Service of process

(attach evidence of authority to sign and resolution or other documents authorizing execution of Agreement)

(If Contractor is a corporation, attach evidence of authority to sign.)

Approved As to Form:

By: _____

Attorney For: _____

END OF DOCUMENT 00500

A. 5
Sweetser Construction, Inc.
Page 18 of 18

City Of Fayetteville - Purchase Order (PO) Request

(Not a Purchase Order)

All purchases under $2500 shall be used on a P-Card unless medical or 1099 service related. (Call x256 with questions)

All PO Request shall be scanned to the Purchasing e-mail: Purchasing@ci.fayetteville.ar.us

Requisition No.:

Date: **6/18/2010**

P.O Number:

Expected Delivery Date:

Vendor #: **70670**

Vendor Name: **Sweetser Construction**

Mail Yes:__ No:____

Address:

Fob Point:

Taxable Yes:__ No:____

Quotes Attached Yes:_____ No:_____

City:

State:

Zip Code:

Ship to code: **PUR**

Divison Head Approval:

Requester: **Tandi Taylor**

Requester's Employee #: **3206**

Extension: **206**

Item	Description	Quantity	Unit of Issue	Unit Cost	Extended Cost	Account Numbers	Project/Subproject #	Inventory #	Fixed Asset #
1	**For the Construction of repairs to the spillway at**				**$285,811.00**	**4470.9470.5817.00**	**10014.1**		
2	**Lake Wilson**				**$0.00**				
3					**$0.00**				
4					**$0.00**				
5					**$0.00**				
6					**$0.00**				
7					**$0.00**				
8					**$0.00**				
9					**$0.00**				
10					**$0.00**				
*	Shipping/Handling		Lot		**$0.00**				

Special Instructions:

Subtotal: **$285,811.00**

Tax:

Total: **$285,811.00**

Approvals:

Mayor: _____

Department Director: _____

Purchasing Manager: _____

Finance & Internal Services Director: _____

Budget Manager: _____

IT Manager: _____

Dispatch Manager: _____

Utilities Manager: _____

Other: _____

Revised 1/2/2008

City of Fayetteville
Staff Review Form
City Council Agenda Items
or
Contracts

July 6, 2010
City Council Meeting Date

Sarah Wrede	Engineering	Development Services
Submitted By	Division	Department

Action Required:

Resolution Approving Contract Amendment No. 1 with Garver, LLC for Construction Phase Services Related to Lake Wilson Spillway Improvements in the amount of $79,400.

$ 79,400.00	$ 400,000.00	Lake Wilson Spillway Repair
Cost of this request	Category / Project Budget	Program Category / Project Name
4470.9470.5814.00	$ 580.00	Professional Services
Account Number	Funds Used to Date	Program / Project Category Name
10014	$ 399,420.00	Sales Tax Capital Improvement Fund
Project Number	Remaining Balance	Fund Name

Budgeted Item [X] Budget Adjustment Attached [ ]

Department Director	06.09.2010 Date	Previous Ordinance or Resolution #
City Attorney	6-21-10 Date	Original Contract Date:
Finance and Internal Service Director	6-21-2010 Date	Original Contract Number:
Chief of Staff	6-22-10 Date	Received in City Clerk's Office 06-17-10 P03:10 RCVD
Mayor	6/23/10 Date	Received in Mayor's Office ENTERED 6/21/10

Comments:

Fayetteville ARKANSAS
www.accessfayetteville.org

THE CITY OF FAYETTEVILLE, ARKANSAS
DEPARTMENT CORRESPONDENCE

CITY COUNCIL AGENDA MEMO

Council Meeting of July 6, 2010

To: Mayor and City Council

Thru: Don Marr, Chief of Staff
Jeremy Pate, Development Services Director
Chris Brown, City Engineer

From: Sarah Wrede, Staff Engineer

Date: June 9, 2010

Subject: **Resolution Approving Contract Amendment No. 1 with Garver, LLC for Construction Phase Services Related to Lake Wilson Spillway Improvements**

PROPOSAL

In August of 2009, the City awarded a contract to Garver, LLC for engineering services associated with the rehabilitation of the Lake Wilson spillway that was damaged by a storm event in 2004. The scope of this contract is complete and the City is seeking a contract for construction of the spillway repairs. Construction will begin in July of this year and is scheduled for completion by February of 2011. An amendment to the contract with Garver is needed at this time in order to establish construction phase services on the project, as detailed below.

The proposed amendment for construction phase services on the project will include: review of construction submittals, engineering support during construction, and resident inspection services. As is typical on these types of projects, construction phase services were not part of the original contract. It is now time to proceed with adding these services to the contract and establishing the fee for this work.

The contract amendment includes inspection services from Garver averaging 4 hours per day, 5 days per week for the length of the construction contract.

RECOMMENDATION

Staff recommends approval of Amendment No. 1 to Garver's contract in the amount of $79,400 for construction phase services.

BUDGET IMPACT

$400,000 is budgeted in the Lake Wilson Spillway Repair account. Construction Phase Services are an eligible expense for reimbursement from the Environmental Protection Agency (EPA) and Arkansas Department of Emergency Management (ADEM). FEMA will reimburse 75% of the funds based only on work for damage that occurred during the original 2004 disaster. The Arkansas Department of Emergency Management (ADEM) will reimburse 12.5%. The City is responsible for 12.5% of the total project costs. ADEM will make a final determination of whether the project scope meets the original intended scope to repair only damage from the

2004 disaster. Funds will be reimbursed based on documentation of actual costs submitted to ADEM upon completion of the project. Assuming all expenses incurred under this contract are reimbursable, the City's cost for this contract amendment will be $9,925.00.

RESOLUTION NO. _____

A RESOLUTION APPROVING CONTRACT AMENDMENT NO. 1 WITH GARVER, LLC IN THE AMOUNT OF $79,400.00 FOR CONSTRUCTION PHASE SERVICES RELATED TO LAKE WILSON SPILLWAY IMPROVEMENTS

BE IT RESOLVED BY THE CITY COUNCIL OF THE CITY OF FAYETTEVILLE, ARKANSAS:

Section 1. That the City Council of the City of Fayetteville, Arkansas hereby approves Contract Amendment no. 1 with Garver, LLC in the amount of $79,400.00 for construction phase services related to Lake Wilson spillway improvements. A copy of Contract Amendment No. 1 is attached as Exhibit "A."

PASSED and **APPROVED** this 6th day of July 2010.

APPROVED: ATTEST:

By: _____ By: _____

LIONELD JORDAN, Mayor **SONDRA E. SMITH**, City Clerk/Treasurer

STANDARD AMENDMENT TO AGREEMENT FOR PROFESSIONAL ENGINEERING SERVICES
CITY OF FAYETTEVILLE
FAYETTEVILLE, ARKANSAS
Project No. 09047080

CONTRACT AMENDMENT NO. 1

This Contract Amendment No. 1, dated _____, 2010 shall amend the original contract between the **CITY OF FAYETTEVILLE** (Owner) and **GARVER, LLC** (Engineer), dated September 15, 2009 referred to in the following paragraphs as the original contract.

This Contract Amendment No. 1 adds professional engineering and surveying services for the:

Improvements to the Lake Wilson Spillway consisting primarily of repairing and replacing the remaining portion of the existing native stone spillway to convey 0.29 of the PMF as calculated by others and provided to Garver by the City of Fayetteville.

The original contract is hereby modified as follows:

SECTION 2 – BASIC SERVICES OF GARVER

The following Sections supersede corresponding Sections in the original contract.

2.1 General

2.1.1.4 The Scope of Services to be furnished by GARVER during the Construction Phase is included in Section 2.4 hereafter and in Appendix A attached hereto and made a part of this Agreement.

2.4 Construction Phase

2.4.1 The Scope of Services to be furnished by GARVER during the Construction Phase is described in detail in Appendix A attached hereto and made a part of this Agreement.

SECTION 6 – PAYMENTS TO GARVER

The Not-to-Exceed amount as stated in *6.1 Compensation* shall be increased **$79,400** for the addition of the Construction Phase Services.

The following Section supersedes the corresponding Section in the original contract.

6.1.6 Construction Phase Services

For the Construction Phase Services described herein, CITY OF FAYETTEVILLE shall pay GARVER an amount estimated to be **$79,400**.

This Agreement may be executed in two (2) or more counterparts each of which shall be deemed an original, but all of which together shall constitute one and the same instrument.

OWNER	ENGINEER
CITY OF FAYETTEVILLE	**GARVER, LLC**
By: _____	By: _____
Title: _____	Title: SR VP
ATTEST: _____	ATTEST: _____

2.12 Construction Phase Services

During the construction phase of work, the Engineer will accomplish the following:

1. Issue a Notice to Proceed letter to the Contractor and attend preconstruction meeting.
2. Attend progress/coordination meetings with the Owner/Contractor.
3. Evaluate and respond to construction material submittals and shop drawings. Corrections or comments made by the Engineer on the shop drawings during this review will not relieve Contractor from compliance with requirements of the drawings and specifications. The check will only be for review of general conformance with the design concept of the project and general compliance with the information given in the contract documents. The Contractor will be responsible for confirming and correlating all quantities and dimensions, selecting fabrication processes and techniques of construction, coordinating his work with that of all other trades, and performing his work in a safe and satisfactory manner. The Engineer's review shall not constitute approval of safety precautions or constitute approval of construction means, methods, techniques, sequences, procedures, or assembly of various components. When certification of performance characteristics of materials, systems or equipment is required by the Contract Documents, either directly or implied for a complete and workable system, the Engineer shall be entitled to rely upon such submittal or implied certification to establish that the materials, systems or equipment will meet the performance criteria required by the Contract Documents.
4. Issue instructions to the Contractor on behalf of the Owner and issue necessary clarifications (respond to RFIs) regarding the construction contract documents.
5. Review the Contractor's progress payment requests based on the actual quantities of contract items completed and accepted, and will make a recommendation to the Owner regarding payment. The Engineer's recommendation for payment shall not be a representation that the Engineer has made exhaustive or continuous inspections to (1) check the quality or exact quantities of the Work; (2) to review billings from Subcontractors and material suppliers to substantiate the Contractor's right to payment; or (3) to ascertain how the Contractor has used money previously paid to the Contractor.
6. Maintain a set of working drawings and prepare and furnish record drawings.
7. Provide full-time resident construction observation services for the 210-calendar-day construction contract performance time. The proposed fee is based on approximately **4 hours per day, 5 days per week**, during the 210-calendar-day construction contract performance time. If the construction time extends beyond the time established in this agreement or if the Owner wishes to increase the time or frequency of the observation, the Owner will pay the Engineer an additional fee agreed to by the Owner and the Engineer.
8. Provide up to **16 hours** of survey crew time for field checking quantities, contractor's layout, etc.
9. When authorized by the Owner, prepare change orders for changes in the work from that originally provided for in the construction contract documents. If redesign or substantial engineering or surveying is required in the preparation of these change order documents, the Owner will pay the engineer an additional fee to be agreed upon

by the Owner and the Engineer.

10. Participate in final project inspection, prepare punch list, review final project closing documents, and submit final pay request.

Construction observation services will be provided by the Engineer's Resident Project Representative, who will provide or accomplish the following:

- Consult with and advise the Owner during the construction period.
- Coordinate with the firm providing construction materials quality assurance testing under separate contract with the Owner.
- Maintain a file of quantities incorporated into the work, test reports, certifications, shop drawings and submittals, and other appropriate information.
- Maintain a project diary which will contain information pertinent to each site visit.

In performing construction observation services, the Engineer will endeavor to protect the Owner against defects and deficiencies in the work of the Contractor(s); but the Engineer cannot guarantee the performance of the Contractor(s), nor be responsible for the actual supervision of construction operations or for the safety measures that the Contractor(s) takes or should take. However, if at any time during construction the Engineer observes that the Contractor's work does not comply with the construction contract documents, the Engineer will notify the Contractor of such non-compliance and instruct him to correct the deficiency and/or stop work, as appropriate for the situation. The Engineer will also record the observance, the discussion, and the actions taken. If the Contractor continues without satisfactory corrective action, the Engineer will notify the Owner immediately, so that appropriate action under the Owner's contract with the Contractor can be taken.

2.14 Project Deliverables

The following additional items will be submitted to the Owner, or others as indicated, by the Engineer during the Construction Phase:

1. One hard copy set of Record Drawings.
2. Electronic files of Record Drawings as requested.

APPENDIX B

CITY OF FAYETTEVILLE
LAKE WILSON SPILLWAY REPAIR

CONSTRUCTION PHASE SERVICES

WORK TASK DESCRIPTION	E-6	E-5	E-4	E-3	E-2	E-1	T-1	S-5	S-4	S-3	S-2	S-1	2-Man Crew (Survey)	C-2	C-1	MANHOUR SUBTOTALS
	$214.00	$176.00	$145.00	$123.00	$104.00	$88.00	$69.00	$119.00	$94.00	$73.00	$55.00	$44.00	$154.00	$102.00	$83.00	
	hr	hr	hr	hr	hr	hr	hr	hr	hr	hr	hr	hr	hr	hr	hr	
1. Civil Engineering																
Prepare, Attend, and Document Preconstruction Meeting		2			4									2		
Progress Meetings with Contractor/City					12									4		
Monthly Pay Requests					8									14		
Shop Drawings/Material Submittals					12											
On-Site Meetings		4			10											
Resident Construction Observation (150 work days @ 4 hours per day)														600		
Field checking earthwork quantities, Contractor's layout, etc.								2	4				16			
Prepare Change Orders		1			6	6										
Final Project Inspection and Punchlist					4									2		
Record Drawings					4		12									
Subtotal - Civil Engineering	0	7	0	0	60	6	12	2	4	0	0	0	16	622	0	
2. Structural Engineering																
Response to Inquiries		2			6											
Shop Drawings		2			6											
Subtotal - Structural Engineering	0	4	0	0	12	0	0	0	0	0	0	0	0	0	0	
Hours	0	11	0	0	72	6	12	2	4	0	0	0	16	622	0	745
Salary Costs	$0.00	$1,936.00	$0.00	$0.00	$7,488.00	$528.00	$828.00	$238.00	$376.00	$0.00	$0.00	$0.00	$2,464.00	$63,444.00	$0.00	**$77,302.00**

SUBTOTAL - SALARIES:		**$77,302.00**
DIRECT NON-LABOR EXPENSES		
Document Printing/Reproduction/Assembly	$168.00	
Postage/Freight/Courier	$30.00	
Office Supplies/Equipment	$0.00	
Communications	$0.00	
Survey Supplies	$0.00	
Aerial Photography	$0.00	
GPS Equipment	$0.00	
Computer Modeling/Software Use	$0.00	
Traffic Counting Equipment	$0.00	
Travel Costs	$1,900.00	
SUBTOTAL - DIRECT NON-LABOR EXPENSES:		**$2,098.00**
SUBTOTAL:		**$79,400.00**
SUBCONSULTANTS FEE:		**$0.00**
TOTAL FEE:		**$79,400.00**

City of Fayetteville Staff Review Form

City Council Agenda Items
and
Contracts, Leases or Agreements

07/06/2010
~~6/29/2010~~
City Council Meeting Date
Agenda Items Only

CB Chris Brown	Engineering	Development Services
Submitted By	**Division**	**Department**

Action Required:

A resolution to award a contract to Ground Zero Construction, Inc. **in the amount of $** 64,750 **for the *Construction of Hamestring Creek Tributary Restoration Through Red Oak Park Supplemental Drainage Improvements* project and approve a project contingency of 15% of the Construction bid.**

$ 64,750	$ 443,534.00	Other Drainage Improvements/Red Oak Park
Cost of this request	Category / Project Budget	Program Category / Project Name
4470.9470.5817.00	$ 4,917.62	Bridge and Drainage Improvements
Account Number	Funds Used to Date	Program / Project Category Name
02108.0903	$ 438,616.38	Sales Tax Capital Improvement Project
Project Number	Remaining Balance	Fund Name

Budgeted Item [X] **Budget Adjustment Attached** [ ]

Department Director	06-10-2010 Date	Previous Ordinance or Resolution #
City Attorney	6-21-10 Date	Original Contract Date:
Finance and Internal Services Director	6-21-2010 Date	Original Contract Number:
Chief of Staff	6/23/10 Date	
Mayor	6/23/10 Date	

Received in City Clerk's Office 06-17-10P03:09 RCVD

Received in Mayor's Office ENTERED 6/21/10

Comments:

Fayetteville
ARKANSAS
www.accessfayetteville.org

THE CITY OF FAYETTEVILLE, ARKANSAS
DEPARTMENT CORRESPONDENCE

CITY COUNCIL AGENDA MEMO

Council Meeting of July 6, 2010

To: Mayor and City Council

Thru: Don Marr, Chief of Staff
Jeremy Pate, Development Services Director
Chris Brown, City Engineer

From: Glenn Newman, Staff Engineer

Date: June 18, 2010

Subject: A resolution to award a contract to **Ground Zero Construction, Inc.** for construction of drainage improvements for the *Construction of Hamestring Creek Tributary Restoration Through Red Oak Park Supplemental Drainage Improvements* project and approve a project contingency of 15% of the Construction Bid.

PROPOSAL:

The drainage channel through Red Oak Park and the downstream property leading to Hamestring Creek is suffering from erosion due to residential development in the watershed and the resulting increased storm water flows. Since the construction of the subdivisions upstream in the 1990's, the City of Fayetteville has added storm water detention ordinances to prevent the increases in peak flow that has caused erosion in this area.

The erosion problem has been evaluated numerous times since 2004. Recently, a solution evaluated through public meetings and agreed upon by the Corp of Engineers has been prepared. The project includes a combination of stone check dams, intake and outfall structures, and piping that ultimately decreases the velocity and reduces the erodible surface area. The Transportation Department will be performing the majority of the work by installing the stone check dams and piping. The Transportation Department's current workload does not allow for the required resources and skilled labor to construct the concrete control structures located at New Bridge Road and the concrete headwall at Hamestring Creek, therefore, bids were solicited for construction of these structures and are included in the proposed contract for consideration.

Bids were received on June 15, 2010, ranging from $ 64,750 to $ 99,500. The low bid of $ 64,750 was submitted by Ground Zero Construction, Inc.

RECOMMENDATION:

Staff recommends approval of a construction contract with Ground Zero Construction, Inc. in the amount of $ 64,750 for construction of drainage improvements for the Construction of Hamestring Creek Tributary

Restoration Through Red Oak Park Supplemental Drainage Improvements Project and approval of a project contingency of 15% of the Construction bid.

BUDGET IMPACT:

This construction contract will be funded with a portion of the Sales Tax Capital Improvement Project dedicated to drainage projects. Funding available in this project fund is approximately $440,600. The Total estimated cost of drainage improvements to Red Oak Park and downstream improvements including the contract and the improvements by the Transportation Division is estimated to be $ 219,433, with $ 56,741 coming from Parks and Recreation, and $ 162,692 coming from the *Other Drainage Improvements* project fund.

.

HAMESTRING CREEK
CONCRETE HEADWALL
OUTFALL STRUCTURE W/DEBRIS COLLECTION
NEW BRIDGE RD
INTAKE STRUCTURE
Fayetteville
ARKANSAS
HAMESTRING CREEK TRIBUTARY
RESTORATION THROUGH RED OAK PARK
SUPPLEMENTAL DRAINAGE IMPROVEMENTS

Hamstring Creek Tributary Restoration - Bid Tabulation

					Estimate		Ground Zero		Fochtman Enterprises		Tomlinson		Sweetser	
NO.	SPEC. REF	DESCRIPTION	UNIT	EST QTY	UNIT PRICE	TOTAL	UNIT PRICE	TOTAL	UNIT PRICE	TOTAL	UNIT PRICE	TOTAL	UNIT PRICE	TOTAL
1	112	Trench and Excavation Safety	LS	1	$1,150	$1,150	$500	$500	$1	$1	$500	$500	$500	$500
2	511	Mobilization	LS	1	$2,300	$2,300	$2,005	$2,005	$2,400	$2,400	$4,000	$4,000	$1,400	$1,400
3	700	Insurance and Bonding	LS	1	$2,300	$2,300	$2,561	$2,561	$3,910	$3,910	$2,500	$2,500	$1,100	$1,100
4	SP1	Intake Structure	LS	1	$14,375	$14,375	$13,066	$13,066	$11,900	$11,900	$22,000	$22,000	$12,641	$12,641
5	SP2	Outfall Structure	LS	1	$26,450	$26,450	$33,541	$33,541	$44,400	$44,400	$54,900	$54,900	$60,875	$60,875
6	SP3	Headwall Structure	LS	1	$8,625	$8,625	$13,077	$13,077	$11,460	$11,460	$15,600	$15,600	$16,500	$16,500
					Total	$55,200	Total	$64,750	Total	$74,071	Total	$99,500	Total	$93,016

RESOLUTION NO. _____

A RESOLUTION AWARDING BID AND APPROVING A CONTRACT WITH GROUND ZERO CONSTRUCTION, INC. IN THE AMOUNT OF $64,750.00 FOR CONSTRUCTION OF HAMESTRING CREEK TRIBUTARY RESTORATION THROUGH THE RED OAK PARK SUPPLEMENTAL DRAINAGE IMPROVEMENTS PROJECT, AND APPROVING A 15% PROJECT CONTINGENCY

BE IT RESOLVED BY THE CITY COUNCIL OF THE CITY OF FAYETTEVILLE, ARKANSAS:

Section 1. That the City Council of the City of Fayetteville, Arkansas hereby awards bid and approves a contract with Ground Zero Construction, Inc. in the amount of $64,750.00 for construction of Hamestring Creek Tributary restoration through the Red Oak Park Supplemental Drainage Improvements Project. A copy of the contract is attached as Exhibit "A."

Section 2. That the City Council of the City of Fayetteville, Arkansas hereby approves a fifteen percent (15%) project contingency.

PASSED and **APPROVED** this 6th day of July 2010.

APPROVED: ATTEST:

By: _____ By: _____

LIONELD JORDAN, Mayor **SONDRA E. SMITH**, City Clerk/Treasurer

DOCUMENT 00500 – AGREEMENT

BETWEEN OWNER AND CONTRACTOR

Contract Name/Title **CONSTRUCTION OF HAMESTRING CREEK TRIBUTARY RESTORATION THROUGH RED OAK PARK Supplemental DRAINAGE IMPROVEMENTS.**

Contract No.: _____

THIS AGREEMENT is dated as of the _____ day of _____ in the year 2010 by and between The City of Fayetteville, Arkansas and Ground Zero Construction, Inc. (hereinafter called Contractor).

ARTICLE 1 - WORK

1.01 Contractor shall complete all Work as specified or indicated in the Contract Documents. The work under this Contract includes, but is not limited to:

Installation of a 42 inch concrete headwall, concrete intake structure for a 66" storm drain pipe, and a concrete outfall structure with a "Snout" trash collection device over a 42" discharge pipe and miscellaneous related items.

ARTICLE 2 - ENGINEER

2.01 The Project has been designed by the City of Fayetteville, Engineering Division, who is hereinafter called Engineer. The Engineer assumes all duties and responsibilities, and has the rights and authority assigned to Engineer in the Contract Documents in connection with completion of the Work in accordance with the Contract Documents.

ARTICLE 3 - CONTRACT TIME

3.01 TIME OF THE ESSENCE:

A. All time limits for milestones, if any, Substantial Completion, and completion and readiness for final payment as stated in the Contract Documents are of the essence of the Contract.

EXHIBIT
A

DOCUMENT 00500 – AGREEMENT (continued)

3.02 DATES FOR SUBSTANTIAL COMPLETION AND FINAL PAYMENT:

A. The Work will be Substantially Completed within **30** calendar days after the date when the Contract Times commence to run as provided in the GENERAL CONDITIONS, and completed and ready for final payment in accordance with the GENERAL CONDITIONS within **45** calendar days after the date when the Contract Times commence to run.

3.03 LIQUIDATED DAMAGES:

A. Owner and Contractor recognize that time is of the essence of this Agreement and that The City of Fayetteville will suffer financial loss if the Work is not completed within the time specified above, plus any extensions thereof allowed in accordance with the GENERAL CONDITIONS. The parties also recognize the delays, expense, and difficulties involved in proving the actual loss suffered by The City of Fayetteville if the Work is not Substantially Completed on time. Accordingly, instead of requiring any such proof, The City of Fayetteville and Contractor agree that as liquidated damages for delay (but not as a penalty) Contractor shall pay The City of Fayetteville One Hundred Fifty Dollars ($150.00) for each calendar day that expires after the time specified above in Paragraph 3.02 for Substantial Completion until the Work is Substantially Complete. After Substantial Completion, if Contractor shall neglect, refuse, or fail to complete the remaining Work within the time specified in Paragraph 3.02 for completion and readiness for final payment or any proper extension thereof granted by The City of Fayetteville, Contractor shall pay The City of Fayetteville Seven Hundred Fifty Dollars ($750.00) for each calendar day that expires after the time specified for completion and readiness for final payment.

ARTICLE 4 - CONTRACT PRICE

4.01 The CITY OF FAYETTEVILLE agrees to pay, and the CONTRACTOR agrees to accept, as full and final compensation for all work done under this agreement, the amount based on the prices bid in the Proposal (BID FORM) which is hereto

attached, for the actual amount accomplished under each pay item, said payments to be made in lawful money of the United States at the time and in the manner set forth in the Specifications.

4.02 As provided in the General Conditions estimated quantities are not guaranteed, and determinations of actual quantities and classifications are to be made by ENGINEER as provided in the General Conditions. Unit prices have been computed as provided in the General Conditions.

4.03 Changes, modifications, or amendments in scope, price or fees to this contract shall not be allowed without a prior formal contract amendment approved by the Mayor and the City Council in advance of the change in scope, cost or fees.

ARTICLE 5 - PAYMENT PROCEDURES

5.01 SUBMITTAL AND PROCESSING OF PAYMENTS:

A. Contractor shall submit Applications for Payment in accordance with the GENERAL CONDITIONS. Applications for Payment will be processed by Engineer as provided in the GENERAL CONDITIONS.

5.02 PROGRESS PAYMENTS, RETAINAGE:

A. The City of Fayetteville shall make progress payments on account of the Contract Price on the basis of Contractor's Applications for Payment as recommended by Engineer, on or about the 15th day of each month during construction. All such payments will be measured by the schedule of values established in the GENERAL CONDITIONS (and in the case of Unit Price Work based on the number of units completed) or, in the event there is no schedule of values, as provided in the General Requirements.

1. Prior to Substantial Completion, progress payments will be made in an amount equal to the percentage indicated below, but, in each case, less the aggregate of payments previously made and less such

DOCUMENT 00500 – AGREEMENT (continued)

amounts as Engineer shall determine, or The City of Fayetteville may withhold, in accordance with the GENERAL CONDITIONS.

a. 90% of Work Completed (with the balance being retainage). If Work has been 50% completed as determined by Engineer, and if the character and progress of the Work have been satisfactory to The City of Fayetteville and Engineer, The City of Fayetteville on recommendation of Engineer, may determine that as long as the character and progress of the Work subsequently remain satisfactory to them, there will be no additional retainage on account of Work subsequently completed, in which case the remaining progress payments prior to Substantial Completion will be an amount equal to 100% of the Work Completed less the aggregate of payments previously made; and

b. 100% of Equipment and Materials not incorporated in the Work but delivered, suitably stored, and accompanied by documentation satisfactory to The City of Fayetteville as provided in the GENERAL CONDITIONS.

2. Upon Substantial Completion, The City of Fayetteville shall pay an amount sufficient to increase total payments to Contractor to 95% of the Contract Price (with the balance being retainage), less such amounts as Engineer shall determine, or The City of Fayetteville may withhold, in accordance with the GENERAL CONDITIONS.

5.03 FINAL PAYMENT:

A. Upon final completion and acceptance of the Work in accordance with the GENERAL CONDITIONS, The City of Fayetteville shall pay the remainder of the Contract Price as recommended by Engineer and as provided in the GENERAL CONDITIONS.

DOCUMENT 00500 – AGREEMENT (continued)

ARTICLE 6 - CONTRACTOR'S REPRESENTATIONS

6.01 In order to induce The City of Fayetteville to enter into this Agreement, Contractor makes the following representations:

A. Contractor has examined and carefully studied the Contract Documents including the Addenda and other related data identified in the Bid Documents.

B. Contractor has visited the Site and become familiar with and is satisfied as to the general, local, and Site conditions that may affect cost, progress, performance, and furnishing of the Work.

C. Contractor is familiar with and is satisfied as to all federal, state, and local Laws and Regulations that may affect cost, progress, performance, and furnishing of the Work.

D. Contractor has carefully studied all:

(1) reports of explorations and tests of subsurface conditions at or contiguous to the Site and all drawings of physical conditions in or relating to existing surface or subsurface structures at or contiguous to the Site; and

(2) reports and drawings of a Hazardous Environmental Condition, if any, at the Site. Contractor acknowledges that The City of Fayetteville and Engineer do not assume responsibility for the accuracy or completeness of information and data shown or indicated in the Contract Documents with respect to Underground Facilities at or contiguous to the Site.

E. Contractor has obtained and carefully studied (or assumes responsibility of having done so) all such additional supplementary examinations, investigations, explorations, tests, studies, and data concerning conditions (surface, subsurface, and Underground Facilities) at or contiguous to the Site or otherwise which may affect cost, progress, performance, and furnishing of

the Work or which relate to any aspect of the means, methods, techniques, sequences, and procedures of construction to be employed by Contractor and safety precautions and programs incident thereto.

F. Contractor does not consider that any additional examinations, investigations, explorations, tests, studies, or data are necessary for the performing and furnishing of the Work at the Contract Price, within the Contract Times, and in accordance with the other terms and conditions of the Contract Documents.

G. Contractor is aware of the general nature of work to be performed by The City of Fayetteville and others at the Site that relates to the Work as indicated in the Contract Documents.

H. Contractor has correlated the information known to Contractor, information and observations obtained from visits to the Site, reports and drawings identified in the Contract Documents, and all additional examinations, investigations, explorations, tests, studies, and data with the Contract Documents.

I. Contractor has given Engineer written notice of all conflicts, errors, ambiguities, or discrepancies that Contractor has discovered in the Contract Documents and the written resolution thereof by Engineer is acceptable to Contractor.

J. The Contract Documents are generally sufficient to indicate and convey understanding of all terms and conditions for performance and furnishing of the Work.

ARTICLE 7 - CONTRACT DOCUMENTS

7.01 CONTENTS:

A. The Contract Documents which comprise the entire Agreement between The City of Fayetteville and Contractor concerning the Work consist of the

DOCUMENT 00500 – AGREEMENT (continued)

following and may only be amended, modified, or supplemented as provided in the GENERAL CONDITIONS:

1. This Agreement.

2. Exhibits to this Agreement (enumerated as follows):

   a. Notice to Proceed.

   b. Contractor's Bid.

   c. Documentation submitted by Contractor prior to Notice of Award.

3. Performance, Payment, and other Bonds.

4. General Conditions.

5. Supplementary Conditions.

6. Specifications consisting of divisions and sections as listed in table of contents of Project Manual.

7. Drawings consisting of a cover sheet and sheets as listed in the table of contents thereof, with each sheet bearing the following general title:

   CONSTRUCTION OF HAMESTRING CREEK TRIBUTARY RESTORATION THROUGH RED OAK PARK Supplemental DRAINAGE IMPROVEMENTS

8. The following which may be delivered or issued after the Effective Date of the Agreement and are not attached hereto: All Written Amendments and other documents amending, modifying, or supplementing the Contract Documents pursuant to the GENERAL CONDITIONS.

DOCUMENT 00500 – AGREEMENT (continued)

ARTICLE 8 - MISCELLANEOUS

8.01 TERMS:

A. Terms used in this Agreement which are defined in the GENERAL CONDITIONS shall have the meanings stated in the GENERAL CONDITIONS.

8.02 ASSIGNMENT OF CONTRACT:

A. No assignment by a party hereto of any rights under or interests in the Contract Documents will be binding on another party hereto without the written consent of the party sought to be bound; and specifically but without limitation, moneys that may become due and moneys that are due may not be assigned without such consent (except to the extent that the effect of this restriction may be limited by Law), and unless specifically stated to the contrary in any written consent to an assignment, no assignment will release or discharge the assignor from any duty or responsibility under the Contract Documents.

8.03 SUCCESSORS AND ASSIGNS:

A. The City of Fayetteville and Contractor each binds himself, his partners, successors, assigns, and legal representatives to the other party hereto, its partners, successors, assigns, and legal representatives in respect to all covenants, agreements, and obligations contained in the Contract Documents.

8.04 SEVERABILITY:

A. Any provision or part of the Contract Documents held to be void or unenforceable under any Law or Regulation shall be deemed stricken, and all remaining provisions shall continue to be valid and binding upon The City of Fayetteville and Contractor, who agree that the Contract Documents shall be reformed to replace such stricken provision or part thereof with a valid and enforceable provision that comes as close as possible to expressing the intention of the stricken provision.

DOCUMENT 00500 – AGREEMENT (continued)

8.05 FREEDOM OF INFORMATION ACT:

A. City contracts and documents prepared while performing city contractual work are subject to the Arkansas Freedom of Information Act. If a Freedom of Information Act request is presented to the City of Fayetteville, the contractor will do everything possible to provide the documents in a prompt and timely manner as prescribed in the Arkansas Freedom of Information Act (A.C.A. §25-19-101 et. seq.). Only legally authorized photocopying costs pursuant to the FOIA may be assessed for this compliance.

OTHER PROVISIONS: Not Applicable.

IN WITNESS WHEREOF, The City of Fayetteville and Contractor have signed this Agreement in quadruplicate. One counterpart each has been delivered to Contractor and Engineer. Two counterparts each has been delivered to The City of Fayetteville. All portions of the Contract Documents have been signed, initialed, or identified by The City of Fayetteville and Contractor or identified by Engineer on their behalf.

This Agreement will be effective on _____, 2010, which is the Effective Date of the Agreement.

GROUND ZERO CONSTRUCTION, INC.	**CITY OF FAYETTEVILLE**
_____	_____
By: (print) _____	By: (print)_____
Title:_____	Title: _____
(SEAL)	(SEAL)
Attest _____	Attest _____

DOCUMENT 00500 – AGREEMENT (continued)

Address for giving notices

P. O. Box 830

Siloam Springs, Arkansas 72761

License No. 0148370510

Agent for Service of process

_____

(If Contractor is a corporation, attach evidence of authority to sign.)

Address for giving notices

113 West Mountain Street

Fayetteville, Arkansas 72701

(attach evidence of authority to sign and resolution or other documents authorizing execution of Agreement)

Approved As to Form:

By: _____

Attorney For: _____

END OF DOCUMENT 00500

City Of Fayetteville - Purchase Order (PO) Request

(Not a Purchase Order)

All purchases under $2500 shall be used on a P-Card unless medical or 1099 service related. (Call x256 with questions)

All PO Request shall be scanned to the Purchasing e-mail: Purchasing@ci.fayetteville.ar.us

Requisition No.:

Date: **6/9/2010**

P.O Number:

Expected Delivery Date:

Vendor #: **18754**

Vendor Name: **Ground Zero**

Mail Yes:__ No:____

Address:

Fob Point:

Taxable Yes:__ No:____

Quotes Attached Yes:_____ No:_____

City:

State:

Zip Code:

Ship to code: **pur**

Divison Head Approval:

Requester: **Tandi Taylor**

Requester's Employee #: **3062**

Extension: **206**

Item	Description	Quantity	Unit of Issue	Unit Cost	Extended Cost	Account Numbers	Project/Subproject #	Inventory #	Fixed Asset #
1	**Construction of Hamestring Creek Tributary Restoration**	**1**			**$64,750.00**	**4470.9470.5817.00**	**02108.0903**		
2	**Through Red Oak Park Supplemental Drainage Imp.**				**$0.00**				
3					**$0.00**				
4					**$0.00**				
5					**$0.00**				
6					**$0.00**				
7					**$0.00**				
8					**$0.00**				
9					**$0.00**				
10					**$0.00**				
*	Shipping/Handling		Lot		**$0.00**				

Special Instructions:

Subtotal: **$64,750.00**

Tax:

Total: **$64,750.00**

Approvals:

Mayor: _____

Department Director: _____

Purchasing Manager: _____

Finance & Internal Services Director: _____

Budget Manager: _____

IT Manager: _____

Dispatch Manager: _____

Utilities Manager: _____

Other: _____

City of Fayetteville Staff Review Form

City Council Agenda Items
and
Contracts, Leases or Agreements

7/6/2010
City Council Meeting Date
Agenda Items Only

Greg Tabor	Police	Police
Submitted By	**Division**	**Department**

Action Required:

Staff seeks council approval of a resolution to amend Fayetteville Police Department Policies: 33.1 Training, 41.2.7 Department Response to Mentally Ill Subjects and 44.2.4 School Resource Officers

$0		
Cost of this request	Category / Project Budget	Program Category / Project Name
Account Number	Funds Used to Date	Program / Project Category Name
	$ -	
Project Number	Remaining Balance	Fund Name

Budgeted Item ☐ **Budget Adjustment Attached** ☐

Department Director — Date 6-17-10

City Attorney — Date 6-21-10

Finance and Internal Services Director — Date 6-21-2010

Chief of Staff — Date 6-23-10

Mayor — Date 6/23/10

Previous Ordinance or Resolution # _____

Original Contract Date: _____

Original Contract Number: _____

Received in City Clerk's Office 06-17-10A10:45 RCVD Kim J.

Received in Mayor's Office ENTERED 6/22/10 PK.

Comments:

Fayetteville
ARKANSAS
www.accessfayetteville.org

THE CITY OF FAYETTEVILLE, ARKANSAS
POLICE DEPARTMENT
100 A West Rock Street
Fayetteville, AR 72701
P (479) 587-3555 F (479) 587-3522

To: Mayor Lioneld Jordan and City Council

From: Greg Tabor, Chief of Police

Date: Tuesday, June 8, 2010

Re: Police Department Policy Amendments

Recommendation:
Council approves a resolution amending Fayetteville Police Department Policies: 33.1 Training, 41.2.7 Department Response to Mentally Ill Subjects and 44.2.4 School Resource Officers

Background and Discussion:
The current Fayetteville Police Department Policies were approved by council resolution #3-99 on January 5th, 1999. The department is currently in the process of reviewing all policies and updating as necessary to conform to current practices and to comply with accreditation standards.

Budget Impact:
None

RESOLUTION NO. _____

A RESOLUTION APPROVING AMENDMENTS TO FAYETTEVILLE POLICE DEPARTMENT POLICIES 33.1 TRAINING; 41.2.7 DEPARTMENT RESPONSE TO MENTALLY ILL SUBJECTS; AND 44.2.4 SCHOOL RESOURCE OFFICERS

BE IT RESOLVED BY THE CITY COUNCIL OF THE CITY OF FAYETTEVILLE, ARKANSAS:

Section 1. That the City Council of the City of Fayetteville, Arkansas hereby approves amendments to Fayetteville Police Department Policies 33.1 Training, 41.2.7 Department Response to Mentally Ill Subjects, and 44.2.4 School Resource Officers. A copy of the amendments are attached hereto as Exhibit "A" and incorporated herein.

PASSED and **APPROVED** this 6th day of July, 2010.

APPROVED: ATTEST:

By: _____ By: _____
LIONELD JORDAN, Mayor **SONDRA E. SMITH**, City Clerk/Treasurer

FAYETTEVILLE POLICE DEPARTMENT
FAYETTEVILLE, ARKANSAS

POLICIES, PROCEDURES, AND RULES

Subject: 33.1 Training	**Effective Date:**
Reference:	Version: 1
CALEA: 33	No. Pages: 6

I. Purpose

The purpose of this directive is to establish procedures for the Fayetteville Police Department Training Program. The training program should be administered with three overall purposes in mind. First, well trained officers are generally better prepared to act decisively and correctly in a broad spectrum of situations. Second, training results in greater productivity and effectiveness. Third, training fosters cooperation and unity of purpose.

II. Policy

A. Administration

1. The training function of Fayetteville Police Department will be administrated by the Training Coordinator.

a. The Training Coordinator is the supervisor assigned to the training division.
b. The Training Coordinator's function is to ensure that the quality and quantity of training meet the goals of the department.
c. The Training Coordinator shall develop and evaluate training needs based on input from each division.

2. The following guidelines will apply to training attendance: [Calea 33.1.2]

a. The Training Coordinator will notify supervisors of upcoming training as soon as possible so that all personnel who may be required to attend the training will have as much advance notice as possible. Supervisors will ensure information is disseminated to affected personnel in a timely manner.
b. The Training Coordinator or supervisor may grant exceptions to attendance for reasonable excuses of conflicting nature to include court appearance, illness, departmental business and personal emergency. Personnel unable to attend mandatory training will be required to attend a scheduled make-up training session.
c. The Training Coordinator will document attendance of all personnel for all training programs.
d. Course coordinators will ensure that documentation of personnel who successfully complete any training course is submitted to the Training Coordinator. The Training Coordinator will then update the employee's training file and will ensure that the

EXHIBIT
A

proper course documentation is forwarded to the Arkansas Commission on Law Enforcement Standards and Training (CLEST).

e. All Fayetteville Police Department personnel attending training courses outside the department shall submit documentation of attendance to the Training Coordinator.
f. Reimbursements to employees attending training in respect to mileage, meals, housing, fees, books or materials will be provided in the Travel and Training Policy of the City of Fayetteville. [Calea 33.1.3]
g. The refusal or failure to complete the assigned training can result in disciplinary action against the employee.

3. Lesson plans for all training courses conducted by the Fayetteville Police Department will include the following: [Calea 33.1.4]

a. A statement of performance and job related objectives.
b. The content of the training and specification of the appropriate instructional techniques.
c. A process for approval of lesson plans.
d. Identification of tests used in the training process.

4. The department recognizes remedial training may be necessary to ensure employees do not suffer from deficiencies in basic skills, knowledge and abilities required to perform their assigned tasks: [Calea 33.1.5]

a. When, based on sound evidence, a supervisor has identified by testing or inspecting job performance that an employee has demonstrated a deficiency in basic ability to perform assigned tasks, and the supervisor has reason to believe that such deficiency may be corrected, he may direct that employee, in writing, to attend a specific remedial training program. [Calea 26.1.4(a)]
b. The supervisor will identify such programs through the Training Coordinator.
c. As soon as is practical, the employee will take part in a training session to address the noted deficiency.
d. Failure by the employee to correct the deficiency may result in disciplinary action.

5. It is important the Fayetteville Police Department maintain records of each training class it conducts, document employee participation and, at a minimum, record the following: [Calea 33.1.6]

a. Course content in the form of lesson plans provided by course instructors. [33.1.7 a]
b. Names of agency attendees. [33.1.7 b]
c. Performance of individual attendees as measured by tests, when administered. [33.1.7 c]

B. Police Training Academy

1. All officers of the Fayetteville Police Department must meet mandatory basic training requirements. The department will meet the following requirements that apply and will maintain a positive relationship with the state's training academies: [Calea 33.2.3]

a. As required by Arkansas Statute 12-9-106, the Fayetteville Police Department will utilize state approved law enforcement training academies for the purpose of providing basic training to all officers.
b. The Training Coordinator, in a liaison role, is responsible for maintaining a positive working relationship with the staff of the state's law enforcement training academies.
c. As set forth in Arkansas Statue 12-9-107, the Training Coordinator will provide input to the Arkansas Commission on Law Enforcement Standards and Training (CLEST) regarding the academies' curriculum.
d. As prescribe in Arkansas Statute 12-9-107, the expenses of attending the basic training at state academies shall be furnished by the state. The department will be responsible for officers' salary and travel related to attending the state academy.
e. Newly hired officers are considered full-time employees of the City of Fayetteville and shall retain all the benefits thereof.

2. Newly hired officers will participate in departmental orientation period overseen by the Training Coordinator in addition to academy requirements to include: [Calea 33.2.4]

a. An overview of the operations of the Fayetteville Police Department, an introduction to the local criminal justice system, defensive tactics and an introduction to firearm safety and proficiency.
b. A portion of the orientation will be dedicated to the study of the Fayetteville Police Department's Policies, Procedures and Rules with special emphasis to the policies concerning Use of Force, Pursuit Driving, Office of Professional Standards, Harassment in the Workplace and Racial Profiling Prohibited.

C. Training Implementation

1. Personnel assigned to the training function as instructors must be certified by the State of Arkansas and must receive training to include: [Calea 33.3.1]

a. Lesson plan development
b. Performance objective development
c. Instructional techniques
d. Testing and evaluation techniques
e. Resource availability and use.

2. All officers of the Fayetteville Police Department will complete a training program prior to assignment in any capacity in which the officer is allowed to carry a weapon or is in a position to make an arrest, except as part of the Field Training Officer (FTO) program. [33.4.1]

a. The FTO program curriculum is an ever-changing curriculum based on tasks of the most frequent assignment-associated duties of the officers. [Calea 33.4.2 a]
b. The Training Coordinator operates the FTO program and provides supervision of officers in training and the Field Training Officers. [Calea 33.4.3 c]
c. Each officer must meet achievement standards in the FTO program that are documented in the FTO manual and measure competency in required skills, knowledge and abilities. [Calea 33.4.2 b]

d In addition to academy training, officers of the department must successfully complete a formal FTO program lasting a minimum of twelve weeks. Officers with prior law enforcement experience may complete the FTO program in fewer than twelve weeks, as determined by their level of competency and approved by the Chief of Police. [Calea 33.4.3 a]

e. While in the FTO program, officers will be scheduled in a rotation of shift assignments in order to provide them with various job experiences. [Calea 33.4.3 f]

3. Selection criteria and duties of Field Training Officers of the Fayetteville Police Department:

a. Candidates for Field Training Officer must have a minimum experience level of three years with the Fayetteville Police Department.

b. Field Training Officer candidates are selected based on leadership qualities demonstrated in the field and must satisfactorily complete a forty-hour course in Field Training and become certified by CLEST. [Calea 33.4.3 b, e]

c. Field Training Officers will follow the guidelines of the FTO Training Manual and supervision of the Training Coordinator when training an officer. [Calea 33.4.3 g]

d. Field Training Officers are responsible for documentation of the officer's progress and deficiencies and will work with other Field Training Officers in formal reporting to the Training Coordinator. [Calea 33.4.3 h]

4. Officers of the Fayetteville Police Department will be required to complete annual retraining through the following: [Calea 33.5.1]

a. Annual retraining mandated by the State of Arkansas as coordinated through the training division.

b. Departmental Policy updates provided by Administration and through each employee's supervisor.

c. Legal updates on changes with emphasis on those changes that most affect law enforcement operations.

5. Shift Briefings have been a valuable and steady tool for the department to supplement the training function on a formal and informal basis: [Calea 33.5.2]

a. The Training Coordinator will be responsible for the supervision of all materials developed, produced and distributed during formal shift briefing training sessions.

b. All lesson plans for formal shift briefing training sessions must be implemented and scheduled through the Training Coordinator.

c. The Training Coordinator will maintain a record and copy of all formal shift briefing training session materials and lesson plans.

d. Any person or division providing formal shift briefing training sessions will be required to document attendees and, in turn, provide such documentation to the Training Coordinator and CLEST.

e. Informal shift briefings training sessions may be utilized as a means to offer refresher training. These sessions do not require the documentation described above and may be authorized as a shift supervisor deems necessary.

6. When applicable, the departments' Accreditation Manager(s) will ensure agency personnel shall receive information regarding the accreditation process: [Calea 33.5.3]

a. To all newly hired personnel within thirty days after beginning employment or within thirty days after completing the training academy.
b. To all agency personnel during the self-assessment phase associated with achieving initial accreditation.
c. To all agency personnel prior to an on-site assessment.
d. These requirements may be achieved through the process of the Training Coordinator, the FTO Program, classroom instruction and orientation, via e-mail or memorandum.
e. Agency employees assigned to the position of Accreditation Manager shall receive formal training within one year of being appointed. [Calea 33.5.4]

7. Officers of the Fayetteville Police Department must meet specialized training requirement by position: [Calea 33.6.1]

a. Non-ranking officer assigned to specialized divisions other than patrol will be provided on-the-job training as overseen by that division's supervisor. In addition, training courses for this level of personnel will be identified by the supervisor and coordinated through the Training Coordinator.
b. Officers assigned to Motorcycle and Bicycle Patrol must successfully complete departmentally approved training prior to assignment in either capacity.
c. Officers assigned to the department's Emergency Response Team (ERT) must meet the specified requirements and training as outlined in Fayetteville Police Department Policy 46.2.1. [Calea 33.6.2]
d. Officers assigned to the department's Crises Negotiation Team will train periodically and will be overseen by the team's respective supervisor.

8. Civilian employees of the Fayetteville Police Department must meet the following requirements related to training:

a. Civilian employees must receive information regarding the agency's role, purpose, goals, policies and procedures. [Calea 33.7.1 a]
b. Civilian employees will receive information pertaining to working conditions, regulations, responsibilities and rights of employees. [Calea 33.7.1 b, c]
c. Civilian employees assigned to the Communications Division must successfully complete a comprehensive training program including lesson plans, examinations and exercises as well as attend ongoing monthly in-service training and seminars. [Calea 33.7.2]
d. Civilian employees assigned to the Records Division will be provided in-service training to include the issuance of a task specific training manual. [Calea 33.7.2]

9. The Career Development function of the Fayetteville Police Department shall be a central part of training and implemented using the following guidelines:

a. All newly promoted personnel will receive job related training commensurate with their new duties within the first year following promotion. [Calea 33.8.2]
b. The department's career development program will further be strengthened and enhanced by formal training under the direction of the Training Coordinator as well as formal educational opportunities through the City of Fayetteville Education Reimbursement Policy when in effect. [Calea 33.8.3]

POLICIES, PROCEDURES, AND RULES

Subject: 41.2.7 Department Response to Mentally Ill Subjects	**Effective Date:**
Reference:	Version: 1
CALEA: 41.2.7	No. Pages: 5

I. PURPOSE

The purpose of this policy is to provide officers with effective resources for persons in need of mental health service and to provide information on legal and procedural requirements to assist them in providing the highest possible degree of service to this community.

It is the practice of the Fayetteville Police Department to protect emotionally disturbed persons from harming themselves or others. Officers are likely to encounter mentally ill subjects in the course of their daily activity. It is important to understand that mentally ill subjects may require more time, different communication strategies and unusual decision-making in order to effectively address the issues at hand. Effective strategies for dealing with this population must place priority on public safety, the needs of the community and the requirements and rights of the individual [Calea 41.2.7].

II. POLICY

Officers will make every effort to deal with subjects believed to be mentally ill in a manner that will provide maximum safety to themselves, the community, and the subject. When possible, an officer should have another officer present at all times when dealing with subjects believed to be mentally ill. Officers will take steps to ensure such persons receive appropriate treatment to the extent possible.

A. Recognizing Mental Illness

1. Mental Illness: Arkansas § 20-47-202 (10) (A) defines "mental illness" as a substantial impairment of emotional processes, or of the ability to exercise conscious control of one's actions, or the ability to perceive reality or to reason, when the impairment is manifested by instances of extremely abnormal behavior or extremely faulty perceptions.
2. Officers' decisions to hospitalize or deal with a mentally ill person informally should be based on the degree of symptoms being displayed. The warnings signs or symptoms may include, but should not be limited to, the following [Calea 41.2.7 a.]:

    a. Confused thinking
    b. Prolonged depression, including sadness or irritability
    c. Feelings of extreme highs and lows
    d. Paranoia, excessive fears, worries, and anxieties

e. Dramatic changes in sleeping or eating habits
f. Strong feelings of anger
g. Delusions or hallucinations
h. Suicidal thoughts
i. Denial of obvious problems
j. Numerous unexplained physical ailments
k. Substance abuse
l. Social withdrawal
m. Threatening behavior

B. Initial Contact Guidelines [Calea 41.2.7 c]

1. Initial Contact – Any person exhibiting signs of uncontrolled mental illness may be experiencing the effects of a severe medical condition, a chemical imbalance, brain damage, the effects of narcotic use or a combination of any/all of the above.

   a. Officers should not attempt to diagnose symptoms. Officers may be called upon to articulate any observations and to make sound decisions based on those observations.
   b. Officers will always remember that any person, including a mentally ill person, can be dangerous. Additionally, violent mentally ill subjects may not respond in a predictable manner when physical force is being used. They may not respond to painful stimuli as others would, and they may be unusually strong during an acute psychotic phase.

2. Gathering Facts — Gather information that will assist in making decisions and that may be used in a criminal or civil proceeding at some point.

   a. Information may come from the subject, friends, family, and witnesses.
   b. Valuable information may also be found when reviewing prescription medications or in conferring with the person's psychiatric staff.

3 Officer's Evaluation of Subject – When an officer encounters a person whom he believes may need mental health care, the officer shall evaluate the person's condition and determine an appropriate disposition of the person, in accordance with Arkansas § 20-47-204, Arkansas § 20-47-207, and Arkansas § 20-47-210. Officers must first decide if, in their judgment based on training, experience and input from mental health professionals and/or family members of the subject, that the person is mentally ill AND:

   a. A danger to him/herself and/or
   b. A danger to others and/or
   c. Gravely disabled (to the point that they can no longer take care of basic functions such as secure shelter, medicine, food or basic hygiene)

4. **Unless the Subject willingly agrees to go to a treatment facility, and the above criteria are met, a custodial detention is required on the part of this department.**

    a. Custody can either take the form of a physical arrest or protective custody. In the event of arrest, Officers shall complete a charging instrument (preliminary arrest form) with a listed violation of a state statute.
    b. Officers SHALL NOT take a person into protective custody and place them in a jail setting without a chargeable offense.

5. Person believed to be suffering from mental illness that do not pose an immediate danger to themselves or others may receive the following services from this department:

    a. Transportation or direction to a local treatment facility for voluntary admission.
    b. Assistance in contacting supportive family, friends and/or care providers.

6. Transportation – Patrol units equipped with safety screens will be used to transport persons to treatment facilities. Officers should refer to Fayetteville Police Department Policy 71.1.1 for transportation guidelines.

C. Involuntary Commitment

1. Arkansas § 20-47-207 states that a person shall be eligible for involuntary commitment if he or she is in such a mental condition as a result of mental illness, disease, or disorder that he/she poses a clear and present danger to himself/herself or others.
2. State law requires any person placing a protective hold on another person to take that subject to a hospital or receiving facility for treatment (ACA 20-47-201—210).
3. Involuntary Commitment: If an officer has personally witnessed a person's behavior, which meets the criteria for involuntary commitment; received information from an interested citizen willing to seek a petition for involuntary admission; or upon the authorization of a Supervisor, the officer shall:

    a. Take the person into custody. This can either be through arrest if an actual crime has been committed or through protective custody as detailed in Arkansas § 20-47-210.
    b. Transport the person to Washington County Jail or to the appropriate facility for screening and evaluation.
    c. Provide jail staff or the initial screener with as much information as possible about the person's condition.
    d. Stay with the person until jail staff or hospital/treatment facility security arrives and a report is given to receiving personnel. (Officers may use their discretion to stay in the hospital facility longer in cases when the subject is still violent and difficult to control.)
    e. Complete a charging instrument (preliminary arrest form) if an arrest has been made.

f. Complete a petition for involuntary commitment and attach to an informational report. **(The petitioning officer must sign the affidavit.)**

g. Leave a copy of the petition and informational report in the CID mailbox. CID personnel will be responsible for forwarding the reports to the Washington County Prosecutor's Office.

4. Current hospital and treatment center protocol will be maintained and available in the Lieutenant's Office. [Calea 41.2.7 b.]
5. Note: If an officer has not witnessed behavior that would allow him/her to articulate under oath the need for involuntary commitment, but other adults have witnessed the behavior, those witnesses should be encouraged to file a petition for involuntary commitment with the Washington County Prosecutor's Office.
6. Officers may use a reasonable and appropriate level of physical force necessary to control and transport persons for the purpose of involuntary commitment or for the enforcement of a court order, in compliance with Fayetteville Police Department Policy 1.3.1.

D. Felony Arrest

1. No petition for Involuntary Commitment is necessary in the case of a felony arrest.
2. Felony arrests may result in a court order requiring immediate confinement of a mentally ill subject into the Act 911 Program.
3. In instances where crimes have been committed, particularly against other persons, an arrest is the preferred method of action:

E. Interview and Interrogation [Calea 41.2.7 c]

1. Persons who are presently experiencing mental illness may be interviewed and/or interrogated in reference to an investigation.
2. Officer Safety must remain of paramount importance, and having a second officer observing the interview is preferable.

F. Training

1. The Training Division shall ensure that all sworn employees receive documented entry-level and refresher training on applicable laws and handling persons suspected to be mentally ill. [Calea 41.2.7 d]
2. This documented training should occur at least every three (3) years and should include input/instructors from mental health professionals, mental health consumers and law enforcement instructors. [Calea 41.2.7 e]

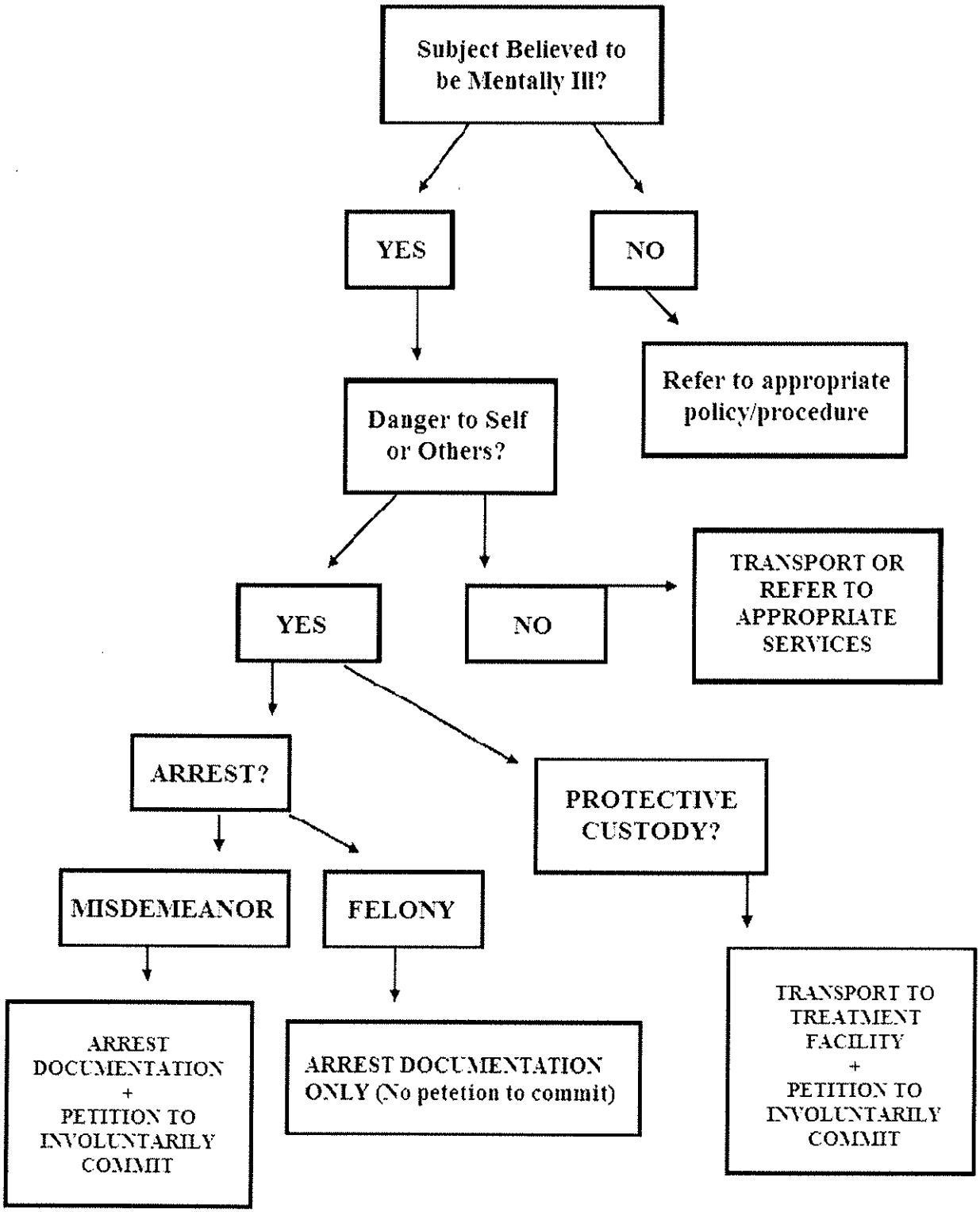
Subject Believed to be Mentally Ill?
YES
NO
Refer to appropriate policy/procedure
Danger to Self or Others?
YES
NO
TRANSPORT OR REFER TO APPROPRIATE SERVICES
ARREST?
PROTECTIVE CUSTODY?
MISDEMEANOR
FELONY
ARREST DOCUMENTATION + PETITION TO INVOLUNTARILY COMMIT
ARREST DOCUMENTATION ONLY (No petetion to commit)
TRANSPORT TO TREATMENT FACILITY + PETITION TO INVOLUNTARILY COMMIT

FAYETTEVILLE POLICE DEPARTMENT
FAYETTEVILLE, ARKANSAS

POLICIES, PROCEDURES, AND RULES

Subject: 44.2.4 School Resource Officer	**Effective Date:**
Reference:	Version: 1
CALEA: 44.2.4	No. Pages: 3

I. Purpose

The Fayetteville Police Department, working together with the Fayetteville Public Schools, will establish and operate a school-based policing program with the general purpose of reducing the incidence and severity of juvenile crime and delinquency, and protecting students, faculty and staff on school property.

Placing officers within the schools as a police-school liaison is an effective way to detect early tendencies toward delinquency and provide a positive influence among young people. This preventative philosophy will involve a continuous and broad range of contact between the School Resource Officer (SRO) and youth in an educational environment. [Calea 44.2.4]

II. Policy

A. Program Management

1. Organizationally, the SRO Division is located with the Community Oriented Policing Division and its supervisor. A cooperative agreement between the Fayetteville Public School District will be established to provide for placement of a full-time officer(s) within a designated public school.
2. School Resource Officers are police officers first, employed by this department and are responsible for carrying out all duties and responsibilities as a police officer.
3. Although a School Resource Officer may participate in school activities involving counseling and education, they are not school disciplinarians and will not assume this role.
4. School Resource Officers will not involve themselves or the department in administrative personnel matters of the Fayetteville Public School that are not criminal offenses.
5. School Resource Officers report directly to the sergeant of the Community Oriented Policing Division concerning all matters related to the SRO Division.
6. On days that are considered off-days for the school and normal workdays for the department, the School Resource Officer will report to his/her immediate supervisor.
7. School Resource Officers will follow department policies and procedures as police officers.
8. School Resource Officers will be assigned to patrol duties or other assignments as determined by the Chief of Police during school breaks.

B. Selection

1. When a position becomes open in the SRO Program, requests for the assignment will be posted. Officers seeking the assignment must obtain a referral memorandum from his/her supervisor. The selection process will include an oral interview and may include a review of the officer's performance evaluation or supervisory assessment.
2. Officers selected for assignment to the SRO Program will be specially trained in areas of juvenile law and crime prevention, community policing, education and counseling.

C. Responsibilities – Responsibilities for the School Resource Officer will include, but are not limited to the following:

1. Enforce the law and assist as needed in school disciplinary matters;
2. Take appropriate investigative action in instances when laws are violated;
3. Coordinate enforcement activities with the Principal and staff;
4. Present law enforcement related education curriculum to students;
5. Make himself/herself available for conferences with students, parents and faculty to assist with law enforcement or crime prevention problems;
6. Be familiar with all community agencies that provide health and social services;
7. Act as a resource person to students, families and faculty making referrals to school officials when appropriate;
8. Serve as a liaison with the police department regarding community affairs that may affect the school environment;
9. Serve as the school-based contact for students who are on probation through the court system;
10. Take actions against intruders who appear at school and related functions;
11. Give assistance to other police officers in matters regarding his/her assignment;
12. Consult with the Principal to request additional police assistance or private security when necessary;
13. Assist in enforcing school rules, including monitoring student movements in the halls, checking student passes, parking permits, etc.;
14. Attend faculty, parent and community meetings to solicit support for an understanding of the SRO Program;
15. Participate in the development of plans and strategies to prevent and/or minimize dangerous situations on school property;
16. Conduct formal interviews with students while adhering to police and school interview policies;
17. Attend after-hour school functions in a law enforcement and/or liaison capacity, and;
18. Perform other duties appropriate to his/her role as the School Resource Officer.

D. SRO Operations - The SRO Program operating goals are adapted from the National Association of School Resource Officers. The School Resource Officer is not only a law enforcement officer but also a teacher and counselor. As such, the following operations may be achieved through classroom instruction, private consultation or law enforcement action:

1. Encourage friendly contact between the police, children and youth in the school environment.
2. Provide support and assistance to students experiencing stress and crises at school.
3. Provide education on law enforcement and the criminal justice system.
4. Protect children from crime or other harmful influences while at school.

City of Fayetteville Staff Review Form

City Council Agenda Items
and
Contracts, Leases or Agreements

6/15/2010
City Council Meeting Date
Agenda Items Only

Andrew Garner	Planning	Development Services
Submitted By	**Division**	**Department**

Action Required:

RZN 10-3566: (932 Garland, 444): Submitted by Kelly Ellis for property located at 932 Garland Avenue. The property is zoned R-PZD, Residential Planned Zoning District 06-2256 (932 Garland), and contains approximately 0.84 acres. The request is to rezone the subject property to R-O, Residential Office and RMF-40, Residential Multi-Family, 40 units per acre.

Cost of this request	$ - Category / Project Budget	Program Category / Project Name
Account Number	$ - Funds Used to Date	Program / Project Category Name
Project Number	$ - Remaining Balance	Fund Name

Budgeted Item ☐ **Budget Adjustment Attached** ☐

Department Director — 05.27.2010 Date

City Attorney — May 27-2010 Date

Finance and Internal Services Director — 5.27.2010 Date

Chief of Staff — 5-28-10 Date

Mayor — 6/1/10 Date

Previous Ordinance or Resolution # _____

Original Contract Date: _____

Original Contract Number: _____

Received in City Clerk's Office — ENTERED 5/27/10 Kim

Received in Mayor's Office — ENTERED 5/27/10

Comments:

Revised January 15, 2009

Left on the Second Reading at the 6-15-10 CC mtg.

Fayetteville
ARKANSAS
www.accessfayetteville.org

THE CITY OF FAYETTEVILLE, ARKANSAS
DEPARTMENT CORRESPONDENCE

CITY COUNCIL AGENDA MEMO

To: Mayor and City Council

Thru: Jeremy Pate, Development Services Director

From: Andrew Garner, Senior Planner

Date: May 26, 2010

Subject: RZN 10-3566 (932 North Garland)

RECOMMENDATION

Staff and the Planning Commission recommend approval of rezoning the subject property from R-PZD 06-2256 (932 Garland) to R-0, Residential Office and RMF-40, Residential Multi-Family 40 Units Per Acre.

BACKGROUND

The subject property is located on the east side of Garland Avenue, between Berry and Hughes Street. The property contains several parcels totaling approximately 0.84 acres that is currently developed with an office and single family homes. The property is bounded by Hughes Street to the north, Berry Street to the south, Garland Avenue to the west, and a 20-foot public alley to the east. The property was previously zoned R-O, Residential Office and RMF-40, Residential Multi-Family 40 Units per Acre. On December 5, 2006 the City Council approved a request to rezone the property to its current zoning, R-PZD 06-2256 (932 Garland). The PZD zoning district allowed 37 dwelling units and 22,854 square feet of non-residential use.

The R-PZD was never developed and the approval expired one year from its original approval. With the expiration of the R-PZD, development or subdivision of the property is not permitted unless the R-PZD is revoked and/or the zoning is changed. The applicant requests to return the property to the zoning that was in place prior to the R-PZD.

DISCUSSION

This item was heard at the regular Planning Commission meeting on May 24, 2010. The Planning Commission voted 7-0-0 to forward this rezoning request to the City Council with a recommendation for approval.

BUDGET IMPACT

None.

ORDINANCE NO.

AN ORDINANCE REZONING THAT PROPERTY DESCRIBED IN REZONING PETITION RZN 10-3566, FOR APPROXIMATELY 0.84 ACRES, LOCATED AT 932 GARLAND AVENUE FROM R-PZD, RESIDENTIAL PLANNED ZONING DISTRICT 06-2256 (932 GARLAND), TO R-O, RESIDENTIAL OFFICE AND RMF-40, RESIDENTIAL MULTI-FAMILY, 40 UNITS PER ACRE

BE IT ORDAINED BY THE CITY COUNCIL OF THE CITY OF FAYETTEVILLE, ARKANSAS:

Section 1: That the zone classification of the following described property is hereby changed as follows:

From R-PZD, Residential Planned Zoning District 06-2256 (932 Garland) to R-O, Residential Office and RMF-40, Residential Multi-Family, 40 units per acre, as shown on Exhibits "A" and "B" attached hereto and made a part hereof.

Section 2: That the official zoning map of the City of Fayetteville, Arkansas is hereby amended to reflect the zoning change provided in Section 1 above.

PASSED and **APPROVED** this day of , 2010.

APPROVED: ATTEST:

By: _____ By: _____

LIONELD JORDAN, Mayor **SONDRA E. SMITH**, City Clerk/Treasurer

EXHIBIT "A"

RZN10-3566

Close Up View

932 GARLAND

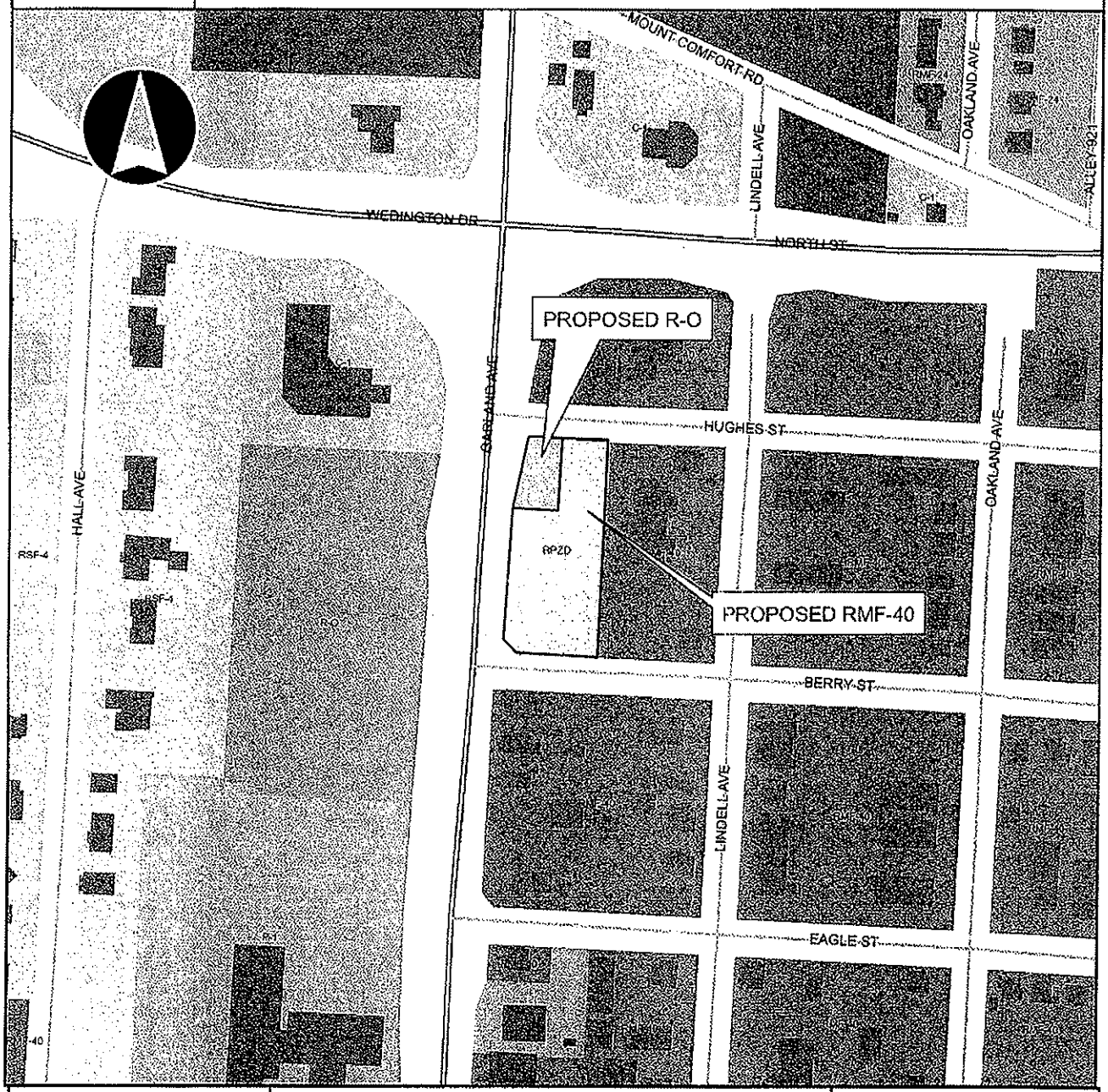

Overview

0 75 150 300 450 600 Feet

EXHIBIT "B"
RZN 10-3566

TO BE REZONED R-O, RESIDENTIAL OFFICE:

SURVEY DESCRIPTION 932 N. GARLAND AVENUES
A PART OF LOTS NUMBERED ELEVEN (11), AND TWELVE (12), ALL IN BLOCK NUMBERED FIVE (5) OF ROSE HILL ADDITION, AN ADDITION TO THE CITY OF FAYETTEVILLE, ARKANSAS, AS PER PLAT OF SAID ADDITION ON FILE IN THE OFFICE OF THE CIRCUIT CLERK AND EX-OFFICIO RECORDER OF WASHINGTON COUNTY, ARKANSAS, AND BEING MORE PARTICULARLY DESCRIBED AS FOLLOWS: COMMENCING AT THE SOUTHEAST CORNER OF SAID LOT ELEVEN (11), SAID POINT BEING AN EXISTING IRON REBAR; THENCE N86°45'34"E 63.71 FEET ALONG THE SOUTH LINE OF SAID LOT ELEVEN (11) TO THE TRUE POINT OF BEGINNING; THENCE N86°45'34"W 61.32 FEET ALONG THE SOUTH LINE OF SAID LOT ELEVEN (11) TO AN EXISTING 1/2" IRON REBAR ON THE EAST RIGHT-OF-WAY LINE OF ARKANSAS HIGHWAY #112 (GARLAND AVENUE) AS RELOCATED BY THE ARKANSAS HIGHWAY COMMISSION; THENCE N12°43'57"E 101.05 FEET TO AN EXISTING IRON REBAR ON THE NORTH LINE OF SAID LOT TWELVE (12); THENCE LEAVING SAID RIGHT-OF-WAY LINE S86°43'23"E 44.72 FEET ALONG THE NORTH LINE OF SAID LOT TWELVE (12) TO A POINT; THENCE S03°16'37"W 99.64 FEET TO THE POINT OF BEGINNING.

TO BE REZONED RMF-40, RESIDENTIAL MULTI-FAMILY, 40 UNITS PER ACRE:

SURVEY DESCRIPTION HUGHES STREET
A PART OF LOTS NUMBERED ELEVEN (11), AND TWELVE (12), ALL IN BLOCK NUMBERED FIVE (5) OF ROSE HILL ADDITION, AN ADDITION TO THE CITY OF FAYETTEVILLE, ARKANSAS, AS PER PLAT OF SAID ADDITION ON FILE IN THE OFFICE OF THE CIRCUIT CLERK AND EX-OFFICIO RECORDER OF WASHINGTON COUNTY, ARKANSAS, AND BEING MORE PARTICULARLY DESCRIBED AS FOLLOWS: BEGINNING AT THE SOUTHEAST CORNER OF SAID LOT ELEVEN (11), SAID POINT BEING AN EXISTING IRON REBAR; THENCE N86°45'34"E 63.71 FEET ALONG THE SOUTH LINE OF SAID LOT ELEVEN (11) TO A POINT; THENCE N03°16'37"E 99.64 FEET TO A POINT ON THE NORTH LINE OF SAID LOT TWELVE (12); THENCE S86°43'23"E 62.36 FEET TO AN EXISTING IRON AT THE NORTHEAST CORNER OF SAID LOT TWELVE (12); THENCE S02°30'00"W 99.61 FEET TO THE POINT OF BEGINNING.

&

SURVEY DESCRIPTION REMAINDER
A PART OF LOTS NUMBERED SEVEN (7), EIGHT (8), NINE (9), TEN (10) ALL IN BLOCK NUMBERED FIVE (5) OF ROSE HILL ADDITION, AN ADDITION TO THE CITY OF FAYETTEVILLE, ARKANSAS, AS PER PLAT OF SAID ADDITION ON FILE IN THE OFFICE OF THE CIRCUIT CLERK AND EX-OFFICIO RECORDER OF WASHINGTON COUNTY, ARKANSAS, AND BEING MORE PARTICULARLY DESCRIBED AS FOLLOWS: BEGINNING AT THE SOUTHEAST CORNER OF SAID LOT SEVEN (7), SAID POINT BEING AND EXISTING IRON REBAR; THENCE N86°50'55"W 109.61 FEET ALONG THE SOUTH LINE OF SAID LOT SEVEN (70) TO AN EXISTING 1/2" IRON REBAR ON THE EAST RIGHT-OF-WAY LINE OF ARKANSAS HIGHWAY #112 (GARLAND AVENUE) AS RELOCATED BY THE ARKANSAS HIGHWAY COMMISSION; THENCE N44°02'02"W ALONG SAID RIGHT-OF-WAY LINE 26.93

FEET TO AN EXISTING 1/2" IRON REBAR; THENCE N03°48'11"E ALONG SAID RIGHT-OF-WAY LINE 181.10 FEET TO AN EXISTING IRON REBAR; THENCE LEAVING SAID RIGHT-OF-WAY LINE S86°45'34"E 125.03 FEET TO AN EXISTING IRON REBAR AT THE NORTHEAST CORNER OF SAID LOT TEN (10); THENCE S02°30'00"W 199.21 FEET TO THE POINT OF BEGINNING.

Fayetteville
ARKANSAS

PC Meeting of May 24, 2010

THE CITY OF FAYETTEVILLE, ARKANSAS

125 W. Mountain St.
Fayetteville, AR 72701
Telephone: (479) 575-8267

PLANNING DIVISION CORRESPONDENCE

TO:	Fayetteville Planning Commission
FROM:	Andrew Garner, Senior Planner
	Matt Casey, Assistant City Engineer
THRU:	Jeremy Pate, Development Services Director
DATE:	~~May 20, 2010~~ *Updated May 26, 2010*

RZN 10-3566: (932 GARLAND / JORDAN HOLDINGS, 444): Submitted by KELLY ELLIS for property located at 932 GARLAND AVENUE. The property is zoned R-PZD, RESIDENTIAL PLANNED ZONING DISTRICT 932 GARLAND, and contains approximately 0.84 acres. The request is to rezone the subject property from R-PZD, Residential-Planned Zoning District to R-O, Residential Office and RMF-40, Residential Multi-Family, 40 Units per Acre.

Planner: Andrew Garner

BACKGROUND:

Property description and background: The subject property is located at 932 Garland Avenue, between Berry and Hughes Street. The property contains several parcels totaling approximately 0.84 acres that is currently developed with an office and single family homes. The property is bounded by Hughes Street to the north, Berry Street to the south, Garland Avenue to the west, and a 20-foot public alley to the east. The property was previously zoned R-O, Residential Office and RMF-40, Residential Multi-Family 40 Units per Acre. On December 5, 2006 the City Council approved a request to rezone the property to its current zoning, R-PZD 06-2256 (932 Garland). The PZD zoning district allowed 37 dwelling units and 22,854 square feet of non-residential use.

The R-PZD was never developed and the approval expired one year from its original approval. With the expiration of the R-PZD, development or subdivision of the property is not permitted unless the R-PZD is revoked and/or the zoning is changed.

SURROUNDING LAND USE AND ZONING:

Direction	Land Use	Zoning
North	Commercial strip center	C-2
South	Residential	RMF-40
East	Residential	RMF-40
West	Undeveloped	R-O

Proposal: The applicant proposes to repeal the R-PZD zoning and revert back to the zoning that was in place prior to the R-PZD, R-O and RMF-40. The R-O portion of the site would contain only the building at 932 Garland that is currently being used as an office, and the remainder of the property

would be zoned RMF-40. The process of revoking a PZD as an enforcement action is an option for this property. However, the applicant has submitted a request to rezone the property back to the original zoning. This action would enable the applicant to utilize and develop the property under the standards in place today.

INFRASTRUCTURE:

Streets: The site has access to Garland Avenue, Hughes Street, and Berry Street. Garland Avenue is a four lane state highway in this location. Hughes Street is an unimproved two lane paved city street in this location. Berry Street is an improved two lane paved city street in this location. Street improvements will be evaluated with development.

Water: Water is available to the property. There is a 12" public main located across Garland Avenue and a 2" main located on Berry Street. Public water main improvements may need to be constructed to provide domestic and fire flow for any proposed development.

Sewer: Sanitary sewer is available to the site. There is an 8" public main located along the west side of this property. The existing sanitary sewer may need to be analyzed to ensure that it has adequate capacity to serve a future development on this lot. Public mains may need to be extended through this property to serve any proposed development.

Fire: The subject property is located approximately a ¼ mile from Fire Station #2. Response time to the property is approximately 1.5 minutes. There should be no adverse effects on call volume.

Police: At the time of publication of this report not objections to this rezoning were provided by the Police Department.

RECOMMENDATION:

Staff recommends approval of the requested rezoning to R-O, Residential Office and RMF-40, Residential Multi-Family 40 Units per Acre based on the findings included as part of this report.

PLANNING COMMISSION ACTION:	**Required** **YES**
X Forward to City Council (recommend approval)	**☐ Denied**
Date: May 24, 2010	
Motion: Winston	
Second: Cabe	
Vote: 7-0-0	
CITY COUNCIL ACTION:	**Required** **YES**
	☐ Approved **☐ Denied**
Date: _____	

LAND USE PLAN: The Future Land Use Plan adopted as part of the City Plan 2025 designates this site **City Neighborhood Area**. Rezoning this property to R-O and RMF-40 would be consistent with this designation as these zonings would permit a mix of uses and high density residential development in the core of the City.

FINDINGS OF THE STAFF

1. A determination of the degree to which the proposed zoning is consistent with land use planning objectives, principles, and policies and with land use and zoning plans.

Finding: **The subject property is located just north of the University of Arkansas in a compact and dense core area of the City with a mix of surrounding uses. This area of the City has existing public services and infrastructure. The site is designated as a City Neighborhood Area on the future land use plan. Rezoning the property to R-O, Residential Office for the existing office at 932 Garland and RMF-40 for the remainder of the property would be consistent with land use planning objectives, principles, and policies and to encourage compact, complete development and infill and revitalization in the City's core. The proposed zonings are also consistent with surrounding multi-family and commercial zonings and future development on this site under the proposed zonings would be compatible with surrounding development patterns.**

2. A determination of whether the proposed zoning is justified and/or needed at the time the rezoning is proposed.

Finding: **A rezoning of the property is justified at this time. Due to the fact that the PZD has expired the property cannot be developed or subdivided. Revoking or rezoning the current PZD are the only options that allow further development on the property. Rezoning the property is needed in order to obtain a reasonable economic use of the property. The applicant is requesting that the**

site be rezoned to the zoning that was in place prior to the PZD. This is a reasonable and compatible request with the surrounding land uses and zoning.

3. A determination as to whether the proposed zoning would create or appreciably increase traffic danger and congestion.

Finding: **Based on staff findings the proposed rezoning would not create or appreciably increase traffic danger and congestion in the area. The property is located in a busy core area of the City and is located adjacent to Garland Avenue, a Principal Arterial Street, and is also served by Hughes and Berry Streets which are Local Streets. The existing R-PZD zoning would have permitted a 37-unit multi-family residential development along with approximately 27,000 square feet of non-residential use. The proposed zoning would revert the property back to the R-O and RMF-40 districts. This would result in development with similar average daily vehicle trips and demand on the surrounding street system as the existing R-PZD zoning and would not create adverse traffic impacts.**

4. A determination as to whether the proposed zoning would alter the population density and thereby undesirably increase the load on public services including schools, water, and sewer facilities.

Finding: **Based on the findings from public services providers, as outlined in the introduction section of this report, an undesirable increase in load on public services would not be created.**

5. If there are reasons why the proposed zoning should not be approved in view of considerations under b (1) through (4) above, a determination as to whether the proposed zoning is justified and/or necessitated by peculiar circumstances such as:

   a. It would be impractical to use the land for any of the uses permitted under its existing zoning classifications;

   b. There are extenuating circumstances which justify the rezoning even though there are reasons under b (1) through (4) above why the proposed zoning is not desirable.

Finding: **N/A**

161.15 District RMF-40, Residential Multi-Family – Forty Units Per Acre

(A) *Purpose.* The RMF-40 Multi-family Residential District is designated to protect existing high density multi-family development and to encourage additional development of this type where it is desirable.

(B) *Uses.*

(1) *Permitted uses.*

Unit 1	City-wide uses by right
Unit 8	Single-family dwellings
Unit 9	Two-family dwellings
Unit 10	Three-family dwellings
Unit 26	Multi-family dwellings

(2) *Conditional uses.*

Unit 2	City-wide uses by CUP
Unit 3	Public protection and utility facilities
Unit 4	Cultural and recreational facilities
Unit 5	Government facilities
Unit 11	Manufactured home park
Unit 12	Limited business
Unit 24	Home occupation
Unit 25	Professional offices
Unit 36	Wireless communications facilities

(C) *Density.*

Units per acre	40 or less

(D) *Bulk and area regulations.*

(1) *Lot width minimum.*

Manufactured home park	100 ft.
Lot within a manufactured home park	50 ft.
Single-family	60 ft.
Two-family	60 ft.
Three or more	90 ft.
Professional offices	100 ft.

(2) *Lot area minimum.*

Manufactured home park	3 acres
Lot within a manufactured home park	4,200 sq. ft.
Townhouses: Development Individual lot	 10,000 sq. ft. 2,500 sq. ft.
Single-family	6,000 sq. ft.
Two-family	6,500 sq. ft.
Three or more	8,000 sq. ft.
Fraternity or Sorority	1 acre

(3) *Land area per dwelling unit.*

Manufactured home park	3,000 sq. ft.
Townhouses & Apartments No bedroom One bedroom Two or more bedrooms	 1,000 sq. ft 1,000 sq. ft. 1,200 sq. ft.
Fraternity or Sorority	500 sq. ft. per resident

(E) *Setback requirements.*

Front	Side	Rear
The principal façade of a building shall be built within a build-to zone that is located between 10 feet and a line 25 feet from the front property line.	8 ft.	20 ft.

Cross reference(s)--Variance, Ch. 156.

(F) *Building height regulations.*

Building Height Maximum	60 ft.

Height regulations. Any building which exceeds the height of 20 feet shall be set back from any side boundary line of an adjacent single family district, an additional distance of one foot for each foot of height in excess of 20 feet.

(G) *Building area.* None.

(H) *Minimum buildable street frontage.* 50% of the lot width.

(Code 1965, App. A., Art. 5(IV); Ord. No. 2320, 4-5-77; Ord. No. 2700, 2-2-81; Ord. No. 1747, 6-29-70; Code 1991, §160.034; Ord. No. 4100, §2 (Ex. A), 6-16-98; Ord. No. 4178, 8-31-99; Ord. 5028, 6-19-07; Ord. 5224, 3-3-09; Ord. 5262, 8-4-09; Ord. 5312, 4-20-10)

161.17 District R-O, Residential Office

(A) *Purpose.* The Residential-Office District is designed primarily to provide area for offices without limitation to the nature or size of the office, together with community facilities, restaurants and compatible residential uses.

(B) *Uses.*

(1) *Permitted uses.*

Unit 1	City-wide uses by right
Unit 5	Government facilities
Unit 8	Single-family dwellings
Unit 9	Two-family dwellings
Unit 12	Limited business
Unit 25	Offices, studios, and related services

(2) *Conditional uses.*

Unit 2	City-wide uses by conditional use permit
Unit 3	Public protection and utility facilities
Unit 4	Cultural and recreational facilities
Unit 11	Manufactured home park*
Unit 13	Eating places
Unit 15	Neighborhood shopping goods
Unit 24	Home occupations
Unit 26	Multi-family dwellings
Unit 36	Wireless communications facilities*
Unit 42	Clean technologies

(C) *Density.*

Units per acre	24 or less

(D) *Bulk and area regulations.*
(Per dwelling unit for residential structures)

(1) *Lot width minimum.*

Manufactured home park	100 ft.
Lot within a manufactured home park	50 ft.
Single-family	60 ft.
Two-family	60 ft.
Three or more	90 ft.

(2) *Lot area minimum.*

Manufactured home park	3 acres
Lot within a manufactured home park	4,200 sq. ft.
Townhouses: Development Individual lot	 10,000 sq. ft. 2,500 sq. ft.
Single-family	6,000 sq. ft.
Two-family	6,500 sq. ft.
Three or more	8,000 sq. ft.
Fraternity or Sorority	1 acre

(3) *Land area per dwelling unit.*

Manufactured home	3,000 sq. ft.
Townhouses & apartments: No bedroom One bedroom Two or more bedrooms	 1,000 sq. ft. 1,000 sq. ft. 1,200 sq. ft.
Fraternity or Sorority	500 sq. ft. per resident

(E) *Setback regulations.*

Front	**15 ft.**
Front, if parking is allowed between the right-of-way and the building	50 ft.
Front, in the Hillside Overlay District	15 ft.
Side	10 ft.
Side, when contiguous to a residential district	15 ft.
Side, in the Hillside Overlay District	8 ft
Rear, without easement or alley	25 ft.
Rear, from center line of public alley	10 ft.
Rear, in the Hillside Overlay District	15 ft.

(F) *Building height regulations.*

Building Height Maximum	60 ft.

Height regulations. Any building which exceeds the height of 20 feet shall be set back from any side boundary line of an adjacent single family district an additional distance of one foot for each foot of height in excess of 20 feet.

(G) *Building area.* On any lot, the area occupied by all buildings shall not exceed 60% of the total area of such lot.

(Code No. 1965, App. A., Art. 5(x); Ord. No. 2414, 2-7-78; Ord. No. 2603, 2-19-80; Ord. No. 2621, 4-1-80; Ord. No. 1747, 6-29-70; Code 1991, §160.041; Ord. No. 4100, §2 (Ex. A), 6-16-98; Ord. No. 4178, 8-31-99; Ord. 4726, 7-19-05; Ord. 4943, 11-07-06; Ord. 5079, 11-20-07; Ord. 5195, 11-6-08; Ord. 5224, 3-3-09; Ord. 5312, 4-20-10)

FIRE DEPARTMENT

From: Terry Lawson (City of Fayetteville Fire Marshall)
To: Slone, Amy
Date: 5/18/2010 10:05 AM
Subject: Re: zoning review tour

No objections.
TL

>>> Amy Slone 5/17/2010 11:30 AM >>>
Zoning Review Team:
See the requests below for one property requesting rezoning. Please review this item and respond to this email by the end of the day May 19, 2010. Let me or the individual planner assigned to the item know if you have any questions. A map indicating the project location is also attached.

Thank you,
Amy

RZN 10-3566: (932 GARLAND / JORDAN HOLDINGS, 444): Submitted by KELLY ELLIS for property located at 932 GARLAND AVENUE. The property is zoned R-PZD, RESIDENTIAL PLANNED ZONING DISTRICT 932 GARLAND, and contains approximately 0.84 acres. The request is to rezone the subject property from R-PZD, Residential-Planned Zoning District to R-O, Residential Office and RMF-24, Residential Multi-Family, 24 Units per Acre.
Planner: Andrew Garner

Amy Slone
Planning Technician
Development Services
City of Fayetteville

The U.S. Census takes place during March and April of this year. BE COUNTED! Your community is counting on you!

ENGINEERING DIVISION

RZN 10-3566: (932 GARLAND / JORDAN HOLDINGS, 444): Submitted by KELLY ELLIS for property located at 932 GARLAND AVENUE. The property is zoned R-PZD, RESIDENTIAL PLANNED ZONING DISTRICT 932 GARLAND, and contains approximately 0.84 acres. The request is to rezone the subject property from R-PZD, Residential-Planned Zoning District to R-O, Residential Office and RMF-24, Residential Multi-Family, 24 Units per Acre. Planner: Andrew Garner

Public water is available to the property. There is a 12" public main located across Garland Avenuea and a 2" main located on Berry Street. Public water main improvements may need to be constructed to provide domestic and fire flow for any proposed development.

Sanitary sewer is available to the site. There is an 8" public main located along the west side of this property. The existing sanitary sewer may need to be analyzed to ensure that it has adequate capacity to serve a future development on this lot. Public mains may need to be extended through the property to serve any proposed development.

The site has access to Garland Avenue, Hughes Street, and Berry Street. Garland Avenue is a four lane state highway in this location. Hughes Street is an unimproved two lane paved city street in this location. Berry Street is an improved two lane paved city street in this location. Street improvements will be evaluated with development submittal.

Standard improvements and requirements for drainage will be required for any development. This property is not affected by the 100-year floodplain.

TOPOGRAPHY SU

R INFORMATION
E #1
57.32
359.65
= 1359.63

E #2
99.93
392.28
= 1392.22

FORMATION

53.06
358.38
0.36
= 1350.31

71.67
367.87
= 1365.87

9.33
374.93
= 1374.88

4.38
379.93
= 1379.78

3.48
388.18
= 1388.13

4.04
389.94
0.74
= 1388.44

0.60
397.40
395.50

DISTANCE
26.93'

OF TRUSTEES

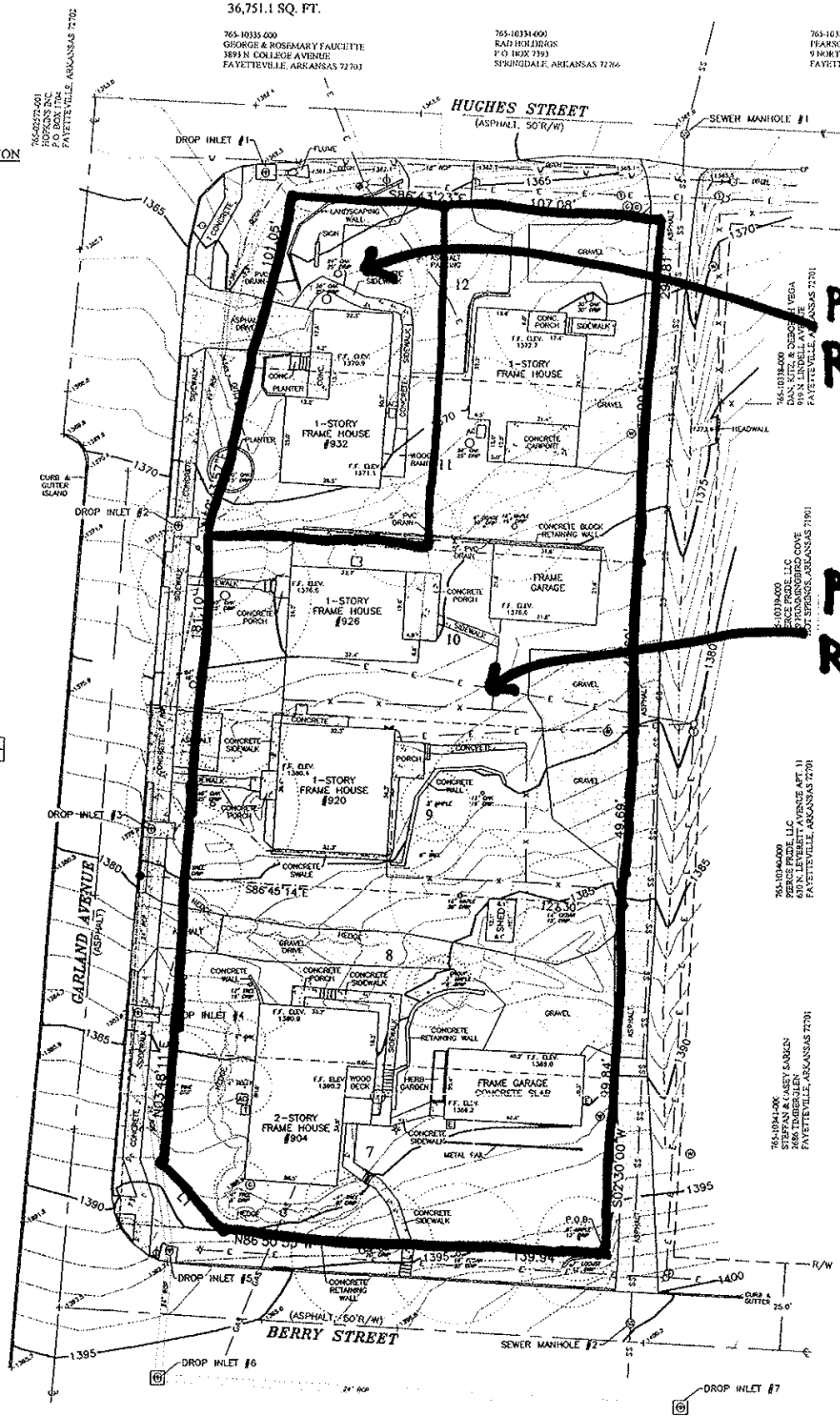

OWNER: MANSFIELD

ADDRESS: 904, 920,
FAYETTEVI
72701

BASIS OF BEARINGS:

BASIS OF ELEVATION:

REGIS
STA
ARKA
PROFESSION
G. ALA

April 14, 2010
For rezoning of property located at 932 N. Garland, Fayetteville, AR.

Rezoning Checklist:

Section 5:

a. Current owner of this property is Jordan Holdings, LLC, 400 Plaza Street, West Helena, AR 72390. Principle is Henry Jordan, Jr. Home Address is 87 Sologne, Little Rock, AR 72223. Phone: 501.821.6641 or 501.821.2529. Within this block, owner has property at 904 N. Garland listed with Kelly Ellis, Crye-Leike Realtors.
b. Reason for Rezoning request: Owner would like to sell 932 Garland as a separate property. Currently, this property has the same parcel number as an additional adjacent property at 1003 Hughes. According to Andrew Garner with the Planning Commission, the entire block needs to be rezoned from a PZD back to its previous zoning, which I believe was RMF24, then the property could be split.
c. There would be no change to land use, traffic, appearance, and signage, as the PZD was never implemented.
d. Availability of water and sewer – same as before, no changes to this entire block.
e. Degree to which it is consistent – reverting back, is consistent to what it had been previously.
f. Needed: Yes, this rezoning is needed, as the property at 932 Garland currently is under contract and the sale is contingent on this rezoning and the subsequent lot split that will occur.
g. Increased traffic danger: no effect
h. Alter population density – no effect
i. Why impractical under current zoning – PZD project never went forward, reverting to previous use and zoning.

ORDINANCE NO. 4955

AN ORDINANCE ESTABLISHING A RESIDENTIAL PLANNED ZONING DISTRICT TITLED R-PZD 06-2256, 932 GARLAND, LOCATED AT 932 GARLAND, BETWEEN BERRY AND HUGHES STREET, CONTAINING APPROXIMATELY 0.84 ACRES; AMENDING THE OFFICIAL ZONING MAP OF THE CITY OF FAYETTEVILLE; AND ADOPTING THE ASSOCIATED MASTER DEVELOPMENT PLAN.

BE IT ORDAINED BY THE CITY COUNCIL OF THE CITY OF FAYETTEVILLE, ARKANSAS:

Section 1: That the zone classification of the following described property is hereby changed as follows:

From RMF-40, Residential Multi-Family, 40 units per acre and R-O, Residential Office, to R-PZD 06-2256 as shown in Exhibit "A" and depicted in Exhibit "B" attached hereto and made a part hereof.

Section 2: That the change in zoning classification is based upon the approved master development plan, development standards, statement of commitments and the conditions of approval as submitted, determined appropriate and approved by the City Council indicated in Exhibit "C" attached hereto and made a part hereof.

Section 3: That this ordinance shall take effect and be in full force at such time as all of the requirements of the master development plan have been met.

Section 4: That the official zoning map of the City of Fayetteville, Arkansas, is hereby amended to reflect the zoning change provided in Section 1 above.

PASSED and **APPROVED** this 5th day of December, 2006.

APPROVED:

By: _____
DAN COODY, Mayor

ATTEST:

By: _____
SONDRA SMITH, City Clerk

CITY CLERK/TREASURER CITY OF FAYETTEVILLE ARKANSAS WASHINGTON COUNTY

PC Meeting of October 9, 2006

THE CITY OF FAYETTEVILLE, ARKANSAS

125 W. Mountain St.
Fayetteville, AR 72701
Telephone: (479) 575-8267

PLANNING DIVISION CORRESPONDENCE

TO: Fayetteville Planning Commission
FROM: Jesse Fulcher, Current Planner
Matt Casey, Assistant City Engineer
THRU: Jeremy Pate, Director of Current Planning
DATE: October 2, 2006

MDP R-PZD 06-2256: Residential Planned Zoning District (932 GARLAND): Submitted by ARCHITECTS 226, INC. for property located at 932 GARLAND, BETWEEN BERRY AND HUGHES STREET. The property is zoned RMF-40, MULTI FAMILY - 40 UNITS/ACRE and contains approximately 0.84 acres. The request is to review a Master Development Plan for a Residential Planned Zoning District with 37 dwelling units and 22,854 s.f. of commercial space.

Property Owner: MANSFIELD PROPERTY MANAGEMENT, LLC.
Planner: JESSE FULCHER

Findings:

Property Description: The property consists of several parcels totaling 0.84 acres that is currently developed with single-family homes within the RMF-40, Residential Multi-family zoning district. The property is bounded by Hughes Street to the north, Berry Street to the south, Garland Avenue to the west and a 20' public alley to the east. The property is currently zoned R-O and RMF-40.

Surrounding Land Use/Zoning:

Direction	Land Use	Zoning
North	Commercial strip center	C-2
South	Residential	RMF-40
East	Residential	RMF-40
West	Undeveloped	R-O

Proposal: The applicant requests a rezoning and Master Development Plan approval for a mixed-use project on the property within one (1) planning area. The proposal includes street-level retail/restaurant space along Garland Avenue and office space on the second level for a maximum of 22,854 square feet of non-residential space. A maximum of 37 residential condominiums, totaling 66,227 square feet will be provided above the non-residential floors. This results in a total density of 44.04 dwelling units per acre and an intensity of 27,207 SF of

nonresidential space per acre over the entire 0.84 acre site. The parking will be accommodated on-site in a two-level parking garage with access from both Hughes and Berry Streets.

To meet applicable zoning criteria, the proposed Planning Area has to have established bulk and area criteria, setbacks, height, etc. Otherwise the proposal would have to return to the City Council to address these zoning issues with development. The information is provided both in a booklet form, which describes the intent of the Planning Area along with a conceptual drawing, and by way of the larger plat, which gives much of the same technical information, along with the actual Master Development Plan. The building, street, and parking arrangement indicated on the master plan will likely vary somewhat from that which is presented. However, these issues can be resolved with the development review of the project and additional City Council action, if needed. At this step in the process it is important to make the policy decision of whether the zoning is appropriate and compatible to this area, given the proposed Master Development Plan, statement of commitments, and development standards.

Process: The purpose of the subject request is for a rezoning approval in order to secure entitlement for the property with a concept for a variety of uses and infrastructure improvements to support the community. Approval of the Master Development Plan Planned Zoning District would effectively rezone the property based on the conceptual plans and information provided in the booklets. However, it does not give development approval. The applicant is required to return through the large scale development process in order for the Planning Commission to confirm that the development plans presented are compliant with the zoning and Master Development Plans approved by the City Council.

Bulk and area criteria, while usually provided within the staff report, have been provided in duplicate by the applicant. The project booklet provided gives the zoning criteria in detail, as do the Master Development Plans. Please reference this provided material for more information. The booklet and plats presented are binding once approved, by ordinance.

Water & Sewer: Water and sewer lines are currently available in the area, and will be designed and constructed in accordance with city specifications to serve the development.

Access: Access to the site is provided from Garland Avenue, Berry Street, Hughes Street and a mid-block alley. No vehicular access is to be provided directly from Garland Avenue. Sidewalks will be improved in the area to provide pedestrian access.

Adjacent Master Street Plan Streets: Garland Avenue (Principal Arterial), Berry Street (Local Street), Hughes Street (Local Street)

Street Improvements: The developer is proposing to install curb and gutter along Hughes and Berry Streets as well as storm drainage along Hughes Street. The alley along the east side of the property will be rehabilitated and paved with asphalt, resulting in a 20' width for two-way traffic movements. Additionally, the applicant proposes 8' sidewalks along Hughes Street and Garland Avenue and a 4' sidewalk along Berry Street. The sidewalk along Garland will be partially located outside of the dedicated right-of-way and therefore will be located within a pedestrian access easement. Recommendations for additional improvements may be required once

development plans have been submitted and reviewed, based upon the actual development proposal submitted.

Tree Preservation: Tree preservation requirements will be assessed at the time of large scale development. By ordinance, staff will require preservation of tree canopy on-site unless supportive information is provided as to why on-site preservation requirements can not be met. Supportive information could include a tree inventory provided by a certified arborist assessing all existing tree canopy.

Parks: The Parks and Recreation Advisory Board reviewed this project on August 17, 2006 and recommended accepting money-in-lieu to satisfy the Park Land Dedication Ordinance requirement. Based on the number of units proposed at this time (37, less a credit for five existing homes), $20,360.00 would be required. Actual numbers will be generated at the time of development.

Public Comment: Staff has not received any public opposition to the project. The applicant did present the plans at a Ward 4 meeting with City Council representatives and citizens for input.

Phasing: The development of the 932 Garland project is anticipated to occur over the next 1-4 years. A phasing schedule has been provided within the project booklet, identifying the anticipated construction time frame. Upon Large Scale Development approval, the estimated time frame will be 9-12 months for pre-construction work and 18-20 months for construction. The standard one-year time frame with a one-year extension available for typical large scale developments is adequate, pursuant to City codes.

Recommendation: Staff recommends forwarding a recommendation of approval of the Master Development Plan – Planned Zoning District for 932 Garland (R-PZD 06-2256) to the City Council, with the following conditions:

Conditions of Approval:

1. The Master Development Plan, Statement of Commitments and Architectural Standards submitted by the applicant shall be considered binding and tied to the zoning of the property. Conditions of approval as noted herein and other requirements placed upon the project with review of the Master Development Plan – Planned Zoning District by the City Council, including the statement of commitments and development standards presented in the project booklet, shall also be binding and enforceable by law.

2. Approval of this Master Development Plan – Planned Zoning District shall not be construed as development approval. Pursuant to city ordinance, all development of the property shall be approved by the Planning Commission through the large scale development and/or subdivision review process. The large scale development shall be evaluated based on the zoning and development criteria established with the Master Development Plan. Circulation, landscaping, tree preservation, design standards, connectivity, infrastructure improvements and other city policies and ordinances remain applicable with the development review process. The conceptual designs proposed are

to be used as a template from which detailed plans are produced; however, it is expected that certain items will change, in accordance with the Planned Zoning District ordinance.

3. Zoning and development criteria shall be enforced as approved by the City Council, and currently referenced in the 932 Garland project booklets and on the submitted Master Development Plan plats. Flexibility will be allowed in the development criteria listed in the booklet, but Planning Commission approval of development is required. The approved plans, commitments and standards will be kept on file in the Planning Division, and referenced for subsequent development proposed on the property. All density and intensity information provided is maximum totals for the property.

4. **Signage:** All signage within each Phase of the Master Development Plan shall be permitted in accordance with the current sign regulations at the time of development. More stringent regulations may be placed on tenants within 932 Garland to ensure a cohesive sign program; however, the sign ordinance may not be violated in doing so. Commercial tenants within the project shall be permitted to utilize signage in compliance with commercial zoning districts; all commercial signage shall be placed on the portion of the structure utilized for commercial activities. No signage shall be permitted above the 2nd story of the building, as this is residential in use. No pole or pylon signs shall be permitted within the 932 Garland project site.

5. **Phasing:** In order to ensure the proposed Master Development Plan meets all of the goals and criteria set forth, a phasing schedule has been submitted (reference the project booklet). If certain permitting times are not met, the Planned Zoning District approval shall be voided, or extended as allowed by §166 of the UDC. The following development phasing shall be enforced:
    - The applicant shall be granted one (1) year from the date of Planning Commission approval of the large scale development to receive all permits necessary for development of the Phase with a one (1) year extension available.

6. Public water and sewer lines shall be extended as required by city ordinance at the time of development. Detailed analysis of the existing water and sewer systems will be required to be submitted with the development submittal.

7. Future development shall comply with at least the minimum design standards for development in the Unified Development Code as adopted at the time of develoment, including but not limited to landscaping, parking, access, street design, stormwater detention, tree preservation, etc. All structures proposed shall be reviewed to ensure appropriate architectural compatibility, compliance with commercial design standards, and/or conformance with the architectural standards and concepts provided with the subject submittal.

8. Overhead awnings, balconies, stairways, stoops and other appurtenances to the primary structure may not extend within the Master Street Plan right-of-way. Allowances shall

be at the discretion of the Planning Commission and City Council to ensure safety measures, clearance and other criteria for zoning and development in the Unified Development Code are not compromised.

9. Street improvements at the time of development shall include those determined necessary by the Planning Commission, based upon the development proposed at the time of submittal. Staff will recommend, at minimum, the following:
    - Install curb and gutter along Hughes and Berry Streets as well as storm drainage along Hughes Street. The alley along the east side of the property will be rehabilitated and paved with asphalt, resulting in a 20' width for two-way traffic movements. Additionally, 8' sidewalks will be constructed along Hughes Street, Garland Avenue and Berry Street. The sidewalk along Garland will be partially located outside of the dedicated right-of-way and therefore will be located within a pedestrian access easement. Additional improvements may be required once development plans have been submitted and reviewed in detail.

10. All sidewalks shall meet applicable City and A.D.A. requirements.

11. All development shall meet applicable building codes and other ordinances of the City of Fayetteville.

12. Street lights shall be installed on all abutting streets with a maximum spacing of 300'.

13. Street trees shall be provided pursuant to Chapter 177, Landscape Regulations, pertaining to the provision of urban tree wells in this location. Subject to sight distance limitations, street trees shall be planted along Berry, Hughes and Garland Avenue.

PLANNING COMMISSION ACTION: Required YES

Planning Commission Action: √ Fowarded ☐ Denied ☐ Tabled
Motion: **Graves**
Second: **Clark**
Vote: **8-0-0**
Meeting Date: October 9, 2006

Comments: *The Planning Commission made the following comments:*
-. More windows or doors were recommended for the west elevation at street level, to create a more "inviting" experience at the pedestrian level.
- The width of Garland helped balance the height of the structure.
- Removal of the existing curb-cuts was an improvement to the site.
- Recommended utilizing the same tree species as the University used for the boulevard section.
- Height at the northeast corner of the property was a concern.
- View of Old Main from Garland.
- Good introduction into campus.

CITY COUNCIL ACTION: Required YES

City Council Action: ☐ Approved ☐ Denied ☐ Tabled
Motion: _____
Second: _____
Vote: _____
Meeting Date: November 7, 2006
Comments:

The "CONDITIONS OF APPROVAL", stated in this report, are accepted in total without exception by the entity requesting approval of this rezoning/master development plan item.

_____ _____
By **Date**

R-PZD 932 Garland

Figure 02: Site Plan

b. Summary Description of the Scope Nature and Intent of the Proposal

932 Garland is conceived to reflect the role of Fayetteville as the progressive intellectual and cultural heart of Northwest Arkansas. By projecting an image that is at once comfortably substantial and confidently modern, the building capitalizes on the civic prominence of the site and establishes a positive urban vision for the future development of Garland Avenue. Considering the proximity to the University of Arkansas and the ready access to Interstate 540, the intersection of Garland and North/Wedington serves as a primary northern gateway to the city. Unfortunately, this intersection currently suffers from a lack of cohesive vision resulting in a chaotic suburban environment that is not reflective of the urban character of the university and city beyond.

932 Garland intends to counter such suburban banality with a massing strategy that reinforces Garland Avenue as one of the premier boulevards of the city. A symbolic gateway in the form of a large-scale aperture is incorporated in the design on the northwest corner thereby introducing a definitive point of reference for the 13,000 vehicles and thousands of pedestrians that pass the site daily on their way to and from the University of Arkansas (Figure 01).

The project is located at the edge of the Rose Hill Neighborhood. Rose Hill is largely composed of rental houses and a discordant array of small-scale multi-family apartments that have developed over time in an ad-hock manner. The area has transformed from an owner occupied neighborhood to a rental zone primarily occupied by students attending the university. The quality of the building stock has sharply declined and the charm that had once marked the area has deteriorated significantly. 932 Garland is, therefore, a significant revitalization effort, demonstrating the future growth of the area.

R-PZD 932 Garland

Figure 01: View from Wedington

Introduction

The City of Fayetteville today is poised to capitalize on two decades of sustained growth and prosperity. Significant improvements to the urban infrastructure in conjunction with a re-discovery of the benefits of urban living have contributed to a revolution in how architecture contributes positively to the improvement of the city. Responding to those influences and decidedly contemporary in its urban vision, 932 Garland presents a new landmark for the City of Fayetteville. Positioned near the intersection of two primary avenues at the northern gateway to the university, this building proposal will project to visitors the cultural aspirations of Fayetteville for the 21st Century. Additionally, the range of uses—residential, retail and office space—are synthesized within an urban infill proposal that reflects the spirit of the Fayetteville 2025 City Plan.

The program consists of a single mixed-use structure containing street-level retail along Garland Avenue, rental office space on the second level, and thirty-seven residential condominiums above. The parking will be accommodated on site in a two-level parking garage with access from both Hughes and Berry Streets. The design is directed toward professionals, university professors and families who are attracted to a modern maintenance-free housing option with ready access to the University and other Fayetteville amenities.

a. Current Ownership Information

932 Garland will be constructed on a site that is wholly owned by Mansfield Property Management and is bounded by Garland Avenue (Arkansas 112) to the west, Hughes Street to the north, Berry Street to the south, and a mid-block alley to the east (Figure 02).

Figure 03: View North on Garland

Figure 05: Model View of Area

Figure 04: Model View of Area

R-PZD 932 Garland

With new residential condominiums 932 will re-introduce more permanent residents into the otherwise transient population and serve as a new anchor for the neighborhood.

Although the area is zoned as high-density residential (RMF-40) it is currently under-utilized and under-populated. Increasing land values based on its proximity to the University of Arkansas coupled with low occupant density ensure that this neighborhood is poised to undergo a significant process of densification in the coming years. Considering that the University is also developing northward along Garland, such densification of this transportation corridor is inevitable. Anticipating this trend 932 Garland intends to establish a precedent for developing a strong urban character along the broad Garland Avenue Boulevard (Figure 03). The multi-story residential volumes are shifted toward the west and north of the site in response to the institutional character of the nearby university. buildings. This enables the scale of the project to step down considerably to the east and south in deference to the residential scale of the adjacent properties (Figures 04, 05).

Additionally, this PZD approval enables the project to contribute positively to the street life of Fayetteville by introducing new retail spaces along Garland. The ability to distribute that use along the main avenue responds to the volume of pedestrian traffic moving to and from the university. Additionally, providing of small-scale retail opportunities south of Wedington will offer residents of Rose Hill a shopping venue that is an alternative to negotiating the dangerous vehicular traffic along Wedington.

932 Garland is composed of 37 residential condominiums, 10,264sf of street level retail, a possible 4,550sf restaurant and 8,040sf of office space. The parking is accessed on two

RZN10-3566

One Mile View

932 GARLAND/ JORDAN HOLDINGS

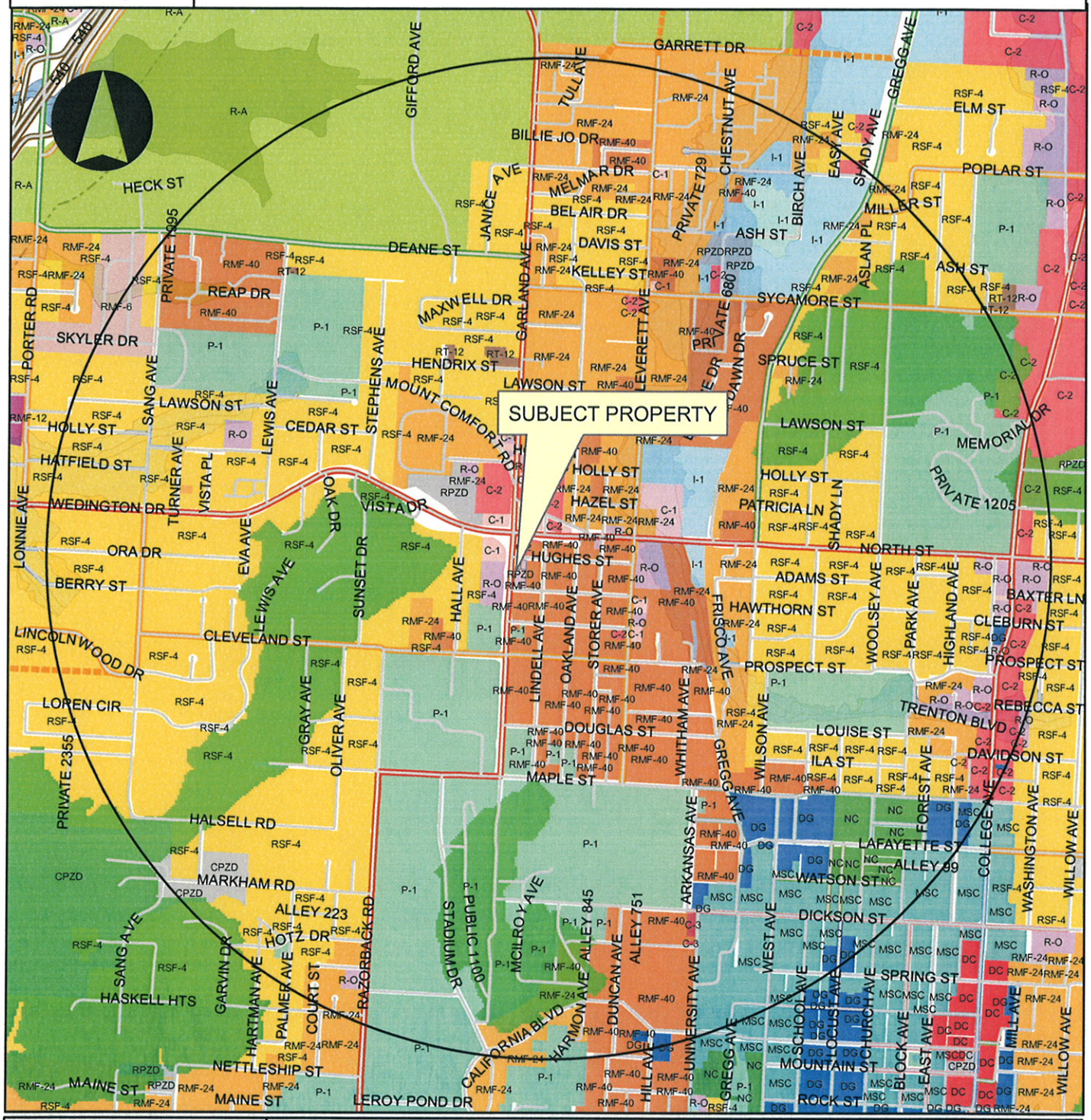

Overview

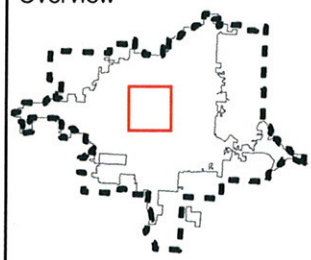

Legend

Subject Property

Boundary

0 0.25 0.5 1 Miles

RZN10-3566

Close Up View

932 GARLAND

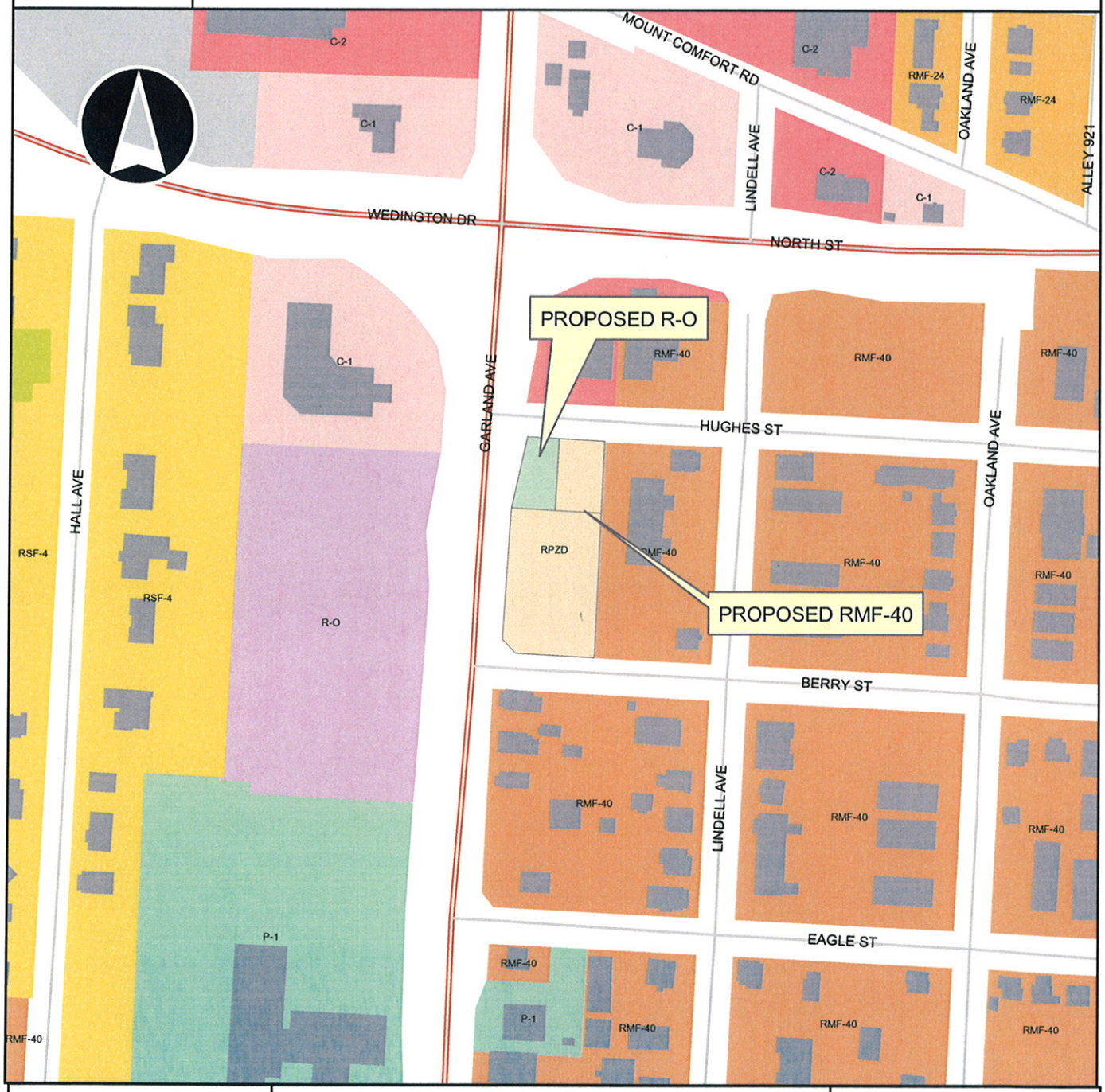

Overview

0 75 150 300 450 600 Feet

City of Fayetteville Staff Review Form

City Council Agenda Items and Contracts, Leases or Agreements

6/15/2010
City Council Meeting Date
Agenda Items Only

Karen Minkel		Strategic Planning
Submitted By	**Division**	**Department**

Action Required:

ADM 09-3273 (Business Registry and License Program): Submitted by Strategic Planning Staff to approve an ordinance to amend the Fayetteville Code by enacting a chapter to create a business registry and to require annual business licenses for all businesses and non-profits with locations in Fayetteville.

$ -	$ -	
Cost of this request	Category / Project Budget	Program Category / Project Name
	$ -	
Account Number	Funds Used to Date	Program / Project Category Name
	$ -	
Project Number	Remaining Balance	Fund Name

Budgeted Item ☐ **Budget Adjustment Attached** ☐

Karen Minkel — Department Director — 5/27/10 Date

City Attorney — 5-28-10 Date

Paul A. Becker — Finance and Internal Services Director — 5-28-2010 Date

Chief of Staff — 5-28-10 Date

Lioneld Jordan — Mayor — 6/1/10 Date

Previous Ordinance or Resolution # _____

Original Contract Date: none

Original Contract Number: _____

Received in City Clerk's Office — ENTERED 5/28/10 Kim

Received in Mayor's Office — ENTERED 5/28/10 SB

Comments:

Revised January 15, 2009

Left on the Second Reading at the 6-15-10 CC mtg.

Fayetteville
ARKANSAS
www.accessfayetteville.org

THE CITY OF FAYETTEVILLE, ARKANSAS
DEPARTMENT CORRESPONDENCE

CITY COUNCIL AGENDA MEMO

To: City Council

Thru: Don Marr, Chief of Staff

From: Karen Minkel, Strategic Planning and Internal Consulting Director KM.

Date: May 26, 2010

Subject: **ADM 09-3273: Administrative Item (Business Registry and License Program):** Approval of an ordinance to amend the Fayetteville Code by enacting a chapter to create a business registry and to require annual business licenses for all businesses and non-profits with locations in Fayetteville.

PROPOSAL:

Strategic Planning staff began researching the feasibility of a business registry program in March 2009 at the request of Alderwoman Shirley Lucas and the Fayetteville Chamber of Commerce due to a lack of publicly accessible data about businesses located within City boundaries. This lack of data negatively affects the City's ability to measure economic development performance and ensure public safety.

Economic Development: The lack of data prevents economic development organizations from providing statistics on job growth and business sector growth and ultimately providing meaningful economic performance measures. Some of these measures include new jobs created and new businesses opened. Without a systematic method for collecting this information, confidence in the accuracy of the measures is compromised.

In addition, the economic development team at the Chamber of Commerce has stated that knowing Fayetteville's business demographics will enable them to find complementary businesses for prospective companies, support retention and expansion and promote existing businesses. Generating this information currently is at best inefficient and, at worst, impossible.

Public Safety: The lack of data also contributes to inefficiencies and public safety concerns. The Central Dispatch Division, the Fire Marshal's Office and the Arkansas Department of Health all spend significant time attempting to track new business openings, moves and re-namings. This lack of information significantly hinders the Fire Marshal's goal of preventing hazardous situations. Anecdotal evidence indicates that the Fire Marshal's office stumbles across a handful of business establishments each year after they have opened or just days before opening that did not undergo a fire inspection. In addition, the City lacks information on the storage of hazardous materials and installation of fire suppression systems. The accuracy of this information is crucial for responding to emergencies safely, effectively and efficiently.

The Ordinance Review Committee discussed the proposed ordinance on January 20, March 3, March 24 and April 21 of 2010. The Committee voted 4-0 to forward the ordinance to the full City Council with neither a recommendation for approval nor denial.

A full outline of the methodology and ordinance components is included in the attached report. Below is a summary of the major requirements.

Who Must Register: All businesses, institutions, corporations, LLCs, LLPs, partnerships, nonprofit associations, sole proprietorships or other non-governmental entities with a business with a physical address or which operates a legally permitted home occupation within the Fayetteville city limits shall be required to apply for a license. Businesses with multiple physical locations would have to obtain a separate license for each address. Religious entities, minors, and landlords with less than three dwelling units and not operating as a corporation, LLC, or LLP shall be exempt.

Program Start Date: The ordinance designates a renewal and application period between January 1 and February 28 each year, with an effective start date of January 3, 2011.

Fee: A cost-recovery fee of $35 will be charged for a paper business application and $32 for an electronic application, which reflects the cost-savings to the City. Home based businesses will be charged a fee of $22.00 for a paper business application and $20.00 for an electronic application. This review process will replace the existing Certificate of Zoning review process, which currently costs $25. Renewal fees will be $15 for all businesses.

New Businesses and Relocations: If a business or institution applies for a new license after September 1, the fee through February 28 of the next year will be half the fee of an annual renewal.

Penalties: Failure to submit a complete application by February 28 will result in the following fees.

- Less than 30 days late: 10% late charge
- 31-60 days late: 20% late charge
- >60 days late: 50% late charge

Grounds for suspension or revocation:

1) Valid complaints that the Business License Holder is operating the business in a dangerously unsanitary or unhealthy manner, or in such a manner as to unreasonably and adversely affect the peace, health or safety of neighbors or other Fayetteville citizens.
2) The determination that the premises are a fire hazard or otherwise unsafe for occupancy because of violations of building, property maintenance or fire codes.
3) The business is delinquent in submitting Hotel, Motel and Restaurant or City alcohol tax forms or in payment of the City's Hotel, Motel and Restaurant taxes or any other city or state taxes or required fees.
4) The business is being operated in violation of any federal or state law or city ordinance or has had a necessary state or city license suspended or revoked.
5) The business license was procured through fraud or misrepresentation.

Process for suspension or revocation: If the Development Services Director has reason to believe that grounds exist that could justify a suspension or revocation, the Director shall send a letter by first class mail and set a date for a due process hearing, which will be conducted by the Chief of Staff.

Appeals process: If the Chief of Staff determines that the license shall be suspended or revoked, the license holder shall have ten days to submit a written appeal to the City Clerk's office. If an appeal is submitted, the

appeal will be heard by the City Council and the City Council will make a final determination. If a written appeal is not submitted to the City Clerk's office during the ten-day period, the license owner automatically waives all rights to the appeal process.

Enforcement: If a license is suspended or revoked and the business continues to operate, each day of operation will constitute a separate violation. The City may withhold all municipal services, including water, sewer and solid waste services, if the business continues to operate with a suspended or revoked license.

Comparison to Other Cities *(Information accurate as of July 2009)*

City	Approximate Fee	Late fee charges	Other
North Little Rock	$45-$1,440	25% penalty if <3 months overdue 50% penalty if >3 months overdue	Additional charges based on employee numbers and stock. Has a renewal period (Jan. 1-Mar. 31)
Hot Springs	$50-$1,200	10% penalty after 30 days	
Springdale	$20		Additional charges based on number of employees
Lowell	$50	10% penalty after 30 days 20% penalty after 60 days 50% penalty after 90 days	Additional charges based on number of employees, number of seats (restaurants) or units (e.g. hotels).
Rogers	$50-$300	10% penalty after 30 days 20% penalty after 60 days 50% penalty after 90 days	Additional charges based on number of employees, number of seats (restaurants) or units (e.g. hotels).
Little Rock	$75-$102,000 (avg. $500)	10% penalty after 30 days addt'l 10% penalty after 60 days 30% penalty after 90 days	Additional charges based on number of employees and/or stock
Fort Smith	$0	None	
Fayetteville (proposed)	$35-paper $32-electronic Home based business fees: $22-paper $20-electronic	10% penalty if late less than 30 days 20% penalty after 30 days 50% penalty after 60 days	

RECOMMENDATION:

Staff recommends that City Council approve an ordinance to amend the Fayetteville Code by enacting a chapter to create a business registry and to require annual business licenses for all businesses and non-profits with locations in Fayetteville.

BUDGET IMPACT:

This program is based on a cost-recovery model, which will make the program cost neutral.

Business Registry and Licensing Program

Prepared by the City of Fayetteville Strategic Planning and Internal
Consulting Department
125 W. Mountain St.
Fayetteville, Ar. 72701
479-575-8267

Updated April 22, 2010

Summary

Strategic Planning staff began researching the feasibility of a business registry program at the request of Alderwoman Shirley Lucas and the Fayetteville Chamber of Commerce in March 2009. The following report outlines the benefits and associated costs of establishing and operating a business registry and licensing program and the relevant departmental responsibilities.

A registry and licensing program will provide the following benefits:

- timely and accurate economic performance data addressing job and industry growth;
- accurate public safety data regarding location, fire suppression systems and the storage of hazardous materials; and
- leverage for the City Prosecutor's office in pursuing tax and code violations.

A three-step cost-recovery methodology determined that the expected cost of processing one business license is $34.80. This cost includes labor and materials and takes into account that some applications will be processed with a minimum of effort while others will need additional staff time to resolve outstanding issues. The methodology also differentiates between a paper application and an electronic application process; the electronic process will result in a cost-savings of $4.83, most of which can be passed on to the customer. In addition, the renewal license process will require less staff time, costing only $15.17.

The project team included:
Don Marr, Chief of Staff;
Jeremy Pate, Development Services Director;
Paul Becker, Finance and Internal Services Director;
Sondra Smith, City Clerk;
Scott Huddleston, Information Technology Director;
Marsha Hertweck, Accounting Director;
Shelly Turberville, Accounting Manager;
Rainy Laycox, Billing and Collections Manager.

The Police Department, Central Dispatch Division, Fire Department City Attorney, Community Services Division, GIS Division, Internal Audit and City Prosecutor's office provided additional feedback on the process and materials.

Issue

The City of Fayetteville currently lacks publicly accessible data about businesses located within its boundaries. This lack of data negatively affects the City's ability to measure economic development performance, ensure public safety and enforce code compliance and tax payment.

Economic Development: The lack of data prevents economic development organizations from providing statistics on job growth and business sector growth and ultimately providing meaningful economic performance measures. Some of these measures include new jobs created and new businesses opened. Without a systematic method for collecting this information, confidence in the accuracy of the measures will be compromised.

Public Safety: The lack of data also contributes to inefficiencies and public safety concerns. The Central Dispatch Division, the Fire Marshal's Office and the Arkansas Department of Health all spend significant time attempting to track new business openings, moves and re-namings. This lack of information significantly hinders the Fire Marshal's goal of preventing hazardous situations. Anecdotal evidence indicates that the Fire Marshal's office stumbles across a handful of business establishments each year after they have opened or just days before opening that did not undergo a fire inspection. In addition, the City lacks information on the storage of hazardous materials and installation of fire suppression systems. The accuracy of this information is crucial for responding to emergencies safely, effectively and efficiently.

The Arkansas Department of Health also lacks information about restaurants and food related businesses in Fayetteville, resulting in inefficiencies in its ongoing inspection program. Determining when businesses open, relocate or close also takes significant staff time that could be better spent providing inspection services, according to an interview with James Shumate, Arkansas Health Department Inspector. The haphazard process also increases the likelihood that a restaurant or other food service provider will slip through the cracks, which if a problem arises, could be detrimental to the health of Fayetteville's citizens and visitors.

Law Enforcement: A business registry and license program will also assist the City Prosecutor's Office in addressing code and tax violations. An ordinance that requires a business license in order to conduct business in the City of Fayetteville will provide additional leverage for the City Prosecutor's office in resolving code and tax violations before they result in a warrant or criminal summons.

Methodology

Staff determined the costs to the City through a three-step process.

Step one: Staff created a process flow chart that illustrates how staff would process an application, incorporating electronic and manual steps. This model also shows the average time it would take each staff member to complete a task. These time allotments were determined after conversations with staff members who would be responsible for the task or who complete similar tasks as part of their daily activities. Colors on the flow chart distinguish between departments. The model incorporates the current certificate of zoning review process, and most additional tasks occur in Development Services. The Accounting Division will review for HMR tax violations and the Fire Marshal's office will review new businesses.

Step two: Staff determined the labor cost per minute using the weighted market salary, which includes benefits, for each staff member identified in the process model. The spreadsheet separated components of the process in order to identify the costs of a paper versus electronic application submittal as well as the initial start-up costs and follow-up costs if an application is unable to be processed. In addition, the spreadsheet calculates the costs associated with materials and mailings. The methodology assumes that there are at least 2,600 businesses in Fayetteville that would be required to register based on a survey completed in 2003 by the City that counted 2,595 businesses within the City limits.

Step three: A decision tree diagram was utilized to determine the expected costs to the City. The diagram incorporates the probability of different events into the cost model, enabling an approximation of the expected costs of processing one license. Assumptions about the assigned probabilities were based on similar City processes and experiences. For example, initial online payments for utility bills averaged two percent upon initial rollout in 2002. Staff assumed this percentage would likely be greater in 2010 and predicted that approximately five percent of businesses would utilize online application and payment services. The Diagram also accounts for initial start up and ongoing costs, which include creating the online application and payment capabilities and annual notifications, respectively. Separate models were utilized to determine renewal costs and costs for home based businesses.

The models determined the following:

1) The total expected cost for processing one license is $34.80.
2) The completion of an online application results in a savings of $4.83 to the City, most of which can be passed on to the customer after covering the service charge associated with online payments.

3) The total expected cost for processing one renewal application is $15.17.
4) The total expected cost for processing one home based business license is $22.49 for a paper application.

Comparison to other Cities in Arkansas[1]

Fayetteville is the only city in Arkansas with a population greater than 50,000 that does not require a business license. Springdale, Rogers, Lowell, Fort Smith, Siloam Springs, Benton, Cabot, Jacksonville, Hot Springs, North Little Rock, Little Rock, Pine Bluff, Sherwood and Eureka Springs all require a business license to conduct business within their city limits.

Cities in Arkansas employ a wide range of methods to determine costs to the applicant. Most other cities charge a base fee depending on the type of business and then add costs based on the number employees and/or a percentage of total stock value. For example, Springdale charges a base fee of $20 and then an additional $2.50 for each employee up to 25 employees; the fee is an additional $1.00 for every employee after the first 25. Little Rock charges $200 plus 0.24% of stock.

Table 1: The average fee for all the cities below except Springdale and Fort Smith are greater than Fayetteville's proposed fee.

City	Fee	Late fee charges	Other
North Little Rock	$45-$1,440	25% penalty if <3 months overdue 50% penalty if >3 months overdue	Additional charges based on employee numbers and stock. Also has a renewal period (Jan. 1-Mar. 31)
Hot Springs	$50-$1,200	10% penalty after 30 days	
Springdale	$20		Additional charges based on number of employees

[1] The information provided in the table is accurate as of July 2009.

Lowell	$50	10% penalty after 30 days 20% penalty after 60 days 50% penalty after 90 days	Additional charges based on number of employees, number of seats (restaurants) or units (e.g. hotels).
Rogers	$50-$300	10% penalty after 30 days 20% penalty after 60 days 50% penalty after 90 days	Additional charges based on number of employees, number of seats (restaurants) or units (e.g. hotels).
Little Rock	$75-$102,000 (avg. $500)	10% penalty after 30 days addt'l 10% penalty after 60 days 30% penalty after 90 days	Additional charges based on number of employees and/or stock
Fort Smith	$0	None	
Fayetteville (proposed)	$35-paper $32-electronic Home based business fees: $22-paper $20-electronic	10% penalty if late less than 30 days 20% penalty after 30 days 50% penalty after 60 days	Proposed renewal fee is $15.00

Program Structure

Who Must Register

All businesses, institutions, corporations, LLCs, LLPs, partnerships, nonprofit associations, sole proprietorships or other non-governmental entities with a business with a physical address or which operates a legally permitted home occupation within the Fayetteville city limits shall be required to apply for a license. Businesses with multiple physical locations would have to obtain a separate license for each address. Religious entities, minors, and landlords with less than three dwelling units and not operating as a corporation, LLC, or LLP shall be exempt.

Program Start Date

The IT Division estimates that approximately six months will be needed to complete the electronic processing and online payment capabilities. The

ordinance designates a renewal and application period between January 1 and February 28 each year, with an effective start date of January 3, 2011.

General Requirements

Fee: A cost-recovery fee of $35 will be charged for a paper business application and $32 for an electronic application, which reflects the cost-savings to the City. Home based businesses will be charged a fee of $22.00 for a paper business application and $20.00 for an electronic application. This review process will replace the existing Certificate of Zoning review process, which currently costs $25. Renewal fees will be $15 for all businesses.

New Businesses and Relocations: If a business or institution applies for a new license after September 1, the fee through February 28 of the next year will be half the fee of an annual renewal.

Posting: Each license shall be posted in a highly visible place where the business, occupation or profession is carried on, and the holder of such license shall exhibit such license to any designated agent or official of the city upon request.

Transfer: A business license shall be nontransferable from one person to another nor from one location to another.

Penalties: Failure to submit a complete application by February 28 will result in the following fees.

- Less than 30 days late: (10%)
- 31-60 days late: (20%)
- >60 days late: (50%)

Grounds for suspension or revocation:

1) Valid complaints that the Business License Holder is operating the business in a dangerously unsanitary or unhealthy manner, or in such a manner as to unreasonably and adversely affect the peace, health or safety of neighbors or other Fayetteville citizens.
2) The determination that the premises are a fire hazard or otherwise unsafe for occupancy because of violations of building, property maintenance or fire codes.
3) The business is delinquent in submitting Hotel, Motel and Restaurant or City alcohol tax forms or in payment of the City's Hotel, Motel and Restaurant taxes or any other city or state taxes or required fees.
4) The business is being operated in violation of any federal or state law or city ordinance or has had a necessary state or city license suspended or revoked.
5) The business license was procured through fraud or misrepresentation.

Process for suspension or revocation: If the Development Services Director has reason to believe that grounds exist that could justify a suspension or revocation, the Director shall send a letter by first class mail and set a date for a due process hearing, which will be conducted by the Chief of Staff.

Appeals process: If the Chief of Staff determines that the license shall be suspended or revoked, the license holder shall have ten days to submit a written appeal to the City Clerk's office. If an appeal is submitted, the appeal will be heard by the City Council and the City Council will make a final determination. If a written appeal is not submitted to the City Clerk's office during the ten-day period, the license owner automatically waives all rights to the appeal process.

Enforcement: If a license is suspended or revoked and the business continues to operate, each day of operation will constitute a separate violation. The City may withhold all municipal services, including water, sewer and solid waste services, if the business continues to operate with a suspended or revoked license.

Business Registry Application Process

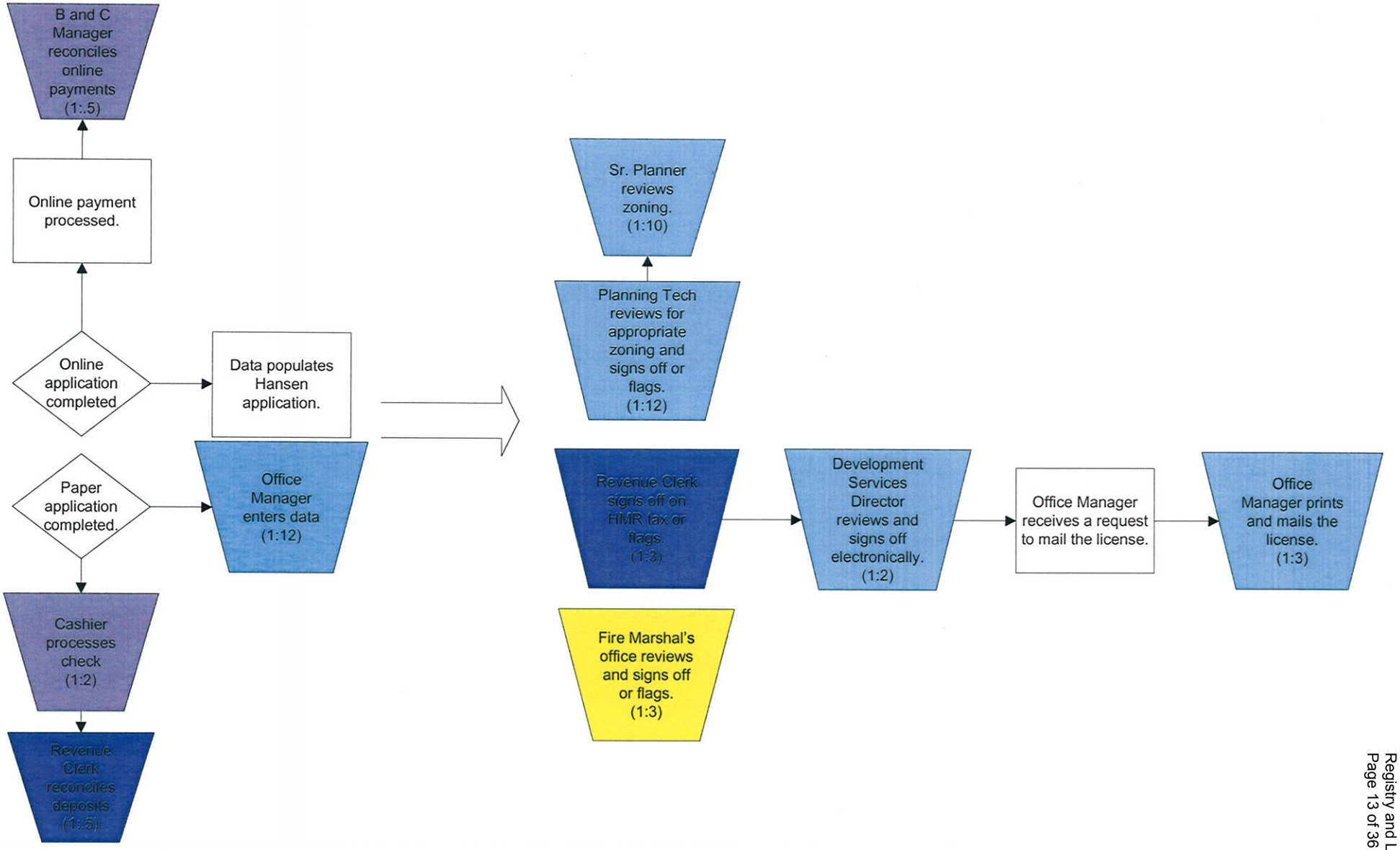

FAYETTEVILLE
THE CITY OF FAYETTEVILLE, ARKANSAS

KIT WILLIAMS, CITY ATTORNEY
DAVID WHITAKER, ASST. CITY ATTORNEY

DEPARTMENTAL CORRESPONDENCE

LEGAL DEPARTMENT

TO: **Sondra Smith**, City Clerk

FROM: **Kit Williams**, City Attorney

DATE: **June 16, 2010**

RE: **Business Registry and License Ordinance**

Attached please find the corrected version of the ordinance which should be **substituted for** the version used in the June 15th Agenda. I found four minor errors in the ordinance as I read it aloud to the City Council and public last night. I did read it correctly. The errors that I caught and have now been corrected were:

(1) Lack of "**NOW, THEREFORE**" after the Whereas clauses and before "**BE IT ORDAINED** ..."

(2) §118.03 (C)(iii): omission of "evidence" after "consider all previous" near the end of (iii) on page 7.

(3) §118.05 **Penalty**

Improper use of subsection (1) under both (A) and (B) when there was no subsection (2). Both "(1)"s have been deleted.

These are all "scriveners errors" that do not change the meaning or substance of the ordinance and thus do not need City Council action, but can be administratively corrected. Please discard the incorrect version.

ORDINANCE NO. _____

AN ORDINANCE TO AMEND THE FAYETTEVILLE CODE BY ENACTING A CHAPTER TO CREATE A BUSINESS REGISTRY AND TO REQUIRE ANNUAL BUSINESS LICENSES FOR ALL BUSINESSES AND NON-PROFITS WITH LOCATIONS WITHIN FAYETTEVILLE

WHEREAS, collecting accurate business and employee data will help the City better track business growth, employment and development; and

WHEREAS, all information will be compiled and collected within the Business Registry which will be available to the businesses and public; and

WHEREAS, accurate reporting of new businesses entering Fayetteville and their addresses will assist Central Dispatch keeping their 911 information up-to-date; and

WHEREAS, accurate reporting of flammable or explosive material storage will provide increased safety for Fayetteville Fire Fighters responding to building fires; and

WHEREAS, the City's effort to collect overdue Hotel, Motel and Restaurant taxes will be assisted if the offending business could lose its business license for failing to promptly and completely remit to the City the taxes paid by its customers.

NOW, THEREFORE BE IT ORDAINED BY THE CITY COUNCIL OF THE CITY OF FAYETTEVILLE, ARKANSAS:

Section 1: That the City Council of the City of Fayetteville, Arkansas hereby enacts **Chapter 118 Business Registry and Licenses** of the Fayetteville Code as shown below:

"Chapter 118 Business Registry and Licenses
"§118.01 Applicability.

"*(A) General businesses.*

"(1) All businesses, institutions, corporations, LLCs, LLPs, partnerships, non-profit associations or corporations, sole proprietorships or other non-governmental entities with a physical address or which operates a legally permitted home occupation within the Fayetteville city limits shall be required to file for the City of Fayetteville Business Registry and License. A covered business or entity with multiple physical addresses in Fayetteville must obtain a separate business license for each such business address.

"(2) In addition, any person or non-governmental entity who has or should have a sales tax permit and operates out of a physical address within Fayetteville shall be required to file for the City of Fayetteville Business Registry and License.

"(3) In addition, any person or non-governmental entity who is engaged in any trade or occupation which requires federal or state licenses and who operates out of a physical address within Fayetteville shall be required to file for the City of Fayetteville Business Registry and License.

"*(B) Religious entities.*

"Churches and other religious institutions are exempt from this chapter unless they are performing functions like daycare that must be licensed by the state or that generate revenue upon which state sales or use taxes must be paid. The City Business License shall not be required for the religious entity but only for those functions that require a state license or upon which state sales or use taxes must be paid.

"(C) *Minors exempt.*

"No individual under eighteen years of age shall be required to register or obtain a business license.

"(D) *Individual landlords renting less than three dwelling units exempt.*

"An individual landlord, not operating as a corporation, LLC, LLP, or other business entity, who rents out less than three dwelling units, and no commercial, industrial, or institutional unit, site or building shall be exempt from this chapter.

"§118.02 Entry upon Business Registry and Issuance of Business License.

"(A) *Annual application required.*

"Every applicable business or other entity identified in §118.01 shall annually complete the Application For Business Registry And License (substantially as shown on Exhibit A and which can be administratively amended by the Mayor) and pay the appropriate fee as required by this chapter.

"(B) *Time for Application submittal.*

"Applications and annual renewals for existing business license holders shall be completed between January 1 and February 28 each year. Business licenses shall be issued for a fiscal year of March 1 to February 28. New businesses, businesses locating to Fayetteville or entities to which these provisions become applicable in the future shall register and obtain their business license within two months of their move into Fayetteville or commencement of activities.

"(C) *Fees.*

"(1) *Home based business.* A resident conducting a non-traffic generating occupation, profession or business within the resident's dwelling unit who is registering for the first time shall pay an annual fee to submit an Application For Business Registry and License of $22.00 if submitted by February 28, except if the home based business owner registers electronically, the owner shall receive a $2.00 credit against the annual fee and pay only $20.00.

Applications submitted after the February 28 deadline shall incur a fee of $24.00 if submitted by March 31; $26.00 if submitted by April 30, and $30.00 if submitted thereafter. After an initial registration and receipt of a business license, the next year's renewal fee shall be $15.00 if timely paid. Otherwise, late payment fees shall be as assessed above.

"(2) *All other (non-home based) businesses.* Annual fees to submit the business's first Application For Business Registry and License shall be $35.00 if submitted by February 28, except that if a business registers electronically it shall receive a $3.00 credit against its annual fee and only be assessed $32.00. Applications submitted after the February 28 deadline shall incur a fee of $38.00 if submitted by March 31; $41.00 if submitted by April 30, and $52.00 if submitted thereafter. After an initial registration and receipt of a business license, the next year's renewal shall be $15.00 if timely paid. Otherwise, the late payment fees shall be assessed as above.

"(3) *Partial year registration fee for new* business. If a new business or entity registers and applies for a license after September 1, the fee for the business license through February 28 of the next year shall be $17.00 except that if a business registers electronically it shall receive a $2.00 credit against its partial year fee and only be assessed $15.00.

"(D) *Issuance of Business License.*

"(1) The Director of Development Services or designee shall promptly issue a business license to any applicable business or entity which properly completes the Application For Business Registry and License, pays the proper fee, and is not ineligible for a business license because of prior suspension or revocation of the license, lack of a required state or city permit, or violation of state law or city ordinance.

"(2) The registration and business license is not transferable nor assignable. Upon the sale, merger or transfer of business ownership, the new owner must register and apply for a new business license within thirty days of the date of transfer or reopening of the business.

"(3) If the Director of Development Services initially refuses to issue a business license, the applicant shall be entitled to a due process hearing before the Chief of Staff concerning the grounds for refusal to issue the license. An applicant can appeal the Chief of Staff's decision to the City Council in the same manner prescribed for an appeal of the Chief of Staff's decision to suspend or revoke a business license.

"(E) *Display of business license.*

"Every business and other entity receiving a business license shall prominently display the business license near any other licenses required for the business and issued by a government entity. The business license shall be displayed where customers or visitors entering the establishment will be able to view the business license.

"§118.03 Suspension and Revocation of Business License

"(A) *Grounds That Could Support Suspension or Revocation of Business License.*

"(1) Valid complaints that the Business License Holder is operating the business in a dangerously unsanitary or unhealthy manner, or in such manner as to unreasonable and adversely affect the peace, health or safety of neighbors or other Fayetteville citizens.

"(2) The determination that the premises are a fire hazard or otherwise unsafe for occupancy because of violations of building, property maintenance or fire codes.

"(3) The business is delinquent in submitting Hotel, Motel and Restaurant or City alcohol tax forms or in payment of the City's Hotel, Motel and Restaurant taxes or any other city or state taxes or required fees.

"(4) The business is being operated in violation of any federal or state law or city ordinance or has had a necessary state or city license suspended or revoked.

"(5) The business license was procured through fraud or misrepresentation.

"(B) *Notice.*

"If the Director of Development Services has reason to believe that grounds exist that could justify the suspension or revocation of a business license, the Director shall mail a letter to the Business Mailing Address shown on the application by first class mail notifying the business owner of the possible grounds to suspend or revoke the license and setting a due process hearing in not less than five nor more than ten business days. The Director shall also telephone the business owner using the Business Phone number provided on the Application (as well as the Emergency Phone Number if the owner cannot be reached on the Business Phone number) and provide the same information as is within the letter.

"(C) *Conduct of the Due Process Hearing.*

"(1) The Chief of Staff shall provide a reasonable space for the due process hearing and shall receive evidence from city employees or others about the grounds to suspend or revoke the business license.

"(2) The Business License Holder shall then be granted an opportunity to explain or provide evidence to rebut any allegations and to show why the business license should not be suspended or revoked.

"(3) After the Business License Holder has had a reasonable opportunity to explain his side, the Chief of Staff can do one of the following depending upon the Chief of Staff's judgment of the seriousness of any proven ground:

"(i) Revoke the Business License.

"(ii) Suspend the Business License for not more than Thirty (30) days.

"(iii) Place the Business on probation status for not more than ninety (90) days on condition that the grounds causing

the problems will be remedied by the business license owner and not be allowed to reoccur. If the business license owner complies with the probation, the probation status shall be lifted and no further action shall be taken. If the Chief of Staff determines that the business license owner has failed to correct the problems or new grounds or suspension or revocation have occurred, the Chief of Staff shall conduct a second due process hearing and consider all previous evidence whether or not the business license should be suspended or revoked.

"(iv) Refuse to revoke or suspend the license which shall remain valid. Any complaint about events leading to the hearing shall not be considered again.

"§118.04 Appeal To City Council

"Any person or entity whose license has been suspended or revoked pursuant to §118.03 may appeal such suspension or revocation to the City Council by providing the City Clerk's Office with a written request for City Council review within ten business days of the issuance of the suspension or revocation. The City Council may then determine, after a public hearing in which the business license owner may present evidence and explanations, whether the business owner's license should be suspended for not more than thirty (30) days, revoked because of the grounds presented, or that no suspension or revocation is warranted.

"§118.05 Penalty

"(A) *Fines.*

"No business or other entity who is required by this chapter to obtain a business license shall operate without having and displaying at the business a valid and current City of Fayetteville Business License. Operating without a license shall be a violation punishable by a fine of up to $250.00 per day of operation.

"(B) *City Services Termination.*

"If a business or entity continues to operate without a valid and current City of Fayetteville Business License for a period of one

week after notification by the Director of Development Services, the Mayor may order the withholding of all city services including water, sewer and solid waste for the business premises."

Section 2: That the City Council of the City of Fayetteville, Arkansas hereby determines that this ordinance shall go into effect on January 3, 2011 to begin the issuance process of business licenses with the requirement that all affected entities shall have applied for the business registry and received their licenses by March 1, 2011.

PASSED and **APPROVED** this 4th day of May, 2010.

APPROVED:

By: _____
LIONELD JORDAN, Mayor

ATTEST:

By: _____
SONDRA E. SMITH, City Clerk/Treasurer

FAYETTEVILLE
THE CITY OF FAYETTEVILLE, ARKANSAS

KIT WILLIAMS, CITY ATTORNEY
DAVID WHITAKER, ASST. CITY ATTORNEY

DEPARTMENTAL CORRESPONDENCE

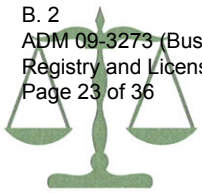

LEGAL DEPARTMENT

TO: **Lioneld Jordan**, Mayor
City Council

CC: **Don Marr**, Chief of Staff
Karen Minkel, Strategic Planning Director

FROM: **Kit Williams**, City Attorney

DATE: **June 16, 2010**

RE: **Two-thirds vote of all members elected to the City Council needed to pass Business Registry and License Ordinance**

I believe the Business Registry and License Ordinance is controlled by A.C.A. §26-77-102 **Authority to tax or license businesses.**

> "Any city council … shall have the power to enact, by a two-thirds (2/3) vote of all members elected thereto, ordinances requiring any person, firm, individual, or corporation who shall engage in, carry on, or follow any trade, business, profession, vocation, or calling, within the corporate limits of the city or town, to pay a license fee or tax …."

I believe that the statute's use of the "fee or tax" phrase clearly expresses the legislative intent to grant **two** kinds of authorities to cities. The first is to license businesses, and the second is to tax businesses. The statute clearly gives a city the right to require "any person, firm, individual or corporation … to pay a license **fee or tax** …." *Id.* (emphasis added)

There is a clear and well established legal difference between a fee (an amount of money to offset the administrative costs of a city program or service) and a tax (a revenue generating exaction).

> "The distinction between a tax and a fee is that government imposes a tax for general revenue purposes, but a fee is imposed in the government's exercise of its police powers." *Harris v. City of Little Rock,* 344 Ark. 95, 40 S.W. 3rd 214, 221 (2001) (citations omitted).

When the legislature chose to authorize a city to require payment of "a license fee or tax", it must have intended to grant authority to cities to require payment of business license fees as well as occupational taxes through this statute.

> "In construing a statute, we will presume that the General Assembly, in enacting it, possessed the full knowledge of the constitutional scope of its powers, full knowledge of prior legislation on the same subject, and full knowledge of judicial decisions under preexisting law. *Bunch v. State,* 344 Ark. 730, 43 S.W. 3d 132, 136 (2001) (citations omitted)

Because the legislature is presumed to have full knowledge of the distinction between "a license fee or tax", it must have intended this statute's requirements to apply to both a business license fee ordinance as well as a business license tax ordinance. Indeed, the Arkansas Supreme Court held "that the authority to impose an occupation licensing fee is expressly delegated to the City by the legislature under (the prior codification of A.C.A. §26-77-102) ...." *City of Mountain Home v. Drake,* 281 Ark. 336, 663 S.W. 2d 738, 739 (1984).

The Arkansas Supreme Court has long and repeatedly held that certain common sense rules should be used when interpreting a statute or ordinance.

> "The basic rule of statutory construction is to give effect to the intent of the legislature. Where the language of a statute is plain and unambiguous, we determine legislative intent from the ordinary meaning of the language used. In considering the meaning of a statute, we construe it just as it reads, giving the words their ordinary and usually accepted meaning in common language. We construe the statute so that no word is left void, superfluous or insignificant, and we give meaning and effect to every word in the statute, if possible. *CitiFinancial Mortgage Co., Inc. v. Matthews*, 372 Ark. 167, 271 S.W. 3rd 501, 506 (2008).

Although A.C.A. §26-77-102 clearly authorizes the City Council to enact a business license ordinance, there could be a question whether this very inclusive business registry and license ordinance, which is applicable to all non-governmental businesses and entities in Fayetteville, could be enacted under the more general police power statutes instead of A.C.A. §26-77-102. I do not believe this would legally be allowed by the Courts.

> "We have long held that a general statute must yield when there is a specific statute involving particular subject matter." *Daimler Chrysler Services, Inc. v. Weiss*, 360 Ark. 188, 200 S.W. 3rd 405, 410 (2004).
>
> "Further, it is blackletter law for statutory construction to give effect to the specific statute over the general." *Searcy Farm v. Merchants & Planters Bank*, 369 Ark. 487, 256 S.W. 3d 496, 501 (2007).

Since this state statute clearly involves the particular subject matter of a city-wide business licensing program, our ordinance must be enacted according to its requirements.

Therefore, we must follow the requirements of A.C.A. 26-77-102 (a) to legally enact the Business Registry and License Ordinance. This statute requires "**a two-thirds (2/3) vote of all members elected thereto**" which refers back to "city council." This is virtually identical language to what is found in Amendment 7 to the Arkansas Constitution as what is needed to repeal an initiated Act " **two-thirds of all the members elected to ... the City Council** ...." This language has been interpreted by the Arkansas Supreme Court to exclude the Mayor from the right to vote on such repeal (or any emergency clause).

> "The court found that the mayor was not an elected member of the City Council but only an ex-officio member by virtue of his executive position and therefore his vote could not be used in amending or repealing any part of an initiated act, and we concur." *Thompson v. Younts,* 282 Ark. 524, 669 S.W. 2d 471, 474 (1984).

Because this statute uses the "members elected" to the City Council language, Mayor Jordan is prevented by A.C.A. §26-77-102 (a) from voting on this Business Registry and License Ordinance.

CONCLUSION

In order to pass, the Business Registry and License Ordinance will need six affirmative votes from the members elected to the Fayetteville City Council.

FAYETTEVILLE
THE CITY OF FAYETTEVILLE, ARKANSAS

KIT WILLIAMS, CITY ATTORNEY
DAVID WHITAKER, ASST. CITY ATTORNEY

LEGAL DEPARTMENT

DEPARTMENTAL CORRESPONDENCE

TO: **Mayor Jordan**
City Council

CC: **Don Marr**, Chief of Staff
Karen Minkel, Strategic Planning Director

FROM: **Kit Williams**, City Attorney

DATE: **May 28, 2010**

RE: **Business Registry and License Ordinance referral to City Council**

After at least four Ordinance Review Committee meetings and one meeting conducted by Eva Madison through her position with Fayetteville Forward, the Ordinance Review Committee has agreed that the ordinance they are forwarding to you is in its preferred form and content. The Ordinance Review Committee neither recommended approval nor denial of the proposed Business Registry and License Ordinance, but wanted to present it to the full City Council for further public comment and final decision.

This ordinance is designed to require virtually every person or nongovernmental entity conducting business or nonprofit work from a Fayetteville location to fill out an application, pay a fee, register for the City Business Registry, and obtain a business license to conduct business, professional or nonprofit activity in Fayetteville

The proposed fee for the Business Registry application has been reduced from the initially proposed $64.00 to the currently proposed $35.00 for most businesses and nonprofits and to $22.00 for "home based businesses." The annual renewal has been dropped even further to $15.00 (less than a quarter of the initial proposal).

I believe enacting the proposed ordinance is within the power and authority of the City Council. I take no position on the merits or drawbacks of establishing a business license requirement.

BUSINESS LICENSE HISTORY IN FAYETTEVILLE

The Fayetteville occupation license tax was imposed by the voters (3,013 for and 2,507 against) in an election on May 26, 1976. The license fee was $50.00 for each "professional"; $15.00 for each "non-professional employer", plus $6.00 for each employee (up to $500 for a business). Other independent workers (non-employees) working 30 hours or more weekly were supposed to pay $15.00.

On July 7, 1981, the City of Fayetteville Board of Directors unanimously passed a motion to approve a recommendation from the Board Finance Committee that stated in part: "The Board has reaffirmed, however, that the city will cancel the occupation license tax ... if the city-county sales tax passes." (Board of Directors meeting minutes) The sales tax passed and is still in effect today. On August 4, 1981, the Fayetteville Board passed Ordinance No. 2739 "An Ordinance Repealing The Fayetteville Occupation Tax."

I was initially concerned that the efficient city staff might actually be able to administer the business registry and license program for less than the proposed $64.00 fee ($57.00 for internet application). I asked that the anticipated city savings (for 911 dispatch, etc.) be deducted from the administrative costs to ensure the City would not be making a "profit" on the business license fee which would legally change this fee into a tax. . *City of Texarkana v. Hudgins Produce Company,* 112 Ark. 17, 164 S.W. 739 (1914); *Carpenter v. City of Little Rock,* 101 Ark. 238, 142 S.W. 163 (1911).

The proposed fee now takes into account all anticipated savings for the City and has been reduced about 50% (and more than 75% for renewals). These lower fees ensure that there should be no successful legal challenges to the amount of the fee proposed by staff and approved by the Ordinance Review Committee. The Courts grant discretion to the City Council to fix a reasonable fee. *City of Fayetteville v. Carter,* 52 Ark. 301, 12 S.W. 573 (1889).

Revised

ORDINANCE NO. _____

AN ORDINANCE TO AMEND THE FAYETTEVILLE CODE BY ENACTING A CHAPTER TO CREATE A BUSINESS REGISTRY AND TO REQUIRE ANNUAL BUSINESS LICENSES FOR ALL BUSINESSES AND NON-PROFITS WITH LOCATIONS WITHIN FAYETTEVILLE

WHEREAS, collecting accurate business and employee data will help the City better track business growth, employment and development; and

WHEREAS, all information will be compiled and collected within the Business Registry which will be available to the businesses and public; and

WHEREAS, accurate reporting of new businesses entering Fayetteville and their addresses will assist Central Dispatch keeping their 911 information up-to-date; and

WHEREAS, accurate reporting of flammable or explosive material storage will provide increased safety for Fayetteville Fire Fighters responding to building fires; and

WHEREAS, the City's effort to collect overdue Hotel, Motel and Restaurant taxes will be assisted if the offending business could lose its business license for failing to promptly and completely remit to the City the taxes paid by its customers.

BE IT ORDAINED BY THE CITY COUNCIL OF THE CITY OF FAYETTEVILLE, ARKANSAS:

Section 1: That the City Council of the City of Fayetteville, Arkansas hereby enacts **Chapter 118 Business Registry and Licenses** of the Fayetteville Code as shown below:

Revised

"Chapter 118 Business Registry and Licenses
"§118.01 Applicability.

"*(A) General businesses.*

"(1) All businesses, institutions, corporations, LLCs, LLPs, partnerships, non-profit associations or corporations, sole proprietorships or other non-governmental entities with a physical address or which operates a legally permitted home occupation within the Fayetteville city limits shall be required to file for the City of Fayetteville Business Registry and License. A covered business or entity with multiple physical addresses in Fayetteville must obtain a separate business license for each such business address.

"(2) In addition, any person or non-governmental entity who has or should have a sales tax permit and operates out of a physical address within Fayetteville shall be required to file for the City of Fayetteville Business Registry and License.

"(3) In addition, any person or non-governmental entity who is engaged in any trade or occupation which requires federal or state licenses and who operates out of a physical address within Fayetteville shall be required to file for the City of Fayetteville Business Registry and License.

"*(B) Religious entities.*

"Churches and other religious institutions are exempt from this chapter unless they are performing functions like daycare that must be licensed by the state or that generate revenue upon which state sales or use taxes must be paid. The City Business License shall not be required for the religious entity but only for those functions that require a state license or upon which state sales or use taxes must be paid.

"(C) *Minors exempt.*

"No individual under eighteen years of age shall be required to register or obtain a business license.

"(D) *Individual landlords renting less than three dwelling units exempt.*

"An individual landlord, not operating as a corporation, LLC, LLP, or other business entity, who rents out less than three dwelling units, and no commercial, industrial, or institutional unit, site or building shall be exempt from this chapter.

"§118.02 Entry upon Business Registry and Issuance of Business License.

"(A) *Annual application required.*

"Every applicable business or other entity identified in §118.01 shall annually complete the Application For Business Registry And License (substantially as shown on Exhibit A and which can be administratively amended by the Mayor) and pay the appropriate fee as required by this chapter.

"(B) *Time for Application submittal.*

"Applications and annual renewals for existing business license holders shall be completed between January 1 and February 28 each year. Business licenses shall be issued for a fiscal year of March 1 to February 28. New businesses, businesses locating to Fayetteville or entities to which these provisions become applicable in the future shall register and obtain their business license within two months of their move into Fayetteville or commencement of activities.

"(C) *Fees.*

"(1) *Home based business.* A resident conducting a non-traffic generating occupation, profession or business within the resident's dwelling unit who is registering for the first time shall pay an annual fee to submit an Application For Business Registry and License of $22.00 if submitted by February 28, except if the home based business owner registers electronically, the owner shall receive a $2.00 credit against the annual fee and pay only $20.00.

Applications submitted after the February 28 deadline shall incur a fee of $24.00 if submitted by March 31; $26.00 if submitted by April 30, and $30.00 if submitted thereafter. After an initial registration and receipt of a business license, the next year's renewal fee shall be $15.00 if timely paid. Otherwise, late payment fees shall be as assessed above.

"(2) *All other (non-home based) businesses.* Annual fees to submit the business's first Application For Business Registry and License shall be $35.00 if submitted by February 28, except that if a business registers electronically it shall receive a $3.00 credit against its annual fee and only be assessed $32.00. Applications submitted after the February 28 deadline shall incur a fee of $38.00 if submitted by March 31; $41.00 if submitted by April 30, and $52.00 if submitted thereafter. After an initial registration and receipt of a business license, the next year's renewal shall be $15.00 if timely paid. Otherwise, the late payment fees shall be assessed as above.

"(3) *Partial year registration fee for new* business. If a new business or entity registers and applies for a license after September 1, the fee for the business license through February 28 of the next year shall be $17.00 except that if a business registers electronically it shall receive a $2.00 credit against its partial year fee and only be assessed $15.00.

"(D) *Issuance of Business License.*

"(1) The Director of Development Services or designee shall promptly issue a business license to any applicable business or entity which properly completes the Application For Business Registry and License, pays the proper fee, and is not ineligible for a business license because of prior suspension or revocation of the license, lack of a required state or city permit, or violation of state law or city ordinance.

"(2) The registration and business license is not transferable nor assignable. Upon the sale, merger or transfer of business ownership, the new owner must register and apply for a new business license within thirty days of the date of transfer or reopening of the business.

"(3) If the Director of Development Services initially refuses to issue a business license, the applicant shall be entitled to a due process hearing before the Chief of Staff concerning the grounds for refusal to issue the license. An applicant can appeal the Chief of Staff's decision to the City Council in the same manner prescribed for an appeal of the Chief of Staff's decision to suspend or revoke a business license.

"(E) *Display of business license.*

"Every business and other entity receiving a business license shall prominently display the business license near any other licenses required for the business and issued by a government entity. The business license shall be displayed where customers or visitors entering the establishment will be able to view the business license.

"§118.03 Suspension and Revocation of Business License

"(A) *Grounds That Could Support Suspension or Revocation of Business License.*

"(1) Valid complaints that the Business License Holder is operating the business in a dangerously unsanitary or unhealthy manner, or in such manner as to unreasonable and adversely affect the peace, health or safety of neighbors or other Fayetteville citizens.

"(2) The determination that the premises are a fire hazard or otherwise unsafe for occupancy because of violations of building, property maintenance or fire codes.

"(3) The business is delinquent in submitting Hotel, Motel and Restaurant or City alcohol tax forms or in payment of the City's Hotel, Motel and Restaurant taxes or any other city or state taxes or required fees.

"(4) The business is being operated in violation of any federal or state law or city ordinance or has had a necessary state or city license suspended or revoked.

"(5) The business license was procured through fraud or misrepresentation.

"(B) *Notice.*

"If the Director of Development Services has reason to believe that grounds exist that could justify the suspension or revocation of a business license, the Director shall mail a letter to the Business Mailing Address shown on the application by first class mail notifying the business owner of the possible grounds to suspend or revoke the license and setting a due process hearing in not less than five nor more than ten business days. The Director shall also telephone the business owner using the Business Phone number provided on the Application (as well as the Emergency Phone Number if the owner cannot be reached on the Business Phone number) and provide the same information as is within the letter.

"(C) *Conduct of the Due Process Hearing.*

"(1) The Chief of Staff shall provide a reasonable space for the due process hearing and shall receive evidence from city employees or others about the grounds to suspend or revoke the business license.

"(2) The Business License Holder shall then be granted an opportunity to explain or provide evidence to rebut any allegations and to show why the business license should not be suspended or revoked.

"(3) After the Business License Holder has had a reasonable opportunity to explain his side, the Chief of Staff can do one of the following depending upon the Chief of Staff's judgment of the seriousness of any proven ground:

"(i) Revoke the Business License.

"(ii) Suspend the Business License for not more than Thirty (30) days.

"(iii) Place the Business on probation status for not more than ninety (90) days on condition that the grounds causing

Revised

the problems will be remedied by the business license owner and not be allowed to reoccur. If the business license owner complies with the probation, the probation status shall be lifted and no further action shall be taken. If the Chief of Staff determines that the business license owner has failed to correct the problems or new grounds or suspension or revocation have occurred, the Chief of Staff shall conduct a second due process hearing and consider all previous whether or not the business license should be suspended or revoked.

"(iv) Refuse to revoke or suspend the license which shall remain valid. Any complaint about events leading to the hearing shall not be considered again.

"§118.04 Appeal To City Council

"Any person or entity whose license has been suspended or revoked pursuant to §118.03 may appeal such suspension or revocation to the City Council by providing the City Clerk's Office with a written request for City Council review within ten business days of the issuance of the suspension or revocation. The City Council may then determine, after a public hearing in which the business license owner may present evidence and explanations, whether the business owner's license should be suspended for not more than thirty (30) days, revoked because of the grounds presented, or that no suspension or revocation is warranted.

"§118.05 Penalty

"(A) *Fines.*

"(1) No business or other entity who is required by this chapter to obtain a business license shall operate without having and displaying at the business a valid and current City of Fayetteville Business License. Operating without a license shall be a violation punishable by a fine of up to $250.00 per day of operation.

"(B) *City Services Termination.*

"(1) If a business or entity continues to operate without a valid and current City of Fayetteville Business License for a period of one

week after notification by the Director of Development Services, the Mayor may order the withholding of all city services including water, sewer and solid waste for the business premises."

Section 2: That the City Council of the City of Fayetteville, Arkansas hereby determines that this ordinance shall go into effect on January 3, 2011 to begin the issuance process of business licenses with the requirement that all affected entities shall have applied for the business registry and received their licenses by March 1, 2011.

PASSED and **APPROVED** this 15th day of June, 2010.

APPROVED: ATTEST:

By: _____ By: _____

LIONELD JORDAN, Mayor **SONDRA E. SMITH**, City Clerk/Treasurer

City of Fayetteville Staff Review Form

City Council Agenda Items
and
Contracts, Leases or Agreements

6/15/2010
City Council Meeting Date
Agenda Items Only

Connie Edmonston/Alison Jumper	Park Planning	Parks and Recreation
Submitted By	**Division**	**Department**

Action Required:

ADM-10-3601-Amend the Fayetteville Code of Ordinances Chapter 96: Parks and Recreation, Section 97.088 Signs Prohibited to permit donor recognition signs to be locatd in parks and trails.

Cost of this request	$ - Category / Project Budget	Program Category / Project Name
Account Number	$ - Funds Used to Date	Program / Project Category Name
Project Number	$ - Remaining Balance	Fund Name

Budgeted Item ☐ **Budget Adjustment Attached** ☐

Connie Edmonston — Department Director — Date

Kim M — City Attorney — May 28, 2010 — Date

Paul A. Becker — Finance and Internal Services Director — 5-28-2010 — Date

Don Mac — Chief of Staff — 5-28-10 — Date

Lioneld Jordan — Mayor — 6/1/10 — Date

Previous Ordinance or Resolution # _____

Original Contract Date: _____

Original Contract Number: _____

Received in City Clerk's Office — ENTERED 5/28/10 — Kim M

Received in Mayor's Office — ENTERED 5/28/10

Comments:

Revised January 15, 2009

Left on the Second Reading at the 6-15-10 CC Mtg.

Fayetteville ARKANSAS
www.accessfayetteville.org

THE CITY OF FAYETTEVILLE, ARKANSAS
DEPARTMENT CORRESPONDENCE

CITY COUNCIL AGENDA MEMO

To: Mayor Lioneld Jordan and City Council

Thru: Don Marr, Chief of Staff
Connie Edmonston, Director of Parks and Recreation CE

From: Alison Jumper, Park Planning Superintendent aj

Date: May 27, 2010

Subject: Code of Ordinances Amendment for Chapter 96: Parks and Recreation

PROPOSAL:

As the City of Fayetteville grows, the need for diverse recreational opportunities grows. Seeking partnerships and donations from private organizations and businesses can enhance the City's ability to provide parks and recreation services for park improvement projects. Private partnerships with businesses and individuals offering services and products consistent with the Parks and Recreation mission have the potential to reduce the City's investment in capital projects. Park staff has recently recognized the need for an avenue allowing donor recognition signs on park and trail property. Donor recognition is vital to successfully soliciting and securing funding for projects. The use of corporate names and logos are often used in recognizing contributions; however, these types of signs are not currently permissible by city ordinance.

Chapter 97 of the Unified Development Code (§97.088(B)) allows for signs on softball/baseball fences and scoreboards at locations and in sizes designated by the Parks and Recreation Director. Park staff proposes amending Chapter 97 to allow for donor recognition signs on park and trail property, thereby improving the ability to successfully secure funding from private sources.

RECOMMENDATION:

Parks Staff recommends approving and ordinance amending the Fayetteville Code of Ordinances Chapter 96: Parks and Recreation, Section 970.88 Signs Prohibited to permit donor recognition signs to be located in parks and trails.

BUDGET IMPACT:

This ordinance amendment would not impact the budget negatively. If approved, the potential for securing donations may increase, thereby positively impacting the budget.

FAYETTEVILLE

THE CITY OF FAYETTEVILLE, ARKANSAS

KIT WILLIAMS, CITY ATTORNEY
DAVID WHITAKER, ASST. CITY ATTORNEY

LEGAL DEPARTMENT

DEPARTMENTAL CORRESPONDENCE

TO: **Lioneld Jordan**, Mayor
City Council

FROM: **Kit Williams**, City Attorney

DATE: **May 28, 2010**

RE: **Authorizing Donor signs for city parks**

Chief of Staff Don Marr, Development Services Director Jeremy Pate and I reviewed and revised the Parks and Recreation Department's proposed amendment to the Parks and Recreation Chapter of the Fayetteville Code which would, for the first time, authorize donor signs to be displayed in City parks. We tried to strike a balance between recognizing (and attracting future major) donors while maintaining aesthetics and the noncommercial nature of all City parks.

Any facility to be named for a donor, volunteer or public servant would first have to be recommended by the Parks and Recreation Advisory Board and then approved by City Council resolution.

ORDINANCE NO. _____

AN ORDINANCE TO AMEND CHAPTER 97 **PARKS AND RECREATION** OF THE CODE OF FAYETTEVILLE TO PERMIT AND REGULATE SIGNS RECOGNIZING DONOR CONTRIBUTIONS

WHEREAS, fairly small, aesthetically pleasing signs to recognize significant donors to our parks can help to generate needed funds to facilitate park improvements.

NOW, THEREFORE BE IT ORDAINED BY THE CITY COUNCIL OF THE CITY OF FAYETTEVILLE, ARKANSAS:

Section 1: That the City Council of the City of Fayetteville, Arkansas hereby repeals §97.088 (B) of the Code of Fayetteville in its entirety and enacts a replacement §97.088 (B) *Exceptions* to clarify athletic field signage restrictions and to authorize and regulate donor recognition signs as shown below:

"(B) *Exceptions*.

(1) *Athletic Field Signage*. Signs shall be permitted on softball/baseball outfield fences and scoreboards at locations and in sizes designated by the Parks and Recreation Director. Uniform fees shall be charged dependent upon placement and size of the permitted signs. The content of the sign and whether it is commercial or non-commercial may not be considered. Designated spaces shall be sold at the established price on a first come basis. The owner of a sign at a designated location shall have first right to renew before others can purchase the size/location for a new or replacement sign.

(2) *Donor Recognition Signs*. Signs located in City parks or on City trails that are used for the purpose of memorializing a person or family through naming, recognition of significant donors, or recognition of contributions to the facility or amenity on which the sign is installed shall meet the following conditions:

(a) *Maximum Size and Number*. A total of two (2) donor recognition signs, for any one donor memorialized, are allowed at remote locations of the same park facility. Trail signage shall not exceed four (4) square feet per sign. Park signage shall not exceed sixteen (16) square feet per sign.

(b) *Design Parameters*. The size and location of the sign(s) shall be approved by the Planning Division based on the following criteria:

(i) Signage may include the name and/or logo of the sponsor, donor or contributor to the facility or amenity.

(ii) Signage may not include corporate slogans, colors or advertising associated with a particular company, organization or corporation.

(iii) The Parks and Recreation Department shall provide sign design and construction standards for each park facility that is to utilize donor recognition. The standards shall ensure that donor recognition signage is consistent in size and style throughout the facility.

(iv) All signage shall be of high quality and constructed of durable materials such as masonry, bronze or wood.

(c) *Facility Naming*. The naming of facilities is permitted so long as the donor or honoree has made a significant contribution to the City, the Facility or the Parks and Recreation Department in terms of financial donations, voluntarism or dedicated public service. Final naming of a facility shall be recommended by the Parks and Recreation Advisory Board with final approval by the City Council."

PASSED and **APPROVED** this 15th day of June, 2010.

APPROVED:

By: _____
LIONELD JORDAN, Mayor

ATTEST:

By: _____
SONDRA E. SMITH, City Clerk/Treasurer

CURRENT LAW

FAYETTEVILLE CODE OF ORDINANCES
TITLE IX GENERAL REGULATIONS

(Code 1965, ' ' 17A-24, 17A-26; Ord. No. 1594, 4-1-68; Code 1991, §97.082)

Cross reference(s)-- Penalty, ' 97.999, Sale and use of fireworks, ' 94.04(B).

97.083 Soliciting Alms

No person in a park shall solicit alms or contributions for any purpose, whether public or private.

(Code 1965, ' 17A-25; Ord. No. 1594, 4-1-68; Code 1991, §97.083)

Cross reference(s)-- Penalty, ' 97.999.

97.084 Entering Closed Areas

No person in a park shall enter an area posted as "Closed to the Public", nor shall any person use, or abet the use of, any area in violation of posted notices.

(Code 1965, ' 17A-27; Ord. No. 1594, 4-1-68; Code 1991, §97.084)

Cross reference(s)-- Penalty, ' 97.999.

97.085 Going Onto Ice

No person in a park shall go onto the ice on any of the waters except such areas as are designated as skating fields, and provided a safety signal is displayed.

(Code 1965, ' 17A-28; Ord. No. 1594, 4-1-68; Code 1991, §97.085)

Cross reference(s)-- Penalty, ' 97.999.

97.086 Vending And Peddling

No person in a park shall expose or offer for sale any article or thing, nor shall he station or place any stand, cart, or vehicle for the transportation, sale or display of any such article or thing. Exception is here made as to any regularly licensed concessionaire acting by and under the authority and regulation of the city and nonprofit groups on an annual basis.

(Code 1965, ' 17A-29; Ord. No. 1594, 4-1-68; Code 1991, §97.086)

Cross reference(s)-- Penalty, ' 97.999.

97.087 Advertising Prohibited

No person in a park shall announce, advertise, or call the public attention in any way to any article or service for sale or hire.

(Code 1965, ' 17A-30; Ord. No. 1594, 4-1-68; Code 1991, §97.087)

Cross reference(s)-- Penalty, ' 97.999.

97.088 Signs Prohibited

(A) No person in a park shall paste, glue, tack, or otherwise post any sign, placards, advertisement, or inscription whatsoever, nor shall any person erect or cause to be erected any sign whatsoever on any public lands or highways or roads adjacent to a park, except as set forth hereinbelow.

(B) Signs shall be permitted on softball/baseball fences and scoreboards at locations and in sizes designated by the Parks and Recreation Director. Uniform fees shall be charged dependent upon placement and size of the permitted signs. The content of the sign and whether it is commercial or non-commercial may not be considered. Designated spaces shall be sold at the established price on a first come basis. Owner of a sign at a designated location shall have first right to renew before others can purchase the size/location for a new or replacement sign.

Slightly Amended and Donor Signs Added

(Code 1965, ' 17A-31; Ord. No. 3677, ' 2, 3-2-93; Code 1991, §97.088)

Cross reference(s)-- Penalty, ' 97.999.

97.089–97.998 Reserved

97.999 Penalty

(A) Whoever violates any provision of this chapter for which no specific penalty is otherwise provided shall be fined not more than $500.00 or double that sum for each repetition of such offense, or violation; provided, no penalty shall be greater or less than the penalty provided for the same or a similar offense under the laws of the state. If the violation of the chapter is, in its nature, continuous in respect to time, the penalty for allowing the continuation thereof shall not exceed $250.00 for each day the same is unlawfully continued.

(B) Any person violating any provision of ' 97.070 shall be guilty of a misdemeanor and shall be punished by a fine of not more than $500.00.

(Code 1965, ' ' 1-5, 13-12; Ord. No. 2128, 7-15-75; Ord. No. 2274, 9-7-76; Ord. No. 2903, 3-1-83; Ord. No. 3164, 1-21-86; Ord. No. 3203, 8-5-86; Code 1991, §97.999)

AGENDA REQUEST

FOR: COUNCIL MEETING OF JUNE 15, 2010

FROM:

KIT WILLIAMS, CITY ATTORNEY

ORDINANCE OR RESOLUTION TITLE AND SUBJECT:

A Resolution To Approve A 15 Year Contract For Enhanced Water Service Between Fayetteville And Johnson

APPROVED FOR AGENDA:

Kit Williams, City Attorney — May 26, 2010 Date

David Jurgens, Utilities Director — 26 MAY 10 Date

Paul Becker, Financial Director — 5-26-2010 Date

Don Marr, Chief of Staff — 6-1-2010 Date

ENTERED 5/27/10

Lioneld Jordan, Mayor — 6/1/10 Date

ENTERED 5/27/10 Kim C.

Tabled to July 6, 2010 CC mtg.

FAYETTEVILLE

THE CITY OF FAYETTEVILLE, ARKANSAS

KIT WILLIAMS, CITY ATTORNEY
DAVID WHITAKER, ASST. CITY ATTORNEY

LEGAL DEPARTMENT

DEPARTMENTAL CORRESPONDENCE

TO: **Lioneld Jordan**, Mayor
City Council

CC: **Don Marr**, Chief of Staff
David Jurgens, Utilities Director

FROM: **Kit Williams**, City Attorney

DATE: **May 26, 2010**

RE: **15 Year Contract for Enhanced Water Service between Johnson and Fayetteville**

Fayetteville already has a contractual duty (with the Beaver Water District) to supply domestic water to its water service area which includes most of the City of Johnson south of Clear Creek. Supplying "domestic water" does not mean supplying "fire flow" water which requires substantially larger distribution mains, water storage or pumping. Utilities Director David Jurgens has informed the Water and Sewer Committee and City Council that our existing water mains and water distribution system have current capacity for "enhanced" water service within Johnson. The flow and pressure at some existing fire hydrants in Johnson may be sufficient to provide some fire fighting capability.

This contract intends to assure Johnson that Fayetteville will not purposefully degrade this enhanced flow and pressure although serving new customers and development may lower potential pressure and especially flow from a fire hydrant. Fayetteville does not assure Johnson that it will maintain the current enhanced water service nor expend resources for larger mains, new storage facilities or pumps to keep or

restore the current level of enhanced water service. Please read section (B) *Water services* in the water contract for a more precise description of what we are proposing in relation to "enhanced" water service.

This proposed contract was unanimously approved at the Water and Sewer Committee meeting on May 25th, but may need minor modifications before final approval by the City Council. Like the proposed Sewer Contract, this Enhanced Water Contract should be discussed, but then tabled at your June 15th meeting and then considered for passage at your July 6th meeting when David Jurgens can answer any of your questions. Please see my memo with the Sewer Contract for further information.

RESOLUTION NO. _____

A RESOLUTION TO APPROVE A 15 YEAR CONTRACT FOR ENHANCED WATER SERVICE BETWEEN FAYETTEVILLE AND JOHNSON

WHEREAS, Fayetteville owns and operates a public water system consisting of water mains, some of which are located within the corporate limits of the City of Johnson, Arkansas, and water storage facilities and pumps with sufficient capacity to treat current and foreseeable water flows needed for its corporate city limits as well as Johnson, and other out-of-town customers; and

WHEREAS, Fayetteville has provided water service to customers in Johnson for many years, and has now been requested by the City of Johnson to provide enhanced water service for its citizens within the Fayetteville water service area; and

WHEREAS, Johnson and Fayetteville desire to enter into an agreement whereby Fayetteville will provide access to enhanced water service on an individual basis to its water mains for customers in the City of Johnson who are within Fayetteville's water service area; and,

WHEREAS, all new customers of the Fayetteville water service and public water and treatment system are responsible to pay the system wide water and wastewater impact fee to ensure new development that increases demand upon the water and wastewater system will bear its proportionate share of necessary improvements caused by increasing demand; and

WHEREAS, it is to the mutual advantage of Johnson and Fayetteville and their citizens to enter into an agreement for Fayetteville to own, operate and maintain a water distribution system within Fayetteville's water service areas of the City of Johnson freely utilizing street and alley rights of way and easements to provide enhanced water service where feasible and practical to Johnson citizens and thereby protecting the public health and maintaining the quality of life desired by citizens of Johnson; and

WHEREAS, the cities and their citizens will be benefitted by establishing a procedure and framework for future expansion and improvements to Fayetteville's water system in the City of Johnson.

Section 1: That the City Council of the City of Fayetteville, Arkansas hereby approves the fifteen year Contract For Enhanced Water Service between the cities of Johnson and Fayetteville attached as Exhibit A and authorizes Mayor Jordan to execute this Contract upon its approval by the Johnson City Council and signature by Mayor Lonnie Barron and the approval of all other pending contracts between Johnson and Fayetteville and the ordinance for the simultaneous detachment and annexation into Fayetteville of the agreed 99 acre parcel by the Johnson City Council and signature by Mayor Barron

PASSED and **APPROVED** this 6th day of July, 2010.

APPROVED:

By: _____
LIONELD JORDAN, Mayor

ATTEST:

By: _____
SONDRA E. SMITH, City Clerk/Treasurer

CONTRACT FOR ENHANCED WATER SERVICE BETWEEN THE CITIES OF JOHNSON, ARKANSAS AND FAYETTEVILLE, ARKANSAS

THIS CONTRACT is made and entered into this _____ day of July, 2010, by and between the City of Fayetteville, Arkansas, a municipal corporation, hereinafter referred to as "Fayetteville", and the City of Johnson, Arkansas, a municipal corporation, hereinafter referred to as "Johnson".

WHEREAS, Fayetteville owns and operates a public water system consisting of water mains, some of which are located within the corporate limits of the City of Johnson, Arkansas, and water storage facilities and pumps with sufficient capacity to treat current and foreseeable water flows needed for its corporate city limits as well as Johnson, and other out-of-town customers; and

WHEREAS, Fayetteville has provided water service to customers in Johnson for many years, and has now been requested by the City of Johnson to provide enhanced water service for its citizens within the Fayetteville water service area; and

WHEREAS, Johnson and Fayetteville desire to enter into an agreement whereby Fayetteville will provide access to enhanced water service on an individual basis to its water mains for customers in the City of Johnson who are within Fayetteville's water service area; and,

WHEREAS, all new customers of the Fayetteville water service and public water and treatment system are responsible to pay the system wide water and wastewater impact fee to ensure new development that increases demand upon the water and wastewater system will bear its proportionate share of necessary improvements caused by increasing demand; and

WHEREAS, it is to the mutual advantage of Johnson and Fayetteville and their citizens to enter into an agreement for Fayetteville to own, operate and maintain a water distribution system within Fayetteville's water service areas of the City of Johnson freely utilizing street and alley rights of way and easements to provide enhanced water service where feasible and practical to Johnson citizens and thereby protecting the public health and maintaining the quality of life desired by citizens of Johnson; and

WHEREAS, the cities and their citizens will be benefitted by establishing a procedure and framework for future expansion and improvements to Fayetteville's water system in the City of Johnson.

NOW, THEREFORE, THE CITY OF JOHNSON AND THE CITY OF FAYETTEVILLE AGREE AS FOLLOWS:

(1) ENHANCED WATER SERVICE PROVIDED TO JOHNSON CITIZENS AND BUSINESSES:

(A) *Water service area.*

The City of Fayetteville agrees to provide access to its enhanced water service facilities where feasible and practical to individual customers in Johnson who are located within Fayetteville's water service boundary area (shown on the attached map) as agreed by the Beaver Water District and the Cities of Fayetteville and Springdale. (This shall be referred to as the "water service area" hereinafter.) This water service area may be modified by future mutual agreement of Fayetteville and Springdale.

(B) *Water services.*

The City of Fayetteville agrees that it will maintain and service all water facilities within its water service area within Johnson in a reasonable manner with the aim of providing reasonably consistent water service similar to the water service enjoyed by Fayetteville's out-of-town customers. Although not previously required to do so, Fayetteville has supplied enhanced water service by providing water at sufficient flow and pressure to partially support fire hydrants in some places in Johnson within Fayetteville's water service area. Fayetteville will attempt (without having to build new water storage, larger mains or pumping stations in Johnson) to maintain adequate flow and pressure at these locations and may allow additional fire hydrant installation if an adequate flow and pressure is feasible and practical without additional cost to Fayetteville. Fayetteville is not responsible for any diminution in the enhanced flow and pressure caused by allowing the extension of water mains or water service lines to service new development or new customers. Fayetteville will not be required to increase the size of water mains, add pumping facilities or water tanks to maintain enhanced water service flow and pressure to the Johnson water service area. Fayetteville shall not be responsible nor liable for any damages or claims resulting from the interruption, discharge or failure of any part of the Fayetteville water system. If a scheduled interruption to water service in Johnson is necessary for system repair, maintenance, extension or rehabilitation, Fayetteville will attempt to notify the City of Johnson of such interruption prior to the commencement of the work. Fayetteville shall also attempt to notify affected Johnson customers similarly to how it attempts to notify its own citizens and other customers.

(C) *Effective date of this contract.*

This contract shall take effect and be in full force when approved by both city councils, signed by both mayors and after Johnson's ordinance detaching the 99 acre parcel has been approved by the Johnson City Council, approved and signed by Mayor Barron and the time for any legal challenges has expired or upon the final dismissal on the merits of such legal challenge.

(D) *Term of the contract.*

Fayetteville and Johnson agree that the term of this contract shall be fifteen (15) years. This contract may be renewed for another term of fifteen (15) years under the same terms and conditions upon the approval of both cities through city council resolutions.

(E) *Cooperation of the cities.*

Fayetteville and Johnson pledge to cooperate and work together to effectuate the goals and purposes of this contract for the benefit of their citizens.

(F) *Ownership of water mains and facilities; franchise and right to use rights-of-way and easements for water mains and facilities.*

Fayetteville shall continue to own and operate all water mains and facilities located within or serving the Johnson water service area. Johnson shall by ordinance grant Fayetteville a permanent franchise, free of charge but contingent upon Fayetteville providing water service to the Johnson water service area, so that Fayetteville has access to all street and alley rights-of-way, public easements, etc. for the use, maintenance, repair, replacement, and installation of water mains and water facilities necessary to properly serve the Johnson water service area and the Fayetteville Water Distribution System.

(G) *Water rates.*

Fayetteville shall supply water service through its distribution system and shall charge water customers located within Johnson's city limits according to the schedule of rates for customers located outside the corporate city limits of Fayetteville, Arkansas as established in the latest Fayetteville Ordinance prescribing water rates. Water rates may change periodically for both Fayetteville and out-of-town customers based upon a rate study and in accordance with state law. Fayetteville will notify Johnson of any public hearing for a water rate change before the Fayetteville City Council meeting in which a water rate increase is being proposed.

(H) *Water and Wastewater Impact Fees.*

Johnson agrees that the City of Fayetteville is empowered to charge its Water and Wastewater Impact Fees to new development customers in the Johnson water service area as Fayetteville does for new development in "all of the territory within the City's water and wastewater service areas ...." Unified Development Code of Fayetteville §159.02(A). Johnson agrees these impact fees may be changed by Fayetteville after following the procedures mandated by A.C.A. §14-56-103.

(I) *Billing and collection powers.*

Johnson agrees that Fayetteville may continue its meter reading, billing and collection procedures and operations, including discontinuing service to customers who fail to pay their bills, throughout all of its water service area within Johnson just as Fayetteville does throughout its entire water and wastewater service area.

(J) *Water service connections.*

All water customers of Fayetteville located within Johnson's water service area shall be required by Johnson to connect to the water distribution system in accordance with the rules and regulations as set out by the City of Fayetteville, the City of Johnson, the Arkansas Department of Health, the Arkansas Department of Environmental Quality, and the U. S. Environmental Protection Agency. The charges and requirements for water service connections shall be the same as for like service in the City of Fayetteville at the time the water service connections are made. Taps or connections to any and all water mains shall be made only by the Fayetteville Water and Water Department after Fayetteville has approved such taps. Johnson authorizes Fayetteville to make street cuts and openings where necessary to make new taps or connections. Fayetteville agrees to repair street cuts required in street crossings, street taps and/or repairs with materials equal to or better than the material and street condition prior to such street cut.

(K) *Plumbing.*

Johnson shall require each customer within the Johnson water service area to pay Fayetteville's current plumbing inspection fee and to install all plumbing in accordance with the then current ordinances, rules and regulations of the City of Fayetteville. All plumbing shall be inspected by inspectors of the Fayetteville Building Safety Division. Water service shall not be provided if the plumbing fails to meet the requirements of the applicable Fayetteville Code.

(L) *Ensuring viability of water valve boxes, fire hydrants, water meters and other water system components.*

Johnson agrees to ensure that water valve boxes, fire hydrants, water meters and other water system components are re-established to the proper elevation after all street widening, reconstruction or overlay projects permitted or constructed by the City of Johnson have been completed. Any water valve box, fire hydrant, water meter or other water system component repair or reconstruction must meet the City of Fayetteville's specifications and pass inspection by Fayetteville. Water valve boxes, fire hydrants, water meters and other water system components must be raised or lowered to grade within fifteen (15) days of being covered. Johnson agrees to hold Fayetteville harmless from any claims or cost incurred that are worsened by water valve boxes, fire hydrants, water meters and other water system components being covered by a City of Johnson street project. Any water valve boxes, fire hydrants, water meters and other water system components or any other water system components that have to be raised, moved, or otherwise changed as a result of work performed in any way by Johnson shall be at Johnson's expense.

(M) *Johnson to allow construction and operation of water distribution system by Fayetteville.*

Johnson agrees to adopt such ordinances, rules and regulations as will allow Fayetteville to construct, maintain and operate the water distribution system in accordance with the rules, regulations, or specifications of the Arkansas Department of Health, the Arkansas Department of Environmental Quality, the U.S. Environmental Protection Agency, and Fayetteville. Noncompliance with said rules, regulations or specifications by any customer may result in discontinuance of service to that customer. Fayetteville shall determine if such noncompliance has occurred. Johnson also agrees to adopt the necessary ordinances to provide Fayetteville with the necessary authority to implement any enforcement action of local, state and federal law or regulation.

(N) *Public health regulation compliance.*

Johnson agrees to ensure and require that all of its water customers within the water service area shall constantly comply with the ordinances, rules and regulations of Fayetteville, the U.S. Environmental Protection Agency, the Arkansas Department of Health, and the Arkansas Department of Environmental Quality governing public health and water operations and usage which may now exist or may hereinafter be promulgated. Failure or refusal of any customer to comply with such ordinances, rules or regulations will subject the customer to immediate discontinuance of water and water service and Fayetteville shall not be liable for any damages or expenses which might result from any discontinuance.

(O) *Discontinuance of water service.*

Fayetteville reserves the right to discontinue water service to individual customers without notice for any of the following reasons:

1. For fraudulent representation as to the condition of plumbing system as it relates to the protection and safety of Fayetteville's water or sewer system;
2. For improperly connected appliances and fixtures resulting in hazardous, potentially hazardous, or defective conditions;
3. For emergencies where damage to property, equipment or health may occur;
4. By order or request of the Arkansas Department of Health;
5. By order or request of the Arkansas Department of Environmental Quality;
6. If rules and regulations of the Arkansas Department of Health, or the U.S. Environmental Protection Agency relating to the safety and of the public water or sewer collection or treatment system are being neglected or violated;
7. If Ordinances of the City of Johnson or City of Fayetteville relating to the safety and protection of public water system are being neglected or violated; and
8. For failure to fully and timely pay water and sewer bills.

(P) *Taxes and fees prohibited.*

Johnson will not during the period of this contract or any renewal thereof, levy any franchise tax, occupation tax or any other tax of any form whatsoever nor assess any fee upon Fayetteville, the water distribution or the sewer systems operations called for by this contract. Nothing contained herein shall preclude the collection of any gross receipts tax (i.e. state, county or local sales tax) enacted in accordance with state law and not otherwise made exempt by state law.

(Q) *Developers extending water mains.*

Water mains to meet the needs of new development are primarily the responsibility of the developer and not the City of Fayetteville. Engineering, placement, size and construction of new water mains by a developer within the Johnson water service area must be inspected and approved by Fayetteville. The developer shall pay to

Fayetteville the normal system wide inspection and permit fee rate for these services by Fayetteville.

(R) *Obtaining necessary new public water/sewer easements.*

Johnson hereby grants to Fayetteville the right to construct, operate and own additional water facilities on or within the rights-of-way of dedicated public streets and alleys or within utility easements and other passageways. Fayetteville shall not construct or lay a water main across private property unless Johnson and/or the owners of such private property shall furnish to Fayetteville an executed easement by the owners of such property giving and granting to Fayetteville the right to construct, lay and maintain such water main across the private property. These easements shall be on forms as prescribed by Fayetteville. The form of such easements and their provisions or deeds shall show Fayetteville as the Grantee. In order to facilitate required improvements, Johnson agrees to cooperate with Fayetteville and assist in obtaining authority to cross private property with water mains. Johnson agrees to participate in any necessary eminent domain actions regarding property within the corporate limits of Johnson if Fayetteville so requests. Johnson further agrees it will not unreasonably impair, hinder or delay the obtaining of such easements or the construction of such required improvements. Johnson agrees that it will offer its full support to accomplish such improvements and obtain necessary easements.

(S) *Backflow prevention.*

Backflow prevention is necessary to protect the public water supply. Fayetteville shall be responsible for any determinations relating to which customers may need backflow prevention on their plumbing system. All such systems will be subject to Fayetteville's plan approval, inspection criteria, etc. Each customer that is required to install a backflow prevention assembly shall install and maintain the backflow assembly in accordance with the ordinances, rules and regulations of the City of Fayetteville

(T) *Water conservation.*

Johnson covenants and agrees that it will adopt an ordinance that provides enforcement of any necessary and mandatory water conservation measures proclaimed by the Mayor of Fayetteville that may become necessary due to an emergency resulting from limited supply of raw water, water treatment interruptions, failure of distribution system, pumping equipment, plant equipment, electrical facilities, or from any other source.

(U) *Fire hydrants.*

Without warranting their capacity to provide sufficient water for fire fighting, Fayetteville will allow the current fire hydrants connected to its distribution system within its water service area within Johnson to remain and will provide maintenance for those fire hydrants. Fayetteville will allow additional fire hydrants to be

placed within its water service area in Johnson where feasible and practical. Fayetteville will provide maintenance of these fire hydrants. Fayetteville will furnish unmetered (free) water service for the Johnson Fire Department at each fire hydrant **for emergency fire protection purposes only**. Non-emergency water from fire hydrants must be metered and shall be billed to the user. Fire hydrant meter installations must comply with the ordinances, rules and regulations of the City of Fayetteville. Fire hydrant meters can be obtained from the Fayetteville Meter Division.

(2) NOTICES:

Any written notices provided for herein shall be sufficient if hand-delivered or sent by certified mail, return receipt requested, postage prepaid, to the respective Mayor of the City.

(3) COMPLETE AGREEMENT:

It is agreed that neither city hereto is relying upon any oral or written information made by the other prior to the signing of this contract unless expressly provided herein, and that this contract constitutes the entire agreement between the City of Johnson and the City of Fayetteville and the contract shall not be hereafter amended or modified unless reduced to writing, approved by both City Councils and signed by the Mayors.

(4) SEVERABILITY:

If any phrase, clause, sentence or paragraph of this contract shall be declared invalid by the Judgment or decree of a court of competent jurisdiction, such invalidity shall not affect any of the remaining sentences or paragraphs of this contract and this contract shall remain in effect.

(5) SOVEREIGN IMMUNITY:

Nothing in this contract shall be construed to waive or limit the sovereign immunity enjoyed by both cities. Any provision that could be interpreted as a waiver or limitation of either city's sovereign immunity is expressly rejected and invalidated to the extent of such waiver or limitation. Nothing in this contract shall be construed as creating a partnership or joint venture between the City of Johnson and the City of Fayetteville for the provision of water services.

IN WITNESS WHEREOF, the Mayor and City Recorder/Treasurer of the City of Johnson, Arkansas, by authority of a resolution adopted by the City Council of the City of Johnson, Arkansas and the Mayor and City Clerk/Treasurer of the City of Fayetteville, Arkansas, by authority of a resolution adopted by the City Council of the City of Fayetteville, Arkansas, have hereunto set their hand and caused the corporation seal to be affixed and dated this the _____ day of July, 2010.

CITY OF JOHNSON, ARKANSAS

_____

MAYOR LONNIE BARRON

ATTEST:

_____

JENNIFER ALLEN
City Recorder/Treasurer

CITY OF FAYETTEVILLE, ARKANSAS

_____

MAYOR LIONELD JORDAN

ATTEST:

_____

SONDRA E. SMITH
City Clerk/Treasurer

AGENDA REQUEST

FOR: COUNCIL MEETING OF JUNE 15, 2010

FROM:

KIT WILLIAMS, CITY ATTORNEY

ORDINANCE OR RESOLUTION TITLE AND SUBJECT:

A Resolution To Approve A 15 Year Contract For Sanitary Sewer Service Between Fayetteville And Johnson

APPROVED FOR AGENDA:

Kit Williams, City Attorney — May 26, 2010 Date

David Jurgens, Utilities Director — 26 MAY 10 Date

Paul Becker, Financial Director — 26 MAY 2010 Date

Don Marr, Chief of Staff — 6-1-2010 Date

ENTERED 5/27/10

Lioneld Jordan, Mayor — 6/1/10 Date

ENTERED 5/27/10 Kim G.

Tabled to July 6, 2010 CC mtg.

FAYETTEVILLE

THE CITY OF FAYETTEVILLE, ARKANSAS

KIT WILLIAMS, CITY ATTORNEY
DAVID WHITAKER, ASST. CITY ATTORNEY

LEGAL DEPARTMENT

DEPARTMENTAL CORRESPONDENCE

TO: **Lioneld Jordan**, Mayor
City Council

CC: **Don Marr**, Chief of Staff
David Jurgens, Utilities Director

FROM: **Kit Williams**, City Attorney

DATE: **May 26, 2010**

RE: **Contract for Sanitary Sewer Service between the Cities of Johnson and Fayetteville**

A very important part of our agreement with Johnson for simultaneous detachment and annexation of the 99 acres parcel adjoining the north side of the Van Asche extension is a contract with Johnson to provide sewer service to its citizens and businesses within our water service area in Johnson. We are already supplying service to over a hundred Johnson customers, but this contract will make our sewer mains available to all residents and businesses within our water service area. Our water service area is a contractual commitment between Fayetteville and the Beaver Water District. It includes most of Johnson south of Clear Creek.

The Contract for Sanitary Sewer Service between the Cities of Johnson and Fayetteville was explained to the Sewer Committee by David Jurgens and me during their meeting after the Agenda Session on May 25, 2010. The Sewer Committee unanimously approved it and recommended it to the City Council. I will soon provide it to the Johnson City Attorney for what I hope is a quick, tentative approval. (Only our City Councils can give real, final approval.) There may be some minor adjustments needed. Any such changes will be explained and placed before you for approval before you as asked to approve the resolution.

David Jurgens, Utilities Director, has assured us that our sewer mains currently serving part of Johnson and our overall wastewater capacity are adequate to serve the entire remaining Fayetteville water service area within Johnson with

sanitary sewer service without significant additional expenditures by our current sewer customers.

Extension of sewer mains to reach new customers and development within our water service area in Johnson will be at the developer's cost just as it is with normal development within Fayetteville. It is the intent of the contract and both cities that Fayetteville will not be burdened by additional, new expenses (not paid for by sewer rates and impact fees) as a result of extending sewer service to our water service area within the City of Johnson. Sewer rates shall be those currently paid by Johnson citizens and businesses served with sewer by Fayetteville. Sewer rates can be raised by the Fayetteville City Council in the future to cover increasing costs.

This is one of several contracts that both Fayetteville and Johnson need to approve and have their mayors sign to complete the overall agreement regarding the detachment and annexation of the 99 acre parcel. I will soon provide to you the proposed Contract for Enhanced Water Service between Johnson and Fayetteville. The City Attorney of Johnson and I are working on an Agreement concerning maintaining the current Van Asche and Ball Streets as city streets (although the old Van Asche may be subject to vacation in the future); permitting Johnson emergency vehicles to run "hot" on Van Asche and Ball to reach parts of Johnson needing an emergency response; paying to the City of Johnson the $35,000.00 agreed to by the City Council in its Resolution as an offset of sales tax loss to Johnson for detaching and annexing a couple of active businesses into Fayetteville; and agreeing to cooperate and acquire necessary rights-of-way on the north side of Van Asche west of I-540. (This property is in Johnson).

Please discuss this sewer agreement at your June 15th meeting, but table it until your July 6th meeting to ensure plenty of advance notice to our citizens. David Jurgens will be out of the country on duty during the June 15th meeting, but will attend and can answer any questions and explain the details during the July 6th meeting. I am having knee replacement surgery a week before the July 6th meeting and so am not certain whether I will be able to attend.

RESOLUTION NO. _____

A RESOLUTION TO APPROVE A 15 YEAR CONTRACT FOR SANITARY SEWER SERVICE BETWEEN FAYETTEVILLE AND JOHNSON

WHEREAS, Fayetteville owns and operates a public sewerage system consisting of gravity mains, sewage lift stations and force mains, some of which are located within the corporate limits of the City of Johnson, Arkansas, and wastewater treatment facilities with sufficient capacity to treat current and foreseeable sewage flows generated in its corporate city limits as well as future sewage flows from Johnson, and other out-of-town customers; and

WHEREAS, Fayetteville has provided sewer service to customers in Johnson for many years, but had to refrain from providing service to new customers in Johnson until its new Westside Wastewater Facility could be completed; and

WHEREAS, Johnson and Fayetteville desire to enter into an agreement whereby Fayetteville will provide access on an individual basis to its sewer mains for customers in the City of Johnson who are within Fayetteville's water service area; and,

WHEREAS, all new customers of the Fayetteville public sewage and treatment system are responsible to pay the system wide sewer impact fee to ensure new development that increases demand upon the wastewater system will bear its proportionate share of necessary improvements caused by increasing demand; and

WHEREAS, it is to the mutual advantage of Johnson and Fayetteville and their citizens to enter into an agreement for Fayetteville to own, operate and maintain a public sewerage system within Fayetteville's water service areas of the City of Johnson freely utilizing street and alley rights of way and easements to provide sewer service to Johnson citizens and thereby protecting the public health and maintaining the quality of life desired by citizens of Johnson; and

WHEREAS, the cities and their citizens will be benefitted by establishing a procedure and framework for future expansion and improvements to Fayetteville's sanitary sewer system in the City of Johnson.

NOW, THEREFORE BE IT RESOLVED BY THE CITY COUNCIL OF THE CITY OF FAYETTEVILLE, ARKANSAS:

Section 1: That the City Council of the City of Fayetteville, Arkansas hereby approves the fifteen year Contract For Sanitary Sewer Service between the cities of Johnson and Fayetteville attached as Exhibit A and authorizes Mayor Jordan to execute this Contract upon its approval by the Johnson City Council and signature by Mayor Lonnie Barron and the approval of all other pending contracts between Johnson and Fayetteville and the ordinance for the simultaneous detachment and annexation into Fayetteville of the agreed 99 acre parcel by the Johnson City Council and signature by Mayor Barron

PASSED and **APPROVED** this 6th day of July, 2010.

APPROVED:

By: _____
LIONELD JORDAN, Mayor

ATTEST:

By: _____
SONDRA E. SMITH, City Clerk/Treasurer

CONTRACT FOR SANITARY SEWER SERVICE BETWEEN THE CITIES OF JOHNSON, ARKANSAS AND FAYETTEVILLE, ARKANSAS

THIS CONTRACT is made and entered into this _____ day of July, 2010, by and between the City of Fayetteville, Arkansas, a municipal corporation, hereinafter referred to as "Fayetteville", and the City of Johnson, Arkansas, a municipal corporation, hereinafter referred to as "Johnson".

WHEREAS, Fayetteville owns and operates a public sewerage system consisting of gravity mains, sewage lift stations and force mains, some of which are located within the corporate limits of the City of Johnson, Arkansas, and wastewater treatment facilities with sufficient capacity to treat current and foreseeable sewage flows generated in its corporate city limits as well as future sewage flows from Johnson, and other out-of-town customers; and

WHEREAS, Fayetteville has provided sewer service to customers in Johnson for many years, but had to refrain from providing service to new customers in Johnson until its new Westside Wastewater Facility could be completed; and

WHEREAS, Johnson and Fayetteville desire to enter into an agreement whereby Fayetteville will provide access on an individual basis to its sewer mains for customers in the City of Johnson who are within Fayetteville's water service area; and,

WHEREAS, all new customers of the Fayetteville public sewage and treatment system are responsible to pay the system wide sewer impact fee to ensure new development that increases demand upon the wastewater system will bear its proportionate share of necessary improvements caused by increasing demand; and

WHEREAS, it is to the mutual advantage of Johnson and Fayetteville and their citizens to enter into an agreement for Fayetteville to own, operate and maintain a public sewerage system within Fayetteville's water service areas of the City of Johnson freely utilizing street and alley rights of way and easements to provide sewer service to Johnson citizens and thereby protecting the public health and maintaining the quality of life desired by citizens of Johnson; and

WHEREAS, the cities and their citizens will be benefitted by establishing a procedure and framework for future expansion and improvements to Fayetteville's sanitary sewer system in the City of Johnson.

NOW, THEREFORE, THE CITY OF JOHNSON AND THE CITY OF FAYETTEVILLE AGREE AS FOLLOWS:

(1) SEWER SERVICE PROVIDED TO JOHNSON CITIZENS AND BUSINESSES:

(A) *Sewer service area.*

The City of Fayetteville agrees to provide access to its sewerage facilities to individual customers in Johnson who are located within Fayetteville's water service boundary area (shown on the attached map) as agreed by the Beaver Water District and the Cities of Fayetteville and Springdale. (This shall be referred to as the "sewer service area" hereinafter.) If this water service boundary area is modified by future mutual agreement of Fayetteville and Springdale, the sewer service area may be modified by the consent of Johnson and Fayetteville to match the modified water service area.

(B) *Sewer services.*

The City of Fayetteville agrees that it will maintain and service all sewer facilities within its sewer service area within Johnson in a reasonable manner with the aim of providing reasonably consistent sewer service similar to the sewer service enjoyed by all of Fayetteville's in-town and out-of-town customers. Fayetteville shall not be responsible nor liable for any damages or claims resulting from the interruption, discharge or failure of any part of the Fayetteville Wastewater Treatment (Sewerage) System. If scheduled interruptions to sewer service in Johnson are necessary for system repair, maintenance, extension or rehabilitation, Fayetteville will attempt to notify the City of Johnson of such interruption prior to the commencement of the work. Fayetteville shall also attempt to notify affected Johnson customers similarly to how it attempts to notify its own citizens and other customers.

(C) *Effective date of this contract.*

This contract shall take effect and be in full force when approved by both city councils, signed by both mayors and after Johnson's ordinance detaching the 99 acre parcel has been approved by the Johnson City Council, approved and signed by Mayor Barron and the time for any legal challenges has expired or upon the final dismissal on the merits of such legal challenge.

(D) *Term of the contract.*

Fayetteville and Johnson agree that the term of this contract shall be fifteen (15) years. This contract may be renewed for another term of fifteen (15) years under the same terms and conditions upon the approval of both cities through city council resolutions.

(E) *Cooperation of the cities.*

Fayetteville and Johnson pledge to cooperate and work together to effectuate the goals and purposes of this contract for the benefit of their citizens.

(F) *Ownership of sewer mains and facilities; franchise and right to use rights-of-way and easements for sewer mains and facilities.*

Fayetteville shall continue to own and operate all sewer mains and facilities located within or serving the Johnson sewer service area. Johnson shall by ordinance grant Fayetteville a permanent franchise, free of charge but contingent upon Fayetteville providing sewer service to the Johnson sewer service area, so that Fayetteville has access to all street and alley rights-of-way, public easements, etc. for the use, maintenance, repair, replacement, and installation of sewer mains and sewage facilities necessary to properly serve the Johnson sewer service area and the Fayetteville Wastewater System.

(G) *Sewer rates.*

Fayetteville shall supply sanitary sewer service through its collection system and shall charge sewer customers located within Johnson's city limits according to the schedule of rates for customers located outside the corporate city limits of Fayetteville, Arkansas as established in the latest Fayetteville Ordinance prescribing sewer rates. Sewer rates may change periodically for both Fayetteville and out-of-town customers based upon a rate study and in accordance with state law. Fayetteville will notify Johnson of any public hearing for a sewer rate change before the Fayetteville City Council meeting in which a sewer rate increase is being proposed.

(H) *Water and Wastewater Impact Fees.*

Johnson agrees that the City of Fayetteville is empowered to charge its Water and Wastewater Impact Fees to new development customers in the Johnson sewer service area as Fayetteville does for new development in "all of the territory within the City's water and wastewater service areas ...." Unified Development Code of Fayetteville §159.02(A). Johnson agrees these impact fees may be changed by Fayetteville after following the procedures mandated by A.C.A. §14-56-103.

(I) *Billing and collection powers.*

Johnson agrees that Fayetteville may continue its meter reading, billing and collection procedures and operations, including discontinuing service to customers who fail to pay their bills, throughout all of its sewer service area within Johnson just as Fayetteville does throughout its entire water and wastewater service area.

(J) *Sewer service connections.*

All water customers of Fayetteville located within Johnson's sewer service area shall be required by Johnson to connect to the sewer system in accordance with the rules and regulations as set out by the City of Fayetteville, the City of Johnson, the Arkansas Department of Health, the Arkansas Department of Environmental Quality, and the U. S. Environmental Protection Agency. The charges and requirements for sewer service connections shall be the same as for like service in the City of Fayetteville at the time the sewer service connections are made. Taps or connections to any and all sewer lines shall be made only by the Fayetteville Water and Sewer Department after Fayetteville has approved such taps. Johnson authorizes Fayetteville to make street cuts and openings where necessary to make new taps or connections. Fayetteville agrees to repair street cuts required in street crossings, street taps and/or repairs with materials equal to or better than the material and street condition prior to such street cut.

(K) *Plumbing.*

Johnson shall require each customer within the Johnson sewer service area to pay Fayetteville's current plumbing inspection fee and to install all plumbing in accordance with the then current ordinances, rules and regulations of the City of Fayetteville. All plumbing shall be inspected by inspectors of the Fayetteville Building Safety Division. Water service shall not be provided if the plumbing fails to meet the requirements of the applicable Fayetteville Code.

(L) *Ensuring viability of manholes.*

Johnson agrees to ensure that manholes are re-established to the proper elevation after all street widening, reconstruction or overlay projects permitted or constructed by the City of Johnson have been completed. Any manhole repair or reconstruction must meet the City of Fayetteville's specifications and pass inspection by Fayetteville. Manholes must be raised or lowered to grade within thirty (30) days of being covered. Johnson agrees to hold Fayetteville harmless from any claims or cost incurred that are worsened by manholes being covered by a City of Johnson street project. Any manholes or any other sewer system components that have to be raised, moved, or otherwise changed as a result of work performed in any way by Johnson shall be at Johnson's expense.

(M) *Johnson to allow construction and operation of sewer system by Fayetteville.*

Johnson agrees to adopt such ordinances, rules and regulations as will allow Fayetteville to construct, maintain and operate the sewage system in accordance with the rules, regulations, or specifications of the Arkansas Department of Health, the Arkansas Department of Environmental Quality, the U.S. Environmental Protection Agency, and Fayetteville. Noncompliance with said rules, regulations or specifications by any

customer may result in discontinuance of service to that customer. Fayetteville shall determine if such noncompliance has occurred. Johnson also agrees to adopt the necessary ordinances to provide Fayetteville with the necessary authority to implement any enforcement action of local, state and federal law or regulation.

(N) *Public health regulation compliance.*

Johnson agrees to ensure and require that all of its sewer customers within the sewer service area shall constantly comply with the ordinances, rules and regulations of Fayetteville, the U.S. Environmental Protection Agency, the Arkansas Department of Health, and the Arkansas Department of Environmental Quality governing public health and sewer operations and usage which may now exist or may hereinafter be promulgated. Failure or refusal of any customer to comply with such ordinances, rules or regulations will subject the customer to immediate discontinuance of water and sewer service and Fayetteville shall not be liable for any damages or expenses which might result from any discontinuance.

(O) *Discontinuance of sewer service.*

Discontinuance of sewer service is most commonly executed by a discontinuance of water service. Fayetteville reserves the right to discontinue sewer service to individual customers without notice for any of the following reasons:

1. For fraudulent representation as to the condition of plumbing system as it relates to the protection and safety of Fayetteville's sewer system;
2. For improperly connected appliances and fixtures resulting in hazardous, potentially hazardous, or defective conditions;
3. For emergencies where damage to property, equipment or health may occur;
4. By order or request of the Arkansas Department of Health;
5. By order or request of the Arkansas Department of Environmental Quality;
6. If rules and regulations of the Arkansas Department of Health, or the U.S. Environmental Protection Agency relating to the safety and of the public sewer collection or treatment system are being neglected or violated;
7. If Ordinances of the City of Johnson or City of Fayetteville relating to the safety and protection of public sewer system are being neglected or violated; and
8. For failure to fully and timely pay water and sewer bills.

(P) *Taxes and fees prohibited.*

Johnson will not during the period of this contract or any renewal thereof, levy any franchise tax, occupation tax or any other tax of any form whatsoever nor assess any fee upon Fayetteville, the sewer system or the operations called for by this contract. Nothing contained herein shall preclude the collection of any gross receipts tax (i.e. state, county or local sales tax) enacted in accordance with state law and not otherwise made exempt by state law.

(Q) *Developers extending sewer mains.*

Sewer mains to meet the needs of new development are primarily the responsibility of the developer and not the City of Fayetteville. Engineering, placement, size and construction of new sewer mains by a developer within the Johnson sewer service area must be inspected and approved by Fayetteville. The developer shall pay to Fayetteville the normal system wide inspection and permit fee rate for these services by Fayetteville.

(R) *Obtaining necessary new public water/sewer easements.*

Johnson hereby grants to Fayetteville the right to construct, operate and own additional sewer facilities on or within the rights-of-way of dedicated public streets and alleys or within utility easements and other passageways. Fayetteville shall not construct or lay a sewer main across private property unless Johnson and/or the owners of such private property shall furnish to Fayetteville an executed easement by the owners of such property giving and granting to Fayetteville the right to construct, lay and maintain such sewer main across the private property. These easements shall be on forms as prescribed by Fayetteville. The form of such easements and their provisions or deeds shall show Fayetteville as the Grantee. In order to facilitate required improvements, Johnson agrees to cooperate with Fayetteville and assist in obtaining authority to cross private property with sewer mains. Johnson agrees to participate in any necessary eminent domain actions regarding property within the corporate limits of Johnson if Fayetteville so requests. Johnson further agrees it will not unreasonably impair, hinder or delay the obtaining of such easements or the construction of such required improvements. Johnson agrees that it will offer its full support to accomplish such improvements and obtain necessary easements.

(2) NOTICES:

Any written notices provided for herein shall be sufficient if hand-delivered or sent by certified mail, return receipt requested, postage prepaid, to the respective Mayor of the City.

(3) COMPLETE AGREEMENT:

It is agreed that neither city hereto is relying upon any oral or written information made by the other prior to the signing of this contract unless expressly provided herein, and that this contract constitutes the entire agreement between the City of Johnson and the City of Fayetteville and the contract shall not be hereafter amended or modified unless reduced to writing, approved by both City Councils and signed by the Mayors.

(4) SEVERABILITY:

If any phrase, clause, sentence or paragraph of this contract shall be declared invalid by the Judgment or decree of a court of competent jurisdiction, such invalidity shall not affect any of the remaining sentences or paragraphs of this contract and this contract shall remain in effect.

(5) SOVEREIGN IMMUNITY:

Nothing in this contract shall be construed to waive or limit the sovereign immunity enjoyed by both cities. Any provision that could be interpreted as a waiver or limitation of either city's sovereign immunity is expressly rejected and invalidated to the extent of such waiver or limitation. Nothing in this contract shall be construed as creating a partnership or joint venture between the City of Johnson and the City of Fayetteville for the provision of sewer services.

IN WITNESS WHEREOF, the Mayor and City Recorder/Treasurer of the City of Johnson, Arkansas, by authority of a resolution adopted by the City Council of the City of Johnson, Arkansas and the Mayor and City Clerk/Treasurer of the City of Fayetteville, Arkansas, by authority of a resolution adopted by the City Council of the City of Fayetteville, Arkansas, have hereunto set their hand and caused the corporation seal to be affixed and dated this the _____ day of July, 2010.

CITY OF JOHNSON, ARKANSAS

_____
MAYOR LONNIE BARRON

ATTEST:

_____
JENNIFER ALLEN
City Recorder/Treasurer

CITY OF FAYETTEVILLE, ARKANSAS

_____
MAYOR LIONELD JORDAN

ATTEST:

_____
SONDRA E. SMITH
City Clerk/Treasurer

City of Fayetteville Staff Review Form

City Council Agenda Items
and
Contracts, Leases or Agreements

7/6/2010
City Council Meeting Date
Agenda Items Only

Yolanda Fields	Community Services	Development Services
Submitted By	**Division**	**Department**

Action Required:

Public Hearing and Resolution to order the Raze and Removal of the unsafe structure located at 890 S. Washington Ave. (WC Parcel # 765-05717-000) and approval of a Budget Adjustment in the amount of $4,149.00

$ 4,149.00	$ -	
Cost of this request	Category / Project Budget	Program Category / Project Name
1010.6420.5315.04	$ -	Raze and Removal
Account Number	Funds Used to Date	Program / Project Category Name
	$ -	General Fund
Project Number	Remaining Balance	Fund Name

Budgeted Item [ ] **Budget Adjustment Attached** [x]

Department Director — 06.10.2010 Date

City Attorney — 6-11-10 Date

Finance and Internal Services Director — 6-14-2010 Date

Chief of Staff — 6-14-10 Date

Mayor — 6/15/10 Date

Previous Ordinance or Resolution # _____

Original Contract Date: _____

Original Contract Number: _____

Received in City Clerk's Office 06-10-10P03:56 RCVD

Received in Mayor's Office ENTERED 6/11/10 BRP

Comments: Staff recommends the Raze and Removal of the structure and approval of the budget adjustment.

CITY COUNCIL AGENDA MEMO

To: Mayor and City Council

Thru: Jeremy Pate, Development Services Department Director

From: Yolanda Fields, Community Services Director

Date: June 9, 2010

Subject: Raze and Removal of structure on 890 S. Washington Ave.

RECOMMENDATION

Staff recommends approval of the Resolution ordering the Razing and Removal of a dilapidated and unsafe structure located at 890 S. Washington Avenue. Staff also recommends approval of the budget adjustment in the amount of $4,149.00.

BACKGROUND

Service Request # 94715, Case # 11450: Code Compliance responded to a request from the Fire Marshal's Office concerning the structure located at 890 S. Washington Avenue. The structure appeared to be in violation of Subsection 173.09(A), Unsafe Buildings, of the City Code of Ordinances. The Chief Building Official inspected the property and determined that the structure was in violation of Subsection 173.09(A), Unsafe Buildings, of the City Code of Ordinances. Specifically, the Chief Building Official observed: extensive fire damage requiring extensive replacement of structural members as well as most of the roof.
On March 5, 2010, an Unsafe Building Notice of Violation was sent to the property owner, Roland and Betty Ramirez. On March 11, 2010, our office received the Certified Mail Receipt signed by the property owner. By ordinance, the property owner was given until April 11, 2010 to acquire a building permit or to raze and remove the structure.

DISCUSSION

This parcel contains a 1,196 square foot, one story wood frame single family dwelling. The structure is secured, but has deteriorated to a point where it is no longer safe. There is not a current building permit on this structure.

BUDGET IMPACT

Raze and Removal of the structure cost $4,149.00 if the property owner does not comply with the Raze and Removal order.

RESOLUTION NO. _____

A RESOLUTION ORDERING THE RAZING AND REMOVAL OF A DILAPIDATED AND UNSAFE STRUCTURE OWNED BY RONALD AND BETTY RAMIREZ LOCATED AT 890 S. WASHINGTON AVENUE IN THE CITY OF FAYETTEVILLE, ARKANSAS AND APPROVING A BUDGET ADJUSTMENT OF $4,149.00

WHEREAS, Ronald and Betty Ramirez are the record owners of the real property situated at 890 S. Washington Ave., City of Fayetteville, Washington County, Arkansas, more particularly described as follows:

WC Parcel Number 765-05717-000; and,

WHEREAS, the City Council has determined that the structure located on said property is dilapidated, unsightly, unsafe, and detrimental to the public welfare; and,

WHEREAS, Ronald and Betty Ramirez, having been properly served with a Violation Notice via Certified Mail, Return Receipt Requested, and given thirty (30) days to correct said violation, have refused to repair, or raze and remove said dilapidated, unsightly, and unsafe structure.

NOW, THEREFORE, BE IT RESOLVED BY THE CITY COUNCIL OF THE CITY OF FAYETTEVILLE, ARKANSAS:

Section 1: That, by the authority granted pursuant to A.C.A. §14-56-203, and in accordance with the provisions of Ordinance No. 3948 of 1996, Ronald and Betty Ramirez are hereby ordered to raze and remove forthwith, the dilapidated, unsightly, and unsafe structure located on the aforementioned real property. The manner of removing said structure shall be: dismantle by hand or bulldozer, and haul all debris to a landfill.

Section 2. That, if Ronald and Betty Ramirez do not comply with this order, the Mayor is hereby directed to cause the dilapidated, unsightly, and unsafe structure to be razed and removed; and a lien against the real property shall be granted and given the City, pursuant to A.C.A. §14-54-904, for the costs associated therewith.

Section 3. That the City Council of the City of Fayetteville, Arkansas hereby approves the attached budget adjustment, marked as Exhibit "A," in the amount of $4,149.00.

PASSED and **APPROVED** this 6th day of July, 2010.

APPROVED: ATTEST:

By: _____ By: _____

LIONELD JORDAN, Mayor **SONDRA E. SMITH**, City Clerk/Treasurer

City of Fayetteville, Arkansas
Budget Adjustment Form

Budget Year	Department: Operations Division: Community Resources Program: Code Compliance	Date Requested	Adjustment Number
2009		6/9/2010	

Project or Item Added/Increased:

$4149 added to the Raze and Removal Account in case of non-compliance to the Raze and Removal request

Project or Item Deleted/Reduced:

Justification of this Increase:

Funding is needed for the Raze and Removal of a structure located at 890 S Washington.

Justification of this Decrease:

Increase Budget

Account Name	Account Number				Amount	Project Number	
Raze And Removals	1010	6420	5315	04	4,149		

Decrease Budget

Account Name	Account Number				Amount	Project Number	
Use of Fund Balance	1010	0001	4999	99	4,149		

V.090403

	Date
Division Head	6/10/10
Budget Director	6/14/10
Department Director	06.10.2010
Finance Director	6-14-2010
Chief of Staff	6-14-10

Budget & Research Use Only

Type: A B C D E

Requested By: Rachel

General Ledger Date

Posted to General Ledger — Initial — Date

EXHIBIT
A

Code Compliance Program
Unsafe Building Violation Determination

Address / Location: 890 S. Washington Ave.

WC Parcel # 765-05717-000

I have determined that the structure above has become dilapidated, unsafe, unsanitary, or detrimental to the public welfare.

☒ *I recommend the raze and removal of the structure.*

☐ *I recommend securing the structure.*

Building Official
3 mar 10

Observations: Structure received extensive fire damage from recent fire. Structure would require extensive replacement of structural members as well as most of the roof.

I have determined that the structure above is not in violation of Subsection 173.09 (A) of the Fayetteville Code Of Ordinances.

Building Official

PLEASE RETURN THIS FORM TO CODE COMPLIANCE

Date Sent: March 1, 2010 *SR#* 94714

Date Received: 3/4/10 *Case#* 11450

Community Services Division Director

City of Fayetteville
113 West Mountain Street
Fayetteville, Arkansas 72701

Fayetteville
ARKANSAS

Office of Code Compliance
Phone 479-575-8260
Fax 479-444-3445

VIOLATION NOTICE

March 05, 2010

Owner ROLAND & BETTY RAMIREZ
890 S.WASHINGTON

FAYETTEVILLE, AR 72701

RE: Property @ 890 S WASHINGTON AVE, Fayetteville, AR

WC Parcel # 765-05717-000 **Case # 11450**

Dear Property Owner:

It appears that your property contains a violation of the Fayetteville Unified Development Ordinance. It is our goal to notify and assist property owners to correct violations of city ordinances before taking actual enforcement actions. **If you need clarification of this notice or advice on how to correct the problem, please call our office at .**

Suspected Violation That Needs Correction:

§173.09 Unsafe Buildings. No persons, partnership, corporation or association, hereinafter referred to as "owner", shall keep or maintain any house or building within the corporate limits of the City which has become dilapidated, unsafe, unsanitary, or detrimental to the public welfare.

How This Violation Can Be Voluntarily Corrected:

By making repairs as needed or razing the structure and remove all debris from the lot. A building permit may be required, based on review of the Building Safety Director.

Potential Penalties:
If this violation is not corrected within thirty (30) days from the service of this notice, you can be issued a Criminal Citation for the above violation and be summoned to appear in court. Our office can also suggest the structure be razed and removed. The costs shall be charged to the owner(s) of the property and the city shall have a lien against such property for such costs. If you disagree with our conclusion that your property contains a violation of our ordinances, you have the right to appeal to the appropriate City Board, Commission or City Council. Please see Chapter 155 of the Unified Development Code.

If the residence is owner occupied and meets certain income requirements, you may qualify for federal assistance under our Community Development Block Grant. For more information on this program, please call (479) 575-8270 or 575-8240.

Sincerely,

BRENT JOHNSON
Code Compliance Officer

Cc: file

SENDER: *COMPLETE THIS SECTION*

- Complete items 1, 2, and 3. Also complete item 4 if Restricted Delivery is desired.
- Print your name and address on the reverse so that we can return the card to you.
- Attach this card to the back of the mailpiece, or on the front if space permits.

1. Article Addressed to:

RONALD & BETTY RAMIREZ

890 S. WASHINGTON
FAYETTEVILLE, AR 72701

COMPLETE THIS SECTION ON DELIVERY

A. Signature
X Roland Ramirez ☐ Agent ☐ Addressee

B. Received by (*Printed Name*) C. Date of Delivery 3-11-10

D. Is delivery address different from item 1? ☐ Yes
If YES, enter delivery address below: ☐ No

3. Service Type
☒ Certified Mail ☐ Express Mail
☐ Registered ☐ Return Receipt for Merchandise
☐ Insured Mail ☐ C.O.D.

4. Restricted Delivery? (*Extra Fee*) ☐ Yes

2. Article Number (*Transfer from service label*) 7009 0960 0000 1961 0095

PS Form 3811, February 2004 Domestic Return Receipt 11450 B5 102595-02-M-1540

7009 0960 0000 1961 0095

U.S. Postal Service™
CERTIFIED MAIL™ RECEIPT
(Domestic Mail Only; No Insurance Coverage Provided)

For delivery information visit our website at www.usps.com®

OFFICIAL USE

Postage	$
Certified Fee	
Return Receipt Fee (Endorsement Required)	
Restricted Delivery Fee (Endorsement Required)	
Total Postage & Fees	$

Postmark Here

Sent To

Street, Apt. No.; or PO Box No.

City, State, ZIP+4

PS Form 3800, August 2006 See Reverse for Instructions

Record 1 of 1 Last Updated 06/08/10

Parcel Number: **765-05717-000** Prev. Parcel Number: **139360-000-00** Type: **RI**
Location: **890 S WASHINGTON AVE**
Owner Name: **RAMIREZ, ROLAND & BETTY**
Mailing Address: **890 S Washington Ave Fayetteville AR 72701-6657**
Lot: Block: S-T-R: **22-16-30**
Addition: **GLENWOOD PARK**
School District: **FAYETTEVILLE SCH, FAY** Tax District: **011**
City: **FAYETTEVILLE**
Legal: **LOTS 21-22 BLOCK 4**
Current Year A79 Credit Status: **O**

Last Appraised: **2007**	**Appraised Value**	**Taxable Value**
Land	**22,500**	**3,623**
Improvement	**38,150**	**6,663**
Total	**60,650**	**10,286**

Tax History

Year	Taxable Value	Ad Valorem Tax	Imp. Dist. Tax	Timber Tax	Voluntary Tax	A79 Credit	A79 Status	Net Total Tax	Total Tax Paid	Payment Status
2009	**9,796**	**$504.49**	**$0.00**	**$0.00**	**$0.00**	**$350.00**	**O**	**$154.49**	**$0.00**	
2008	**9,370**	**$482.56**	**$0.00**	**$0.00**	**$0.00**	**$350.00**	**O**	**$132.56**	**$132.56**	**PAID**
2007	**8,944**	**$461.51**	**$0.00**	**$0.00**	**$0.00**	**$350.00**	**O**	**$111.51**	**$111.51**	**PAID**
2006	**8,518**	**$448.90**	**$0.00**	**$0.00**	**$0.00**	**$300.00**	**O**	**$148.90**	**$148.90**	**PAID**
2005	**8,152**	**$429.61**	**$0.00**	**$0.00**	**$0.00**	**$300.00**	**O**	**$129.61**	**$129.61**	**PAID**
2004	**7,786**	**$403.78**	**$0.00**	**$0.00**	**$0.00**	**$300.00**	**O**	**$103.78**	**$103.78**	**PAID**
2003	**7,325**	**$387.93**	**$0.00**	**$0.00**	**$0.00**	**$300.00**	**O**	**$102.07**	**$102.07**	**PAID**
2002	**7,006**	**$364.03**	**$0.00**	**$0.00**	**$0.00**	**$300.00**	**O**	**$70.43**	**$70.43**	**PAID**
2001	**6,688**	**$347.51**	**$0.00**	**$0.00**	**$0.00**	**$300.00**	**O**	**$52.26**	**$52.26**	**PAID**
2000	**6,370**	**$334.43**	**$0.00**	**$0.00**	**$0.00**	**$300.00**	**O**	**$34.43**	**$34.43**	**PAID**
1999	**6,370**	**$326.14**	**$0.00**	**$0.00**	**$0.00**	**$0.00**		**$326.14**	**$326.14**	**PAID**
1998	**6,370**	**$326.78**	**$0.00**	**$0.00**	**$0.00**	**$0.00**		**$326.78**	**$326.78**	**PAID**
1997	**6,370**	**$326.78**	**$0.00**	**$0.00**	**$0.00**	**$0.00**		**$326.78**	**$326.78**	**PAID**

Available Tax Payment Receipt(s)

Year	Receipt #	Payment Date	Ad Valorem Tax	Imp. Dist. Tax	Timber Tax	Voluntary Tax	Penalty Tax	Payment
2008	**36675**	**08/25/2009**	**$132.56**	**$0.00**	**$0.00**	**$0.00**	**$0.00**	**$132.56**
2007	**57275**	**10/07/2008**	**$111.51**	**$0.00**	**$0.00**	**$0.00**	**$0.00**	**$111.51**
2006	**85484**	**9/17/2007**	**$148.90**	**$0.00**	**$0.00**	**$0.00**	**$0.00**	**$148.90**
2005	**103779**	**10/5/2006**	**$129.61**	**$0.00**	**$0.00**	**$0.00**	**$0.00**	**$129.61**
2004	**51254**	**6/24/2005**	**$103.78**	**$0.00**	**$0.00**	**$0.00**	**$0.00**	**$103.78**
2003	**17238**	**12/6/2004**	**$87.93**	**$0.00**	**$0.00**	**$0.00**	**$14.14**	**$102.07**
2002	**132922**	**11/12/2003**	**$64.03**	**$0.00**	**$0.00**	**$0.00**	**$6.40**	**$70.43**
2001	**118493**	**11/12/2002**	**$47.51**	**$0.00**	**$0.00**	**$0.00**	**$4.75**	**$52.26**
2000	**7761**	**10/12/2001**	**$34.43**	**$0.00**	**$0.00**	**$0.00**	**$0.00**	**$34.43**
1999	**4132**	**4/19/2000**	**$326.14**	**$0.00**	**$0.00**	**$0.00**	**$0.00**	**$326.14**
1998	**8005**	**6/9/1999**	**$326.78**	**$0.00**	**$0.00**	**$0.00**	**$0.00**	**$326.78**
1997	**9813**	**8/4/1998**	**$326.78**	**$0.00**	**$0.00**	**$0.00**	**$0.00**	**$326.78**

Deed History

Date	Deed Ref.	Grantee1	Grantee2	Deed Type	Sale Amount	Revenue Amount
8/11/2000	**2000-67546**	**RAMIREZ, ROLAND & BETTY**		**WD**	**37,000**	**122.10**
	LDS 2000-67546 WD REV $122.10 (37M)					
5/15/1995	**95-23678**	**ARNOLD, R. D. & WILLADEAN**		**WD**	**40,000**	**132.00**
10/20/1993	**93-62742**	**HENDRIX, JAMES & DEBORAH**	**890 SOUTH WASHINGTON**	**WD**	**15,000**	**49.50**
	95-23677 QCD, NO REV.					
10/27/1986	**1203-842**	**BROWN, DOROTHY**		**QC**	**0**	**0.00**
1/1/1985	**1117-240**	**BROWN, BILLY G. & DORTHY (CONT)**			**0**	**0.00**

Structure Number	Occupancy Type	Construction Type	First Floor Living Area	Total Living Area	Year Constructed	Basement Area
1	**SF**	**FS**	**1196**	**1196**	**1941**	

Grade	Condition	Exterior Wall	Fireplace	Year Remodeled	Effective Age
5	**A**	**VINYL**			**66**

Sketch:

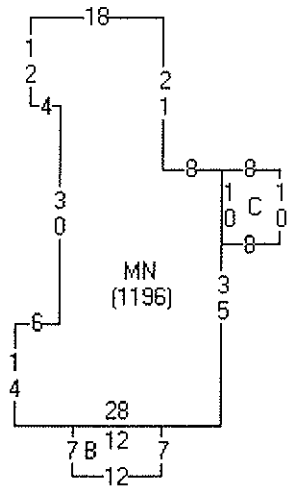

Out Buildings and Yard Improvements

Qty	Description	Size	Quality
1	**Gravel Driveway**		
1	**Outbuilding,frame**	**10x10**	

Next Item | Previous Item | Ledger Card | Prev. Ledger Card | Plat | GIS Parcel Map | Return to Search Results | Modify Search | New Search

City of Fayetteville
Code Compliance
113 West Mountain Street
Fayetteville, Arkansas 72701
Phone 479-575-8260

May 14, 2010

Roland and Betty Ramirez
890 S. Washington Ave.
Fayetteville, AR 72701-6657

COPY

RE: Enforcement of Fayetteville Code 173.09
Arkansas Code Ann. 14-56-203

NOTICE TO PROPERTY OWNERS

Pursuant to A.C.A. 14-56-203 at 173.09 of the Fayetteville Code, you are placed upon Notice that the Fayetteville City Council will conduct a public hearing to determine if the dwelling located at 890 S. Washington Ave. (Parcel #765-05717-000), should be Razed and Removed. You are free to appear at this hearing to present any evidence or statements. If you need additional information concerning this process or if you have information that we are not aware of, please call the Code Compliance Office at (479) 575-8260.

The hearing will be part of a regular City Council meeting on July 6, 2010 beginning at 6:00 p.m. at the City Administration Building, 113 W. Mountain St, Fayetteville, AR 72701. The City Council Meetings are advertised in local newspapers and will contain an item concerning this hearing. You may also call the Fayetteville City Clerk's Office (479-575-8323) for information confirming the date of the public hearing.

Sincerely,

Chad Ball
Community Services Coordinator

Cc: file

C. 1
Raze and Removal
890 S. Washington Ave.
Page 11 of 16

Fayetteville
ARKANSAS

THE CITY OF FAYETTEVILLE, ARKANSAS
113 WEST MOUNTAIN
FAYETTEVILLE, AR 72701-6083

Code Compliance

CERTIFIED MAIL™

7008 0500 0000 1643 8251

PITNEY BOWES
02 1R $ 05.54⁰
0006554588 MAY 14 2010
MAILED FROM ZIP CODE 72701

ROLAND & BETTY RAMIREZ

890 S WASHINGTON

RAMI890* 727 5C 1 N C 70 05/17/10
UNABLE TO FORWARD/FOR REVIEW
C001
NO FORWARDING ORDER ON FILE
RETURN TO POSTMASTER
OF ORIGINAL ADDRESSEE FOR REVIEW
BC: 72701 PM *2755-05872-14-38

72701@@@@@ C001
72701@@@@@

7008 0500 0000 1643 8251

U.S. Postal Service™
CERTIFIED MAIL™ RECEIPT
(Domestic Mail Only; No Insurance Coverage Provided)

For delivery information visit our website at www.usps.com®

OFFICIAL USE

Postage	$	5-13-10
Certified Fee		Postmark Here
Return Receipt Fee (Endorsement Required)		
Restricted Delivery Fee (Endorsement Required)		
Total Postage & Fees	$	

Sent To

Street, Apt. No.; or PO Box No. 11450

City, State, ZIP+4

PS Form 3800, August 2006 See Reverse for Instructions

03/01/2010

03/01/2010

03/01/2010

03/01/2010

03/05/2010

03/05/2010

04.12.2010

05.12.2010

AGENDA REQUEST

FOR: COUNCIL MEETING OF JULY 6, 2010

FROM:

LIONELD JORDAN, MAYOR

ORDINANCE OR RESOLUTION TITLE AND SUBJECT:

A Resolution To Approve An Agreement With The City Johnson Concerning Payment Of $35,000.00 To Johnson, Johnson Conveying .77 Acres To Fayetteville, The Cities Mutual Assistance In Obtaining Right-Of-Way For The Van Asche Extension, Budget Adjustment of $35,000.00 And Other Purposes

APPROVED FOR AGENDA:

Kit Williams, City Attorney — June 16, 2010 Date

Paul Becker, Finance Director — JUNE 16, 2010 Date

Don Marr, Chief of Staff — 6-21-10 Date

Lioneld Jordan, Mayor — 6/29/10 Date

ENTERED 6/17/10

06-16-10P05:00 RCVD Kim G.

FAYETTEVILLE

THE CITY OF FAYETTEVILLE, ARKANSAS

KIT WILLIAMS, CITY ATTORNEY
DAVID WHITAKER, ASST. CITY ATTORNEY

DEPARTMENTAL CORRESPONDENCE

LEGAL DEPARTMENT

TO: **City Council**

CC: **Lioneld Jordan**, Mayor
Don Marr, Chief of Staff
David Jurgens, Utilities Director
Greg Tabor, Police Chief
David Dayringer, Fire Chief
Chris Brown, City Engineer

FROM: **Kit Williams**, City Attorney

DATE: **June 16, 2010**

RE: **Final Agreement with Johnson**

Mayor Jordan and Chief of Staff Don Marr have approved and recommend your approval of the attached proposed Agreement with the City of Johnson which covers all of the items within the Resolution you passed to allow us to negotiate this final Agreement. The terms of this Agreement have been shared with Johnson City Attorney Danny Wright, Johnson Mayor Lonnie Barron and the Johnson City Council who have all expressed overall agreement to these terms.

I urge you to read this short (three page) agreement (especially the seven numbered paragraphs) and let Mayor Jordan, Chief of Staff Don Marr or me know if you have any questions, concerns or comments. We shall ask for you to approve the Resolution and this Agreement during your July 6th City Council meeting, prior to sending it to the Johnson City Council for their meeting on July 13th. However, please note paragraph 7. This Agreement (as well as both the water and sewer contracts) do not take effect until **after** the Johnson City Council's approval and Mayor

Barron's signature and posting, but also after the time for any referendum or appeal has run (30 days after signature and publication/posting).

WHAT DO WE AGREE TO DO?

(1) We agree to perform normal maintenance on the portions of Van Asche and Ball Street which will be within our city limits.

(2) Both cities agree to allow their emergency vehicles (police and fire) responding to an emergency to run "hot" where necessary along the other city's streets.

(3) We agree to pay $35,000.00 to Johnson to offset its sales tax loss from two businesses that will be annexed into Fayetteville.

(4) Johnson agrees to deed to us free of charge the .77 acre parcel it acquired when it was still contemplating trying to furnish sewer to this area. Most of this .77 acre parcel is within our needed right-of-way for the Van Asche extension, and we appreciate Johnson conveying this to us without charge.

(5) Johnson agrees to assist us (by filing and helping us prosecute a condemnation suit if necessary) to acquire any needed right-of-way and construction easements for the four lane section of Van Asche adjoining the City of Johnson (from Maguire to Highway 112).

(6) Fayetteville agrees to acquire all needed right-of-way and construction easements for Van Asche and to construct it "when adequate construction revenues are available and appropriated by the Fayetteville City Council for the Van Asche extension project."

(7) We agree not to annex any further property that was once in Johnson unless the Johnson City Council approves.

I hope to be able to make it to the July 6, 2010 City Council meeting to answer any questions. I want to thank Mayor Jordan for his leadership and guidance during this long and complicated negotiation. We believe our taxpayers' interests have been protected as much as possible by moving 99 acres of developable land into Fayetteville for future possible sales tax growth and by ensuring a good alignment of Van Asche into the Mall area to enhance transportation access for our citizens and customers into the commercial heart of Fayetteville.

The City of Johnson will likely be able to attract development further north of Van Asche and will certainly benefit from the sewer and enhanced water service its citizens and businesses will enjoy. We both help the environment and our dealings with the EPA by providing excellent waste water treatment for Johnson citizens rather than forcing them to use less efficient septic tank systems.

Finally the City of Fayetteville can continue its long history of being a good neighbor to the City of Johnson and promote continued cooperation which benefits all our citizens.

RESOLUTION NO. _____

A RESOLUTION TO APPROVE AN AGREEMENT WITH THE CITY OF JOHNSON CONCERNING PAYMENT OF $35,000.00 TO JOHNSON, JOHNSON CONVEYING .77 ACRES TO FAYETTEVILLE, THE CITIES MUTUAL ASSISTANCE IN OBTAINING RIGHT-OF-WAY FOR THE VAN ASCHE EXTENSION, BUDGET ADJUSTMENT OF $35,000.00 AND OTHER PURPOSES

WHEREAS, Fayetteville, on April 20, 2010, passed Ordinance No. 5317 calling for detachment of a tract of real estate from Johnson and simultaneous annexation of such tract into Fayetteville; and

WHEREAS, Johnson's Mayor and City Council have conducted a public meeting at 5:30 P.M. on Tuesday, June 8, 2010, on such detachment of the lands from Johnson; and

WHEREAS, the Johnson City Council has expressed its intent to pass an ordinance on July 13, 2010 concurring with Fayetteville Ordinance No. 5317 providing for the simultaneous detachment from Johnson and annexation into Fayetteville of the lands described in Exhibits to Fayetteville Ordinance No. 5317; and

WHEREAS, the tract being detached from Johnson contains a portion of South Ball Street and a portion of Van Asche Street which are public road links between parts of Johnson on the east and parts of Johnson on the west; and

WHEREAS, that public road link between the east and west parts of Johnson is frequently used by emergency vehicles to access both areas of Johnson; and

WHEREAS, that public road link requires periodic maintenance paid for or performed by Johnson up to the simultaneous detachment and annexation and thereafter by Fayetteville; and

WHEREAS, Fayetteville has agreed to not annex property in the future which property had previously been within Johnson's City limits unless Johnson consents to such annexation; and

WHEREAS, Fayetteville has agreed to pay to Johnson, following such simultaneous detachment and annexation, the sum of $35,000 to offset Johnson's loss of sales tax revenue for a few years from businesses in the described area; and

WHEREAS, the cities of Fayetteville and Johnson will both be benefited by a future improvement of Van Asche from Maguire Street to Ark. Hwy. 112.

NOW, THEREFORE BE IT RESOLVED BY THE CITY COUNCIL OF THE CITY OF FAYETTEVILLE, ARKANSAS:

Section 1: That the City Council of the City of Fayetteville, Arkansas hereby approves the attached Agreement with the City of Johnson and authorizes Mayor Jordan to sign this Agreement upon its approval by the Johnson City Council and signature by Mayor Lonnie Barron and the approval of all other pending contracts between Johnson and Fayetteville as well as the ordinance for the simultaneous detachment and annexation into Fayetteville of the agreed 99 acre parcel by the Johnson City Council and signature by Mayor Barron, and hereby approves the attached budget adjustment in the amount of $35,000.00.

PASSED and **APPROVED** this 6th day of July, 2010.

APPROVED:

By: _____
LIONELD JORDAN, Mayor

ATTEST:

By: _____
SONDRA E. SMITH, City Clerk/Treasurer

City of Fayetteville, Arkansas
Budget Adjustment Form

Budget Year	Department: General Government Division: Miscellaneous Program: Miscellaneous	Request Date	Adjustment Number
2010		7/6/2010	

JUSTIFICATION TO INCREASE PROJECT / ITEM:

To purchase .77 acres from the City of Johnson for the ROW for the Van Asche Extension.

JUSTIFICATION TO DECREASE PROJECT / ITEM (OR RECOGNIZING REVENUE):

Sufficient funding remains to comply with City policy.

Account Name	Account Number	Increase Budget	Decrease Budget	Project.Sub Number
Miscellaneous	1010.6600.5900.00	35,000		
Use of Fund Balance	1010.0001.4999.99		35,000	
	TOTAL	35,000	35,000	

Division Head — Date

Budget Director — Date 6-17-10

Department Director — Date

Finance Director — Date 6-17-2010

Chief of Staff — Date 6-21-10

Mayor — Date 6/22/10

Requested By: *kspringer*

Budget & Research Use Only

Type: A B C (D) E

Description: *0*

General Ledger Date

Posted to General Ledger — Initial — Date

Posted to Project Accounting — Initial — Date

AGREEMENT

Comes now the City of Fayetteville, Arkansas, acting by and through the Mayor and City Clerk as duly authorized by proper resolution of the City Council, hereinafter referred to as Fayetteville, and the City of Johnson, Arkansas, acting by and through the Mayor and Recorder-Treasurer as duly authorized by proper resolution of the City Council, hereinafter referred to as Johnson.

WHEREAS, Fayetteville, on April 20, 2010, passed Ordinance No. 5317 calling for detachment of a tract of real estate from Johnson and simultaneous annexation of such tract into Fayetteville.

WHEREAS, Johnson's Mayor and City Council have conducted a public meeting at 5:30 P.M. on Tuesday, June 8, 2010, on such detachment of the lands from Johnson.

WHEREAS, the Johnson City Council has expressed its intent to pass an ordinance on July 13, 2010 concurring with Fayetteville Ordinance No. 5317 providing for the simultaneous detachment from Johnson and annexation into Fayetteville of the lands described in Exhibits to Fayetteville Ordinance No. 5317.

WHEREAS, the tract being detached from Johnson contains a portion of South Ball Street and a portion of Van Asche Street which are public road links between parts of Johnson on the east and parts of Johnson on the west.

WHEREAS, that public road link between the east and west parts of Johnson is frequently used by emergency vehicles to access both areas of Johnson.

WHEREAS, that public road link requires periodic maintenance paid for or performed by Johnson up to the simultaneous detachment and annexation and thereafter by Fayetteville.

WHEREAS, Fayetteville has agreed to not annex property in the future which property had previously been within Johnson's City limits unless Johnson consents to such annexation.

WHEREAS, Fayetteville has agreed to pay to Johnson, following such simultaneous detachment and annexation, the sum of $35,000 to offset Johnson's loss of sales tax revenue for a few years from businesses in the described area.

WHEREAS, the cities of Fayetteville and Johnson will both be benefited by a future improvement of Van Asche from Maguire Street to Ark. Hwy. 112.

For And In Consideration Of The Foregoing And The Mutual Covenants Hereinafter Set Forth,

FAYETTEVILLE AND JOHNSON HEREBY AGREE AS FOLLOWS:

1. Fayetteville agrees to maintain as normal city streets with standard city maintenance those portions of South Ball Street and Van Asche Street located in the area depicted on Exhibit A hereto and described on Exhibit B hereto consisting of approximately 99 acres, more or less, after their annexation into Fayetteville. South Ball Street and Van Asche Street will not be allowed to be vacated unless all statutory requirements for street vacations are met to include adequate public access or alternative city streets are provided for persons who are relying upon those streets to access their property or business.

2. Fayetteville agrees to permit official emergency vehicles of the City of Johnson operated by Johnson law enforcement or fire department personnel to travel the portions of South Ball Street and Van Asche Street in the area described on Exhibit A hereto and depicted on Exhibit B hereto, or a "to be designed and built extension of Van Asche Street from Gregg to Maguire (or Ark. Hwy 112)", in emergency mode as required to protect persons and/or property in Johnson. Fayetteville also agrees that Johnson's emergency services responding to an emergency may travel in emergency mode upon Gregg Street north of Van Asche to the Johnson city limits. Further, Fayetteville agrees that if it requests emergency services from Johnson to assist in an emergency in Fayetteville, the Johnson emergency services (police and fire) may proceed to the site of the emergency in Fayetteville in emergency mode. Johnson agrees that if it requests emergency services from Fayetteville to assist in an emergency in Johnson, the Fayetteville emergency services (police and fire) may proceed to the site of the emergency in Johnson in emergency mode. Further, Johnson agrees that if Fayetteville police or fire emergency vehicles need to use those portions of Wilkerson/Gregg and Joyce Boulevard located in Johnson to more quickly access an emergency in the Northwest Arkansas Mall area, Johnson consents to permit Fayetteville's official emergency vehicles to operate in emergency mode on those streets.

3. Within thirty (30) days of the effective date of this Agreement between Fayetteville and Johnson, Fayetteville will pay to Johnson the sum of $35,000 to offset lost sales tax revenues from businesses in the area being simultaneously detached and annexed.

4. Johnson agrees to cooperate with Fayetteville in the acquisition of needed right-of-way and construction easements to facilitate the construction of the enlarged and extended Van Asche Boulevard. Specifically, the City of Johnson agrees to convey by warranty deed free of charge to the City of Fayetteville the parcel of approximately .77 acres it obtained from McClinton. (The warranty deed is attached as Exhibit C.) The City of Johnson shall assist the City of Fayetteville (by participating as a condemning authority if necessary) for the acquisition of any and all right-of-way and temporary construction easements on the north side of Van Asche within the City of Johnson (between McGuire and Highway 112) that is needed to expand Van Asche Boulevard to a four lane road. The City of Fayetteville is responsible for the engineering, appraisal and acquisition costs for any and all such right-of-way and construction

easements. The City of Johnson agrees that it will file condemnation proceedings and provide without cost the services of Johnson City Attorney for any right-of-way or temporary construction easement acquisition condemnation proceedings involving property within Johnson that cannot be resolved out of court. The City of Fayetteville agrees to provide its City Attorney to prosecute or assist in such condemnation cases, pay all filing fees and other court costs, pay for expert witnesses (real estate appraiser, etc.) pay pre-trial discovery costs, and pay whatever civil judgment that might be rendered in the condemnation case. The City of Johnson's only obligations in the acquisition of needed right-of-way and construction easements in Johnson are to promptly file any such necessary condemnation case upon request of Fayetteville and to provide its City Attorney for any necessary condemnation trial.

5. Fayetteville agrees to be responsible for obtaining at its sole cost all of the right-of-way and temporary construction easement necessary to enlarge Van Asche into a four lane road including paying for needed right-of-way and temporary construction easements in Johnson. Fayetteville agrees that the engineering and construction of the Van Asche project is its ultimate financial responsibility (with possible help from federal and state sources, private landowners and developers, but not from the City of Johnson) when adequate construction revenues are available and appropriated by the Fayetteville City Council for the Van Asche extension project.

6. The City of Fayetteville agrees that it will not (in the future after the annexation of the 99 acre parcel) annex any further property from within the City of Johnson City Limits or that has been deannexed by the property owners from Johnson without the City of Johnson's express approval for the property's detachment and annexation into Fayetteville.

7. This agreement shall take effect and be in full force when approved by both city councils, signed by both mayors and after Johnson's ordinance detaching the 99 acre parcel has been approved by the Johnson City Council, approved and signed by Mayor Barron and the time for any legal challenges has expired or upon the final dismissal on the merits of such legal challenge.

IN AGREEMENT With All The Terms And Conditions Above And In Witness Of Our Approval, The Mayors Duly Authorized By Their City Councils Sign Below on this _____ day of July, 2010.

CITY OF FAYETTEVILLE, ARKANSAS

By: _____
MAYOR LIONELD JORDAN

ATTEST:

By: _____
SANDRA E. SMITH
City Clerk/Treasurer

CITY OF JOHNSON, ARKANSAS

By: _____
MAYOR LONNIE BARRON

ATTEST:

By: _____
JENNIFER ALLEN
Recorder/Treasurer

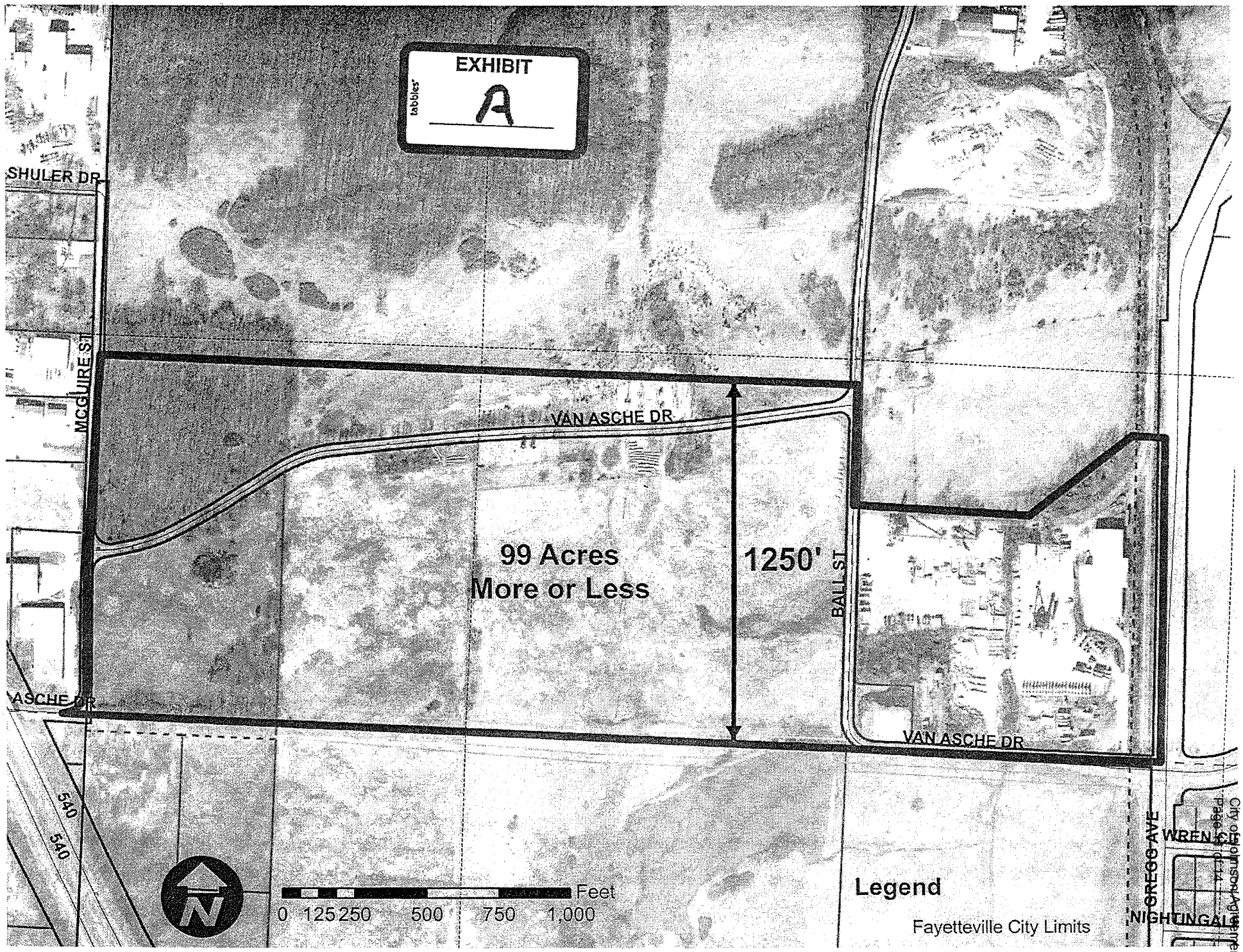
EXHIBIT
A
tabbies
SHULER DR
MCGUIRE ST
VAN ASCHE DR
99 Acres
More or Less
1250'
BALL ST
VAN ASCHE DR
ASCHE DR
540
540
CREGG AVE
WREN ST
NIGHTINGALE
Feet
0 125 250 500 750 1,000
Legend
Fayetteville City Limits

Exhibit B

The South 1250 feet of the Northwest Quarter of Section 27, Township 17 North, Range 30 West, Washington County, Arkansas.

Less and except that portion of South McGuire Street right-of-way lying within the above described lands.

And

A part of the Southwest Quarter (SW¼) of the Northeast Quarter (NE¼) of Section 27, Township 17 North Range 30 West, more particularly described as follows: Beginning at the Southwest Corner of said 40 Acre tract, and running thence North 832.92 feet along the West line of the NE 1/4; thence East 610.5 feet; thence North 50° 00' 00" East 448.8 feet to the west right-of-way line of the Arkansas & Missouri Railroad; thence East 75 feet to a point on the west right-of-way line of Gregg Ave; thence East 25 feet; thence South 01° 00' 00" East 1121.58 feet, more or less, to the South line of the NE¼ of Section 27, Township 17, Range 30; thence West 1073.88 feet along the South line of NE¼, more or less, to the point of beginning, containing a total of 99 acres, more or less.

WARRANTY DEED

BE IT KNOWN BY THESE PRESENTS:

THAT the **City of Johnson, Arkansas**, hereinafter called GRANTOR, for and in consideration of the sum of One Dollar ($1.00) and other good and valuable consideration, the receipt of which is hereby acknowledged, do hereby grant, bargain, sell and convey unto the **City of Fayetteville, Arkansas, a municipal corporation**, hereinafter called GRANTEE, and unto Grantee's successors and assigns, the following described land situated in the County of Washington, State of Arkansas, to-wit:

A tract of land being part of the W½ of the SW¼ of the NW¼ of Section 27 in Township 17 North, Range 30 West in the City of Johnson, Washington County, Arkansas, and being more particularly described as follows: Beginning at a found ½" rebar at the SW corner of the NW¼ of above said Section 27, Township 17 North, Range 30 West; thence along the West line of said Section 27 N 02° 30' 30" E a distance of 47.32 feet; thence leaving the West line of said Section 27 S 88° 16' 25" E a distance of 658.54 feet to the East line of the W½ of the SW¼ of the NW¼ of said Section 27 S 02° 29' 54" W a distance of 55.50 feet to the SE corner of the W½ of the SW¼ of the NW¼ of said Section 27; thence leaving the East line of the W¼ of the SW¼ of the NW¼ of said Section 27, along the South line of the NW¼ of said Section 27 N 87° 33' 44" W a distance of 658.49 feet to the Point of Beginning and containing 33,851 square feet or 0.77 acres, more or less. The above described property being subject to any and all easements or rights-of-way of record or fact.

(The above description is as put forth in the Order of Possession and Consent Judgment of Civil Action No. CIV 09-2572-5.)

TO HAVE AND TO HOLD the said lands and appurtenances hereunto belonging unto the said Grantee and Grantee's successors and assigns, forever. And the said Grantors, hereby covenant that they are lawfully seized of said lands and premises; that the same is unencumbered, and that the Grantors will forever warrant and defend the title to the said lands against all legal claims whatever.

WITNESS the execution hereof on this _____ day of _____, 2010.

City of Johnson, Arkansas

BY: _____

_____
[Please print or type Name and Title]

ATTEST:

_____

_____
[Please print or type Name and Title]

[SEAL]

ACKNOWLEDGMENT

STATE OF ARKANSAS)
) ss.
COUNTY OF WASHINGTON)

BE IT REMEMBERED, that on this date, before the undersigned, a duly commissioned and acting Notary Public within and for said County and State, personally appeared _____ and _____, to me well known as the persons who executed the foregoing document, and who stated and acknowledged that they are the ___ _____ and _____, respectively, of the **City of Johnson, Arkansas**, and are duly authorized in their respective capacities to execute the foregoing instrument for and in the name and behalf of said municipality, and further stated and acknowledged that they had so signed, executed and delivered said instrument for the consideration, uses and purposes therein mentioned and set forth.

WITNESS my hand and seal on this _____ day of _____, 2010.

MY COMMISSION EXPIRES:

_____

_____
Notary Public

City of Fayetteville Staff Review Form

City Council Agenda Items and Contracts, Leases or Agreements

07/06/2010
~~6/11/2010~~

City Council Meeting Date
Agenda Items Only

Leif Olson	Planning	Development Services
Submitted By	**Division**	**Department**

Action Required:

ADM 10-3532; (Arts Council Establishing Ordinance): Submitted by City Planning Staff. The request is to establish the Arts Council in the City of Fayetteville Code of Ordinances Title III Chapter 33: Departments, Boards, Commissions and Authorities .

	$ -	
Cost of this request	Category / Project Budget	Program Category / Project Name
	$ -	
Account Number	Funds Used to Date	Program / Project Category Name
	$ -	
Project Number	Remaining Balance	Fund Name

Budgeted Item ☐ **Budget Adjustment Attached** ☐

Department Director	06.11.2010 Date	Previous Ordinance or Resolution #
		Original Contract Date:
City Attorney	6-11-2010 Date	Original Contract Number:
Finance and Internal Services Director	6-11-2010 Date	Received in City Clerk's Office 06-11-10P02:31 RCVD Kim J.
Chief of Staff	6-14-10 Date	
Mayor	6/15/10 Date	Received in Mayor's Office ENTERED 6/14/10

Comments:

Fayetteville ARKANSAS
www.accessfayetteville.org

THE CITY OF FAYETTEVILLE, ARKANSAS
DEPARTMENT CORRESPONDENCE

CITY COUNCIL AGENDA MEMO

To: Mayor and City Council

Thru: Jeremy Pate, Development Services Director

From: Leif Olson, Associate Planner

Date: June 11, 2010

Subject: Fayetteville City Code Amendments – ADM 10-3532 Arts Council Establishing Ordinance

PROPOSAL:

The City Council passed Resolution 60-07 in April of 2007 forming the Fayetteville Arts Council. The Development Services Division is bringing forward a proposal to amend the Fayetteville Code of Ordinances Title III Chapter 33: Departments, Boards, Commissions and Authorities in order to form the Fayetteville Arts Council through an ordinance.

During the creation of the Fayetteville Arts Council (FAC) Strategic Plan the Arts Council requested that staff develop an establishing ordinance that would replace the existing resolution and codify the FAC as a City Board. At the February 2010 FAC meeting, staff presented a draft ordinance that the Arts Council supported. Staff then had the City Attorney prepare the proposed ordinance. The City Attorney suggested removing language that should be located in the FAC bylaws. The City Attorney's draft ordinance was reviewed by the Development Services Division, Parks and Recreation Division and City Administration and additional comments and changes were made. The final changes made to the ordinance include:

- Removal of language related to creation, membership and organization that should be located in the FAC bylaws.
- Inclusion of a process for administrative approval for public art donations valued at less than $5,000.
- Changing language in 33.342(A)(5) so that the FAC may, not shall, be involved with the planning of capital improvement projects.
- Addition of language giving a set time limit for the FAC to make a recommendation or approval of a public art project.
- Addition of an appeal process.

The Fayetteville Arts Council reviewed the proposed ordinance at its May 5, 2010 meeting and voted 5-0-0 in support of the draft ordinance.

RECOMMENDATION:

The Development Services Division recommends approval of this ordinance.

BUDGET IMPACT:

No budget impact.

ORDINANCE NO. _____

AN ORDINANCE TO AMEND CHAPTER 33 **DEPARTMENTS, BOARDS, COMMISSIONS AND AUTHORITIES** BY ENACTING TITLE XXI, **FAYETTEVILLE ARTS COUNCIL** INTO THE FAYETTEVILLE CODE

WHEREAS, the City of Fayetteville passed Resolution No. 60-07 creating the Fayetteville Arts Council on April 3rd, 2007; and

WHEREAS, the Fayetteville Arts Council wishes to be empowered by the Fayetteville City Council through this ordinance with the powers found in §33.342.

NOW, THEREFORE BE IT ORDAINED BY THE CITY COUNCIL OF THE CITY OF FAYETTEVILLE, ARKANSAS:

Section 1: That the City Council of the City of Fayetteville, Arkansas hereby codifies the Fayetteville Arts Council by enacting Article XXI **Arts Council** into the Fayetteville Code as shown below:

"**§33.340 Arts Council Established; Membership**

"(A) The establishment of the Fayetteville Arts Council by Resolution No. 60-07 is affirmed by this code section. The Arts council shall have nine members appointed by the City Council and serve three year staggered terms.

"(B) The members of the Fayetteville Arts Council shall be arts professionals or citizens of diverse backgrounds with strong links to the Fayetteville arts and cultural community. At least four members shall be artists working professionally in their field.

"33.341 Purpose

"The purpose of the Arts Council shall be to promote and to encourage the appreciation and enhancement of the arts and culture resources of Fayetteville. The continued vitality of the arts in the City of Fayetteville is a vital part of the future of the City as well as of its citizens. The arts are an important part of the cultural and economic life of the entire community of Fayetteville and enrich the participants in the arts as well as those who

observe them. Several organizations which exist in Fayetteville are active in the arts and provide leadership to the community on arts related matters. The Fayetteville Arts Council assists those organization and individuals.

"33.342 Powers and Duties

"(A) The Arts Council shall be specifically responsible for, but not limited to, the following:

> "(1) The Arts Council shall review all public art to be located on public property with a value greater than $5,000 that has been donated to the City of Fayetteville. Donated art located on public property valued less than $5,000 shall be approved by the City through an administrative review process.
>
> "(2) The Arts Council shall review all permanent public art that is to be located on City-owned property or right-of-way with a value greater than five thousand dollars ($5,000).
>
> "(3) The Arts Council may review temporary public art or public art that has a value of less than five thousand dollars ($5,000) and is to be located on City-owned property or right-of-way.
>
> "(4) The Arts Council may assist the City Council, the Fayetteville Parks and Recreation Advisory Board, Historic District Commission and the Planning Commission in using public art to enhance existing development.
>
> "(5) The Arts Council may be involved with the planning of capital improvement projects undertaken by the City where there is potential for aesthetic involvement and where the arts may be incorporated into the final design of the project. This may include streets, trails, structures and infrastructure improvements."

"33.343 Public Art Approval Process

"(A) The Arts Council within 30 days from the date on which a complete application is submitted to the City shall review and make a recommendation on the public art to be purchased by, or donated to, the City of Fayetteville. This process shall respect the diversity of art and give consideration to the efforts of a potential donor to the City."

"33.344 Appeal Process

"(A) An Alderman may bring an appeal of an Arts Council decision to the City Council for further review."

PASSED and **APPROVED** this _____day of _____, 2010.

APPROVED:

By: _____
LIONELD JORDAN, Mayor

ATTEST:

By: _____
SONDRA E. SMITH, City Clerk/Treasurer

Fayetteville ARKANSAS
www.accessfayetteville.org

THE CITY OF FAYETTEVILLE, ARKANSAS
CITY PLANNING DIVISION
125 West Mountain
Fayetteville, AR 72701
Phone (479) 444-3443

Fayetteville Arts Council Resolution vs. Ordinance

Purpose: The purpose statement is the same for the new ordinance.

Membership: The membership requirements are the same in the new ordinance.

Officers: This section was removed from the proposed ordinance, and will be adopted through FAC bylaws.

Meetings; Quorum; Voting: This section was removed from the proposed ordinance, and will be adopted through FAC bylaws.

Rules and Regulations. This section was removed from the proposed ordinance, and will be adopted through FAC bylaws.

Powers and Duties. This section has been changed for the proposed ordinance and it gives the FAC broader powers than those granted by the resolution.

Resolution		Ordinance
VII. Powers and Duties.		
A. The Fayetteville Arts Council shall review all offers of donation and provide a recommendation to the City Council.	Same	(A) The Arts Council shall be specifically responsible for, but not limited to, the following: "(1) The Arts Council shall review all public art to be located on public property that has been donated to the City of Fayetteville.
• *B. The Fayetteville Arts Council shall ensure the arts continue to be of value as an integral part of Fayetteville.*		
• *C. The Fayetteville Arts Council shall promote the arts in Fayetteville to enrich the lives of its citizens through education and demonstration.*		
D. The Fayetteville Arts Council may assist the City Council, the Fayetteville Parks and Recreation Advisory Board, Historic District Commission and the Planning Commission in using public art to enhance existing development in public parks and other public lands and in public structures.		**"(2) The Arts Council shall review all permanent public art that is to be located on City-owned property or right-of-way with a value greater than five thousand dollars ($5,000).** **"(3) The Arts Council may review temporary public art or public art that has a value of less than five thousand dollars ($5,000) and is to be located on City-owned property or right-of-way.**
	Same	"(4) The Arts Council may assist the City Council, the Fayetteville Parks and Recreation Advisory Board, Historic District Commission and the Planning Commission in using public art to enhance existing development.
E. The Fayetteville Arts Council **may** advise the Planning Commission, the Fayetteville Parks and Recreation Advisory Board, other City commissions and committees and City departments regarding artistic components of all municipal government projects under consideration by the City. The Council may also serve as a resource for artistic components of land use developments.	"may" to "shall"	"(5) The Arts Council **shall** be involved with the planning of capital improvement projects undertaken by the City where there is potential for aesthetic involvement and where the arts may be incorporated into the final design of the project. This may include streets, trails, structures and infrastructure improvements."
• *F. The Fayetteville Arts Council shall develop and recommend to the City Council policies and programs that would enhance and encourage the planning, placement and maintenance of public displays of art in location open to the public within the community.*		
• *G. The Fayetteville Arts Council shall encourage connections with other local, regional and national organizations working for the benefit of art and preservation of artistic values, and other similar activities.*		
• *H. The Fayetteville Arts Council shall recognize and encourage groups and organizations that enrich life by bringing cultural and artistic values and artifacts to the City.*		
• *I. The Fayetteville Arts Council shall pursue gifts and grants for support of arts programs and activities and the procurement of public art.*		

• *Included in the FAC Strategic Plan*

New

FAYETTEVILLE

THE CITY OF FAYETTEVILLE, ARKANSAS

KIT WILLIAMS, CITY ATTORNEY
DAVID WHITAKER, ASST. CITY ATTORNEY

DEPARTMENTAL CORRESPONDENCE

LEGAL DEPARTMENT

TO: **Leif Olson**, Strategic City Planner

FROM: **Kit Williams**, City Attorney

DATE: **March 8, 2010**

RE: **Fayetteville Arts Council**

I have rewritten the codification of the Arts Council with their requested powers exactly as you provided them to me. I did shorten their creation, member and organization verbiage to remove language that did not need to be specifically codified in their chapter. I left their purpose section virtually unchanged. Please provide this draft to the Arts Council.

The original Resolution No. 60-07 as well as the incorporated Bylaws, Rules and Procedures should be included in any City Council Agenda packet as the current official city position until changed by the City Council by this new ordinance.

ORDINANCE NO. _____

AN ORDINANCE TO AMEND CHAPTER 33 **DEPARTMENTS, BOARDS, COMMISSIONS AND AUTHORITIES** BY ENACTING TITLE XXI, **FAYETTEVILLE ARTS COUNCIL** INTO THE FAYETTEVILLE CODE

WHEREAS, the City of Fayetteville passed Resolution No. 60-07 creating the Fayetteville Arts Council on April 3rd, 2007; and

WHEREAS, the Fayetteville Arts Council wishes to be empowered by the Fayetteville City Council through this ordinance with the powers found in §33.342.

NOW, THEREFORE BE IT ORDAINED BY THE CITY COUNCIL OF THE CITY OF FAYETTEVILLE, ARKANSAS:

Section 1: That the City Council of the City of Fayetteville, Arkansas hereby codifies the Fayetteville Arts Council by enacting Article XXI **Arts Council** into the Fayetteville Code as shown below:

"§33.340 Arts Council Established; Membership

"(A) The establishment of the Fayetteville Arts Council by Resolution No. 60-07 is affirmed by this code section. The Arts council shall have nine members appointed by the City Council and serve three year staggered terms.

"(B) The members of the Fayetteville Arts Council shall be arts professionals or citizens of diverse backgrounds with strong links to the Fayetteville arts and cultural community. At least four members shall be artists working professionally in their field.

"33.341 Purpose

"The purpose of the Arts Council shall be to promote and to encourage the appreciation and enhancement of the arts and culture resources of Fayetteville. The continued vitality of the arts in the City of Fayetteville is a vital part of the future of the City as well as of its citizens. The arts are an important part of the cultural and economic life of the entire community of Fayetteville and enrich the participants in the arts as well as those who

observe them. Several organizations which exist in Fayetteville are active in the arts and provide leadership to the community on arts related matters. The Fayetteville Arts Council assists those organization and individuals.

"33.342 Powers and Duties

"(A) The Arts Council shall be specifically responsible for, but not limited to, the following:

"(1) The Arts Council shall review all public art located on public property that has been donated to the City of Fayetteville.

"(2) The Arts Council shall review all permanent public art that is to be located on City-owned property or right-of-way with a value greater than five thousand dollars ($5,000).

"(3) The Arts Council may review temporary public art or public art that has a value of less than five thousand dollars ($5,000) and is to be located on City-owned property or right-of-way.

"(4) The Arts Council may assist the City Council, the Fayetteville Parks and Recreation Advisory Board, Historic District Commission and the Planning Commission in using public art to enhance existing development.

"(5) The Arts Council shall be involved with the planning of capital improvement projects undertaken by the City where there is potential for aesthetic involvement and where the arts may be incorporated into the final design of the project. This may include streets, trails, structures and infrastructure improvements."

PASSED and **APPROVED** this 6th day of April, 2010.

APPROVED:

By: _____
LIONELD JORDAN, Mayor

ATTEST:

By: _____
SONDRA E. SMITH, City Clerk/Treasurer

City of Fayetteville
Staff Review Form
City Council Agenda Items
or
Contracts

July 6, 2010
City Council Meeting Date

Sarah Wrede	Engineering	Development Services
Submitted By	Division	Department

Action Required:

An ordinance to revise UDC Chapter 169 Physical Alteration of Land and Chapter 170 Stormwater Management, Drainage and Erosion Control

$ -	n/a	n/a
Cost of this request	Category / Project Budget	Program Category / Project Name
n/a	n/a	n/a
Account Number	Funds Used to Date	Program / Project Category Name
n/a	n/a	n/a
Project Number	Remaining Balance	Fund Name

Budgeted Item [X] Budget Adjustment Attached [ ]

Department Director	06.11.2010 Date	Previous Ordinance or Resolution #
City Attorney	6-22-10 Date	Original Contract Date: / Original Contract Number:
Finance and Internal Service Director	6-22-2010 Date	Received in City Clerk's Office 06-17-10P03:10 RCVD
Chief of Staff	6-23-10 Date	Received in Mayor's Office ENTERED 6/22/10
Mayor	6/23/10 Date	

Comments:

Fayetteville ARKANSAS
www.accessfayetteville.org

THE CITY OF FAYETTEVILLE, ARKANSAS
DEPARTMENT CORRESPONDENCE

CITY COUNCIL AGENDA MEMO

Council Meeting of July 6, 2010

To: Mayor and City Council

Thru: Don Marr, Chief of Staff
Jeremy Pate, Development Services Director
Chris Brown, City Engineer

From: Sarah Wrede, Staff Engineer

Date: June 10, 2010

Subject: **An ordinance to revise UDC Chapter 169 Physical Alteration of Land and Chapter 170 Stormwater Management, Drainage and Erosion Control**

PROPOSAL

City Engineering staff has prepared revisions to Chapters 169 and 170 of the City's Unified Development Code. The Proposed code changes will clarify stabilization requirements, require phased construction for sites larger than 20 acres, clarify re-vegetation requirements, clarify requirements for cut and fill slopes and retaining walls, define maintenance responsibility for stormwater management systems, restrict the location of dirt and topsoil storage and define stabilization practices for dirt and topsoil storage, define a qualified inspector for erosion and sediment control BMPs, and require site plans for 1&2 family residences to contain a plan for erosion and sediment control and final on-site drainage. A summary of the major points of revision for each chapter is attached along with the complete revised ordinance.

The proposed revisions are driven by the following four objectives:

- The Nutrient Reduction Plan, completed by the City based on the 2006 Agreement between the City and Beaver Water District, recommended certain revisions to Chapter 169 and 170 of the UDC.
- The City's Arkansas Department of Environmental Quality NPDES General Permit No. ARR040000 requires the City to be as strict as or stricter than the requirements of the Arkansas Department of Environmental Quality NPDES General Permit No. ARR150000 – Construction General Permit.
- The City's Arkansas Department of Environmental Quality NPDES General Permit No. ARR040000 requires post-construction stormwater management to minimize water quality impacts and ensure the long-term operation and maintenance of selected Best Management Practices.
- Staff seeks to address and plan for the drainage of residential lots before homes are constructed. Repairs to alleviate drainage problems can be costly to both the City and home owner.

These ordinance revisions were reviewed by the Planning Commission on May 10, 2010. The Planning Commission forwarded ADM 10-3571 to City Council with a recommendation for approval. Planning Commission meeting minutes are attached. In addition to review by the Planning Commission, the proposed revisions were posted on the City's website and were sent by email to Planning's development community

email list. No comments were received from the public or development community in response to the web posting or email.

RECOMMENDATION

Staff and Planning Commission recommend approval of revisions to UDC Chapter 169 Physical Alteration of Land and Chapter 170 Stormwater Management, Drainage and Erosion Control.

BUDGET IMPACT

The proposed ordinance amendments will cause no budget impact.

MINUTES OF A MEETING OF THE PLANNING COMMISSION

A regular meeting of the Fayetteville Planning Commission was held on May 10, 2010 at 5:30 p.m. in Room 219, City Administration Building in Fayetteville, Arkansas.

ITEMS DISCUSSED	**ACTION TAKEN**
Consent:	
MINUTES: April 26, 2010 Page 3	Approved
New Business:	
ADM 10-3561: (UDC AMENDMENT CH. 151 DEFINITIONS AND CH. 164 SUPPLEMENTARY DISTRICT REGULATIONS) Page 4	Forwarded
ADM 10-3567: (UDC AMENDMENT CH. 171 STREETS AND SIDEWALKS) Page 5	Tabled
ADM 10-3568: (UDC AMENDMENT CH. 177 LANDSCAPE REGULATIONS) Page 7	Forwarded
ADM 10-3571: (UDC AMENDMENT CH. 169 PHYSICAL ALTERATION OF LAND AND CH. 170 STORMWATER MANAGEMENT, DRAINAGE, AND EROSION CONTROL) Page 8	Forwarded
ADM 10-3559: (WEIR ROAD EXTENSION) RECONSIDERATION Page 9	Approved

ADM 10-3571: Administrative Item (UDC AMENDMENT CH. 169 PHYSICAL ALTERATION OF LAND AND CH. 170 STORMWATER MANAGEMENT, DRAINAGE AND EROSION CONTROL): Submitted by CITY ENGINEERING STAFF for revisions to Fayetteville Unified Development Code, Chapter 169 Physical Alteration of Land and Chapter 170 Stormwater Management, Drainage and Erosion Control. The proposed code changes will clarify stabilization requirements, require phased construction for sites larger than 20 acres, clarify re-vegetation requirements, clarify requirements for cut and fill slopes and retaining walls, define maintenance responsibility for stormwater management systems, restrict the location of dirt and topsoil storage and define stabilization practices for dirt and topsoil storage, define a qualified inspector for erosion and sediment control BMPs, and require site plans for 1- and 2-family residences to contain a plan for erosion and sediment control and final on-site drainage.

Sarah Wrede, Floodplain Administrator gave the staff report.

Public comment

Brian Teague, Community by Design, believes that the ordinance will work hand in hand with the recently adopted LID and promotes compact urban design envisioned by City Plan 2025.

Garland Hill asked why the ordinance is limited to 20 acres or larger.

Commissioner Cabe asked staff to address Mr. Hill's question

Glenn Newman, staff engineer, explained that the recommended size is related to sequencing phases.

Commissioner Hoskins and **Newman** discussed the issue and history of rear lot drainage for clarification and the issue of sediment in the street. Commissioner Hoskins stated that he does not support holding smaller development to the same standards as large developments.

Commissioner Chesser stated that the larger developments are held to a higher standard than the smaller developments and does not agree that they should be held to different standards.

Commissioner Cabe asked for clarification of the differences between the existing requirements and the new requirements.

Wrede explained that the code is intended to clarify the approved method of debris removal from the street in order to prevent sedimentary materials from reaching streams and that ADEQ regulate single-family construction when the lot is part of a larger development plan.

Commissioner Chesser and Newman discussed single-family residential safety railing requirements for clarification.

Motion:

Commissioner Kennedy made a motion to forward the item to the City Council with a recommendation of approval. **Commissioner Chesser** seconded the motion. **Upon roll call the motion to forward was approved with a vote of 6-1-0 with Commissioner Hoskins voting "no."**

Fayetteville
ARKANSAS
www.accessfayetteville.org

THE CITY OF FAYETTEVILLE, ARKANSAS
ENGINEERING DIVISION
125 West Mountain
Fayetteville, AR 72701
Phone (479) 444-3443

TO: Fayetteville City Council, meeting of July 6, 2010
FROM: Sarah Wrede, Staff Engineer
THRU: Jeremy Pate, Development Services Director
Chris Brown, City Engineer
DATE: May 4, 2010
RE: Summary of Proposed Revisions to CHAPTER 169: PHYSICAL ALTERATION OF LAND

Staff is proposing revisions throughout CHAPTER 169: PHYSICAL ALTERATION OF LAND. Please view the draft ordinance for complete revisions. The retaining wall diagrams on pages 9 and 10 have been completely revised. The major points of revision to CHAPTER 169: PHYSICAL ALTERATION OF LAND are summarized below:

Stabilization

- 169.04 Minimal Erosion Control Requirements, Section B

- **Existing to Remove**: *Stabilization*. All graded and otherwise disturbed areas shall be stabilized within 15 days immediately after the grading or disturbance has been completed. Stabilization methods such as baled straw, filter fabric, ditch checks, diversion ditches, brush barriers, sediment basins, matting, mulches, grasses and groundcover shall be used.

- **Replace With:** A record of the dates when grading activities occur, when construction activities temporarily or permanently cease on a portion of the site, and when stabilization measures are initiated shall be included in the erosion and sediment control plan. Except as provided in (1) and (2) below, stabilization measures shall be initiated as soon as practicable in portions of the site where construction activities have temporarily or permanently ceased, but in no case more than 14 days after the construction activity in that portion of the site has temporarily or permanently ceased.

  (1) Where the initiation of stabilization measures by the 14th day after construction activity temporarily or permanently ceases is precluded by snow cover, stabilization measures shall be initiated as soon as practicable.

  (2) Where construction activity will resume on a portion of the site within 21 days from when activities ceased, (e.g. the total time period that construction activity is temporarily ceased is less than 21 days) then stabilization measures do not have to be initiated on that portion of the site by the 14th day after construction activity temporarily ceased.

  Stabilization practices may include: temporary seeding, permanent seeding, mulching, geotextiles, sod stabilization, vegetative buffer strips, protection of trees, and preservation of mature vegetation and other appropriate measures.

  Reasons for revision: This is a recommendation from the Nutrient Reduction Plan and it conforms to the Arkansas Department of Environmental Quality NPDES General Permit No. ARR150000 – Construction General Permit. The "record of dates" will also allow the City's inspectors to more effectively enforce these requirements.

Debris, mud, and soil in public streets

- 169.04 Minimal Erosion Control Requirements, Section (F)

- **Existing to Remove**: *Removal of mud/dirt from public streets.* Any debris, soil, or mud from development sites reaching a public street shall be immediately removed.

- **Replace With:** *Debris, mud, and soil in public streets.* Debris, mud and soil shall not be allowed on public streets but if any debris, mud, or soil from development sites reaches the public street it shall be immediately removed via sweeping or other methods of physical removal. Debris, mud, or soil in the street may not be washed off the street or washed into the storm drainage system. Storm drainage systems downstream of a development site should be protected from debris, mud, or soil in the event that debris, mud, or soil reaches the drainage system.

- **Reasons for revision:** This revision expands and clarifies the City's requirements to comply with the Arkansas Department of Environmental Quality NPDES General Permit No. ARR150000 – Construction General Permit.

Phased Construction

- 169.06 Land Alteration Requirements, Section (F) (2)

- **New Language**: *Phased Construction.* The area of disturbance onsite at any one time shall be limited to 20 acres. An additional 20 acres (a maximum of 40 acres of disturbance at any one time) may be stripped with the permission of the City Engineer in order to balance cut and fill onsite. No additional area may be open without the permission of the City Engineer until the previously disturbed areas have been temporarily or permanently stabilized.

- **Reasons for revision:** This is a recommendation from the Nutrient Reduction Plan. This is not currently an ADEQ Construction General Permit requirement.

Top Soil

- 169.06 Land Alteration Requirements, Section (F) (3 and 5)

- **Existing to Remove**: T*op soil.* Top soil shall be stockpiled and protected for later use on areas requiring landscaping. If top soil or other soil is to be stockpiled for more than 30 days, a temporary cover of annual rye or other suitable grass shall be planted.

- **Replace With:** *Stockpiling of top soil.* Top soil shall be stockpiled and protected for later use on areas requiring landscaping. All storage piles of soil, dirt or other building materials (e.g. sand) shall be located more than 25 feet from a roadway, drainage channel or stream (from top of bank), wetland, and stormwater facility. The City Engineer may also require top soil stockpiles to be located up to fifty (50) feet from a drainage channel or stream, as measured from the top of the bank to the stockpile, for established TMDL water bodies; streams listed on the State 303(d) list; an Extraordinary Resource Water, Ecologically Sensitive Waterbody, and/or Natural and Scenic Waterbody, as defined by Arkansas Pollution Control and Ecology Commission Regulation No. 2; and/or any other uses at the discretion of the City Engineer.

  Topsoil piles surfaces must be immediately stabilized with appropriate stabilization measures. Stabilization practices may include: temporary seeding (i.e. annual rye or other suitable grass), mulching, and other appropriate measures. Sediment control measures such as silt fence shall be provided immediately for stockpiles and remain in place until other stabilization is in place. Storm drain inlets must be protected from potential sedimentation from storage piles by silt fence or other appropriate barriers.

  Re-vegetation. Re-vegetation shall be required to meet the following performance standards (sediment controls shall remain in place until re-vegetation is established) unless otherwise allowed by the City Engineer:

  (a) *Topsoil.* A minimum of 4 inches of topsoil shall be required to be either existing or installed in areas to be re-vegetated. Any application of topsoil and seeding under the drip line of a tree should be minimized to 3 inches so as not to damage the trees root system.

  (b) Zero to 10% grade: Re-vegetation shall be a minimum of seeding and mulching. Said seeding shall provide complete and uniform coverage that minimizes erosion and runoff in no more than two growing seasons.

(c) *10:1 up to 4:1 grade*: Re-vegetation shall be a minimum of hydro-seeding with mulch and fertilizer, sod, or groundcover. Said planting shall provide complete and uniform coverage in no more than two growing seasons.

(d) *4:1 to 3:1 grade*: The slope shall be covered with landscape fabric and hydro-seeded with mulch and fertilizer, or staked sod, or groundcover. Said planting shall provide complete and uniform coverage in no more than two growing seasons.

(e) *More than 3:1 grade*: Any finish grade over *3:* shall be stabilized with one or more of the following:
1) Retaining walls;
2) Cribbing with landscape fabric;
3) Terracing with groundcover;
4) Riprap;
5) Staked Sod (up to 2:1 slope)

If Cribbing, Terracing, or Riprap is used, the slope's stability and erodibility must be equivalent to or better than its predevelopment state.

- **Reasons for revision:** This is a recommendation from the Nutrient Reduction Plan and conforms with the Arkansas Department of Environmental Quality NPDES General Permit No. ARR150000 – Construction General Permit. The re-vegetation section is recommended by staff for clarification of existing policy.

Preliminary Plat Master Build-Out Grading Plan

- 169.07 Grading Plan Specifications, Section (A) (18)

- **New Language**: *Preliminary plat master build-out grading plan.* The applicant shall prepare a master grading plan to be followed during individual lot development to convey runoff to a public drainage easement or right of way. In addition to the requirements of 169.07 A, the following shall be required for individual lot drainage design:

  a. Identify lot lines and conceptual foot print of residence.

  b. Establish the minimum finish floor and grading adjacent to the residential structure in accordance with Chapter 173 Building Regulations and the Arkansas Fire Prevention Code.

  c. Indicate individual lot drainage with the use of spot elevations and flow arrows.

     i. The minimum slope of the flow path from the top of curb, top bank, or approved drainage inlet to the high point of the final graded lot shall be at a minimum of 2% for grassed surfaces.

     ii. In general, drainage should be routed on the shortest practicable flow path to the public right of way or drainage easement.

  d. Non structural grassed swales for rear lot drainage concentration is discouraged and shall not be installed in combination with a utility easement.

  e. Utility Easements shall be graded and shaped in accordance with the master build-out grading plan during preliminary plat construction.

     i. Provisions will be considered to accommodate positive drainage until build-out occurs.

- **Reasons for revision:** This section is recommended by staff in an effort to address and plan for the drainage of residential lots before homes are constructed after which repairs to alleviate drainage problems can be costly to both the City and home owner.

Submission of Stormwater Pollution Prevention Plan

- 169.08 Grading Plan Submittal, Section (C)
- **New Language**: A copy of the Stormwater Pollution Prevention Plan (SWPPP) is required to be submitted with the grading plan for sites one acre or larger.
- **Reasons for revision:** This recommendation conforms to the Arkansas Department of Environmental Quality NPDES General Permit No. ARR150000 – Construction General Permit.

Fayetteville
ARKANSAS
www.accessfayetteville.org

THE CITY OF FAYETTEVILLE, ARKANSAS
ENGINEERING DIVISION
125 West Mountain
Fayetteville, AR 72701
Phone (479) 444-3443

TO: Fayetteville City Council, meeting of July 6, 2010
FROM: Sarah Wrede, Staff Engineer
THRU: Jeremy Pate, Development Services Director
Chris Brown, City Engineer
DATE: May 4, 2010
RE: Summary of Proposed Revisions to CHAPTER 170: STORMWATER MANAGEMENT, DRAINAGE AND EROSION CONTROL

Staff is proposing revisions throughout CHAPTER 170: STORMWATER MANAGEMENT, DRAINAGE AND EROSION CONTROL. Please view the draft ordinance for complete revisions. The major points of revision to CHAPTER 170: STORMWATER MANAGEMENT, DRAINAGE AND EROSION CONTROL are summarized below:

Low Impact Development

- 170.07 Performance Criteria, Section (B) (3)
- **New Language**: *Low Impact Development.* Use of Low Impact Development design strategies, as described in Chapter 179, to attenuate lesser storms and more closely mimic predevelopment hydrology is encouraged.

Direct Discharge

- 170.07 Performance Criteria, Section (B) (4)
- **New Language**: *Direct Discharge.* Direct Discharge of a pipe into streams and/or floodways is not allowed. A stilling basin or other structure that will collect sediment, trash, etc and that will reduce the likelihood of erosion in the receiving stream due to discharge from the pipe shall be installed at pipe discharges into streams and/or floodways.
- **Reasons for revision**: This Best Management Practice supports the City's Arkansas Department of Environmental Quality NPDES General Permit No. ARR040000, Post-Construction Stormwater Management goal to minimize water quality impacts.

Maintenance Responsibility

- 170.08 Maintenance Responsibility, Sections (A – G)
- **New Language**: (A) *Dedication.* Those stormwater management systems approved in compliance with this chapter that will function as a part of the stormwater management conveyance system shall be dedicated to the city. All areas and/or structures to be dedicated to the city must be dedicated by plat or separate instrument and accepted by the City Engineer.

(B) *Perpetual Inspections and Maintenance Agreements.* The City shall require a Stormwater Management Practices Maintenance Agreement, for systems not dedicated to the City, of all entities for stormwater management conveyance systems and structures in the stormwater management plan for their proposed development. The City shall require the following set of documents and agreements prior to stormwater systems and structures approval:

(1) *Agreement of Maintenance Responsibility.* The owner of the property on which the stormwater systems structures have been installed shall agree to undergo ongoing inspections, and document maintenance and repair needs.

(2) *Agreement to Maintain Stormwater Systems and Structures.* The owner of the property on which stormwater systems and structures have been installed shall agree to maintain in good condition and promptly repair and restore all grade surfaces, walls, drains, dams and structures, vegetation, erosion and sedimentation controls, and other protective devices.

(C) *Approved Entities for Perpetual Maintenance Agreements.* All stormwater management structures or systems approved in compliance with this chapter but not dedicated to the City shall have adequate easements to permit the city to inspect and, if necessary to take corrective action should the responsible entity fail to properly maintain the system. Maintenance of all other stormwater management structures and systems approved in compliance with this chapter and not dedicated to the City shall be accomplished by the legal entity responsible for maintenance, which may include an approved entity as identified in the following:

(1) *Special districts and public entities.* An active water control district, drainage district, public utility, or a special assessment district;

(2) *Developer or property owner.* A developer or property owner who provides a Stormwater Management Practices Maintenance Agreement with the City; or,

(3) *Property owner association.* Property owner associations able to comply with the following provisions:

(a) The association provides a Stormwater Management Practices Maintenance Agreement through which it assumes full responsibility for stormwater management systems operation and maintenance.

(b) The association has sufficient powers to operate and maintain the stormwater management system, establish rules, assess members, contract for services, exist perpetually and, if dissolved, to provide alternative operation and maintenance services.

(D) *Maintenance Inspections.* All privately owned stormwater management facilities shall be inspected near the end of the first year of operation by the party designated in the Stormwater Management Practices Agreement. A subsequent inspection shall be performed at the end of the fourth year to ensure functionality and compliance. Inspection reports shall be submitted to and maintained by the City Engineer for all stormwater systems and structures. Inspection reports for stormwater systems and structures shall include:

(1) The date of the inspection;

(2) The name of the inspector;

(3) The condition of:

(a) Pretreatment devices.

(b) Vegetation or filter media

(c) Spillways, valves, or other control structures.

(d) Embankments, slopes or safety benches.

(e) Inlet and outlet channels and structures.

(f) Sediment and debris accumulation in storage and forebay areas.

(g) Underground drainage.

(h) Provide cross sectional data showing the existing capacity of the detention pond for comparison to the minimum designed capacity in the approved final drainage report. Cross sectional data shall be at the end of the fourth year. If the designed capacity is not available the owner shall reestablish the original approved volume in the final drainage report.

(i) Any other item that could affect the proper function of the stormwater structures or systems.

(4) Description of the needed maintenance.

(5) Description of maintenance activities undertaken.

After the 2nd Inspection Report is received, the City Engineer will make a determination whether subsequent Inspection Reports will be required to be submitted based upon the stabilization of the site and the condition of the stormwater systems.

(E) *Right-of-Entry for Inspection.* The Stormwater Management Maintenance Agreement shall provide for the City Engineer or designee to enter the property at reasonable times and in a reasonable manner for the purpose of inspecting stormwater systems and structures.

(F) *Failure to Maintain.* If a responsible person fails or refuses to meet the requirements of the inspection and maintenance agreement the City shall give written notice requesting corrective action. If the conditions described in the Failure to Maintain notice are not corrected within 10 days after such notice is given, the mayor, or his duly authorized representative, is hereby authorized to enter upon the property and do whatever is necessary to correct or remove the conditions described, in the notice. The costs of correcting said conditions shall be charged to the owner or owners of the property and the city shall have a lien against such property for such costs.

(1) *Enforcement of the Lien.* The lien herein provided for may be enforced and collected in either one of the following manners:

(a) The lien may be enforced at any time within 18 months after work has been done, by an action in circuit court; or

(b) The amount of the lien herein provided may be determined at a hearing before the City Council held after 30 days written notice by certified mail to the owner or owners of the property, if the name and whereabouts of the owner or owners be known, and if the name of the owner or owners cannot be determined, then only after publication of notice of such hearing in a newspaper having a bona fide circulation in Washington County for one insertion per week for four consecutive weeks; the determination of the City Council shall be subject to appeal by the property owner in circuit court; and the amount so determined at said hearing, plus ten percent penalty for collection, shall be by the City Council certified to the tax collector of the county, and by him placed on the tax books as delinquent taxes, and collected accordingly, and the amount, less three percent thereof, when so collected shall be paid to the city by the county tax collector.

(c) In case the owner of any lot or other real property is unknown or his whereabouts is not known or he is a nonresident of this state, then a copy of the written notice hereinabove referred to shall be posted upon the premises and before any action to enforce such lien shall be had, the City Clerk shall make an affidavit setting out the facts as to unknown address or whereabouts or non-residence, and thereupon service of the publication as now provided for by law against nonresident defendants may be had, and an attorney ad litem may be appointed to notify the defendant by registered letter addressed to his last known place of residence if same can be found.

(G) Removal and modification of Stormwater Systems and Structures. Stormwater systems and structures may only be modified or removed with the approval of the City Engineer, who shall determine the whether the stormwater system or structure does not function as a part of the stormwater management system. The applicant may be required to provide supporting data and calculations that justify the removal of the stormwater systems or structures.

- **Reasons for revision**: This section supports the City's Arkansas Department of Environmental Quality NPDES General Permit No. ARR040000, Post-Construction Stormwater Management requirement to ensure the long-term operation and maintenance of selected BMPs.

Dirt and Topsoil Storage

- 170.10 Stormwater Discharges From Construction Activities, Section (A) (9)

- **Existing to Remove:** *Dirt and Topsoil Storage*. All uncovered soil or dirt storage piles should be located more than 25 feet from a roadway or drainage channel. If these piles remain for 15 or more days, then their surfaces must be stabilized. If the piles will be in place for less than 15 days, then their perimeters must be surrounded by appropriately installed erosion control devices such as silt fences or straw bales. Dirt or soil storage piles located less than 25 feet from the road and in place for 15 or more days must be covered with tarps or other control. If the piles will be in place for less than 15 days, then their perimeters must be surrounded by silt fence or straw bales. Storm drain inlets must be protected from potential erosion from near-street storage piles by silt fence or other appropriate barriers.

- **Replace With:** *Dirt and Topsoil Storage*. All storage piles of soil, dirt or other building materials (e.g. sand) shall be located more than 25 feet from a roadway, drainage channel or stream (from top of bank), wetland, and stormwater facility. The City Engineer may also require storage piles to be located up to fifty (50) feet from a drainage channel or stream, as measured from the top of the bank to the stockpile, for established TMDL water

bodies; streams listed on the State 303(d) list; an Extraordinary Resource Water, Ecologically Sensitive Waterbody, and/or Natural and Scenic Waterbody, as defined by Arkansas Pollution Control and Ecology Commission Regulation No. 2; and/or any other uses at the discretion of the City Engineer.

Topsoil piles surfaces must be immediately stabilized with appropriate stabilization measures. Stabilization practices may include: temporary seeding (i.e. annual rye or other suitable grass), mulching, and other appropriate measures. Sediment control measures such as silt fence shall be provided immediately for stockpiles and remain in place until other stabilization is in place. Storm drain inlets must be protected from potential sedimentation from storage piles by silt fence or other appropriate barriers.

- **Reasons for revision:** This is a recommendation from the Nutrient Reduction Plan and conforms with the Arkansas Department of Environmental Quality NPDES General Permit No. ARR150000 – Construction General Permit.

Inspections

- 170.10 Stormwater Discharges From Construction Activities, Section (C) (1) (b)

- **Existing to Remove:** *Inspection.* The owner/developer/builder or their representative shall inspect all BMP's at least once every 14 days and within 24 hours after a rainfall of one half of an inch or more as measured at the site or generally reported in the Fayetteville area.

- **Replace With:** A qualified inspector (provided by the owner/developer/builder) shall inspect disturbed areas of the construction site and areas used for storage of materials that are exposed to precipitation that have been finally stabilized, and locations where vehicles enter or exit the site. BMPs must be observed to ensure proper operation. Inspectors must inspect for evidence of, or the potential for, pollutants entering the stormwater conveyance system. Discharge locations must be inspected to determine whether BMPs are effective in preventing significant impacts to waters of the State, where accessible. Where discharge locations are inaccessible, nearby downstream locations must be inspected to the extent that such inspections are practicable. The inspections must be conducted at least once every seven (7) calendar days and within 24 hours of the end of a storm that is 0.5 inches or greater as measured at the site or generally reported in the vicinity of the site. A rain gauge must be maintained on-site.

  A report shall be prepared for each inspection summarizing the scope of the inspection; name(s), title(s) and qualifications of personnel making the inspection; the date of the inspection; amount of rainfall and days since last rain event, BMPs on-site; observations relating to whether BMPs are in working order and whether maintenance is required (when scheduled and completed); the locations and dates when major construction activities begin, occur, or cease; and the signature of the inspector. The reports shall be retained as part of the stormwater pollution prevention plan for at least three (3) years from the date the site is finally stabilized and shall be made available upon request to the City.

- **Reasons for revision:** This is a recommendation from the Nutrient Reduction Plan and conforms with the Arkansas Department of Environmental Quality NPDES General Permit No. ARR150000 – Construction General Permit.

Preliminary Plat, Lot Requirements

- 170.11 Preliminary Plat, Lot Requirements, Sections (A – D)

- **New Language:** (A) Preliminary *Plats.* Preliminary Plats shall include a master drainage plan for each lot related to the proposed infrastructure and adjacent lots.

  (B) *Preliminary Plats for Residential Subdivisions.* Preliminary Plats for residential subdivisions shall provide detailed drainage information including flow arrows and design spot elevations including the proposed finish floor

elevation meeting the Arkansas Fire Prevention Code for building safety regulations for positive drainage of each lot.

(C) *Rear lot drainage easements.* Rear lot drainage easements for nonstructural grassed swales shall not overlap utility easements with above ground structures, ie, electric transformers, gas meters, communication junctions, etc.

(D) *Final Plat.* The Final Plat shall include the approved master drainage plan to be filed as a supplemental document. The scale shall be legible and approved by the City Engineer.

- **Reasons for revision:** This section is recommended by staff in an effort to address and plan for the drainage of residential lots before homes are constructed after which repairs to alleviate drainage problems can be costly to both the City and home owner.

1 & 2 Family Residential Requirements

- 170.12 1 & 2 Family Residential Requirements, Sections (A – C)

- **New Language:** (A) 1*&2 Family Residential and Sites under One Acre.* All residential lots must maintain properly installed erosion and sediment control measures from the beginning of construction until slope stabilization and/or vegetation is established in order to prevent silt and sediment from going offsite or into the street.

  (B) A building permit application shall contain sufficient site drainage information to determine whether the project complies with the requirements of this chapter.

  (C) If the Final Plat of the Subdivision, in which the proposed building is located, includes an approved master drainage plan, this plan shall be included in the building permit application and the individual lot drainage plan shall follow the master drainage plan.

- **Reasons for revision:** This section is recommended by staff in an effort to address and plan for the drainage of residential lots before homes are constructed after which repairs to alleviate drainage problems can be costly to both the City and home owner.

ORDINANCE NO. _____

AN ORDINANCE AMENDING CHAPTER 169: PHYSICAL ALTERATION OF LAND AND CHAPTER 170: STORMWATER MANAGEMENT, DRAINAGE AND EROSION CONTROL OF TITLE XV OF THE CODE OF FAYETTEVILLE (UNIFIED DEVELOPMENT CODE), TO CLARIFY STABILIZATION REQUIREMENTS, REQUIRE PHASED CONSTRUCTION FOR SITES LARGER THAN 20 ACRES, CLARIFY RE-VEGETATION REQUIREMENTS, CLARIFY REQUIREMENTS FOR CUT AND FILL SLOPES AND RETAINING WALLS, DEFINE MAINTENANCE RESPONSIBILITY FOR STORMWATER MANAGEMENT SYSTEMS, RESTRICT LOCATION OF DIRT AND TOPSOIL STORAGE AND DEFINE STABILIZATION PRACTICES FOR DIRT AND TOPSOIL STORAGE, DEFINE A QUALIFIED INSPECTOR FOR EROSION AND SEDIMENT CONTROL BEST MANAGEMENT PRACTICES, AND REQUIRE SITE PLANS FOR ONE AND TWO FAMILY RESIDENCES TO CONTAIN A PLAN FOR EROSION AND SEDIMENT CONTROL AND FINAL ON-SITE DRAINAGE

BE IT ORDAINED BY THE CITY COUNCIL OF THE CITY OF FAYETTEVILLE, ARKANSAS:

Section 1. That Chapter 169: Physical Alteration of Land of Title XV of the Code of Fayetteville (Unified Development Code), is hereby repealed, and Exhibit "A" attached hereto and made a part hereof, is inserted in its stead.

Section 2. That Chapter 170: Stormwater Management, Drainage, and Erosion Control, Title XV of the Code of Fayetteville (Unified Development Code), is hereby repealed, and Exhibit "B," attached hereto and made a part hereof, is inserted in its stead.

PASSED and **APPROVED** this 6th day of July, 2010.

APPROVED: ATTEST:

By: _____ By: _____

LIONELD JORDAN, Mayor **SONDRA E. SMITH**, City Clerk/Treasurer

TITLE XV UNIFIED DEVELOPMENT CODE
CHAPTER 169: PHYSICAL ALTERATION OF LAND

169.01 INTENT 3
169.02 GENERAL REQUIREMENTS 3
169.03 PERMITS REQUIRED/EXCEPTIONS 3
169.04 MINIMAL EROSION CONTROL REQUIREMENTS 4
169.05 ONE-TIME APPROVALS 5
169.06 LAND ALTERATION REQUIREMENTS 5
169.07 GRADING PLAN SPECIFICATIONS 11
169.08 GRADING PLAN SUBMITTAL 12
169.09 MINOR MODIFICATIONS 12
169.10 APPROVAL 12
169.11 DISCOVERY OF HISTORIC RESOURCES 12
169.12 CERTIFICATE OF OCCUPANCY 13
169.13 OWNER RESPONSIBILITY 13
169.14-169.99 RESERVED 13

DRAFT

EXHIBIT
A
tabbies

DRAFT

CHAPTER 169: PHYSICAL ALTERATION OF LAND

169.01 Intent

(A) It is the city's intent to safeguard the health, safety, and welfare of Fayetteville citizens by implementing standards and procedures for the physical alteration of land. It is not the city's intent to supersede federal or state regulations such as, but not limited to, the Occupational Health & Safety Act.

(B) The purpose of this chapter is to control grading, clearing, filling, and cutting (or similar activities) which alone or in combination cause landslides, flooding, degradation of water quality, erosion and sedimentation in storm sewer systems and water storage basins. It is also the intent of this chapter that through the implementation of the guidelines and regulations contained herein, the existing scenic character and quality of the neighborhood and city as a whole not be diminished.

(Code 1991, §161.01; Ord. No. 3551, 6-4-91; Ord. No. 4100, §2 (Ex. A), 6-16-98; Ord. No. 4113, §1, 8-18-98)

169.02 General Requirements

(A) *Protection.* Persons engaged in land alteration activities regulated by this chapter shall take measures to protect public and private properties from damage by such activities.

(B) *Site conditions.* Development shall generally conform to the natural contours of the land, natural drainage ways, and other existing site conditions.

(C) *Adjacent properties.* All developments shall be constructed and maintained so that adjacent properties are not unreasonably burdened with surface waters as a result of such development. More specifically, new development may not unreasonably impede water runoff from higher properties nor may it unreasonably channel water onto lower properties.

(D) *Restoration.* Land shall be revegetated and restored as close as practically possible to its original conditions so far as to minimize runoff and erosion, are concerned. Previously forested areas shall follow the City's Landscape Manual for mitigation of forested areas.

(Code No. 1991, §161.02; Ord. No. 3551, 6-4-91; Ord. No. 4100, §2 (Ex. A), 6-16-98; Ord. No. 4113, §1, 8-18-98; Ord. 4855, 4-18-06)

169.03 Permits Required/Exceptions

(A) *Permit required.* No grading, filling, excavation, or land alteration of any kind shall take place without first obtaining:

(1) A grading permit pursuant to this chapter except as specified in §169.03(B);

(2) A stormwater management, drainage and erosion control permit (hereinafter referred to as a "drainage permit") except as specified in §170.03(C) and §170.03(D); and

(3) An Arkansas Department of Environmental Quality Stormwater Construction Permit and incorporated Stormwater Pollution Prevention Plan, if required by state law.

(4) A grading permit is required by the City for any development occurring within the Hillside/Hilltop Overlay District boundaries. If a parcel of land is divided by the Hillside/Hilltop Overlay District boundary, then only that portion of land lying within the boundary is subject to the requirements of this chapter.

(B) *Exceptions where no grading permit is required.* Grading permits are not required for the following:

(1) *Excavation below finish grade.* Excavations below finished grade for basements, ~~footings~~, swimming pools, hot tubs, septic systems, retaining walls under 4 feet in height, and like structures authorized by a valid building permit.

(2) *Cemetery graves.* Cemetery graves.

(3) *Refuse disposal.* Refuse disposal sites controlled by other regulations.

(4) *Single-family/duplex.* Construction of one single-family residence, or duplex not located within the 100 year flood plain, the Hillside/Hilltop Overlay District, or on a slope 15 % or greater.

(5) *Building additions.* Building additions of less than 2,000 square feet where associated land alteration activities are not beyond the scope of what is necessary to construct said addition and are not located within the 100 year flood plain, the Hillside/Hilltop Overlay District, or on a slope 15 % or greater.

(C) *Grading permit application and approval.* No grading permit shall be issued until the grading

DRAFT

plan, endorsed by a registered architect, landscape architect, or engineer, is approved by the City Engineer. A separate permit shall be required for each site; it may cover both excavations and fills. Grading permits may be issued jointly for parcels of land that are contiguous, so long as erosion control measures are in place until project completion. Any application for a required grading permit under this chapter shall be submitted concurrently with the application and calculations for a drainage permit if such a drainage permit is required by §170.03., coordination with Chapter 167. Tree Preservation and Protection is required.

(D) *Permit posted.* A copy of the grading permit cover page shall be posted at or near the street right-of-way line and shall be clearly visible from the street.

(Code 1991, §161.03; Ord. No. 3551, 6-5-91; Ord. No. 4100, §2 (Ex. A), 6-16-98; Ord. No. 4113, §1, 8-18-98; Ord. No. 4313, 5-15-01; Ord. 4855, 4-18-06)

169.04 Minimal Erosion Control Requirements

~~If exempt under §169.02,~~ If exempt under 169.03, a grading permit is not required. However, exempt as well as non-exempt activities shall be subject to the following minimal erosion and sedimentation control measures.

(A) *Natural vegetation.* The potential for soil loss shall be minimized by retaining natural vegetation wherever possible. Development in the Hillside/Hilltop Overlay District should comply with the recommendations of the Hillside/Hilltop Best Management Practices Manual with regard to the retention of natural vegetation on Hillside/Hilltops.

(B) *Stabilization.* ~~All graded and otherwise disturbed areas shall be stabilized within 15 days immediately after the grading or disturbance has been completed. Stabilization methods such as baled straw, filter fabric, ditch checks, diversion ditches, brush barriers, sediment basins, matting, mulches, grasses and groundcover shall be used.~~

A record of the dates when grading activities occur, when construction activities temporarily or permanently cease on a portion of the site, and when stabilization measures are initiated shall be included in the erosion and sediment control plan. Except as provided in (1) and (2) below, stabilization measures shall be initiated as soon as practicable in portions of the site where construction activities have temporarily or permanently ceased, but in no case more than 14 days after the construction activity in that portion of the site has temporarily or permanently ceased.

(1) Where the initiation of stabilization measures by the 14th day after construction activity temporarily or permanently ceases is precluded by snow cover, stabilization measures shall be initiated as soon as practicable.

(2) Where construction activity will resume on a portion of the site within 21 days from when activities ceased, (e.g. the total time period that construction activity is temporarily ceased is less than 21 days) then stabilization measures do not have to be initiated on that portion of the site by the 14th day after construction activity temporarily ceased.

Stabilization practices may include: temporary seeding, permanent seeding, mulching, geotextiles, sod stabilization, vegetative buffer strips, protection of trees, and preservation of mature vegetation and other appropriate measures.

(C) *Intermittent/perennial streams.* No intermittent or perennial stream, including a 25 foot perimeter strip measured from the top of the bank, shall be graded, developed, channeled, or physically altered unless adequate guarantees are made for erosion and sedimentation control both during construction and post construction. Likewise, cuts or fills shall be setback sufficiently from intermittent and perennial streams and other stormwater drainage systems to guarantee that there will be no damage from erosion or sedimentation. Final erosion and sedimentation control measures shall be approved by the City Engineer.

(D) *Excavation material.* Excavation material shall not be deposited in or so near streams and other stormwater drainage systems where it may be washed downstream by high water or runoff. All excavation material shall be stabilized immediately with erosion control measures.

(E) *Fording streams.* Fording of streams with construction equipment or other activities which destabilize stream banks shall not be permitted.

(F) ~~*Removal of mud/dirt from public streets.* Any debris, soil, or mud from development sites reaching a public street shall be immediately removed.~~
Debris, mud, and soil in public streets. Debris, mud and soil shall not be allowed on public streets but if any debris, mud, or soil from development sites reaches the public street it shall be immediately removed via sweeping or

DRAFT

other methods of physical removal. Debris, mud, or soil in the street may not be washed off the street or washed into the storm drainage system. Storm drainage systems downstream of a development site should be protected from debris, mud, or soil in the event that debris, mud, or soil reaches the drainage system.

(Code 1991, §161.04; Ord. No. 3551, 6-5-91; Ord. No. 3947, §1, 2-6-96; Ord. No. 4100, §2 (Ex. A), 6-16-98; Ord. No. 4113, §1, 8-18-98; Ord. 4855, 4-18-06)

169.05 One-Time Approvals

(A) *Utilities.* Public and private utility organizations may obtain a one-time approval from the City Engineer for all routine underground electric, water, sewer, natural gas, telephone, or cable facilities. The approval will include a utility organization and its contractors, agents, or assigns and will be permanent in nature as long as the original approved procedures are followed.

(B) *Stockpiling materials.* One-time approval may be obtained by public or private entities for the stockpiling of fill material, rock, sand, gravel, aggregate, or clay at particular locations subject to Zoning, Chapters 160 through 165.

(Code 1991, §161.05; Ord. No. 3551, 6-4-91; Ord. No. 4100, §2 (Ex. A), 6-16-98)

169.06 Land Alteration Requirements

(A) *Grading plan evaluation.* Grading plans shall be evaluated by the City Engineer for conformance with the minimal erosion control requirements of §169.04 and the following requirements.

(B) *Requirements varied.* Variances of this chapter's requirements may be ~~varied~~ approved by the City Engineer ~~with the approval of the Planning Commission~~. The extent to which variations may be made will depend on the soil types encountered, planned slopes, planned vegetation, and investigative engineering reports. In no case shall the City Engineer waive or modify any of the minimum erosion control requirements as given in §169.04.

(C) *Cut or fill slopes.*

(1) *Finish grade.* Cut or fill slopes shall have a finish grade no steeper than 33% (3.00 horizontal to 1 vertical), ~~when~~ unless otherwise approved by the City Engineer. Land located within the Hillside/Hilltop Overlay District may have cut or fill slopes with a finish grade no steeper than 50% (2.00 horizontal to 1 vertical) unless otherwise ~~with~~ approved by ~~of~~ the City Engineer.

(2) *Maximum length.* The maximum length of any cut or fill slope without a terrace (as described in 169.06 (D) below) shall be 100 feet as measured along the ground. The terrace shall be at least six feet (6') wide.

(3) *Existing topography.* Cut or fill slopes shall be constructed to eliminate sharp angles of intersection with the existing terrain and shall be rounded and contoured to blend with the existing topography.

(4) *Setback requirements.* The following setback requirements shall be reviewed by the City Engineer for purposes of assessing safety, stability, and drainage problems: (See illustrations). ~~Setbacks from property lines may be filled or cut if grading plan is submitted jointly by the owners of both properties.~~

(a) *Setback from top or toe of cut or fill.* Buildings shall be setback from the top or toe of a cut or fill in accordance with Zoning, Chapters 160 through 165; Building Regulations, Chapter 173; or the approved grading plan, whichever is greatest.

(b) *Setbacks from property lines.* The required setback of retaining walls, cut slopes, and fill slopes from property lines shall be as given in the illustrations. Property lines may be filled over or cut if a grading plan for the cut or fill is submitted jointly by the owner of both properties or with written permission from the adjacent property owner and if no utility easements are involved. If utility easements are involved, approval is required as given in (c) below in addition to the joint submittal requirement.

(c) *Setbacks from the edge of an easement.* The required setback of retaining wall, cut slopes, and fill slopes from the edge of easements shall be as given in the illustrations. Where no utilities are present in an easement, or where utilities are planned to be relocated, and where such action is approved by all utilities, in writing, then easements may fall within a cut or fill section.

(d) *Setbacks from structures.* The required setback of retaining walls, cut slopes, and fill slopes from structures shall be as given in the illustrations. If a structure forms an integral part of the

DRAFT

retaining wall, then the setbacks do not apply to that structure.

~~(e) *Public rights-of-way.* Cuts adjacent to public rights-of-way shall be setback a minimum of 25 feet, excluding driveways or access roads.~~

(e) *Calculating setbacks.* For the purpose of calculating setbacks, any cut or fill section which is on a slope of one to one or greater shall be considered a retaining wall.

(f) *Administrative variance.* Setbacks from easement lines and structures may be varied administratively by the City Engineer if geotechnical and/or structural information is provided that in the opinion of the City Engineer justifies the variance.

(g) *Additional information required.* The City Engineer may require further geotechnical and/or structural information to show that setbacks greater than those given are not needed to protect property, utilities, or the integrity of property lines.

(D) *Cuts.*

(1) *Vertical height.* Cuts shall be limited to 10 feet in vertical height unless information demonstrating slope stability, erosion control, and drainage control is provided together with a re-vegetation plan. For nonsolid rock cuts, terraces shall be required for cuts greater than 10 feet in height. It is recommended that terracing be at a maximum ratio of one foot of horizontal terrace for every foot of vertical surface.

(2) *Maximum vertical cut.* In solid rock, as determined by geotechnical and engineering data approved by the City Engineer, the maximum vertical cut shall be 30 feet.

(3) *Fill material.* In no case shall a cut be allowed primarily for the purpose of obtaining fill material to a different site, unless the exporting site is located within an extraction district.

(E) *Fills.*

(1) *Rocks/fill.* All imported fill shall be free of rocks greater than 12 inches in diameter and any detrimental organic material or refuse debris.

(2) *Compaction.* Fill shall be placed and compacted as to minimize sliding or erosion of soil. Fill compaction shall equal the compaction of undisturbed, adjacent soil, except fills covered by Building Regulations, Chapter 173, or other structural fills. The City Engineer may require soil tests during compaction work or upon its completion at the expense of the permittee.

(3) *Grade.* Fill shall not be placed on existing slope with a grade steeper than 15% (6.67 horizontal to 1 vertical) unless keyed into steps in the existing grade and thoroughly stabilized by mechanical compaction.

(4) *Vertical height.* Fills shall be limited to 10 feet in vertical height unless information demonstrating slope stability, erosion control, and drainage control is provided together with a re-vegetation plan.

(5) *Terraces.* Terraces shall be required for fills greater than 10 feet in height. It is recommended that terracing be at a maximum ratio of one foot of horizontal terrace for every foot of vertical surface.

(F) *Erosion and sedimentation control.*

(1) *Permanent improvements.* Permanent improvements such as streets, storm sewers, curb and gutters, and other features for control of runoff shall be scheduled coincidental to removing vegetative cover from the area so that large areas are not left exposed beyond the capacity of temporary control measures.

(2) *Phased Construction.* The area of disturbance onsite at any one time shall be limited to 20 acres. An additional 20 acres (a maximum of 40 acres of disturbance at any one time) may be stripped with the permission of the City Engineer in order to balance cut and fill onsite. No additional area may be open without the permission of the City Engineer until the previously disturbed areas have been temporarily or permanently stabilized.

~~*(3) Top soil.* Top soil shall be stockpiled and protected for later use on areas requiring landscaping. If top soil or other soil is to be stockpiled for more than 30 days, a temporary cover of annual rye or other suitable grass shall be planted.~~

Stockpiling of top soil. Top soil shall be stockpiled and protected for later use on areas requiring landscaping. All storage piles of soil, dirt or other building materials (e.g. sand) shall be located more than 25

DRAFT

feet from a roadway, drainage channel or stream (from top of bank), wetland, and stormwater facility. The City Engineer may also require top soil stockpiles to be located up to fifty (50) feet from a drainage channel or stream, as measured from the top of the bank to the stockpile, for established TMDL water bodies; streams listed on the State 303(d) list; an Extraordinary Resource Water, Ecologically Sensitive Waterbody, and/or Natural and Scenic Waterbody, as defined by Arkansas Pollution Control and Ecology Commission Regulation No. 2; and/or any other uses at the discretion of the City Engineer.

Topsoil piles surfaces must be immediately stabilized with appropriate stabilization measures. Stabilization practices may include: temporary seeding (i.e. annual rye or other suitable grass), mulching, and other appropriate measures. Sediment control measures such as silt fence shall be provided immediately for stockpiles and remain in place until other stabilization is in place. Storm drain inlets must be protected from potential sedimentation from storage piles by silt fence or other appropriate barriers.

(4) *Existing vegetation.* Every means shall be taken to conserve and protect existing vegetation.

(5) *Re-vegetation.* Re-vegetation shall be required to meet the following performance standards (sediment controls shall remain in place until re-vegetation is established) unless otherwise allowed by the City Engineer:

(a) *Topsoil.* A minimum of 4 inches of topsoil shall be required to be either existing or installed in areas to be re-vegetated ~~as set forth in§169.06(F)(6) below~~. Any application of topsoil and seeding under the drip line of a tree should be minimized to 3 inches so as not to damage the trees root system.

(b) *Zero to 10% grade*: Re-vegetation shall be a minimum of seeding and mulching. Said seeding shall provide complete and uniform coverage that minimizes erosion and runoff in no more than two growing seasons.

(c) *10:1 up to 4:1 grade*: Re-vegetation shall be a minimum of hydro-seeding with mulch and fertilizer, sod, or groundcover. Said planting shall provide complete and uniform coverage in no more than two growing seasons.

(d) *4:1 to 3:1 grade*: The slope shall be covered with landscape fabric and hydro-seeded with mulch and fertilizer, or staked sod, or groundcover. Said planting shall provide complete and uniform coverage in no more than two growing seasons.

(e) *More than 3:1 grade*: Any finish grade over *3:1* shall be stabilized with one or more of the following:
1) Retaining walls;
2) Cribbing with landscape fabric;
3) Terracing with groundcover;
4) Riprap;
5) Staked Sod (up to 2:1 slope)
If Cribbing, Terracing, or Riprap is used, the slope's stability and erodibility must be equivalent to or better than its predevelopment state.

(f) *Hillside/Hilltop Overlay District.* Re-vegetation of lands within the Hillside/Hilltop Overlay District shall be planted immediately after the physical alteration of the land with complete and uniform ground cover. Sod, erosion fabric, herbaceous groundcover (in wooded areas), and/or a hydroseed with warm season grasses is required. Re-vegetation requirements shall be met prior to the issuance of a certificate of occupancy. Cut and Fill tie-back slopes shall be re-vegetated with appropriate tree species to achieve a minimum of 25% tree canopy at maturity.

(6) *Plant/water.* Plant materials shall be watered or irrigated and tended. Where irrigation or regular watering is not available, only native or acclimated plant species shall be used. If the soil cannot properly sustain vegetation, it must be appropriately amended. If re-vegetation is not firmly established and healthy after one year, the ~~landscape administrator~~ urban forester shall require that it be redone in part or total.

(7) *Plant/terrace bench.* Plant materials shall be planted along terrace benches. Said plantings shall be spaced as necessary to thoroughly stabilize the terrace bench. The remainder of the terraced slope shall be re-vegetated and stabilized according to §169.06(F)(5) above.

(8) *Permanent erosion control.* The developer shall incorporate permanent erosion control features at the earliest practical time.

DRAFT

Temporary erosion control measures will be used to correct conditions that develop during construction that were unforeseen during the design stage, that are needed prior to installation of permanent erosion control features, or that are needed temporarily to control erosion that develops during normal construction projects, but are not associated with permanent control features on the project.

~~(10) *Allowable soil loss.* Allowable soil loss shall not exceed the "T" factor, which is a component of the universal soil loss equation.~~

(G) *Undisturbed land requirements.* In the development of residential subdivisions, allowable grading of slopes shall be in accordance with this table.

Average Grade	Minimum Undisturbed Area
10 to 15 percent	40 percent
15 to 20 percent	50 percent
> 20 percent	60 percent

In the development of Large Scale Developments, Large Site Improvement Plans, and lots within the Hillside Overlay District, the minimum amount of undisturbed land shall equal the percent minimum tree canopy pursuant to §167.04 (C). Planned Zoning Districts shall show undisturbed areas, but may be approved by the City Council with lesser percentages of undisturbed area than required above.

(H) *Required retaining wall and rock cut design.*

(1) *Design/inspection.* Any retaining wall more than four feet in height shall be designed by a registered professional engineer, and shall be field inspected by the design engineer. The design engineer shall provide proof of inspection and certify that the wall was constructed in conformance with the design. The City Engineer may require retaining walls less than four feet in height to be designed by a professional engineer.

(2) *Investigation/reports.* All proposed rock cuts and any cut or fill 10 feet or greater will require a geotechnical investigation and a formal report submitted by a registered professional engineer qualified to make such investigations.

(3) *Safety railings.* Safety railings may be required on any retaining wall 2.5 feet or higher. The decision as to whether to require safety railing shall be based on potential pedestrian and public access to the retaining wall and applicable building codes. This requirement for safety rails shall also apply to vertical or near vertical rock cuts and to steep (greater than 3:1) cut or fill slopes.

(Code 1991, §161.07; Ord. No. 3551, 6-4-91; Ord. No. 4100, §2 (Ex. A), 6-16-98; Ord. No. 4113, §1, 8-18-98; Ord. No. 4855, 4-18-06)

DRAFT

LEGEND

----------	EXISTING GROUND
PL ----------	PROPERTY OR EASEMENT LINE
~ ~ ~ ~	PROPOSED GROUND
.....	CONSTRUCTION LIMITS
SB_1	MINIMUM SETBACK FROM PROPERTY LINE DOWNHILL
SB_2	MINIMUM SETBACK FROM PROPERTY LINE UPHILL
TB	TIE BACK
S	SLOPE
F_1	FOUNDATION DOWNHILL
F_2	FOUNDATION UPHILL
C_1	LIMITS OF CONSTRUCTION–DOWNHILL
C_2	LIMITS OF CONSTRUCTION–UPHILL

NOTES

1. WRITTEN PERMISSION FROM ADJACENT PROPERTY OWNER IS REQUIRED TO FILL OR EXCAVATE OVER EXISTING PROPERTY LINES.
2. CONSTRUCTION LIMITS INDICATED ARE FOR INITIAL CONSTRUCTION; RECONSTRUCTION; OR MAINTENANCE OF THE STRUCTURE IN THE FUTURE.
3. REVIEW ZONING & BUILDING SETBACK REQUIREMENTS, DEFER TO WHICHEVER MAY BE GREATER.
4. MINIMUM SLOPE AND DISTANCE FROM THE STRUCTURE PER STATE BUILDING CODE MUST NOT BE VIOLATED.
5. REFER TO THE OSHA TECHNICAL MANUAL SECTION 5 CHAPTER 2 FOR SOIL TYPES AND SLOPE EXCAVATION TO DETERMINE THE LIMITS OF CONSTRUCTION.

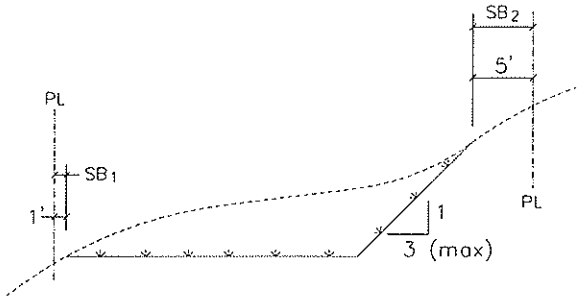

Downhill — CUT SLOPE — Uphill

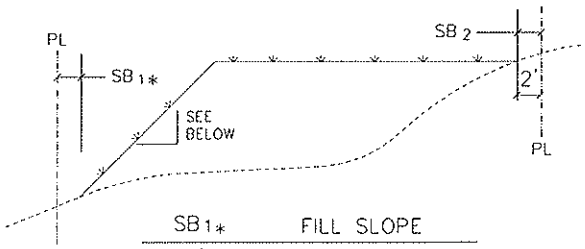

SB_1*	FILL SLOPE
2'	Flatter Than 5:1
5'	5:1 To 3:1
8'	Greater Than 3:1

Downhill — FILL SLOPE — Uphill

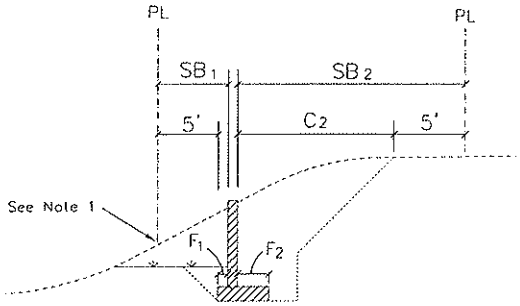

C_2=Limits of Construction See Note 5

$SB_1 = F_1 + 5'$ — Downhill

RETAINING WALL CUT SLOPE

$SB_2 = C + 5'$ — Uphill

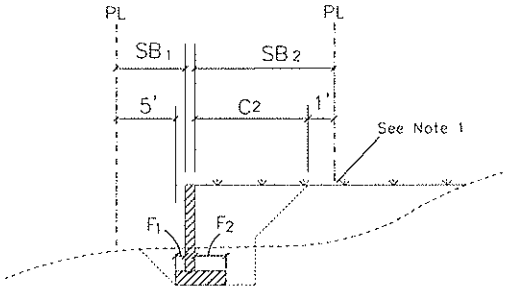

C_2=Limits of Construction See Note 5

$SB_1 = F_1 + 5'$ — Downhill

RETAINING WALL FILL SLOPE

$SB_2 = C + 5'$ — Uphill

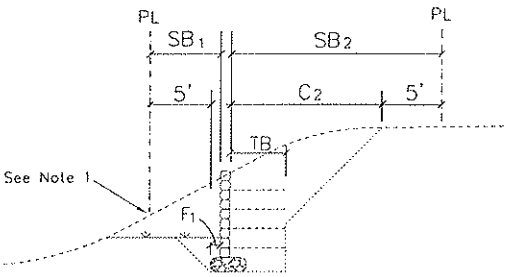

C_2=Limits of Construction See Note 5

$SB_1 = F_1 + 5'$ — Downhill

BLOCK RETAINING WALL CUT SLOPE

$SB_2 = C + 5'$ — Uphill

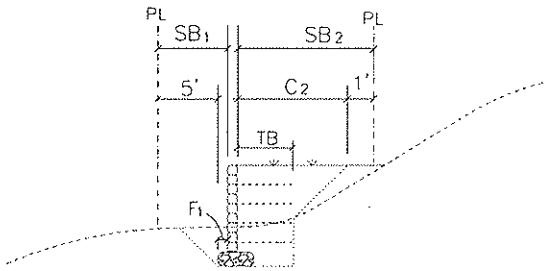

C_2=Limits of Construction See Note 5

$SB_1 = F_1 + 5'$ — Downhill

BLOCK RETAINING WALL FILL SLOPE

$SB_2 = C + 5'$ — Uphill

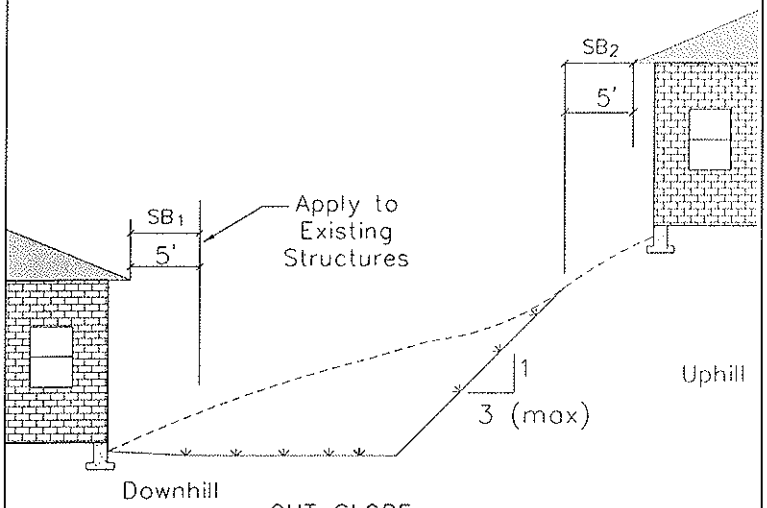

CUT SLOPE–
EXISTING STRUCTURES

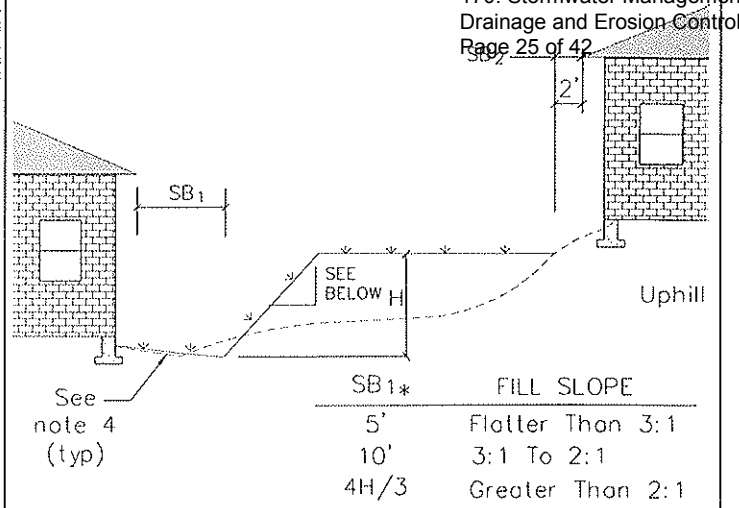

SB1*	FILL SLOPE
5'	Flatter Than 3:1
10'	3:1 To 2:1
4H/3	Greater Than 2:1

FILL SLOPE–
EXISTING STRUCTURES

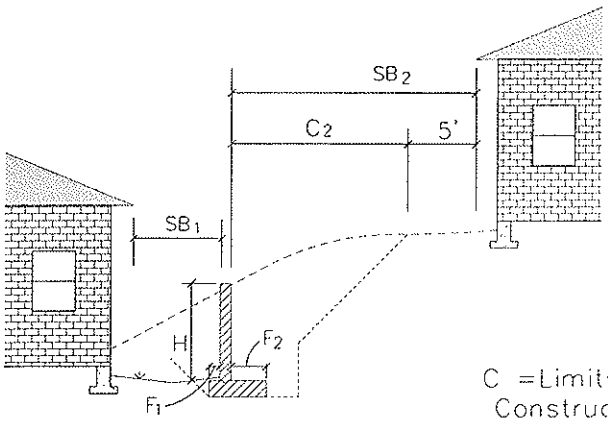

C =Limits of Construction See Note 5

$SB_1 = H*4/3$
Downhill

RETAINING WALL WITH STRUCTURES CUT SLOPE

$SB_2 = C+5'$
Uphill

D=5' For Existing
D=2' For Proposed

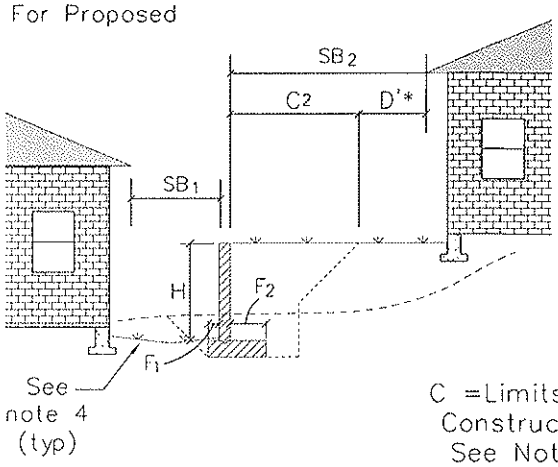

C =Limits of Construction See Note 5

$SB_1 = H*4/3$
Downhill

RETAINING WALL WITH STRUCTURES FILL SLOPE

$SB_2 = C+5'$
Uphill

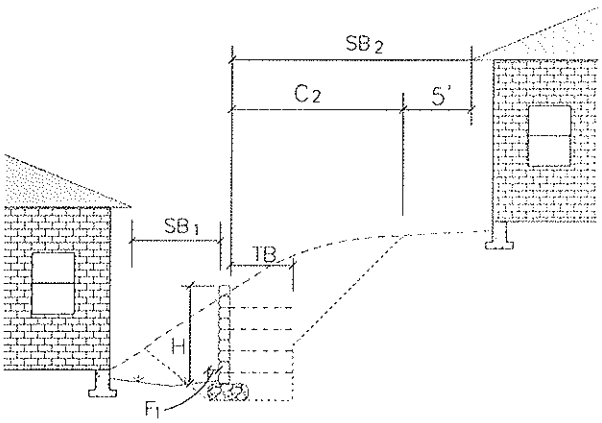

C =Limits of Construction See Note 5

$SB_1 = H*4/3$
Downhill

BLOCK RETAINING WALL WITH STRUCTURES CUT SLOPE

$SB_2 = C+5'$
Uphill

D=5' For Existing
D=2' For Proposed

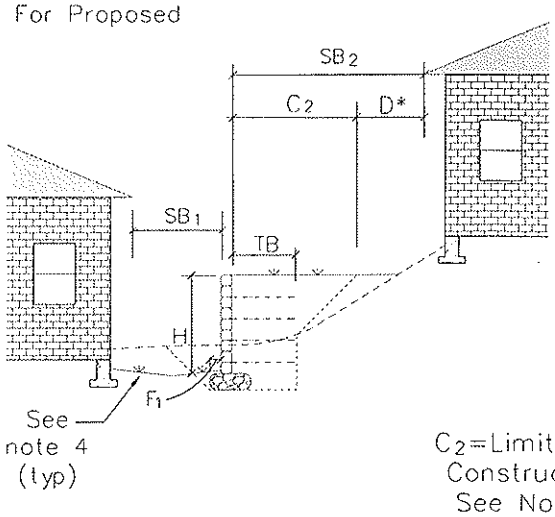

C_2=Limits of Construction See Note 5

$SB_1 = H*4/3$
Downhill

BLOCK RETAINING WALL WITH STRUCTURES FILL SLOPE

$SB_2 = C+5'$
Uphill

169.07 Grading Plan Specifications

(A) *Grading plan.* The applicant shall prepare a grading plan as follows:

(1) *Site plan.* Site plan at a scale no smaller than one inch equals 50 feet, showing property lines; vicinity map; name of owner, developer and adjacent property owners.

(2) *Existing grades.* Existing grades shall be shown with dashed line contours and proposed grades with solid line contours. Grading plans shall be required to show both the proposed grade and the undisturbed area. Contour intervals shall be a maximum of two feet. Spot elevations shall be indicated.

(3) *Designation of grade.* Areas with 0 to 10%, 10 to 15%, 15 to 20% and more than 20% grade shall each be identified in a distinguishing manner.

(4) *Identify land to be disturbed.* Land areas to be disturbed shall be clearly identified.

(5) *Engineer/architect.* Seal of a registered engineer, architect, or landscape architect certifying that the plan complies with this chapter.

(6) *Cuts and fills.* All cuts and fills, including height and slope, shall be clearly shown on the plan.

(7) *Streets and rights-of-way.* Location and names of all existing or platted streets or rights-of-way within or adjacent to tract and location of all utilities and easements within or adjacent to the property shall all be indicated.

(8) *Lot/building, etc. identification.* The proposed location of lots, buildings, streets, parking lots and parks, playgrounds or green space shall be indicated. Also to be indicated is any existing or proposed building within 100 feet of the site.

(9) *Soil type.* Soil types shall be identified according to the Unified Soil Classification System.

(10) *Natural features.* Location of natural features such as drainage ways, ponds, rock outcroppings, and tree cover. Indication of 100 year floodplains as defined by FEMA.

(11) *Streets and drainage ways.* Profiles and cross sections for proposed streets and drainage ways.

(12) *Acreage/zoning.* Total acreage and zoning classification.

(13) *Surface water.* Provisions for collecting and discharging surface water.

(14) *Underground utilities.* Profiles and cross sections of streets, drainage systems, and underground utilities, if they are necessary to clarify the grading plan in terms of potential erosion or runoff, or if the grading on site has the potential of disturbing the utility line.

(15) *Treatment of slopes and benches.* The method of treatment for all slopes and benches shall be indicated.

(16) *Natural vegetation preservation.* Proposals for preserving natural vegetation and description of re-vegetation or other permanent erosion control strategy.

(17) *Runoff/sedimentation.* Specification of measures to control runoff and sedimentation during construction indicating what will be used such as straw bales, silt dams, brush check dams, lateral hillside ditches, catch basins, and the like.

(18) *Preliminary plat master build-out grading plan.* The applicant shall prepare a master grading plan to be followed during individual lot development to convey runoff to a public drainage easement or right of way. In addition to the requirements of 169.07 A, the following shall be required for individual lot drainage design:

a. Identify lot lines and conceptual foot print of residence.

b. Establish the minimum finish floor and grading adjacent to the residential structure in accordance with Chapter 173 Building Regulations and the Arkansas Fire Prevention Code.

c. Indicate individual lot drainage with the use of spot elevations and flow arrows.

i. The minimum slope of the flow path from the top of curb, top bank, or approved drainage inlet to the high point of the final graded lot shall be at a minimum of 2% for grassed surfaces.

DRAFT

ii. In general, drainage should be routed on the shortest practicable flow path to the public right of way or drainage easement.

d. Non structural grassed swales for rear lot drainage concentration is discouraged and shall not be installed in combination with a utility easement.

e. Utility Easements shall be graded and shaped in accordance with the master build-out grading plan during preliminary plat construction.

i. Provisions will be considered to accommodate positive drainage until build-out occurs.

(B) *Preliminary grade plan.* The preliminary grading plan shall include all the above items except (5), (7), (11), (13), and (14) above. In addition to the above items, the city may require a cross section through the property showing existing and proposed grades as part of the preliminary submission.

The following additional required information may be reported in text rather than shown on the grading plan.

(1) *Time schedule.* A time schedule indicating the anticipated starting and completion dates of the development sequence and time of exposure of each area prior to stabilization measures.

(2) *Description / fill material & compaction.* Description of quantity (in cubic yards), source, and composition of imported fill material and compaction specifications. Also note the quantity (in cubic yards) and destination of excavation materials to be removed from the site.

(3) *Dust.* Where excessive dust may become a problem, a plan for spraying water on heavily traveled dirt areas shall be addressed.

(4) *Soils engineering study.* The City Engineer may require a soil engineering study, or soil loss calculations if site conditions so warrant.

(Code 1991, §161.08; Ord. No. 3551, 6-4-91; Ord. No. 4100, §2 (Ex. A), 6-16-98; Ord. No. 4113, 8-18-98; Ord. No. 4855, 4-18-06)

169.08 Grading Plan Submittal

(A) *Preliminary grading plan.* A preliminary grading plan shall be submitted at the time of preliminary plat submission for subdivisions or plat submission for large scale development, whichever is applicable.

(B) *Final grading plan.* No subdivision may be finalized, nor large scale development plat approved before a final grading plan has been submitted to the City Engineer and approved. The final grading plan and the final plat of land located within the Hillside/Hilltop Overlay District shall have the following plat note stating: 'Property and lot owners of lands located within the Hillside/Hilltop Overlay District shall have foundation plans designed, approved and sealed by a professional architect or engineer.

(C) A copy of the Stormwater Pollution Prevention Plan (SWPPP) is required to be submitted with the grading plan for sites one acre or larger.

(D) In cases where neither subdivision plat, nor LSD plat is applicable, proof of notification of adjacent property owners and grading plan must be submitted simultaneously with the application for a grading permit

(Code 1991, §161.09; Ord. No. 3551, 6-4-91; Ord. No. 4100, §2 (Ex. A), 6-16-98; Ord. No. 4855, 4-18-06)

Cross reference(s)--Notification and Public Hearings, Ch. 157.

169.09 Minor Modifications

Finish grades shall be allowed no more than a 0.50 foot tolerance from the grading plan. However, the City Engineer may authorize in writing minor modifications so long as they do no alter the direction of run-off and otherwise comply with the intent of this chapter. When applicable, major modifications must be brought before the Subdivision Committee for their approval.

169.10 Approval

Approval of a grading plan is contingent on meeting all the requirements of this ordinance plus any set of varied requirements approved by the Planning Commission.

(Code 1991, §161.10;Ord. No. 3551, 6-4-91; Ord. No. 4100, §2 (Ex. A), 6-16-98; Ord. No. 4113, 8-18-98)

169.11 Discovery Of Historic Resources

Whenever, during the conduct of grading any historical, pre-historical, or paleontological materials are discovered, grading shall cease and the City Engineer shall be notified.

DRAFT

(Code 1991, §161.21; Ord. No. 3551, 6-4-91; Ord. No. 4100, §2 (Ex. A), 6-16-98)

169.12 Certificate Of Occupancy

All re-vegetation and grading plan improvements shall be in place before a certificate of occupancy shall be issued. When a property owner has finished building construction but has yet to install plant material, said owner may apply for a temporary certificate of occupancy. In evaluating whether or not to grant a temporary certificate of occupancy, the City Engineer ~~Building Safety Division Director~~ shall consider weather conditions and temporary stabilization measures.

(Code 1991, §161.15; Ord. No. 3551, 6-4-91; Ord. No. 4100, §2 (Ex. A), 6-16-98)

169.13 Owner Responsibility

The property owner shall be responsible both for his or her employees and for all contractors and subcontractors from the onset of development until the property is fully stabilized. If property is transferred anytime between the onset of development and at the time it is fully stabilized, all responsibility and liability for meeting the terms of the chapter shall be likewise transferred to the new property owner.

(Code 1991, §161.16; Ord. No. 3551, 6-4-91; Ord. No. 4100, §2 (Ex. A), 6-16-98)

169.14-169.99 Reserved

DRAFT

TITLE XV UNIFIED DEVELOPMENT CODE
CHAPTER 170: STORMWATER MANAGEMENT, DRAINAGE AND EROSION CONTROL

170.01 INTENT 3
170.02 ADOPTION OF DRAINAGE CRITERIA MANUAL 3
170.03 PERMITS REQUIRED 3
170.04 DRAINAGE PERMIT CONDITIONS 4
170.05 DRAINAGE PERMIT APPLICATION 5
170.06 SUBMISSION, REVIEW, AND APPROVAL OF PLANS 5
170.07 PERFORMANCE CRITERIA 6
170.08 MAINTENANCE RESPONSIBILITY 7
170.09 DRAINAGE PERMIT PROCESSING 9
170.10 STORMWATER DISCHARGES FROM CONSTRUCTION ACTIVITIES 9
170.11 PRELIMINARY PLAT, LOT REQUIREMENTS 12
170.12 1 & 2 FAMILY RESIDENTIAL REQUIREMENTS 12
170.13 STORMWATER POLLUTION PREVENTION 12
170.14-170.99 RESERVED 14

DRAFT

EXHIBIT
B
tabbies

DRAFT

CHAPTER 170: STORMWATER MANAGEMENT, DRAINAGE AND EROSION CONTROL

170.01 Intent

(A) *Intent.* It is the intent of this chapter to protect, maintain, and enhance the health, safety, and general welfare of the citizens of the City of Fayetteville by:

(1) Preventing increases in the magnitude and frequency of stormwater runoff to prevent increases in flood flows and associated hazards and costs.

(2) Controlling soil erosion and sedimentation to minimize soil deposition in streams and other receiving water bodies and storm drainage systems.

(3) Requiring surface and stormwater management practices that comply with requirements of this chapter.

(4) Promoting the development of stormwater facilities that are aesthetically desirable.

(B) *Findings of fact.* The City Council finds that uncontrolled stormwater runoff from developed land adversely affects the public health, safety, and welfare because:

(1) *Impervious surfaces/ runoff.* Impervious surfaces increase the quantity and velocity of surface runoff, which reduces percolation of water through soil and increases erosion and flooding.

(2) *Collection and conveyance of stormwater.* Improper stormwater collection and conveyance adversely affects property and increases the incidence and severity of flooding, which can endanger property and human life.

(3) *Erosion.* Increased erosion leads to sedimentation in stormwater management systems, which decreases the system's capacity

(4) *Future problems.* Many future problems can be avoided if land is developed in accordance with sound stormwater runoff management practices.

(Code 1991, §163.03; Ord. No. 3895, 1, 6-20-95; Ord. No. 4100, §2 (Ex. A), 6-16-98; Ord. No. 4855, 4-18-06; Ord. 4920, 9-05-06)

170.02 Adoption Of Drainage Criteria Manual

The City Council hereby adopts by reference the *Drainage Criteria Manual*, prepared for the City of Fayetteville, and adopted by Ordinance No. 3895 of the City of Fayetteville, and as may be amended from time to time. All technical procedures and design standards contained therein shall have the same force and effect as if printed word for word in this chapter.

(Code 1991, §163.03; Ord. No. 3895, §1, 6-20-95; Ord. No. 4100, §2 (Ex. A), 6-16-98; Ord. 4920, 09-05-06)

170.03 Permits Required

(A) *Applicability.* This chapter shall apply to all land within the corporate limits of the City of Fayetteville. No person may subdivide and develop, change to a more intensive land use, construct or reconstruct a structure, or change the size of a structure, or conduct grading, clearing or filling activities without first obtaining a stormwater management, drainage and erosion control permit (hereinafter referred to as a "drainage permit") from the city, except as specified in §170.03(C) and §170.03 (D) below.

(B) *Permit application.* Any application for a drainage permit shall be submitted according to §170.05 below, and shall be submitted concurrently with the application for a grading permit, if such grading permit is required by § 169.03. The drainage permit applications shall include at the time of submission the calculations required by §170.05(B)(7). The application also shall state whether or not detention is required, and shall provide the basis for that conclusion, utilizing the performance criteria set forth in §170.07 below. The City Engineer shall make the final determination regarding detention.

(C) *Project not requiring detention.* Any project that requires a drainage permit that does not require detention may receive, with the approval of the City Engineer, a grading permit prior to issuance of the drainage permit. Any grading permit issued prior to the issuance of a required drainage permit shall be subject to the following:

(1) *Insufficient or incomplete drainage permit application.* If the drainage permit application, including the required calculations, is determined by the City ~~Fayetteville Code of Ordinances~~ Engineer to be insufficient or incomplete, it shall be revised and resubmitted by the applicant

DRAFT

~~within four (4) weeks of receipt of applicant~~ within four (4) weeks of receipt of written notice of insufficiency or incompleteness.

(2) *Deadline for the revised application.* A stop work order for all grading on the project shall be issued by the City Engineer if a revised application is not submitted within four (4) weeks of receipt by applicant of the written notice of insufficiency or incompleteness. However, the City Engineer may delay issuance of the stop work order if the City Engineer determines that the applicant has demonstrated prior to the deadline that circumstances not reasonably foreseeable and beyond the applicant's reasonable control prevented his timely resubmission of a sufficient and complete revised drainage permit application.

(3) *Insufficient or incomplete revised application.* A stop work order for all grading on the project shall be issued by the City Engineer if the revised application is determined by the City Engineer to be still insufficient or incomplete.

(4) *Stabilization and revegetation after stop work order.* If a stop work order is issued pursuant to §170.03 (C) (3), the applicant shall stabilize and revegetate all graded and otherwise disturbed areas as set forth in §169.06(F)(6) and §169.04(B).

(5) *Termination of stop work order.* Any stop work order issued pursuant to §170.03 (C) (2) or §170.03 (C)(3), shall expire upon the issuance of a drainage permit and compliance with any conditions contained in the drainage permit.

(D) *Exceptions where no drainage permit is required.* Drainage permits are not required for the following:

(1) *Single-family/duplex.* One single-family residence or duplex. A drainage permit is not required. See Section 170.12 for building permit submittal requirements.

(2) *Commercial/industrial.* One commercial or industrial project built on an individual lot that is part of a larger subdivision that has been issued an approved drainage control permit when the proposed project is demonstrated to be in compliance with the overall subdivision drainage permit.

(3) *Existing commercial/industrial.* Existing commercial and industrial structure where additional structural improvements are less than 2,000 square feet.

(4) *Maintenance.* Maintenance or clearing activity that does not change or affect the quality, rate, volume, or location of stormwater flows on the site, or runoff from the site.

(5) *Agriculture.* Bona fide agricultural pursuits, for which a soil conservation plan has been approved by the local Soil and Water Conservation District.

(6) *Emergency.* Action taken under emergency conditions either to prevent imminent harm or danger to persons, or to protect property from imminent danger of fire, violent storms, or other hazards.

(E) *Compliance with chapter provisions.* Although a specific permit is not required for these particular circumstances, this exception does not exempt the owner/developer/builder from complying with the pollution prevention and erosion and sediment control provisions of this chapter.

~~(F) *Status of previous approvals.* Projects with unexpired permits approved and all preliminary plats approved by the City Engineer prior to June 20, 1995, shall meet only the requirements in effect when the permit was approved.~~

(Code 1991, §163.04; Ord. No. 3895, §1, 6-20-95; Ord. No. 4100, §2, (Ex. A), 6-16-98; Ord. No. 4314, 5-15-01; Ord. 4920, 9-05-06)

170.04 Drainage Permit Conditions

Each permit issued shall be subject to the following conditions.

(A) *Area.* The development, including associated construction, shall be conducted only within the area specified in the approved permit.

(B) *Execution.* Activities requiring a stormwater management, drainage, and erosion control permit shall not commence until the ~~construction~~ drainage permit is approved. The approved ~~construction~~ drainage permit shall be on file with the city and a copy on file with the contractor for review and inspection upon request.

(C) *Inspections.* A schedule of inspections to be carried out during the construction phase of permitting shall be established as conditions to the permit.

(D) *Duration.*

(1) Unless revoked or otherwise modified, the duration of a ~~construction~~ drainage permit issued pursuant to this chapter shall be one year.

DRAFT

(2) If the permitted project discharge structure is not completed prior to expiration, the ~~construction~~ drainage permit duration can be extended to cover the project duration, subject to approval of the City Engineer.

(E) *Maintenance.* Maintenance activities, as specified in the approved maintenance plan, shall be executed routinely, with scheduled reporting to the City Engineer.

(F) *Modifications.* If the activity authorized by the permit is not completed according to the approved schedule and permit conditions, the City Engineer shall be notified. For revisions resulting in a schedule extension of more than 30 days, or if deviations from the permit conditions are expected to occur, approval of a permit modification is required by the City Engineer.

(G) *Transfer.* No transfer, assignment, or sale of the rights granted by virtue of an approved permit shall be made without prior written approval from the City Engineer.

(H) *Special.* Any additional special conditions, as deemed appropriate by the City Engineer, shall be established to address specific project needs or circumstances.

(Code 1991, §163.05; Ord. 3895, §1, 6-20-95; Ord. No. 4100, §2 (Ex. A), 6-16-98; Ord. 4920, 9-05-06)

170.05 Drainage Permit Application

A storm water management, drainage, and erosion control permit application shall be submitted to the City Engineer using appropriate forms as provided by the city. A permit application shall contain sufficient information and plans to allow the City Engineer to determine whether the project complies with the requirements of this chapter. The specific items to be submitted for a permit application shall be in the form and follow the procedures as described in the *Drainage Criteria Manual*, Section 1, Drainage Report Checklist. Submittal information and plans shall include, but not be limited to the following:

(A) *Applicant identification.* Applicant information, including the name, address, email, and telephone number of the owner and developer, and proof of ownership of the property to be permitted. In addition, the legal description of the property shall be provided, and its location with reference to such landmarks as major water bodies.

(B) *Plan.* Stormwater management, drainage and erosion control plan, shall include, but not be limited to the following:

(1) *Aerial photograph.* Aerial photograph~~, if available,~~ of the project vicinity, covering the project area and the total lands that contribute runoff.

(2) *Topographic map.* Topographic map of the project area showing the location and elevation of benchmarks, including at least one benchmark for each control structure.

(3) *Land use map.* Land use map showing both current and proposed conditions for the drainage area that contributes runoff.

(4) *Soils and vegetation map.* Soils and vegetation map displaying the most recent U.S. Soil Conservation Service information and encompassing both the project area and the drainage area that contributes runoff.

(5) *Grading, drainage, paving, building drawings.* Proposed grading, drainage, paving, and building drawing(s) showing details of proposed grading, drainage, paving, and buildings.

(6) *Erosion and sediment control drawings.* Erosion and sediment control drawing(s) and specifications identifying the type, location, and schedule for implementing erosion and sediment control measures, including appropriate provisions for maintenance and disposition of temporary measures.

(7) *Technical report.* Technical report, prepared by a registered professional engineer, describing the assumptions, calculations, and procedures used for determining compliance with the performance criteria established by this chapter.

(8) *Maintenance report.* Maintenance report (text and drawings), prepared by a registered professional engineer, describing the activities and schedule required to operate and maintain the permitted facilities until accepted by the city.

(Code 1991, §163.06; Ord. No. 3895, §1, 6-20-95; Ord. No. 4100, §2 (Ex. A), 6-16-98; Ord. No. 4855, 4-18-06; Ord. 4920, 9-05-06)

170.06 Submission, Review, And Approval Of Plans

(A) *General.* The stormwater management, drainage, and erosion control plans shall be prepared by the engineer of record, who is a licensed professional engineer of the State of Arkansas.

(B) *Pre-preliminary drainage plan and review.* A pre-preliminary stormwater management, drainage, and erosion control plan review with the engineering staff is suggested before platting, re-

DRAFT

plats, lot splits, building permits, and/or development improvements begin for the purpose of overall general drainage concept review.

(C) *Preliminary stormwater and drainage plan.* Preliminary stormwater management, drainage, and erosion control plans and accompanying information as described in the *Drainage Criteria Manual* shall be submitted at the time of the preliminary plat, replat, lot split, building permit , site improvement plan, large scale development, and/or development improvements are submitted. If needed, a review meeting will be scheduled by the City Engineer with a representative of the developer, including the engineer, to review the overall concepts included in the preliminary stormwater management, drainage, and erosion control plan. The purpose of this review shall be to jointly agree upon an overall stormwater management concept for the proposed development and to review criteria and design parameters that shall apply to final design of the project.

(D) *Final stormwater management, drainage, and erosion control plan.* Following the preliminary stormwater management, drainage, and erosion control plan review, the final stormwater management drainage, and erosion control plan shall be prepared for each phase of the proposed project as each phase is developed. The final plan shall constitute a refinement of the concepts approved in the preliminary stormwater, drainage, and erosion control plan, with preparation and submittal of detailed information as required in the *Drainage Criteria Manual*. This plan shall be submitted at the time construction drawings are submitted for approval.

(E) *Review and approval of final stormwater management, drainage, and erosion control plans.* Final stormwater management, drainage, and erosion control plans shall be reviewed by the City Engineer. If it is determined according to present engineering practice that the proposed development will provide control of stormwater runoff in accordance with the purposes, design criteria, and performance standards of these regulations and will not be detrimental to the public health, safety, and general welfare, the City Engineer shall approve the plan or conditionally approve the plan, setting forth the conditions thereof.

(F) *Off-site improvements.* If it is determined that offsite drainage improvements are required, and that such specific off-site drainage improvements are consistent with the city's current and established priorities, then cost sharing will be in accordance with "Required Off-site Improvements." If the city is unable, or unwilling, to contribute its share of the off-site costs, the developer shall have the option of:

(1) *Developer's expense.* Building the off-site improvements at his/her own expense;

(2) *Detention.* Providing detention so as to match downstream capacities; or

(3) *Delay project.* Delaying the project until the city is able, or willing, to share in the off-site costs.

(Code 1991, §163.07; Ord. No. 3895, §1, 6-20-95; Ord. No. 4100, §2 (Ex. A), 6-16-98; Ord. 4920, 9-05-06)

170.07 Performance Criteria

(A) *Storm water management, drainage, and erosion control plan.* Stormwater management, drainage, and erosion control plans shall be prepared in accordance with performance standards that have been structured to achieve the purposes and objectives of this chapter as well as to ensure that the quality and quantity of runoff after development is not substantially altered from predevelopment conditions.

(B) *Performance criteria.* Except as otherwise provided in this chapter, a development must be designed, constructed, operated, and maintained to comply with the following performance criteria:

(1) *Flood Damage Prevention Code.* Provisions for floodplain management criteria shall be consistent with those contained in Chapter 168, the Flood Damage Prevention Code.

(2) *Peak discharge.* The post-development peak rate of surface discharge must not exceed the existing discharge for the 100 year, 24 hour storm, the 10 year, 24 hour storm, and the 2 year, 24 hour storm, unless other discharge limits are deemed applicable for a specific site by the City Engineer.

(3) *Low Impact Development.* Use of Low Impact Development design strategies, as described in Chapter 179, to attenuate lesser storms and more closely mimic predevelopment hydrology is encouraged.

(4) *Direct Discharge.* Direct Discharge of a pipe into streams and/or floodways is not allowed. A stilling basin or other structure that will collect sediment, trash, etc and that will reduce the likelihood of erosion in the receiving stream due to discharge from the pipe shall be installed at pipe discharges into streams and/or floodways.

DRAFT

(5) *Erosion and channel stability.* All stormwater management systems shall be evaluated based on their ability to prevent erosion and sedimentation of the receiving waters and adverse impacts on the site's natural systems. The design engineer shall consider the on-site and downstream effects of the peak discharges and shall design both the permanent and the construction phase of the stormwater management system in a manner that will not increase flooding, channel instability, or erosion downstream when considered in aggregate with other developed properties and downstream drainage capacities.

(6) *Drainage into wetlands and floodways.* Areas defined as "wetlands" and "floodways" by the appropriate federal agencies shall be protected from adverse changes in runoff quantity and quality from associated land development.

(7) *Drainage Criteria Manual.* The technical procedures and design standards contained in the *Drainage Criteria Manual,* prepared for the City of Fayetteville, and adopted by this chapter and as may be amended from time to time, shall be used for guidance to determine compliance with the performance criteria established by this chapter.

(Code 1991, §163.08; Ord. No. 3895, §1, 6-20-95; Ord. No. 4100, §2 (Ex. A), 6-16-98; Ord. 4920, 9-05-06)

170.08 Maintenance Responsibility

(A) *Dedication.* Those stormwater management systems approved in compliance with this chapter that will function as ~~an integral~~ a part of the stormwater management conveyance system ~~maintained by the city~~ shall be dedicated to the city. All areas and/or structures to be dedicated to the city must be dedicated by plat or separate instrument and accepted by ~~formal letter from~~ the City Engineer.

(B) *Perpetual Inspections and Maintenance Agreements.* The City shall require a Stormwater Management Practices Maintenance Agreement, for systems not dedicated to the City, of all entities for stormwater management conveyance systems and structures in the stormwater management plan for their proposed development. The City shall require the following set of documents and agreements prior to stormwater systems and structures approval:

(1) *Agreement of Maintenance Responsibility.* The owner of the property on which the stormwater systems structures have been installed shall agree to undergo ongoing inspections, and document maintenance and repair needs.

(2) *Agreement to Maintain Stormwater Systems and Structures.* The owner of the property on which stormwater systems and structures have been installed shall agree to maintain in good condition and promptly repair and restore all grade surfaces, walls, drains, dams and structures, vegetation, erosion and sedimentation controls, and other protective devices.

(C) *Approved Entities for Perpetual Maintenance Agreements.* All stormwater management structures or systems ~~accepted as dedications by the city shall be maintained by the city. All systems not~~ approved in compliance with this chapter but not dedicated to the City shall have adequate easements to permit the city to inspect and, if necessary to take corrective action should the responsible entity fail to properly maintain the system. Maintenance of all other stormwater management structures and systems approved in compliance with this chapter and not dedicated to the City shall be accomplished by the legal entity responsible for maintenance, which may include an approved entity as identified in the following:

~~(1) *Local government.* A county, municipality, municipal service taxing unit, special district, or other appropriate governmental unit;~~

(1) *Special districts and public entities.* An active water control district, ~~a~~ drainage district, public utility, or a special assessment district;

~~(3) *State or federal agency.* An appropriate state or federal agency;~~

~~(4) *Public entity.* An officially franchised, licensed, or approved communication, water, sewer, electrical, stormwater, or other public utility;~~

(2) *Developer or property owner.* A developer or property owner who provides a ~~bond or other assurance of continued financial capability to operate and maintain stormwater management systems and who executes a legal~~ Stormwater Management Practices Maintenance Agreement with the City; or,

(3) *Property owner association.* Property owner associations able to comply with the following provisions:

(a) The association provides a ~~binding legal~~ Stormwater Management Practices Maintenance Agreement ~~instrument~~ through which it assumes full responsibility for stormwater

management systems operation and maintenance.

(b) The association has sufficient powers to operate and maintain the stormwater management system, establish rules, assess members, contract for services, exist perpetually and, if dissolved, to provide alternative operation and maintenance services.

(c) ~~The association can provide a bond or other assurances of financial capability to operate and maintain services.~~

(D) *Maintenance Inspections.* ~~As part of the construction permit approval process, a construction inspection schedule shall be established to address critical project milestones. Under the approved inspection schedule, no work shall proceed until the City Engineer inspects and authorizes work to proceed beyond each schedule milestone. Any portion of the work that does not comply with the permit conditions shall be specified in writing by the City Engineer and promptly corrected by the responsible entity. For approved entities maintaining stormwater management systems not dedicated to the city, periodic inspections by the city to ensure continued maintenance of the stormwater management system after construction is complete will be established as conditions to the operation of the stormwater management system.~~ All privately owned stormwater management facilities shall be inspected near the end of the first year of operation by the party designated in the Stormwater Management Practices Agreement. A subsequent inspection shall be performed at the end of the fourth year to ensure functionality and compliance. Inspection reports shall be submitted to and maintained by the City Engineer for all stormwater systems and structures. Inspection reports for stormwater systems and structures shall include:

(1) The date of the inspection;

(2) The name of the inspector;

(3) The condition of:

(a) Pretreatment devices.

(b) Vegetation or filter media

(c) Spillways, valves, or other control structures.

(d) Embankments, slopes or safety benches.

(e) Inlet and outlet channels and structures.

(f) Sediment and debris accumulation in storage and forebay areas.

(g) Underground drainage.

(h) Provide cross sectional data showing the existing capacity of the detention pond for comparison to the minimum designed capacity in the approved final drainage report. Cross sectional data shall be at the end of the fourth year. If the designed capacity is not available the owner shall reestablish the original approved volume in the final drainage report.

(i) Any other item that could affect the proper function of the stormwater structures or systems.

(4) Description of the needed maintenance.

(5) Description of maintenance activities undertaken.

After the 2nd Inspection Report is received, the City Engineer will make a determination whether subsequent Inspection Reports will be required to be submitted based upon the stabilization of the site and the condition of the stormwater systems.

(E) *Right-of-Entry for Inspection.* The Stormwater Management Maintenance Agreement shall provide for the City Engineer or designee to enter the property at reasonable times and in a reasonable manner for the purpose of inspecting stormwater systems and structures.

(F) *Failure to Maintain.* If a responsible person fails or refuses to meet the requirements of the inspection and maintenance agreement the City shall give written notice requesting corrective action. If the conditions described in the Failure to Maintain notice are not corrected within 10 days after such notice is given, the mayor, or his duly authorized representative, is hereby authorized to enter upon the property and do whatever is necessary to correct or remove the conditions described, in the notice. The costs of correcting said conditions shall be charged to the owner or owners of the property and the city shall have a lien against such property for such costs.

(1) *Enforcement of the Lien.* The lien herein provided for may be enforced and collected in either one of the following manners:

(a) The lien may be enforced at any time within 18 months after work has been done, by an action in circuit court; or

(b) The amount of the lien herein provided may be determined at a hearing before the City Council held after 30 days written notice by certified mail to the owner or owners of the property, if the name and whereabouts of the owner or owners be known, and if the name of the owner or owners cannot be determined, then only after publication of notice of such hearing in a newspaper having a bona fide circulation in Washington County for one insertion per week for four consecutive weeks; the determination of the City Council shall be subject to appeal by the property owner in circuit court; and the amount so determined at said hearing, plus ten percent penalty for collection, shall be by the City Council certified to the tax collector of the county, and by him placed on the tax books as delinquent taxes, and collected accordingly, and the amount, less three percent thereof, when so collected shall be paid to the city by the county tax collector.

(c) In case the owner of any lot or other real property is unknown or his whereabouts is not known or he is a nonresident of this state, then a copy of the written notice hereinabove referred to shall be posted upon the premises and before any action to enforce such lien shall be had, the City Clerk shall make an affidavit setting out the facts as to unknown address or whereabouts or non-residence, and thereupon service of the publication as now provided for by law against nonresident defendants may be had, and an attorney ad litem may be appointed to notify the defendant by registered letter addressed to his last known place of residence if same can be found.

(G) Removal and modification of Stormwater Systems and Structures. Stormwater systems and structures may only be modified or removed with the approval of the City Engineer, who shall determine the whether the stormwater system or structure does not function as a part of the stormwater management system. The applicant may be required to provide supporting data and calculations that justify the removal of the stormwater systems or structures.

(Code 1991, §163.09; Ord. No. 3895, §1, 6-20-95; Ord. No. 4100, §2 (Ex. A), 6-16-98; Ord. 4920, 9-05-06)

Cross reference(s)--Enforcement, Ch., 153; Appeals, Ch. 155, Variances, Ch. 156; Bonds and Guarantees, Ch. 158; Fees, Ch. 159.

170.09 Drainage Permit Processing

Procedure for processing of permit applications shall be as follows:

(A) *Application.* Stormwater management, drainage, and erosion control permit applications shall be submitted to the city for review, processing, and approval. Applicants may schedule a pre-application conference with the city to discuss a proposed project before submitting the application.

(B) *Fee.* A nonrefundable permit application fee shall be paid when the application is submitted to help cover the cost of the plan review, administration and management of the permitting process and inspection of project implementation and operation.

(C) *Issuance.* If the City Engineer determines that the permit application submittal is in compliance with all provisions of this chapter, a permit may be issued. If the City Engineer determines that the permit submittal does not conform with all provisions of this chapter, permit issuance shall be denied and a written statement as to the reasons for the denial shall be provided to the applicant.

(Code 1991, §163.10; Ord. No. 3895, §1, 6-20-95; Ord. No. 4100, §2 (Ex. A), 6-16-98; Ord. 4920, 9-05-06)

170.10 ~~11~~ Stormwater Discharges From Construction Activities

(A) *General Requirements for Construction Sites.*

(1) *Construction Site.* A construction site is a site with activity that would result in the creation of a new stormwater management system, including the building, assembling, expansion, modification, or alteration of the existing contours of the property; the erection of buildings or other structures, any part thereof; or land clearing.

(2) *Owner Responsibility.* The owner of a site of construction activity shall be responsible for compliance with the requirements of this chapter.

(3) *Erosion And Sediment Control.* Best Management Practices (BMPs) shall be implemented to prevent the release of airborne dust and waterborne sediment from construction sites. Disturbed areas shall be minimized, disturbed soil shall be managed and construction site entrances shall be managed to prevent sediment tracking. Streets and storm inlets must be kept clean at all times and free of loose rock, mud, debris and trash. Specific inlet protection measures may be necessary, as long as they do not interfere with vehicular traffic. Mud on streets must be physically removed and not washed into inlets.

~~(a) *1&2 Family Residential and Sites under One Acre.* All residential lots must maintain properly installed erosion and sediment control measures (silt fences, hay bales, erosion control blankets, etc.) from the beginning of construction until slope stabilization and/or vegetation is established in order to prevent silt and sediment from going offsite or into the street. Erosion control measures may be temporarily moved out of the way for excavation and other grading activities, but must be replaced or modified within 24 hours.~~

(4) ~~*All Other*~~ *Construction Sites Requiring Storm Water Pollution Prevention Plans.* Erosion and sediment control systems must be installed and maintained per a state approved Storm Water Pollution Prevention Plan before the beginning of construction and until slope stabilization and/or vegetation is established. For sites between 1 and 5 acres, the SWPPP must be onsite at all times. For sites over 5 acres, the NOI and the SWPPP must be onsite at all times.

(5) ~~*Construction Exits Entrances.* If driveways and approaches are not poured within 3 working days of pouring the foundation, then~~ A stabilized rock exit is required on construction sites. Rock ~~entry~~ exits must be at least 20' wide by 20' long (1 & 2 family residential) or 50' long (all other construction sites) by 6" thick stabilized rock having a minimum average diameter of 3". If there is an existing curb, loose material such as fill dirt or gravel shall not be used to ramp up to it from the street. Temporary wooden ramps in front of curbs are acceptable.

(6) *Concrete Truck Wash Areas.* No washing of concrete trucks or chutes is allowed except in specific concrete wash pits located onsite. Proper runoff and erosion controls must be in place to retain all concrete wash water.

(7) *Dewatering.* All rainwater pumped out of sumps and depressions on construction sites should be clear and free of sediment, and must discharge to a sedimentation pond, sediment bag, or settling tank in such a manner as to not cause additional erosion problems.

(8) *Storage of Materials.* Public streets and sidewalks shall not be used for temporary storage of any containers or construction materials, especially loose gravel and topsoil. In addition to on-street storage being a violation of this chapter, all liability for any accidents and/or damages due to such storage will be the responsibility of the owner of the stored materials.

(9) ~~*Dirt and Topsoil Storage.* All uncovered soil or dirt storage piles should be located more than 25 feet from a roadway or drainage channel. If these piles remain for 15 or more days, then their surfaces must be stabilized. If the piles will be in place for less than 15 days, then their perimeters must be surrounded by appropriately installed erosion control devices such as silt fences or straw bales. Dirt or soil storage piles located less than 25 feet from the road and in place for 15 or more days must be covered with tarps or other control. If the piles will be in place for less than 15 days, then their perimeters must be surrounded by silt fence or straw bales. Storm drain inlets must be protected from potential erosion from near-street storage piles by silt fence or other appropriate barriers.~~

Dirt and Topsoil Storage. All storage piles of soil, dirt or other building materials (e.g. sand) shall be located more than 25 feet from a roadway, drainage channel or stream (from top of bank), wetland, and stormwater facility. The City Engineer may also require storage piles to be located up to fifty (50) feet from a drainage channel or stream, as measured from the top of the bank to the stockpile, for established TMDL water bodies; streams listed on the State 303(d) list; an Extraordinary Resource Water, Ecologically Sensitive Waterbody, and/or Natural and Scenic Waterbody, as defined by Arkansas Pollution Control and Ecology Commission Regulation No. 2; and/or any other uses at the discretion of the City Engineer.

Topsoil piles surfaces must be immediately stabilized with appropriate stabilization measures. Stabilization practices may include: temporary seeding (i.e. annual rye or other suitable grass), mulching, and other

DRAFT

appropriate measures. Sediment control measures such as silt fence shall be provided immediately for stockpiles and remain in place until other stabilization is in place. Storm drain inlets must be protected from potential sedimentation from storage piles by silt fence or other appropriate barriers.

(10) *Franchise and Private Utilities.* The property owner or main contractor onsite will be responsible for restoring all erosion and sediment control systems and public infrastructure damaged or disturbed by underground private or franchise utility construction such as water and sewer service leads, telephone, gas, cable, etc. Erosion and sediment control systems must be immediately restored after each utility construction.

(11) *Post-Construction Compliance.* Upon completion of permitted construction activity on any site, the property owner and subsequent property owners will be responsible for continued compliance with the requirements of this chapter in the course of maintenance, reconstruction or any other construction activity on the site.

(B) *Construction Sites Requiring an Approved Stormwater Pollution Prevention Plan (SWPPP) ~~SWP3~~.* For all construction sites where construction on a site will disturb soil or remove vegetation on one (1) or more acres of land during the life of the construction project, a Stormwater Pollution Prevention Plan (SWPPP) for the project must be implemented by the construction site owner as follows:

(1) The site owner ~~/developer/builder~~ bears the responsibility for implementation of the SWPPP ~~SWP3~~ and notification of all contractors and utility agencies on the site.

(C) *Stormwater Pollution Prevention Plans.* Preparation and implementation of Stormwater Pollution Prevention Plans for construction activity shall comply with the following:

(1) Implementation

(a) *Installation and Maintenance.* BMPs shall be installed and maintained by qualified persons. The owner ~~/developer/builder~~ or their representative shall ~~be able to~~ provide upon the City Engineer's request a copy of the SWPPP ~~SWP3~~ on site and shall be prepared to respond to unforeseen maintenance requirements of specific BMPs.

(b) ~~*Inspection.* The owner/developer/builder or their representative shall inspect all BMP's at least once every 14 days and within 24 hours after a rainfall of one half of an inch or more as measured at the site or generally reported in the Fayetteville area.~~

A qualified inspector (provided by the owner/developer/builder) shall inspect disturbed areas of the construction site and areas used for storage of materials that are exposed to precipitation that have been finally stabilized, and locations where vehicles enter or exit the site. BMPs must be observed to ensure proper operation. Inspectors must inspect for evidence of, or the potential for, pollutants entering the stormwater conveyance system. Discharge locations must be inspected to determine whether BMPs are effective in preventing significant impacts to waters of the State, where accessible. Where discharge locations are inaccessible, nearby downstream locations must be inspected to the extent that such inspections are practicable. The inspections must be conducted at least once every seven (7) calendar days and within 24 hours of the end of a storm that is 0.5 inches or greater as measured at the site or generally reported in the vicinity of the site. A rain gauge must be maintained on-site.

A report shall be prepared for each inspection summarizing the scope of the inspection; name(s), title(s) and qualifications of personnel making the inspection; the date of the inspection; amount of rainfall and days since last rain event, BMPs on-site; observations relating to whether BMPs are in working order and whether maintenance is required (when scheduled and completed); the locations and dates when major construction activities begin, occur, or cease; and the signature of the inspector. The reports shall be retained as part of the stormwater pollution prevention plan for at least three (3) years from the date the site is finally stabilized and shall be made available upon request to the City.

(c) *Modifications.* Based on inspections performed by the owner~~/developer/builder~~ or by authorized City personnel, modifications to the SWPPP ~~SWP3~~ will

DRAFT

be necessary if at any time the specified BMPs do not meet the objectives of this chapter. In this case, the owner/developer/builder or authorized representative shall meet with authorized City personnel to determine the appropriate modifications. All modifications shall be completed within seven (7) days of the referenced inspection, except in circumstances necessitating more timely attention, and shall be recorded on the owner's copy of the SWPPP ~~SWP3~~.

(D) *Requirements for Utility Construction*

(1) Utility agencies shall be responsible for compliance with the requirements this chapter.

(2) Utility agencies shall develop and implement Best Management Practices (BMPs) to prevent the discharge of pollutants on any site of utility construction within the City. In addition, the City may adopt and impose BMPs on utility construction activity.

(3) Utility agencies shall implement BMPs to prevent the release of sediment from utility construction sites. Disturbed areas shall be minimized, disturbed soil shall be managed and construction site entrances shall be managed to prevent sediment tracking. Excessive sediment tracked onto public streets shall be removed immediately.

(4) Prior to entering a construction site or subdivision development, utility agencies shall have obtained from the owner a copy of any SWPPPs ~~SWP3's~~ for the project. Any disturbance to BMPs resulting from utility construction shall be repaired immediately by the utility company in compliance with the SWPPP ~~SWP3~~.

(Ord. 4920, 9-05-06)

170.11 Preliminary Plat, Lot Requirements

(A) *Preliminary Plats.* Preliminary Plats shall include a master drainage plan for each lot related to the proposed infrastructure and adjacent lots.

(B) *Preliminary Plats for Residential Subdivisions.* Preliminary Plats for residential subdivisions shall provide detailed drainage information including flow arrows and design spot elevations including the proposed finish floor elevation meeting the Arkansas Fire Prevention Code for building safety regulations for positive drainage of each lot.

(C) *Rear lot drainage easements.* Rear lot drainage easements for nonstructural grassed swales shall not overlap utility easements with above ground structures, ie, electric transformers, gas meters, communication junctions, etc.

(D) *Final Plat.* The Final Plat shall include the approved master drainage plan to be filed as a supplemental document. The scale shall be legible and approved by the City Engineer.

170.12 1 & 2 Family Residential Requirements

(A) *1&2 Family Residential and Sites under One Acre.* All residential lots must maintain properly installed erosion and sediment control measures from the beginning of construction until slope stabilization and/or vegetation is established in order to prevent silt and sediment from going offsite or into the street.

(B) A building permit application shall contain sufficient site drainage information to determine whether the project complies with the requirements of this chapter.

(C) If the Final Plat of the Subdivision, in which the proposed building is located, includes an approved master drainage plan, this plan shall be included in the building permit application and the individual lot drainage plan shall follow the master drainage plan.

170.13 ~~10~~ Stormwater Pollution Prevention

(A) *Prohibitions*

(1) Illicit discharges are prohibited. An illicit discharge is a storm drain that has measurable flow containing pollutants and/or pathogens. No person shall discharge anything but uncontaminated stormwater, into the storm drainage system. Common stormwater contaminants include trash, yard waste, wastewater, oil, petroleum products, cleaning products, paint products, hazardous waste and sediment.

(2) Illicit connections are prohibited. Illicit connections are any drain or conveyance which allows an illicit discharge to enter the storm drainage system. This prohibition includes illicit connections made in the past, regardless of whether the connection was permissible at the time of connection.

(3) No person shall connect a line conveying sanitary sewage, domestic sewage or

industrial waste, to the storm drainage system, or allow such a connection to continue.

(B) *Exemptions.* The following non-stormwater discharges are acceptable and not a violation of this chapter:

(1) A discharge authorized by an NPDES permit other than the NPDES permit for discharges from the MS4;

(2) Uncontaminated waterline flushing and other infrequent discharges from potable water sources;

(3) Infrequent uncontaminated discharge from landscape irrigation or lawn watering;

(4) Discharge from the occasional non-commercial washing of vehicles within zoned residential areas;

(5) Uncontaminated discharge from foundation, footing or crawl space drains, sump pumps and air conditioning condensation drains;

(6) Uncontaminated groundwater;

(7) Diverted stream flows and natural riparian habitat or wetland flows;

(8) A discharge or flow of fire protection water that does not contain oil or hazardous substances or materials.

(9) Any other non-stormwater discharge determined by the City Engineer to meet the standards and objectives of this chapter.

(C) *Requirements Applicable to Certain Dischargers*

(1) *Private Drainage System Maintenance.* The owner of any private drainage system shall maintain the system to prevent or reduce the discharge of pollutants. This maintenance shall include, but is not limited to, sediment removal, bank erosion repairs, maintenance of vegetative cover, and removal of debris from pipes and structures.

(2) *Minimization of Irrigation Runoff.* Concentrated flow of irrigation water to the storm drainage system is prohibited. Irrigation systems shall be managed to reduce the discharge of water from a site.

(3) *Cleaning of Paved Surfaces Required.* The owner of any paved parking lot, street or drive shall clean the pavement as required to prevent the buildup and discharge of pollutants. The visible buildup of mechanical fluid, waste materials, sediment or debris is a violation of this chapter. Paved surfaces shall be cleaned by dry sweeping, wet vacuum sweeping, collection and treatment of wash water or other methods in compliance with this Code. Material shall not be swept or washed into the storm drainage system. This section does not apply to pollutants discharged from construction activities.

(4) *Maintenance of Equipment.* Any leak or spill related to equipment maintenance in an outdoor uncovered area shall be contained to prevent the potential release of pollutants. Vehicles, machinery and equipment must be maintained to reduce leaking fluids.

(5) *Materials Storage.* In addition to other requirements of this Code, materials shall be stored to prevent the potential release of pollutants. The uncovered outdoor storage of unsealed containers of hazardous substances is prohibited.

(6) *Pesticides, Herbicides and Fertilizers.* Pesticides, herbicides and fertilizers shall be applied in accordance with manufacturer recommendations and applicable laws. Excessive application shall be avoided.

(7) *Open Drainage Channel Maintenance.* Every person owning or occupying property through which an open drainage channel passes shall prevent trash, debris, excessive vegetation, and other obstacles from their property from entering the drainage channel.

(D) *Release Reporting and Cleanup.* Any person responsible for a release of materials which are or may result in illicit discharges to the storm drainage system shall take all necessary steps to ensure the discovery, containment, abatement and cleanup of such release. In the event of such a release of a hazardous material, said person shall comply with all state, federal, and local laws requiring reporting, cleanup, containment, and any other appropriate remedial action in response to the release.

(E) *Authorization to Adopt and Impose Best Management Practices.* The City may adopt and impose a Best Management Practices Manual and requirements identifying Best Management Practices for any activity, operation, or facility, which may cause a discharge of pollutants to the storm drainage system. Where specific BMPs are required, every person undertaking such activity or operation, or owning or operating such facility shall implement and maintain these BMPs at their own expense.

DRAFT

(Ord. No. 4855, 4-18-06; Ord. 4920, 9-05-06)

170.14-170.99 Reserved

DRAFT

City of Fayetteville Staff Review Form

City Council Agenda Items
and
Contracts, Leases or Agreements

~~6/15/2010~~ 7-6-10
City Council Meeting Date
Agenda Items Only

Leif Olson		Development Services
Submitted By	**Division**	**Department**

Action Required:

ADM 10-3567 Submitted by Staff for revisions to Fayetteville Unified Development Code Section 171.13: Sidewalk, Driveway and Trail Specifications to amend sidewalk and driveway approach construction standards.

	$ -	
Cost of this request	Category / Project Budget	Program Category / Project Name
	$ -	
Account Number	Funds Used to Date	Program / Project Category Name
	$ -	
Project Number	Remaining Balance	Fund Name

Budgeted Item ☐ **Budget Adjustment Attached** ☐

Department Director — 05.27.2010 Date

City Attorney — May 28, 2010 Date

Finance and Internal Services Director — 5-28-2010 Date

Chief of Staff — 6-1-10 Date

Mayor — 6/1/10 Date

Previous Ordinance or Resolution # _____

Original Contract Date: _____

Original Contract Number: _____

Received in City Clerk's Office — ENTERED 5/27/10 Kim

Received in Mayor's Office — ENTERED 5/28/10

Comments:

Fayetteville
ARKANSAS
www.accessfayetteville.org

THE CITY OF FAYETTEVILLE, ARKANSAS
DEPARTMENT CORRESPONDENCE

CITY COUNCIL AGENDA MEMO

To: Mayor and City Council

Thru: Jeremy Pate, Development Services Director
Chris Brown, City Engineer

From: Leif Olson, Associate Planner

Date: May12, 2010

Subject: Unified Development Code amendments to Chapters 171.13 Sidewalk , Driveway and Trail Specifications

PROPOSAL:

The Development Services Division is bringing forward an ordinance to amend the Unified Development Code Chapter 171: Streets and Sidewalks to amend and clarify sidewalk and driveway approach construction standards. The City of Fayetteville last amended this section of the Unified Development Code Chapter 171: Streets and Sidewalks in 1998. The proposed amendments will update construction standards in order to strengthen and clarify the current requirements. Planning staff worked closely with the Engineering Division and the City's Sidewalk Administrator on developing these standards. Primarily the changes deal with construction standards and methods such as:

- Sidewalk concrete thickness, compressive strength, reinforcement, etc. Staff proposes to increase the concrete compressive strength standard from 3,000 psi to 3,500 psi, and to increase the thickness of the concrete pour. The additional thickness of driveway approaches is recommended to provide additional resistance to cracking and failure of the approach due to settlement of the base below the concrete and due to impact loads from vehicles that other parts of the driveway are not subjected to.
- Requirement for a sidewalk setback or "shy" distance from vertical obstacles such as walls or fences.
- Sidewalk and driveway approach elevations and cross-slopes.
- Expansion joints and saw cuts specifications and spacing requirements.
- Crosswalk ramp specifications.

The Planning Commission reviewed and tabled this ordinance amendment at its May 10, 2010 meeting. The Planning Commission amended section 171.13(A)(2) by changing the effective sidewalk width from 5 feet to 4 feet and forwarded this item with a recommendation for approval to the City Council by vote of 7-0-0.

RECOMMENDATION:

The Development Services Division recommends approval of this ordinance.

BUDGET IMPACT:

No budget impact.

ORDINANCE NO. _____

AN ORDINANCE AMENDING THE UNIFIED DEVELOPMENT CODE CHAPTER 171: STREETS AND SIDEWALKS TO AMEND AND CLARIFY SIDEWALK AND DRIVEWAY APPROACH CONSTRUCTION STANDARDS.

WHEREAS, the construction standards for sidewalks and driveway approaches located in City owned right-of-way was last amended in 1998, and

WHEREAS, the City of Fayetteville recognizes that changes in sidewalk construction standards will improve the durability and life of sidewalks and driveway approaches, and

WHEREAS, the City of Fayetteville recognizes that improved construction standards will reduce the need for sidewalk replacement in the future,

NOW, THEREFORE, BE IT ORDAINED BY THE CITY COUNCIL OF THE CITY OF FAYETTEVILLE, ARKANSAS:

Section 1. That the City Council of the City of Fayetteville, Arkansas hereby amends the Unified Development Code Chapter 171: Streets and Sidewalk by repealing and replacing in its entirety §171.13(A), 171.13(B) and 171.13(C), as shown in "Exhibit A" attached hereto and made a part hereof.

PASSED and **APPROVED** this ____ day of ____, 2010.

APPROVED: ATTEST:

By: _____
LIONELD JORDAN, Mayor

By: _____
SONDRA E. SMITH, City Clerk

"Exhibit A"

171.13 Sidewalk, Driveway and Trail Specifications

(A) *Sidewalks.*

(1) *Grades; establishment of property lines.* All sidewalks, access ramps, and driveway approaches shall be constructed in grades as approved by the City Engineer. It shall be the responsibility of the owner to establish property lines by competent survey at his/her own expense.

(2) *Minimum width of sidewalks.* The minimum width of sidewalks shall follow the guidelines of the Master Street Plan, of the Comprehensive Land Use Plan. In all cases, the effective width of the sidewalk shall be a minimum of 4 feet. Effective sidewalk width is the actual sidewalk width, less:

A shy distance of 2 feet where vertical barriers (walls, fences, signs, etc) greater than 3.5 feet in height are adjacent to the sidewalk and extend more than 4 feet in length parallel to the sidewalk. A shy distance of 1 foot is required for all other fixed obstacles.

(3) *Sidewalk distances from the curb.* The sidewalk setback distance from the curb shall follow the guidelines of the Master Street Plan, of the Comprehensive Land Use Plan.

(4) *Minimum distance between sidewalk and slopes.* There shall be a minimum of one (1) foot between the sidewalk and the beginning of a slope as shown on the typical section detail.

(5) *Cement-concrete requirements.* All sidewalks, access ramps, and concrete driveway approaches shall be constructed of a portland cement concrete mixture that includes at least 5.5 bags of cement per cubic yard and contains 4 to 7 percent air entrainment and that will produce a concrete of a compressive strength of 3,500 pounds per square inch after 28 days set under standard laboratory methods.

(6) *Minimum thickness of sidewalks and driveway approaches.*

(a) *Sidewalks.* The minimum thickness of sidewalks shall be four (4) inches. Any fill materials required for residential or commercial sidewalks shall consist of approved compacted material.

(b) *Residential driveway approaches.* The minimum thickness of residential driveway approaches shall be six (6) inches with four inches of compacted base material or six-inch by six-inch 10-gauge reinforcing steel mesh.

(c) *Commercial driveway approaches.* The minimum thickness of commercial driveway approaches shall be six (6) inches with six (6) inches of compacted base material or six-inch by six-inch 10-gauge reinforcing steel mesh.

(7) *ADA guidelines.* Sidewalks shall conform to ADA guidelines.

(8) *Continuous through driveway approach.* Sidewalks shall be continuous through driveways with an expansion joint at the edge of the sidewalk opposite the street.

(9) *Edge adjacent to street.* The sidewalk edge adjacent to the street shall have at least one (1) inch deep grooved joint mark (cannot be a saw cut, however it can be a cold joint) to clearly define the sidewalk through the driveway and approach.

(10) *Sidewalk elevation.* The back of sidewalk elevation shall be such that the slope from the back of sidewalk to the top of curb is 2%, unless otherwise approved by the City Engineer. This elevation shall be continuous through the driveway approach.

(11) *Cross Slope.* Sidewalk cross slopes shall be a minimum of one (1) percent and a maximum of two (2) percent. Sidewalks that are to be constructed adjacent to the curb shall be so located at their intersection with the driveway approach the ADA requirement of the two (2) percent maximum cross slope is met.

(12) *Joint material.* Wood shall not be acceptable in sidewalks for expansion joints. The joint material shall be asphalt impregnated fiberboard meeting the requirements of AASHTO M213, or other joint material meeting the requirements of the latest version of the Arkansas State Highway and Transportation Department Standard Specifications.

(13) *Expansion joint.* Full depth expansion joints (four inches) shall be provided at intervals not greater than 50 feet, and where sidewalks abut drainage structures, retaining walls, building faces, and all other fixed objects. One-quarter depth (one inch) weakened plane joints, or saw-cut joints, shall be placed in sidewalk at regular intervals not greater than the width of the sidewalk. Maximum joint spacing shall not be greater than two times the thickness of the sidewalk. Saw joints shall be filled with self leveling sealant such as Sonneborn SL1 or equivalent.

(14) *Inspection.* All sidewalks and curb cuts made for driveway approaches require an inspection prior to the concrete placement.

(15) *Materials.* The material used for sidewalk construction shall be Portland cement concrete having a broom finish. The use of other materials must have the approval of the Sidewalk/ADA Administrator or the City Engineer.

(16) *Edges.* All sidewalks shall have one-half (1/2) inch rolled edges.

(17) *Removal/replacement.* Removal and replacement of broken sidewalks require vertical saw-cuts on both ends of the sidewalk being replaced.

(18) *Curing compound.* All sidewalks and driveway approaches require the application of a concrete curing compound or the concrete is to be kept moist for seven (7) days.

(B) *Driveway approaches.*

(1) *Curb removal.* Curb, if existing, shall be removed for full width of the drive approach.

(2) *Vertical curb cut.* Vertical curb cutting along the flow-line of the gutter is allowed.

(3) *No vertical curb cut.* If no vertical curb cut is made, complete curb and gutter removal is required.

(4) *Concrete removal.* All concrete to be removed shall be saw-cut.

(5) *Driveway approach.* The area remaining between the sidewalk and the flow-line of the gutter, called the approach to the driveway, shall slope up to the elevation of the sidewalk.

(6) Broken edges of saw-cuts. Broken edges of saw-cuts caused by demolition require a new saw-cut.

(C) *Access ramps.*

(1) *ADA requirements.* Access ramps shall conform to ADA requirements, including detectable warning devices such as truncated domes.

(2) *Sidewalk intersections.* Access ramps shall be installed at all sidewalk intersections with the street.

(3) *Raised crosswalk.* The raised or built-up access ramp shall not be installed on public streets without the approval of the City engineer.

(4) *Minimum width.* The minimum width of a curb ramp shall be Forty-eight (48) inches. Sixty (60) inches is recommended, exclusive of flared sides.

(5) *Slope.* The slope of the ramp shall not be greater than 8.33% (1:12).

(6) *Slope of flared sides.* The slope of the flared sides shall not be greater than 10% (1:10).

(7) *Broom finish.* Access ramps shall have a broom finish.

"Exhibit A"
MARK-UP

171.13 Sidewalk, Driveway and Trail Specifications

(A) *Sidewalks.*

(1) *Grades; establishment of property lines.* All sidewalks, ~~streets curbing and guttering~~ **access ramps**, and driveway approaches shall be constructed in grades as ~~established~~ **approved** by the **City** ~~official~~ **Engineer**. It shall be the responsibility of the owner to establish property lines by competent survey at his/her own expense.

(2) *Minimum width of sidewalks.* The minimum width of sidewalks shall follow the guidelines of the Master Street Plan, of the Comprehensive Land Use Plan. In all cases, the effective width of the sidewalk shall be a minimum of ~~5~~ **4** feet. Effective sidewalk width is the actual sidewalk width, less:

A shy distance of 2 feet where vertical barriers (walls, fences, signs, etc) greater than 3.5 feet in height are adjacent to the sidewalk and extend more than 4 feet in length parallel to the sidewalk. A shy distance of 1 foot is required for all other fixed obstacles.

(3) *Sidewalk distances from the curb.* The sidewalk setback distance from the curb shall follow the guidelines of the Master Street Plan, of the Comprehensive Land Use Plan.

(4) *Minimum distance between sidewalk and slopes.* There shall be a minimum of one (1) foot between the sidewalk and the beginning of a slope as shown on the typical section detail.

(5) *Cement-concrete requirements.* All sidewalks, ~~street curbing and guttering~~ **access ramps**, and concrete driveway approaches shall be constructed of a portland cement concrete mixture **that includes at least 5.5 bags of cement per cubic yard and contains 4 to 7 percent air entrainment and that will produce a concrete of a compressive strength of** ~~3,000~~ **3,500** pounds per square inch after 28 days set under standard laboratory methods.

(6) *Minimum thickness of sidewalks and driveway approaches.*

(a) *Sidewalks.* The minimum thickness of sidewalks shall be four (4) inches. Any fill materials required for residential or commercial sidewalks **shall consist** of approved compacted ~~base~~ material.

(b) *Residential driveway approaches.* The minimum thickness of residential driveway approaches shall **be** ~~four (4)~~ **six (6)** inches with four inches of compacted base material or six-inch by six-inch 10-gauge reinforcing steel **mesh**.

(c) *Commercial driveway approaches.* The minimum thickness of commercial driveway approaches shall be six (6) inches with six (6) inches of compacted base material or six-inch by six-inch 10-gauge reinforcing steel **mesh**.

(7) *ADA guidelines.* Sidewalks shall conform to ADA guidelines.

(8) *Continuous through driveway* ***approach.*** Sidewalks shall be continuous through driveways with **an** ~~cold joint or~~ expansion joint at the edge of the sidewalk opposite the street.

(9) *Edge adjacent to street.* The sidewalk edge adjacent to the street shall have at least one (1) inch deep grooved joint mark (**cannot be a saw cut, however it** can be a cold joint) to clearly define the sidewalk through the driveway and approach.

(10) *Sidewalk elevation.* ~~The sidewalk elevation shall be two (2) percent above the top of the curb, sloping two percent towards the curb (one-fourth inch in each foot).~~ **The back of sidewalk elevation shall be such that the slope from the back of sidewalk to the top of curb is 2%, unless otherwise approved by the City Engineer**. This elevation shall be continuous through the driveway approach.

(11) ***Cross*** *Slope.* **Sidewalk cross slopes shall be a minimum of one (1) percent**

and a maximum of two (2) percent. Sidewalks that are to be constructed adjacent to the curb shall be so located at their intersection with the **driveway** approach ~~and the driveway~~ ~~that~~ the ADA requirement of the two (2) percent maximum ~~vertical~~ **cross** slope is met.

~~(12) *Driveway approach.* The area remaining between the sidewalk and the flow-line of the gutter, called the approach to the driveway, shall slope up to the elevation of the sidewalk.~~

(12) *Joint material.* Wood shall not be acceptable in sidewalks for expansion joints. The joint material **shall be asphalt impregnated fiberboard meeting the requirements of AASHTO M213, or other joint material meeting the requirements of the latest version of the Arkansas State Highway and Transportation Department Standard Specifications**. ~~the same as approved for AHTD sidewalk construction (AASHTO M 213).~~

(13) *Expansion joint.* Full depth expansion joints (four inches) shall be provided at intervals not greater than 50 feet, and where sidewalks abut drainage structures, retaining walls, building faces, and all other fixed objects. One-quarter depth (one inch) weakened plane joints, or saw-cut joints, shall be placed in sidewalk at regular intervals not greater than ~~10 feet apart~~ **the width of the sidewalk. Maximum joint spacing shall not be greater than two times the thickness of the sidewalk. Saw joints shall be filled with self leveling sealant such as Sonneborn SL1 or equivalent.**

(14) *Inspection.* All sidewalks and curb cuts made for driveway approaches require an inspection prior to the concrete ~~pour~~ **placement**.

(15) *Materials.* The material used for sidewalk construction shall be Portland cement concrete having a broom finish. The use of other materials must have the approval of the ~~sidewalk and trails coordinator~~ **Sidewalk/ADA Administrator or the City Engineer**.

(16) *Edges.* All sidewalks shall have one-half (1/2) inch rolled edges.

(17) *Removal/replacement.* Removal and replacement of broken sidewalks require vertical saw-cuts on both ends of the sidewalk being replaced.

(18) *Curing compound.* All sidewalks and driveway approaches require the application of a concrete curing compound or the concrete is to be kept moist for seven (7) days.

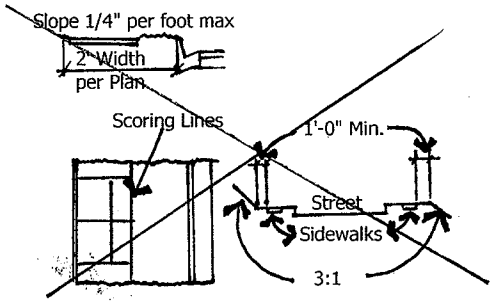

Sidewalk Details

(B) *Driveway approaches.* ~~(See: Illustration, Standard Driveway Approach-Residential)~~

(1) *Curb removal.* Curb, if existing, shall be removed for full width of the drive approach.

(2) ~~*Horizontal*~~ ***Vertical*** *curb cut.* ~~Horizontal~~ **Vertical** curb cutting along the flow-line of the gutter is allowed.

(3) *No* ~~*horizontal*~~ ***vertical*** *curb cut.* If no ~~horizontal~~ **vertical** curb cut is made, complete curb and gutter removal is required.

(4) *Concrete removal.* All concrete to be removed shall be saw-cut.

(5) ***Driveway approach.*** **The area remaining between the sidewalk and the flow-line of the gutter, called the approach to the driveway, shall slope up to the elevation of the sidewalk.**

(6) Broken edges of saw-cuts. Broken edges of saw-cuts caused by demolition require a new saw-cut.

~~(7) *Safety zones.* Safety zones between driveway approaches shall not be less than the distance designated for distances between curb cuts in the standards for street design. On streets of higher use designation than collector, the standards for collector streets shall apply. Curbs shall be installed to prohibit vehicle parking and access in safety zones. The barrier line nearest~~

~~the street or highway shall be on line with existing curbs, or established curb lines, but not less than 22 feet from the center of the pavement; provided the city official does not require a greater distance when needed to preserve the safety and utility of the street or highway, or provide conformance with proposed street or highway improvements. The curb cut for a driveway approach (other than for a single-family residential lot) shall be located a minimum of 122 feet from the nearest property line; curb cuts between driveway approaches on single-family residential lots shall be separated by a minimum of 10 feet. The curb cut for driveway approach on a single-family residential lot shall be located a minimum of five feet from the side property line; provided, this requirement shall not apply to a joint driveway (driveway approach providing access to two adjoining lots), or residential lots on the turning circle of a cul-de-sac.~~

~~(8) *Safety zones at intersections and corners.* No driveway approach shall be constructed less than the distance from the corner of a street or highway intersection designated in the standards for street design, provided the city official may require a greater distance between the corner and the driveway approach to preserve the safety of the street or highway; provided further the city may require the property owner to designate a driveway approach "for entrance only" or "for exit only" where more than one driveway approach provides access to the property in order to preserve the safety of the street or highway. On streets of a higher use designation than collector, the standards for distances between curb cuts for collector streets shall apply.~~

~~(9) *Variations.* The city official may grant variations where strict enforcement would be impractical due to circumstances unique to the individual property under consideration.~~

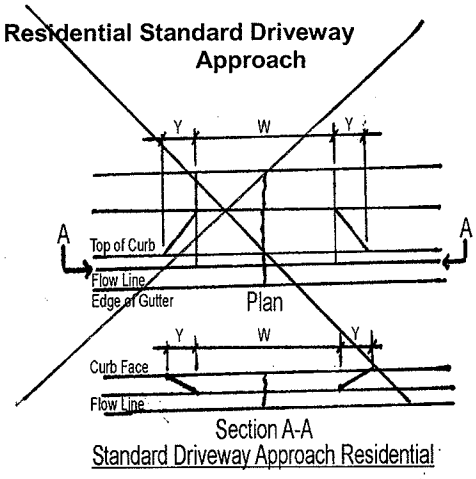

(C) *Access ramps.* ~~(See: Illustration guidelines: Fig. 11, and Fig. 12)~~

(1) *ADA requirements.* Access ramps shall conform to ADA requirements, **including detectable warning devices such as truncated domes**.

(2) *Sidewalk intersections.* Access ramps shall be installed at all sidewalk intersections with the street.

~~(3) *Parallel direction.* Access ramps shall be installed in a direct parallel direction to the sidewalk.~~

~~***Note** Therefore, many curb radii will require two access ramps.~~

(~~4~~**3**) *Raised* ~~*access ramp*~~ ***crosswalk***. The raised or built-up access ramp shall not be installed on public streets without the approval of the ~~street superintendent~~ **City engineer**.

(~~5~~**4**) *Minimum width.* The minimum width of a curb ramp shall be ~~36~~ **Forty-eight (48) inches**, ~~and 48~~ **sixty (60)** inches is recommended, exclusive of flared sides.

(~~6~~**5**) *Slope*. The slope of the ramp shall not be greater than 8.33% (1:12).

(~~7~~**6**) *Slope of flared sides.* The slope of the flared sides shall not be greater than 10% (1:10).

(~~8~~**7**) *Broom finish.* Access ramps shall have a broom finish.

Measurement of Curb Ramp Slopes

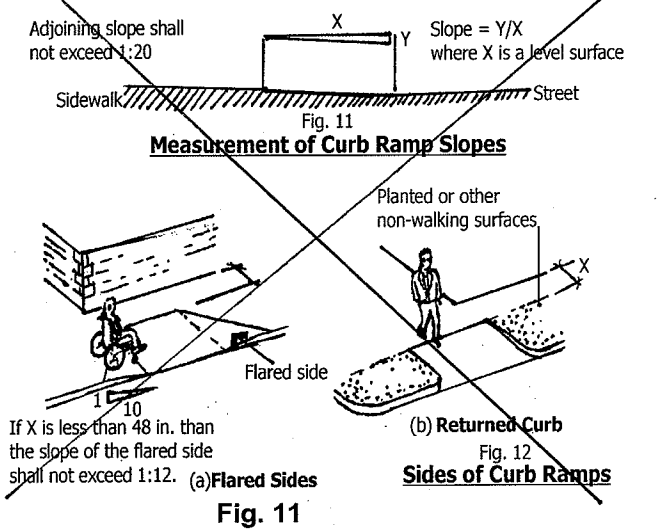

Fig. 11

Built-up Curb Ramp

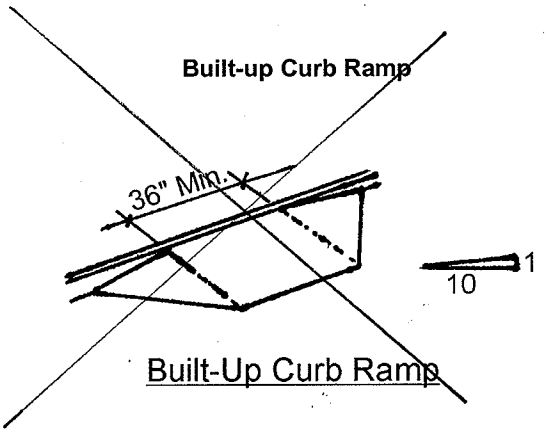

Fig. 12

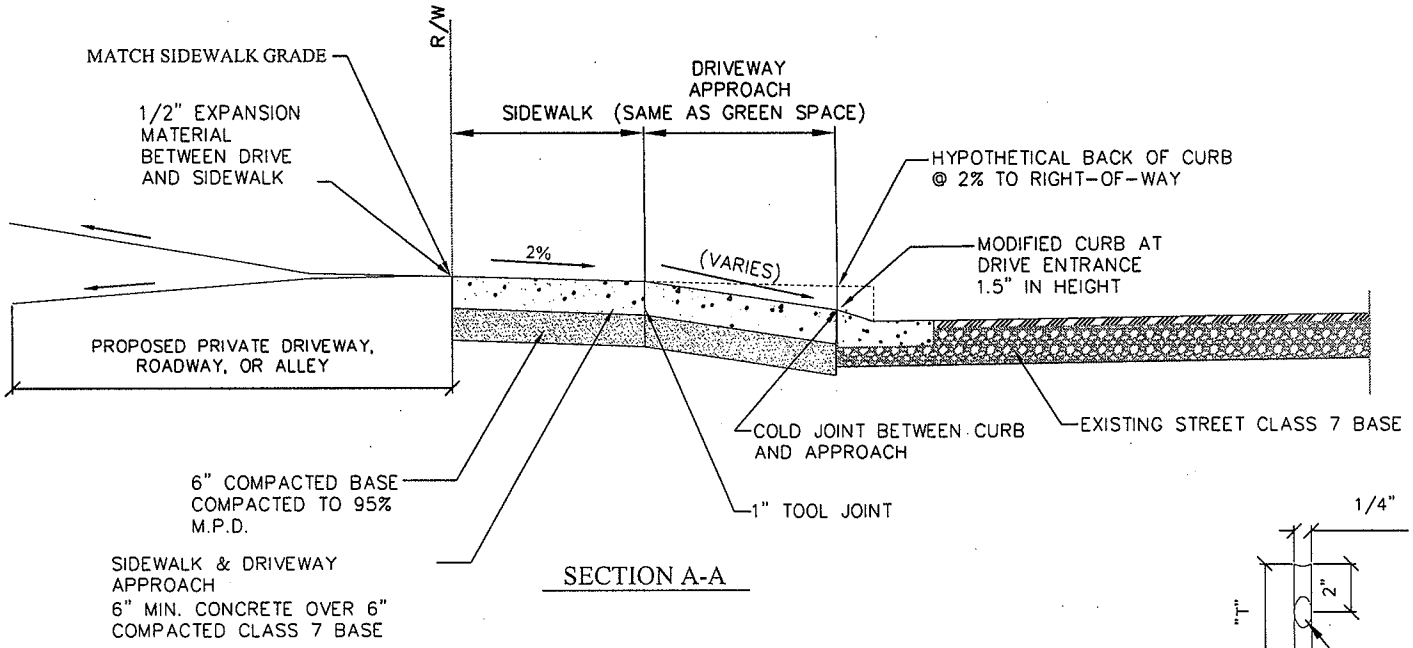

SECTION A-A

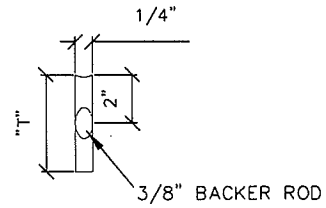

"T"=1/4 SLAB THICKNESS + 1/2"

JOINT SEALER DETAIL

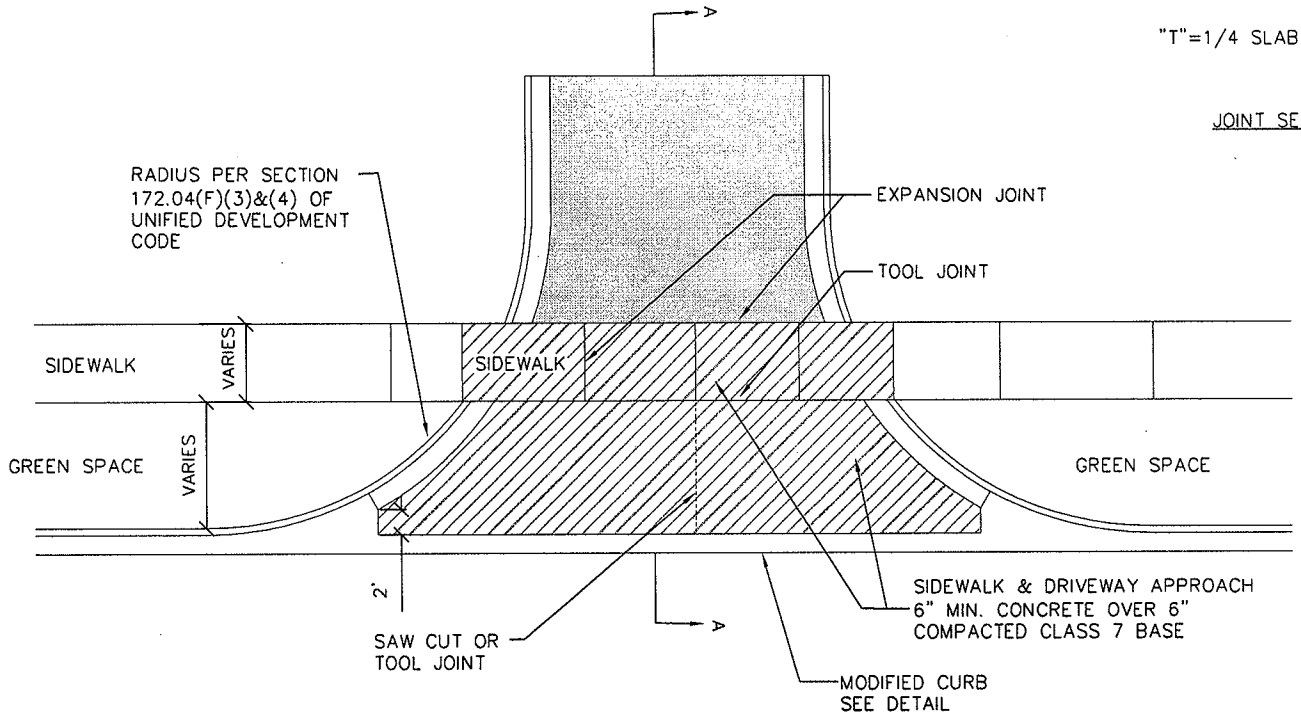

COMMERCIAL DRIVEWAY DETAIL

N.T.S.

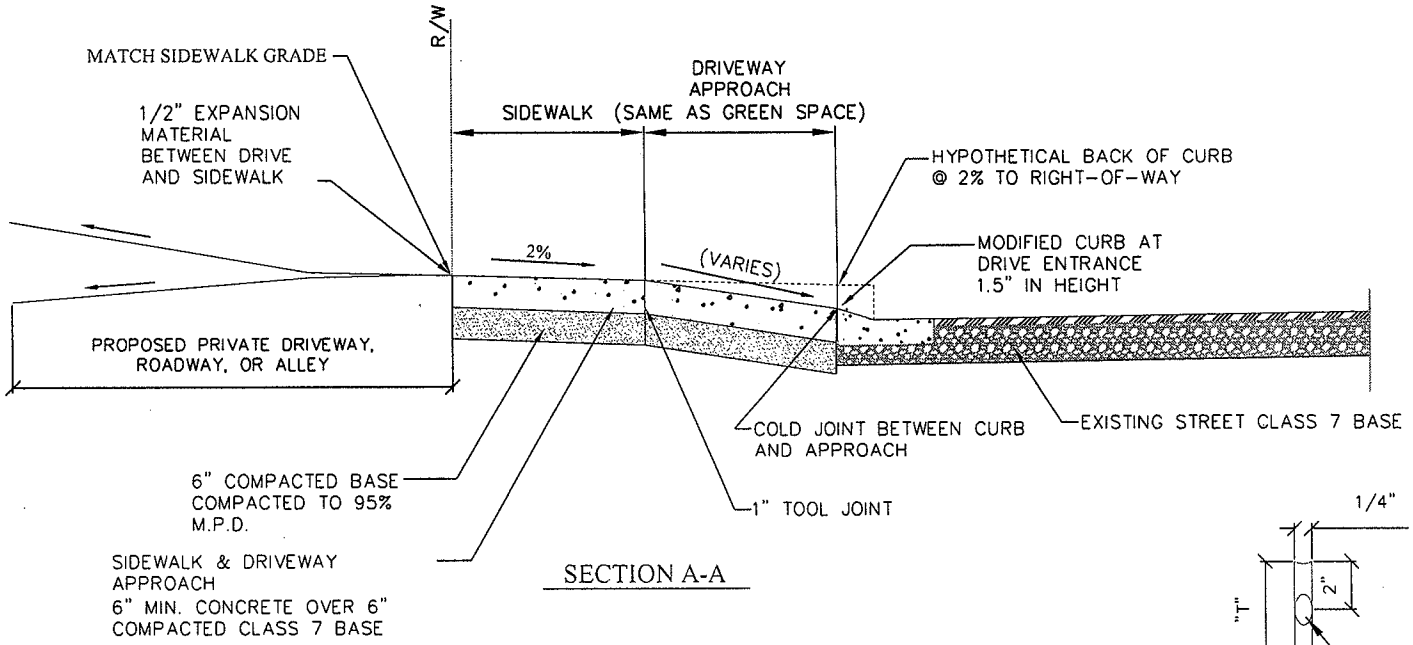

SECTION A-A

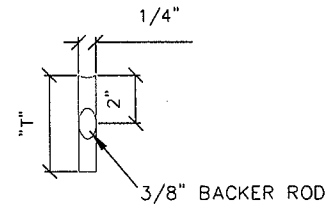

"T"=1/4 SLAB THICKNESS + 1/2"

JOINT SEALER DETAIL

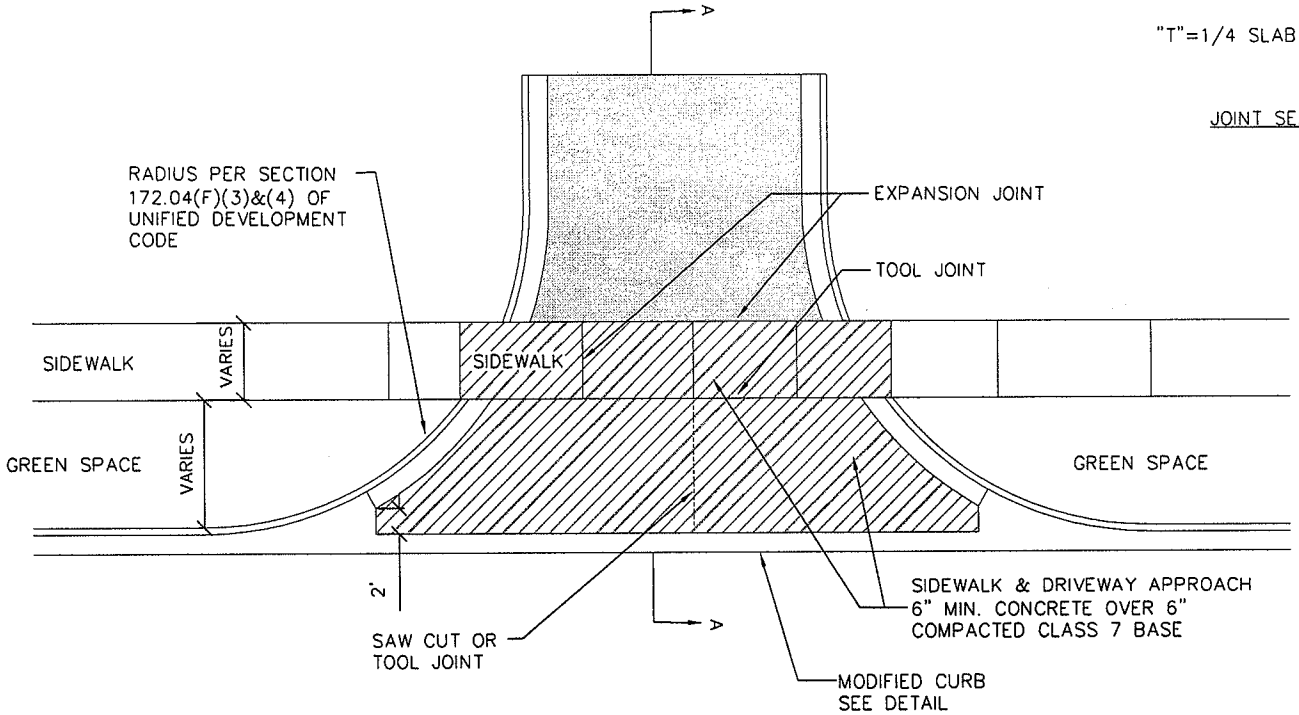

COMMERCIAL DRIVEWAY DETAIL

N.T.S.

EXHIBIT 11-6. TYPICAL FREE-FLOW WALKING SPEED DISTRIBUTIONS

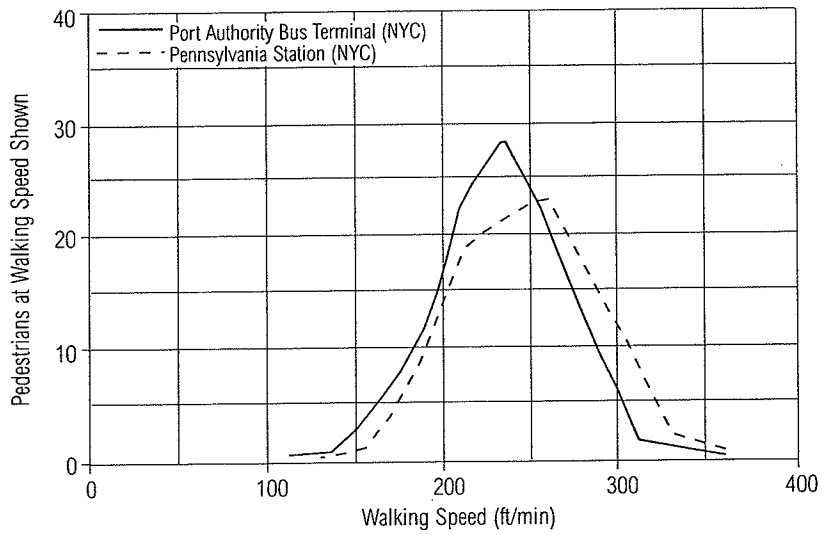

Source: Adapted from Fruin (*2*).

EFFECTIVE WALKWAY WIDTH

The concept of a pedestrian lane has been used to analyze pedestrian flow, similar to analyzing a highway lane. However, the lane concept should not be used for pedestrian analysis, because studies have shown that pedestrians do not walk in organized lanes. The lane concept is meaningful only for determining how many persons can walk abreast in a given width of walkway, for example, in determining the minimum sidewalk width to permit two pedestrians to pass each other conveniently.

To avoid interference when two pedestrians pass each other, each should have at least 2.5 ft of walkway width (*1*). When pedestrians who know each other walk close together, each occupies a width of 2 ft, 2 in, allowing considerable likelihood of contact due to body sway. Lateral spacing less than this occurs only in the most crowded situations.

Clear walkway width

Clear walkway width refers to the portion of a walkway that can be used effectively for pedestrian movements. Moving pedestrians shy away from the curb and do not press closely against building walls. Therefore, this unused space must be discounted when analyzing a pedestrian facility. Also, a strip preempted by pedestrians standing near a building, or near physical obstructions, such as light poles, mail boxes, and parking meters, should be excluded.

The degree to which single obstructions, such as poles, signs, and hydrants, influence pedestrian movement and reduce effective walkway width is not extensively documented. Although a single point of obstruction would not reduce the effective width of an entire walkway, it would have an effect on its immediate vicinity.

PEDESTRIAN TYPE AND TRIP PURPOSE

The analysis of pedestrian flow generally is based on the mean, or average, walking speeds of groups of pedestrians. Within any group, or among groups, there can be considerable differences in flow characteristics due to trip purpose, land use, type of group, age, and other factors.

Pedestrians going to and from work, using the same facilities day after day, walk at higher speeds than shoppers, as shown in Exhibit 11-1. Older or very young persons tend to walk at a slower speed than other groups. Shoppers not only tend to walk slower than commuters, but also can decrease the effective walkway width by stopping to window shop and by carrying packages. The analyst should adjust for pedestrian behavior that deviates from the regular patterns represented in the basic speed, volume, and density curves.

Effective walkway width

DETERMINING EFFECTIVE WALKWAY WIDTH

Effective walkway width is the portion of a walkway that can be used effectively by pedestrians. Several types of walkway obstructions (see Exhibit 18-1 and Exhibit 18-2) tend to make pedestrians shy away. Effective walkway width is computed using Equation 18-1.

$$W_E = W_T - W_o \tag{18-1}$$

where

W_E = effective walkway width (ft),
W_T = total walkway width (ft), and
W_o = sum of widths and shy distances from obstructions on the walkway (ft).

EXHIBIT 18-1. WIDTH ADJUSTMENTS FOR FIXED OBSTACLES

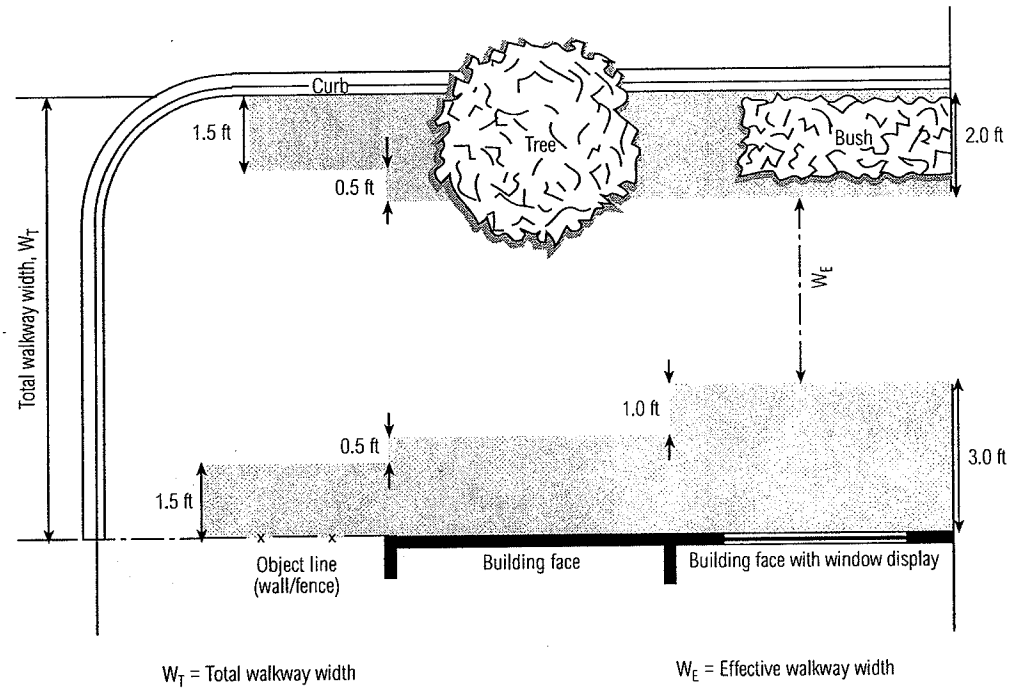

A schematic showing typical obstructions and the estimated width of walkway they preempt is provided in Exhibit 18-1. Exhibit 18-2 lists the width of walkway preempted by curbs, buildings, or fixed objects. The values in Exhibit 18-2 can be used when specific walkway configurations are not available.

The effective length of an occasional obstruction is assumed to be 5 times its effective width. The average effect of occasional obstructions such as trees and poles therefore should be obtained by multiplying their effective width by the ratio of their effective length to the average distance between them.

Also, at signalized intersection crossings, the analyst should observe if right-turning vehicles occupy part of the crosswalk during the crossing phase. If a significant portion of the crosswalk is not being used by pedestrians due to right-turning vehicles, effective crosswalk width can be computed by subtracting the appropriate time-space used by right-turning vehicles.

EXHIBIT 18-2. PREEMPTION OF WALKWAY WIDTH[a]

Obstacle	Approx. Width Preempted (ft)
Street Furniture	
Light pole	2.5–3.5
Traffic signal poles and boxes	3.0–4.0
Fire alarm boxes	2.5–3.5
Fire hydrants	2.5–3.0
Traffic signs	2.0–2.5
Parking meters	2.0
Mail boxes (1.7 ft x 1.7 ft)	3.2–3.7
Telephone booths (2.7 ft x 2.7 ft)	4.0
Waste baskets	3.0
Benches	5.0
Public Underground Access	
Subway stairs	5.5–7.0
Subway ventilation gratings (raised)	6.0+
Transformer vault ventilation gratings (raised)	5.0+
Landscaping	
Trees	2.0–4.0
Planter boxes	5.0
Commercial Uses	
Newsstands	4.0–13.0
Vending stands	variable
Advertising displays	variable
Store displays	variable
Sidewalk cafes (two rows of tables)	7.0
Building Protrusions	
Columns	2.5–3.0
Stoops	2.0–6.0
Cellar doors	5.0–7.0
Standpipe connections	1.0
Awning poles	2.5
Truck docks (trucks protruding)	variable
Garage entrance/exit	variable
Driveways	variable

Note:
a. To account for the avoidance distance between pedestrians and obstacles, 1.0 to 1.5 ft must be added to the preemption width for individual obstacles. Widths are from curb to edge of object, or building face to edge of object.
Source: Pushkarev and Zupan (2).

UNINTERRUPTED-FLOW PEDESTRIAN FACILITIES

Uninterrupted pedestrian facilities include both exclusive and shared pedestrian paths (both indoor and outdoor) designated for pedestrian use. These pedestrian facilities are unique because pedestrians do not experience any disruption except the interaction with other pedestrians and, on shared paths, with other nonmotorized modes of transportation. These procedures should be used with pedestrian walking speed, pedestrian start-up time, and pedestrian space requirements as described in Chapter 11.

Walkways and Sidewalks

Walkway and sidewalk paths are separated from motor vehicle traffic and typically do not allow bicycles or users other than pedestrians. These facilities are often constructed to serve pedestrians on city streets, at airports, in subways, and at bus terminals. These pedestrian facilities include straight sections of sidewalk, terminals,

City of Fayetteville Staff Review Form

City Council Agenda Items
and
Contracts, Leases or Agreements

7/6/2010
City Council Meeting Date
Agenda Items Only

Dara Sanders	Planning	Development Services
Submitted By	**Division**	**Department**

Action Required:

ADM 10-3568: (UDC CH. 177 LANDSCAPE REGULATIONS): Submitted by City Planning Staff. The request is to amend Chapters 177.04 of the Unified Development Code (UDC) to revise the perimeter landscaping requirements.

	$ -	
Cost of this request	Category / Project Budget	Program Category / Project Name
	$ -	
Account Number	Funds Used to Date	Program / Project Category Name
	$ -	
Project Number	Remaining Balance	Fund Name

Budgeted Item ☐ **Budget Adjustment Attached** ☐

Department Director — Date 06-10-2010

City Attorney — Date 6-14-10

Finance and Internal Services Director — Date 6-14-2010

Chief of Staff — Date 6-14-10

Mayor — Date 6/15/10

Previous Ordinance or Resolution # _____

Original Contract Date: _____

Original Contract Number: _____

Received in City Clerk's Office 06-11-10P04:48 RCVD

Received in Mayor's Office ENTERED 6/16/10

Comments:

Fayetteville
ARKANSAS
www.accessfayetteville.org

THE CITY OF FAYETTEVILLE, ARKANSAS
DEPARTMENT CORRESPONDENCE

CITY COUNCIL AGENDA MEMO

To: Mayor and City Council

Thru: Jeremy Pate, Development Services Director

From: Dara Sanders Current Planner

Date: June 11, 2010

Subject: UDC Chapter 177 Amendments (ADM 10-3568)

RECOMMENDATION

Staff recommends approval of the proposed amendments to Chapters 177 of the UDC. This item was heard at the May 10, 2010 Planning Commission meeting and forwarded to the City Council with a unanimous recommendation for approval (7-0-0).

BACKGROUND

The City of Fayetteville adopted Chapter 177, Landscape Regulations, in 2006 to preserve and enhance the natural beauty of Fayetteville and to reduce the environmental impact of development. City Planning staff and the Urban Forester have administered the regulations in Chapter 177 for almost four years and find that the shrub planting section under the perimeter landscaping requirements are inconsistent with and rarely achieve the intent and purpose - to provide a continuous vegetative screen that will minimize the visual impact of a parking lot from the public right-of-way. Chapter 177.04(D)(4) requires a property owner to plant a minimum of eight (8) shrubs for every one (1) street tree planted. However, depending upon the type of shrub, this specific requirement may not be sufficient to provide a continuous row of screening and to effectively buffer parking lots from the street. Most developments planted with screening shrubs in accordance with code have large gaps in between the shrubs, even after several years of growth.

Additionally, staff proposes to remove the requirement for 25 feet of greenspace in the I-540 Design Overlay District (DOD). In staff's opinion, the 15 feet of greenspace and 15% open space now required throughout the City as part of the Commercial Design Standards have proven to be effective and adequate in preserving pervious surface and providing a greenspace buffer between parking lots and streets.

PROPOSAL

Staff proposes to amend Chapter 177.04 of the UDC to revise the perimeter landscaping requirements as summarized below and attached in full to this staff report:

UDC	Subject	Proposed Changes
177.04(D)(2)(b)	Design Overlay District	Strike the requirement for 25 feet of greenspace in the DOD
177.04(4)(a)-(c)	Shrub Planting	Remove the minimum shrub number and spacing requirement. Insert the requirement for a "seamless row of hedging"

The ordinance amendments are highlighted and attached to the staff report.

BUDGET IMPACT

None.

ORDINANCE NO. _____

AN ORDINANCE AMENDING TITLE XV: UNIFIED DEVELOPMENT CODE OF THE CITY OF FAYETTEVILLE, TO AMEND CHAPTER 177: LANDSCAPE REGULATION IN ORDER TO MODIFY EXISTING REQUIREMENTS AND REGULATIONS THAT ADDRESS PERIMETER LANDSCAPING FOR DEVELOPMENT.

WHEREAS, the City of Fayetteville recognizes that the Unified Development Code should be revised to apply the requirement for 15 feet of greenspace to all commercial and office developments in the City; and

WHEREAS, certain sections of the City of Fayetteville Unified Development Code Chapter 177.04(D) Perimeter landscaping requirement do not work toward achieving the intent to screen parking lots from the view of the public right-of-way; and

WHEREAS, the City of Fayetteville recognizes that the Unified Development Code should be revised to eliminate unnecessarily repetitive information that is included in another chapter;

NOW, THEREFORE, BE IT ORDAINED BY THE CITY COUNCIL OF THE CITY OF FAYETTEVILLE, ARKANSAS:

Section 1. That the City Council of the City of Fayetteville, Arkansas hereby repeals §177.04(D)(2)(b) of the Unified Development Code and renumbers the sub-section accordingly.

Section 2. That the City Council of the City of Fayetteville, Arkansas hereby repeals §177.04(D)(4)(a) of the Unified Development Code and enacts a replacement §177.04(D)(4)(a) as follows:

"The requirement for a continuous planting of shrubs is intended to lessen the effect of extensive paving. Parking lots that require screening shall have shrubs that are spaced so as to create a seamless row of hedging. A minimum 50% of shrubs shall be evergreen."

Section 3. That the City Council of the City of Fayetteville, Arkansas hereby repeals §177.04(D)(4)(b) of the Unified Development Code and renumbers the sub-section accordingly.

PASSED and **APPROVED** this the ____ day of ____, 2010.

APPROVED:

By: _____
LIONELD JORDAN, Mayor

ATTEST:

By: _____
SONDRA SMITH, City Clerk

Fayetteville
ARKANSAS

PC Meeting of May 10, 2010

THE CITY OF FAYETTEVILLE, ARKANSAS

125 W. Mountain St.
Fayetteville, AR 72701
Telephone: (479) 575-8267

PLANNING DIVISION CORRESPONDENCE

TO:	Fayetteville Planning Commission
FROM:	Dara Sanders, Current Planner
THRU:	Jeremy Pate, Development Services Director
DATE:	~~May 6, 2010~~ *Updated May 11, 2010*

ADM 10-3568: Administrative Item (UDC AMENDMENT CH. 177 LANDSCAPE REGULATIONS): Submitted by CITY PLANNING STAFF for revisions to Fayetteville Unified Development Code, Chapter 177 Landscape Regulations. The proposed code changes clarify the specification for shrub plantings to screen parking lots from the street. Planner: Dara Sanders

Background and Proposal: The City of Fayetteville adopted Chapter 177, Landscape Regulations, in 2006 to preserve and enhance the natural beauty of Fayetteville and to reduce the environmental impact of development. City Planning staff and the Urban Forester have administered the regulations in Chapter 177 for almost four years and find that the shrub planting section under the perimeter landscaping requirements are inconsistent with and rarely achieve the intent and purpose - to provide a continuous vegetative screen that will minimize the visual impact of a parking lot from the public right-of-way. Chapter 177.04(D)(4) requires a property owner to plant a minimum of eight (8) shrubs for every one (1) street tree planted. However, depending upon the type of shrub, this specific requirement may not be sufficient to provide a continuous row of screening and to effectively buffer parking lots from the street. Most developments planted with screening shrubs in accordance with code have large gaps in between the shrubs, even after several years of growth.

Staff finds that requiring an exact number of shrubs under the current ordinance is counterproductive to the purpose of forming a continuous vegetative buffer. Therefore, staff proposes to remove the minimum number and to simply require that the shrubs form a "seamless row of hedging". The Urban Forester and the species list in the Landscape Manual will be relied upon to ensure that the spacing and size of shrubs at planting are the minimum needed to provide the desired hedgerow effect, which is dependent on the shrub species.

Summary: The proposal to amend sections of Chapter 177.04 Site Development and Parking Lot Landscape Standards is summarized below and attached in full to this staff report:

Chapter	Section	Description
177.04(D)(2)(b)	Landscape Regulations	- Strike the Design Overlay District requirement for 25 feet of green space. (a general clean-up that was overlooked in a previous code change)
177.04(D)(4)	Landscape Regulations	- Modify the language from "continuous rows" to "seamless row of hedging" and strike the specified number of shrubs. - Strike the spacing requirement.

The ordinance amendments are shown in highlight and ~~strikeout~~ and are attached to the staff report.

RECOMMENDATION

Staff recommends forwarding **ADM 10-3568** to the City Council with a recommendation for approval.

PLANNING COMMISSION ACTION: **yes Required**

Planning Commission Action: ☐ **Forwarded** ☐ **Tabled** ☐ **Denied**
Motion: Winston
Second: Chesser
Vote: 7-0-0
Meeting Date: May 10, 2010

UDC Amendments for Chapter 177: Landscape Regulations (Mark Up)

177.04 Site Development And Parking Lot Landscape Standards

(D) *Perimeter landscaping requirement.* Proposed development shall be landscaped meeting the following requirements:

(1) *Side and rear property lines.* All parking lots shall have five feet (5') of landscaped area between the property line and parking lot. The two foot (2') vehicle overhang option may be included to meet this requirement. Depending on the use and location, additional landscaped area and screening may be required along property lines.

(2) *Property lines adjoining street right-of-way.*

(a) *Landscape area required.* A fifteen (15) foot wide landscaped area shall be provided along the front property line exclusive of and adjacent to the Master Street Plan right-of-way. Points of access (entrance drives, exit drives) and sidewalks are allowed to cross the fifteen (15) foot landscaped area provided the integrity of the landscaped area is maintained.

(b) ~~*Design Overlay District.* Within the established boundary of the Design Overlay District, a twenty-five (25) foot wide landscaped area shall be provided along the front property line exclusive of the Master Street Plan right-of-way (§161.24). Points of access (entrance drives, exit drives) and sidewalks are allowed to cross the twenty-five (25) foot landscaped area provided the integrity of the landscaped area is maintained.~~

~~(c)~~ *Residential zones.* Except for permitted entrance drives, every development shall be landscaped for an equal and uniform width of 15 feet parallel to the front property line(s) street right-of-way. Single family residential uses shall be exempt from this requirement.

~~(d)~~ (c) *Nonresidential zones.* Except for permitted entrance drives, every development shall be landscaped for an equal and uniform width of 15 feet parallel to the front property line(s) street right-of-way. Properties developed with an urban streetscape, utilizing urban tree wells as defined herein, shall be exempt from this requirement.

~~(e)~~ (d) *Shade.* All tree planting locations shall attempt to achieve shade for parking lots, cars, benches, pedestrian walkways, etc., by utilizing aspect and locating trees along the south and west boundary of these areas.

~~(f)~~ (e) *Screening.* Parking lots containing five (5) or more spaces shall be screened from the public right-of-way and adjacent properties, where said parking areas are adjacent to residential zones, with shrubs and/or graded berms. If graded berms are used, shrubs are also required.

~~(g)~~ (f) *Perimeter planting location.* All plantings noted herein shall be installed within the required landscape area. Subject to approval by the Urban Forester, required trees and shrubs may be planted within the right-of-way or outside the required landscape area parallel to the street right-of-way only in extenuating circumstances.

(3) *Tree Planting.*

(a) Large species trees shall be planted in the required fifteen (15) foot landscaped area containing one (1) tree per thirty (30) linear feet along the front property line. Trees along the perimeter may be grouped to allow flexibility in design. The maximum allowed grouping may be up to twenty-five (25%) percent of the required number of street trees.

(b) Species selection shall be chosen from the approved list of trees for landscaping found in the appendices of the City of Fayetteville Landscape Manual. Alternate tree species selections may be approved by the Urban Forester. No more than 25% of trees planted to meet perimeter landscaping requirements may be evergreen.

(c) Planted trees shall have a two (2) inch caliper (diameter) measured six (6) inches above ground level at the time of planting.

(d) At the request of the developer, the Urban Forester may exempt specific areas from required tree planting where the terrain, existing trees or other physical limitations make the planting of new trees impracticable. In cases of existing overhead power lines, small trees shall be planted that will not interfere with the existing power lines.

DRAFT

Species selection shall be approved by the Urban Forester.

(4) *Shrub Planting.*

(a) ~~Parking lots adjacent to a street right-of-way shall have shrubs planted in continuous rows. A minimum of eight (8) shrubs shall be planted for every tree required in the landscape area adjacent to a right-of-way.~~ The requirement for a continuous planting of shrubs is intended to lessen the effect of extensive paving. ~~Groupings of shrubs are encouraged; however, a continuous planting will be required as well.~~ Parking lots that require screening shall have shrubs that are spaced so as to create a seamless row of hedging. A minimum 50% of shrubs shall be evergreen.

(b) ~~Planting locations of required shrubs shall be appropriately spaced between trees in either groups or continuous rows.~~

~~(c)~~ Shrub size at the time of planting shall be a minimum of three (3) gallon containers with an expected height of three (3) feet or more in a seamless row of hedging within two (2) years of installation.

DRAFT

(5) *Ground Cover Planting.* All landscape areas shall be re-vegetated with appropriate perennial groundcover. Prior to certificate of occupancy, all bare soil shall be adequately covered in accordance with the Unified Development Code.

City of Fayetteville Staff Review Form

City Council Agenda Items
and
Contracts, Leases or Agreements

7/6/2010
City Council Meeting Date
Agenda Items Only

Don Marr, Chief of Staff	Mayor's Administration	Chief of Staff
Submitted By	**Division**	**Department**

Action Required:

Ordinance to amend the Inter-local agreement of a Public Transit System known as Ozark Regional Transit Authority.

n/a	$ -	
Cost of this request	Category / Project Budget	Program Category / Project Name
	$ -	
Account Number	Funds Used to Date	Program / Project Category Name
	$ -	
Project Number	Remaining Balance	Fund Name

Budgeted Item ☐ **Budget Adjustment Attached** ☐

Department Director — Date: 6/7/10

City Attorney — Date: 6-8-10

Finance and Internal Services Director — Date: 6-9-2010

Chief of Staff — Date: 6-9-10

Mayor — Date: 6/9/10

Previous Ordinance or Resolution #

Original Contract Date:

Original Contract Number:

Received in City Clerk's Office — ENTERED 6-7-10 Kim

Received in Mayor's Office — ENTERED 6/8/10

Comments:

City Council Meeting Date:
July 6, 2010

City Council Agenda Memo

To: Mayor and Members of the City Council

From: Don Marr, Chief of Staff

Thru: Mayor Jordan

Date: June 18, 2010

Subject: Amended Inter-local Agreement of a Public Transit System Known as Ozark Transit Authority

---

Recommendation:

The City Staff and Administration recommend on behalf of the Mayor's office that the City Council of the City of Fayetteville, AR, pass an ordinance amendment to amend the inter-local Agreement of Public Transit System; known as Ozark Transit Authority.

Background:
The City of Fayetteville, AR was previously created in 2002 by the Arkansas counties of Washington, Benton, Madison and Carroll and the Arkansas cities of Fayetteville, Springdale, Rogers and Bentonville. The request is to amend the inter-local agreement to increase board continuity, stagger terms so the entire board doesn't turn over with newly elected administrations, and providing a clear understanding of the board make-up and how members are added. The detail of the amendments being offered are as follows:

1.) In Section 2 of the original ordinance, the recommendation removed language that any other incorporated city may become a member of the inter-local agreement at its own option and replaces it with the language that states, that any other incorporated city may become a member upon a majority vote of the Board of Ozark Transit Authority.
2.) In Section 3 of the original ordinance, the recommendation is to amend the agreement to state that the authority shall be governed by a board of directors consisting of one appointment from each of the county judges and City Mayors of the counties and cities mentioned in Section 2. It also states that terms of each appointment shall be for four (4) years after the initial appointments and the terms are set up on a staggered term basis. The staggered term rotation begins with 2 appointments that end on May 31st 2011, and each year thereafter until the entire eight (8) appointments have rotated terms by May 31, 2014.

3.) **A new Section 9 has been added that states that Any Mayor or County Judge who has the authority to appoint a board member under this agreement, shall also have the authority to remove said member without cause, and to appoint a replacement for the member to complete the term. This allows newly elected Mayors and County Judges to make appointments that are in alignment with their philosophies and administrations.**

The final change is wording, changing Article wording from Articles to Sections,

<u>Budget</u>:
There is no budgetary change or impact based on the amended inter-local agreement amendments.

ORDINANCE NO. _____

AN ORDINANCE APPROVING AN AMENDMENT TO THE INTERLOCAL AGREEMENT PROVIDING FOR PARTICIPATION OF THE CITY OF FAYETTEVILLE IN THE OZARK TRANSIT AUTHORITY

WHEREAS, the Ozark Transit Authority was created in 2002 by Washington, Benton, Carroll and Madison counties and the cities of Fayetteville, Springdale, Rogers and Bentonville; and

WHEREAS, certain amendments to the interlocal agreement creating the Authority are needed to increase board continuity, stagger terms of board members, clarify board make-up, and determine how board members are added.

NOW, THEREFORE, BE IT ORDAINED BY THE CITY COUNCIL OF THE CITY OF FAYETTEVILLE, ARKANSAS:

Section 1. That the City Council of the City of Fayetteville, Arkansas hereby approves the attached Amended Interlocal Agreement of a Public Transit System Known as Ozark Transit Authority and authorizes the Mayor to sign said agreement.

PASSED and APPROVED this 6th day of July, 2010.

APPROVED: ATTEST:

By: _____ By: _____

LIONELD JORDAN, Mayor **SONDRA E. SMITH**, City Clerk/Treasurer

AMENDED INTERLOCAL AGREEMENT OF A PUBLIC TRANSIT SYSTEM KNOWN AS OZARK TRANSIT AUTHORITY

WHEREAS, the Ozark Transit Authority was previously created in 2002 by the Arkansas counties of Washington, Benton, Madison, and Carroll, and the Arkansas cities of Springdale, Fayetteville, Rogers, and Bentonville;

WHEREAS, the Board of Directors of Ozark Transit Authority have recommended that the Interlocal Agreement entered into between the above named governing bodies be amended;

NOW, THEREFORE, it is agreed that the Interlocal Agreement is amended as follows (that which is underlined is added; that which is stricken through is deleted):

Section 1: A public transit authority is hereby created to be known as Ozark Transit Authority.

Section 2: The authority shall consist of the counties of Washington, Benton, Madison, and Carroll, and the cities of Springdale, Fayetteville, Rogers, and Bentonville. Any other incorporated city may become a member ~~at its option. Any unincorporated community may become a member~~ upon a majority vote of the Board of Ozark Transit Authority.

Section 3: The authority shall be governed by a board of directors consisting of one appointment from each of the county judges and mayors of the aforesaid counties and cities~~, or their representatives~~. Terms of each appointment shall be for four years after the initial appointment to allow for staggered terms as set out below:

Positions 1 and 2 will begin on the date of appointment and end May 31, 2011;
Positions 3 and 4 will begin on the date of appointment and end May 31, 2012;
Positions 5 and 6 will begin on the date of appointment and end May 31, 2013; and
Positions 7 and 8 will begin on the date of appointment and end May 31, 2014.

The county judges and mayors will conduct a drawing to determine the positions for which they will make appointments, with each county judge and each mayor making one appointment.

Section 4: No entity which is a part of the authority may be financially or otherwise obligated except upon specific approval of its governing body.

Section 5: Said authority shall have those powers and authority as set out in Ark. Code Ann. §14-334-101, *et. seq.*, commonly referred to as the Public Transit System Act.

Section 6: Any member may withdraw from said authority by a majority vote of its governing body upon six (6) months notice pursuant to Ark. Code Ann. §14-43-502.

~~Article~~ **Section 7:** In the event the authority should dissolve, after payment of its just debts, its assets shall be distributed pursuant to state and federal law. Unless and until dissolution occurs, the authority's existence shall be perpetual.

~~Article~~ **Section 8:** The system shall be financed through grants from the Federal Transit Authority administered through the Arkansas State Highway Department, through fares and special subscriptions, through such local monies as appropriated by the participating entities which are a party hereto, and through private grants.

NEW

Section 9: Any Mayor or County Judge who has the authority to appoint a board member under this agreement, shall also have the authority to remove said member without cause, and to appoint a replacement for the member to complete the term.

In no other way is the original Interlocal Agreement entered into between the parties amended or changed, except as specifically set out herein and the parties hereby approve all the amendments hereto, and reaffirm and republish all the portions of the original agreement that is not specifically amended herein.

Executed this _____ day of _____, 2010.

_____

_____

_____

_____

_____

_____

_____

_____

Agenda Session 6/29/10

Mayor Lioneld Jordan

City Attorney Kit Williams

City Clerk Sondra Smith

Aldermen

Ward 1 Position 1 – Adella Gray
Ward 1 Position 2 – Brenda Thiel
Ward 2 Position 1 – Kyle B. Cook
Ward 2 Position 2 – Matthew Petty
Ward 3 Position 1 – Robert K. Rhoads
Ward 3 Position 2 – Robert Ferrell
Ward 4 Position 1 – Shirley Lucas
Ward 4 Position 2 – Sarah E. Lewis

Tentative Agenda
City of Fayetteville Arkansas
City Council Meeting
July 6, 2010

A meeting of the Fayetteville City Council will be held on July 6, 2010 at 6:00 PM in Room 219 of the City Administration Building located at 113 West Mountain Street, Fayetteville, Arkansas.

Call to Order

Roll Call

Pledge of Allegiance

Agenda Session Presentations:

1. Sales Tax Discussion – Don Marr

Mayor's Announcements, Proclamations and Recognitions:

Presentations, Reports and Discussion Items:

Agenda Additions:

A. Consent:

1. Approval of the June 15, 2010 City Council meeting minutes.

2. **Woolsey Aviation, Inc. D/B/A Million Air of Fayetteville:** A resolution authorizing and approving an airport use and lease agreement for fixed base operations with Woolsey Aviation, Inc. D/B/A Million Air of Fayetteville in the amount of $29,560.20.

3. **Ball Plaza Holdings, LLC:** A resolution approving a lease with Ball Plaza Holdings, LLC to rent space in the E.J. Ball Building to house the City of Fayetteville Information Technology Division's server room for the annual amount of $18,504.00.

NB#1 4. **Street Name Change:** A resolution renaming a section of N. Shiloh Drive to N. Farm Credit Drive due to street realignment.

5. **Sweetser Construction, Inc.:** A resolution awarding bid and approving a contract with Sweetser Construction, Inc. in the amount of $285,811.00 for the construction of repairs to the Lake Wilson spillway, and approving a 15% project contingency.

6. **Garver, LLC Amendment No. 1:** A resolution approving contract Amendment No. 1 with Garver, LLC in the amount of $79,400.00 for construction phase services related to Lake Wilson Spillway Improvements.

7. **Ground Zero Construction, Inc.:** A resolution awarding bid and approving a contract with Ground Zero Construction, Inc. in the amount of $64,750.00 for construction of Hamestring Creek Tributary restoration through the Red Oak Park Supplemental Drainage Improvements Project, and approving a 15% project contingency.

Need new resolution

8. ~~Amend~~ **Police Department Policies:** A resolution approving ~~amendments to~~ Fayetteville Police Department Policies 33.1 Training; 41.2.7 Department Response to Mentally Ill Subjects; and 44.2.4 School Resource Officers.

B. Unfinished Business:

1. **RZN 10-3566 (932 Garland):** An ordinance rezoning that property described in rezoning petition RZN 10-3566, for approximately 0.84 acres, located at 932 Garland Avenue from R-PZD, Residential Planned Zoning District 06-2256 (932 Garland), to R-O, Residential Office and RMF-40, Residential Multi-family, 40 units per acre. *This ordinance was left on the Second Reading at the June 15, 2010 City Council meeting.*

Left on the Second Reading.

2. **ADM 09-3273 (Business Registry and License Program):** An ordinance to amend the Fayetteville code by enacting a chapter to create a business registry and to require annual business licenses for all businesses and non-profits with locations within Fayetteville. *This ordinance was left on the Second Reading at the June 15, 2010 City Council meeting.*

Left on the Second Reading.

3. **Amend Chapter 97 Parks and Recreation:** An ordinance to amend Chapter 97 Parks and Recreation of the Code of Fayetteville to permit and regulate signs recognizing donor contributions. *This ordinance was left on the Second Reading at the June 15, 2010 City Council meeting.*

Left on the Second Reading.

4. **Johnson Enhanced Water Service Contract:** A resolution to approve a 15 year contract for enhanced water service between Fayetteville and Johnson. *This resolution was tabled at the June 15, 2010 City Council meeting to the July 6, 2010 City Council meeting.*

5. **Johnson Sanitary Sewer Service Contract:** A resolution to approve a 15 year contract for sanitary sewer service between Fayetteville and Johnson. *This resolution was tabled at the June 15, 2010 City Council meeting to the July 6, 2010 City Council meeting.*

C. Public Hearing:

1. **Raze and Removal 890 S. Washington Ave.:** A resolution ordering the razing and removal of a dilapidated and unsafe structure owned by Ronald and Betty Ramirez located at 890 S. Washington Avenue in the City of Fayetteville, Arkansas and approving a budget adjustment of $4,149.00.

D. New Business:

1. **City of Johnson Agreement:** A resolution to approve an agreement with the City of Johnson concerning payment of $35,000.00 to Johnson, Johnson conveying .77 acres to Fayetteville, the cities mutual assistance in obtaining right-of-way for the Van Asche extension, budget adjustment of $35,000.00 and other purposes.

2. **Amend Chapter 33: Departments, Boards, Commissions, and Authorities:** An ordinance to amend Chapter 33 Department, Boards, Commissions and Authorities by enacting Title XXI, Fayetteville Arts Council into the Fayetteville Code.

3. **Amend Chapters 169: Physical Alteration of Land and Chapter 170: Stormwater Management, Drainage and Erosion Control:** An ordinance amending Chapter 169: Physical Alteration of Land and Chapter 170: Stormwater Management, Drainage and Erosion Control of Title XV of the Code of Fayetteville (Unified Development Code), to clarify stabilization requirements, require phased construction for sites larger than 20 acres, clarify re-vegetation requirements, clarify requirements for cut and fill slopes and retaining walls, define maintenance responsibility for stormwater management systems, restrict location of dirt and topsoil storage and define stabilization practices for dirt and topsoil storage, define a qualified inspector for erosion and sediment control best management practices, and require site plans for one and two family residences to contain a plan for erosion and sediment control and final on-site drainage.

4. **Amend Chapter 171: Streets and Sidewalks:** An ordinance amending the Unified Development Code Chapter 171: Streets and Sidewalks to amend and clarify sidewalk and driveway approach construction standards.

5. **Amend Chapter 177: Landscape Regulations:** An ordinance amending Title XV: Unified Development Code of the City of Fayetteville, to amend Chapter 177: Landscape Regulations in order to modify existing requirements and regulations that address perimeter landscaping for development.

6. **Ozark Transit Authority Interlocal Agreement:** An ordinance approving an amendment to the Interlocal Agreement providing for participation of the City of Fayetteville in the Ozark Transit Authority.

Announcements:

Adjournment:

NOTICE TO MEMBERS OF THE AUDIENCE

All interested parties may appear and be heard before the City Council. If you wish to address the City Council on an agenda item please queue behind the podium when the Chair asks for public comment. Once the chair recognizes you, go to the podium and give your name and address. Address your comments to the Chair, who is the presiding officer. The Chair will direct your comments to the appropriate elected official, staff member or others for response. Please keep your comments brief, to the point and relevant to the agenda item being considered so that everyone has a chance to speak.

Interpreters or TDD for hearing impaired are available for all City Council meetings, a 72 hour advance notice is required. For further information or to request an interpreter, please call 575-8330.

As a courtesy please turn off all cell phones and pagers.

A copy of the City Council agenda is available at accessfayetteville.org or in the office of the City Clerk, 113 West Mountain, Fayetteville, Arkansas.

Pre-Agenda Meeting 6-23-10

Mayor Lioneld Jordan

City Attorney Kit Williams

City Clerk Sondra Smith

Aldermen

Ward 1 Position 1 – Adella Gray
Ward 1 Position 2 – Brenda Thiel
Ward 2 Position 1 – Kyle B. Cook
Ward 2 Position 2 – Matthew Petty
Ward 3 Position 1 – Robert K. Rhoads
Ward 3 Position 2 – Robert Ferrell
Ward 4 Position 1 – Shirley Lucas
Ward 4 Position 2 – Sarah E. Lewis

Tentative Agenda
City of Fayetteville Arkansas
City Council Meeting
July 6, 2010

A meeting of the Fayetteville City Council will be held on July 6, 2010 at 6:00 PM in Room 219 of the City Administration Building located at 113 West Mountain Street, Fayetteville, Arkansas.

Call to Order

Roll Call

Pledge of Allegiance

Agenda Session Presentations: Sales Tax Discussion – Don Marr

Mayor's Announcements, Proclamations and Recognitions:

Presentations, Reports and Discussion Items:

Agenda Additions:

A. Consent:

1. Approval of the June 15, 2010 City Council meeting minutes.

2. **Woolsey Aviation, Inc. D/B/A Million Air of Fayetteville:** A resolution authorizing and approving an airport use and lease agreement for fixed base operations with Woolsey Aviation, Inc. D/B/A Million Air of Fayetteville in the amount of $29,560.20.

3. **Ball Plaza Holdings, LLC:** A resolution approving a lease with Ball Plaza Holdings, LLC to rent space in the E.J. Ball Building to house the City of Fayetteville Information Technology Division's server room for the annual amount of $18,504.00.

4. **Street Name Change:** A resolution renaming a section of N. Shiloh Drive to N. Farm Credit Drive due to street realignment.

Change Resolution

5. **Sweetser Construction, Inc.:** A resolution awarding bid and approving a contract with Sweetser Construction, Inc. ~~of~~ repairs to the Lake Wilson spillway, and approving a 15% project contingency. in the amount of $285,811.00 for the Construction of

6. **Garver, LLC Amendment No. 1:** A resolution approving contract Amendment No. 1 with Garver, LLC in the amount of $79,400.00 for construction phase services related to Lake Wilson Spillway Improvements.

7. **Ground Zero Construction, Inc.:** A resolution awarding bid and approving a contract with Ground Zero Construction, Inc. in the amount of $64,750.00 for construction of Hamestring Creek Tributary restoration through the Red Oak Park Supplemental Drainage Improvements Project, and approving a 15% project contingency.

8. **Amend Police Department Policies:** A resolution

B. Unfinished Business:

1. **RZN 10-3566 (932 Garland):** An ordinance rezoning that property described in rezoning petition RZN 10-3566, for approximately 0.84 acres, located at 932 Garland Avenue from R-PZD, Residential Planned Zoning District 06-2256 (932 Garland), to R-O, Residential Office and RMF-40, Residential Multi-family, 40 units per acre. *This ordinance was left on the Second Reading at the June 15, 2010 City Council meeting.*

   Left on the Second Reading.

2. **ADM 09-3273 (Business Registry and License Program):** An ordinance to amend the Fayetteville code by enacting a chapter to create a business registry and to require annual business licenses for all businesses and non-profits with locations within Fayetteville. *This ordinance was left on the Second Reading at the June 15, 2010 City Council meeting.*

   Left on the Second Reading.

3. **Amend Chapter 97 Parks and Recreation:** An ordinance to amend Chapter 97 Parks and Recreation of the Code of Fayetteville to permit and regulate signs recognizing donor contributions. *This ordinance was left on the Second Reading at the June 15, 2010 City Council meeting.*

   Left on the Second Reading.

4. **Johnson Enhanced Water Service Contract:** A resolution to approve a 15 year contract for enhanced water service between Fayetteville and Johnson. *This resolution was tabled at the June 15, 2010 City Council meeting to the July 6, 2010 City Council meeting.*

5. **Johnson Sanitary Sewer Service Contract:** A resolution to approve a 15 year contract for sanitary sewer service between Fayetteville and Johnson. *This resolution was tabled at the June 15, 2010 City Council meeting to the July 6, 2010 City Council meeting.*

C. Public Hearing:

1. **Raze and Removal 890 S. Washington Ave.:** A resolution ordering the razing and removal of a dilapidated and unsafe structure owned by Ronald and Betty Ramirez located at 890 S. Washington Avenue in the City of Fayetteville, Arkansas and approving a budget adjustment of $4,149.00.

D. New Business:

1. **City of Johnson Agreement:** A resolution to approve an agreement with the City of Johnson concerning payment of $35,000.00 to Johnson, Johnson conveying .77 acres to Fayetteville, the cities mutual assistance in obtaining right-of-way for the Van Asche extension, budget adjustment of $35,000.00 and other purposes.

2. **Amend Chapter 33: Departments, Boards, Commissions, and Authorities:** An ordinance to amend Chapter 33 Department, Boards, Commissions and Authorities by enacting Title XXI, Fayetteville Arts Council into the Fayetteville Code.

3. **Amend Chapters 169: Physical Alteration of Land and Chapter 170: Stormwater Management, Drainage and Erosion Control:** An ordinance amending Chapter 169: Physical Alteration of Land and Chapter 170: Stormwater Management, Drainage and Erosion Control of Title XV of the Code of Fayetteville (Unified Development Code), to clarify stabilization requirements, require phased construction for sites larger than 20 acres, clarify re-vegetation requirements, clarify requirements for cut and fill slopes and retaining walls, define maintenance responsibility for stormwater management systems, restrict location of dirt and topsoil storage and define stabilization practices for dirt and topsoil storage, define a qualified inspector for erosion and sediment control best management practices, and require site plans for one and two family residences to contain a plan for erosion and sediment control and final on-site drainage.

4. **Amend Chapter 171: Streets and Sidewalks:** An ordinance amending the Unified Development Code Chapter 171: Streets and Sidewalks to amend and clarify sidewalk and driveway approach construction standards.

5. **Amend Chapter 177: Landscape Regulations:** An ordinance amending Title XV: Unified Development Code of the City of Fayetteville, to amend Chapter 177: Landscape Regulations in order to modify existing requirements and regulations that address perimeter landscaping for development.

6. **Ozark Transit Authority Interlocal Agreement:** An ordinance approving an amendment to the Interlocal Agreement providing for participation of the City of Fayetteville in the Ozark Transit Authority.

Announcements:

Adjournment:

NOTICE TO MEMBERS OF THE AUDIENCE

All interested parties may appear and be heard before the City Council. If you wish to address the City Council on an agenda item please queue behind the podium when the Chair asks for public comment. Once the chair recognizes you, go to the podium and give your name and address. Address your comments to the Chair, who is the presiding officer. The Chair will direct your comments to the appropriate elected official, staff member or others for response. Please keep your comments brief, to the point and relevant to the agenda item being considered so that everyone has a chance to speak.

Interpreters or TDD for hearing impaired are available for all City Council meetings, a 72 hour advance notice is required. For further information or to request an interpreter, please call 575-8330.

As a courtesy please turn off all cell phones and pagers.

A copy of the City Council agenda is available at accessfayetteville.org or in the office of the City Clerk, 113 West Mountain, Fayetteville, Arkansas.